COUNTY OF SANTA BARBARA

CHAPTER 14

GRADING ORDINANCE 4477

ADOPTED REFERENCE 3

CALIFORNIA STORMWATER BEST MANAGEMENT PRACTICE HANDBOOKS

Municipal
Industrial/Commercial
Construction Activity

March 1993

California Storm Water Best Management Practice Handbooks

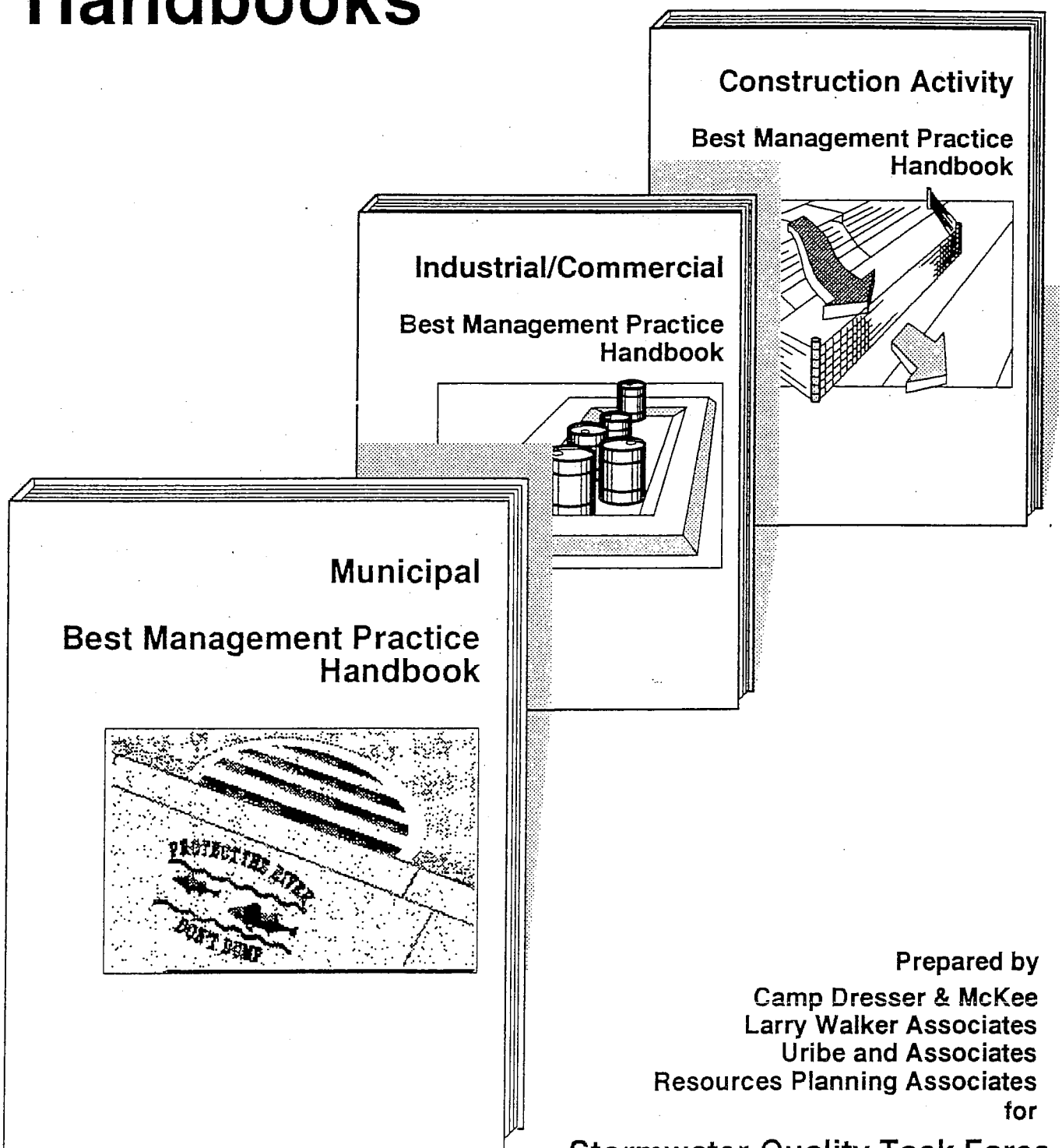

Prepared by
Camp Dresser & McKee
Larry Walker Associates
Uribe and Associates
Resources Planning Associates
for
Stormwater Quality Task Force

DISCLAIMER

The statements and conclusions of this Handbook are those of the Grantee and not necessarily those of the State of California. The mention of commercial products, their source, or their use in connection with material reported herein is not to be construed as either an actual or implied endorsement of such products.

This Handbook was produced and published by the Storm Water Quality Task Force, an advisory body of municipal agencies regulated by the storm water program. This Handbook is not a publication of the State Water Resources Control Board or any Regional Water Quality Control Board, and none of these Boards has specifically endorsed the contents thereof. The purpose of this Handbook is to assist the members of the Task Force and other dischargers subject to storm water permits, in attaining compliance with such permits.

ABSTRACT

The Construction Best Management Practices (BMPs) Handbook presents specific guidance on selecting best management practices for reducing pollutants in storm water discharges from construction activities. The primary audience of the handbook is the owners/developers of the construction sites that are required to obtain a State of California NPDES general permit for storm water discharges. The handbook outlines a procedure and provides worksheets for preparing a Storm Water Pollution Prevention Plan (SWPPP) as required under the general permit and for selecting BMPs that become a part of the SWPPP.

Detailed fact sheets are provided for the BMPs which include information regarding where they should be applied, what are the targeted pollutants of the BMP, design criteria (when applicable), and examples of their application. The handbook also gives guidelines for measuring BMP performance.

FOREWORD

In 1972, the Federal Water Pollution Control Act (also referred to as the Clean Water Act [CWA]) was amended to provide that the discharge of pollutants to waters of the United States from storm water is effectively prohibited, unless the discharge is in compliance with a National Pollutant Discharge Elimination (NPDES) permit. The 1987 amendments to the CWA added Section 402(p) which established a framework for regulating municipal, industrial, and construction storm water discharges under the NPDES program. In California, these permits are issued through the State Water Resources Control Board (SWRCB) and the nine Regional Water Quality Control Boards (RWQCB). In general, municipalities with a population of over 100,000, industries which have been identified by the Environmental Protection Agency to be a probable source of storm water pollutants, and construction projects that disturb more than five acres must obtain an NPDES permit.

The SWRCB and California members of the American Public Works Association (APWA), recognizing the complex issues involved with developing and implementing an NPDES permit system from storm water discharges, formed the Storm Water Quality Task Force to work as a team to develop a state regulatory program that complies with federal requirements, addresses California's unique demography, topography and climatology, and is affordable for the permittee. The Task Force, in turn, identified the need to have a State handbook to guide permittees in selecting Best Management Practices (BMPs) to reduce pollutants in storm water discharges. This series of Storm Water Best Management Practices Handbooks was funded by members of the Task Force and is directed specifically at developing and implementing storm water quality management programs in California.

The Handbook consists of three volumes:

- Volume 1: Municipal BMP Handbook - Addresses storm water quality management for most municipal activities, particularly those required under the NPDES municipal permit program.

- Volume 2: Commercial/Industrial BMP Handbook - Addresses storm water quality management for facilities that are (or will eventually be) covered by a NPDES general permit for industrial activities.

- Volume 3: Construction BMP Handbook - Addresses erosion control and other storm water quality management concerns required under a NPDES general permit for construction activities.

Each handbook is comprised of six chapters. Chapter 1 describes the pertinent regulations regarding the NPDES permit and defines who must obtain a permit. Chapter 2 describes how to develop a Storm Water Management Program or Storm Water Pollution Prevention Plan, while Chapter 3 provides guidance on the selection of BMPs for the plan. Chapters 4 and 5 describe the details of individual BMPs. Chapter 6 gives guidelines for measuring BMP performance. While the handbooks are meant to provide guidance to regulators and permittees, it should be understood that any final interpretation of the regulations will be done by the appropriate Regional Water Quality Control Board.

ACKNOWLEDGEMENTS

This Handbook was prepared under the direction of Dr. Larry Roesner, Officer-in-Charge, Camp Dresser & McKee Inc. (CDM) and Malcolm Walker, Project Manager, Larry Walker Associates (LWA). Principal authors were John Aldrich, CDM; Geoff Brosseau, Uribe & Associates; and Dr. Gary Minton, Resource Planning Associates. In addition Dr. Robert Brashear, Ed Glass, and Mike McKay of CDM; and Dr. Kenneth Kerri of California State University, Sacramento contributed portions of the handbook. The assistance of Carol Pace, Eric Zeigler and Charlene Huffaker (LWA) is especially appreciated and acknowledged.

Preparation of this Handbook was jointly funded by the California State Water Resources Control Board (SWRCB) through a 319(h) Nonpoint Source grant and contributing funds from various public agencies represented on the Storm Water Quality Task Force. The contributing agencies include:

Alameda County Public Works Agency

Fresno Metropolitan Flood Control District

City of Los Angeles

Los Angeles County Department of Public Works

Riverside County Flood Control and Water Conservation District

County of San Bernardino Environmental Public Work Agency

City of San Diego

Contra Costa County Flood Control

Orange County Storm Water Program

Santa Clara Valley Water District

City of Modesto

City of Sacramento

Sacramento County Water Resources Division

City of Monterey

Placer County Flood Control and Water Conservation District

Project Officer was Jack Lindley of Alameda County Public Works Agency and the State Contract Officer was Sid Taylor assisted by Marla Lafer of the SWRCB.

The following individuals served on a Technical Advisory Committee during the development of the document and provided valuable information and substantive suggestions for improving the document. Their assistance is greatly appreciated.

Municipal Handbook

Alice Tulloch
City of Modesto

Richard Boon
Orange County Environmental Management Agency

Dave Brent
City of Sacramento

Industrial Handbook

Larry Appleton
Kaiser Sand & Gravel

Michael Krone
Pacific Gas & Electrical Company

Tom Cooper
Lockheed Missile & Space Company

Construction Handbook

Richard Watson
Mission Viejo Company

James Hunter and Curt Smith
San Diego Construction Industry Federation

Bob Downey
Associated General Contractors of California, Inc.

Regulatory

Tom Mumley
Regional Water Quality Control Board, San Francisco Bay

In addition, special acknowledgement is provided to Doug Harrison, past chairperson of the Storm Water Quality Task Force, who, during his tenure, guided the conception and development of the handbook. Finally, we would like to acknowledge Pacific Gas and Electric for providing contributions to offset the publication cost of these handbooks.

CONSTRUCTION HANDBOOK

TABLE OF CONTENTS

PAGE

DISCLAIMER i
ABSTRACT ii
FOREWORD iii
ACKNOWLEDGEMENTS iv
TABLE OF CONTENTS vi

1. INTRODUCTION

Purpose and Scope of The Handbook . . . . . 1 - 1
Users of The Handbook . . . . . 1 - 2
Organization of The Handbook . . . . . 1 - 2
Definitions . . . . . 1 - 2
Construction Sites and Their Impacts on Water Quality . . . . . 1 - 2
Erosion and Sedimentation Processes . . . . . 1 - 3
Impacts of Erosion and Sedimentation . . . . . 1 - 5
Factors Influencing Erosion . . . . . 1 - 5
Other Impacts of Construction Activities . . . . . 1 - 6
Nutrients . . . . . 1 - 6
Trace Metals . . . . . 1 - 6
Pesticides . . . . . 1 - 6
Other Toxic Chemicals . . . . . 1 - 6
Miscellaneous Wastes . . . . . 1 - 6
Allowable Non-Storm Water Discharges . . . . . 1 - 8
Storm Water Programs . . . . . 1 - 8
Federal NPDES Program . . . . . 1 - 8
State NPDES Program . . . . . 1 - 8
Municipal NPDES Program . . . . . 1 - 8
Other State and Local Programs . . . . . 1 - 9
References . . . . . 1 - 13

2. HOW TO PREPARE A STORM WATER POLLUTION PREVENTION PLAN

Introduction . . . . . 2 - 1
Planning Phase . . . . . 2 - 3
Assess Site Conditions . . . . . 2 - 3
Develop a Base Map(s) . . . . . 2 - 3
Select Post-Construction BMPs . . . . . 2 - 5
Establish Maintenance Agreements . . . . . 2 - 5
Design Phase . . . . . 2 - 6
Prepare Project Site Plan . . . . . 2 - 6
Define BMP Objectives . . . . . 2 - 7

Construction Phase . . . . . 2 - 9
Bidding and Mobilization . . . . . 2 - 9
Train Personnel . . . . . 2 - 13
Construction Operations . . . . . 2 - 14
Complete Construction . . . . . 2 - 14

3. **BMP SELECTION**
Overview . . . . . 3 - 1
Define BMP Objectives . . . . . 3 - 1
Identify BMP Categories . . . . . 3 - 3
Selecting BMPs for Contractor Activities . . . . . 3 - 4
Selecting BMPs for Erosion and Sediment Control . . . . . 3 - 6
Minimize Disturbed Areas . . . . . 3 - 6
Stabilize Disturbed Areas . . . . . 3 - 7
Protect Slopes and Channels . . . . . 3 - 8
Control Site Perimeter . . . . . 3 - 8
Control Internal Erosion . . . . . 3 - 10
Selection of Post-Construction BMPs . . . . . 3 - 11
Source Control BMPs . . . . . 3 - 11
Treatment Control BMPs . . . . . 3 - 11

4. **BMPs FOR CONTRACTOR ACTIVITIES**
Introduction . . . . . 4 - 1
CA1 Dewatering Operations . . . . . 4 - 3
CA2 Paving Operations . . . . . 4 - 5
CA3 Structure Construction and Painting . . . . . 4 - 7
CA10 Material Delivery and Storage . . . . . 4 - 9
CA11 Material . . . . . 4 - 11
CA12 Spill Prevention and Control . . . . . 4 - 13
CA20 Solid Waste Management . . . . . 4 - 15
CA21 Hazardous Waste Management . . . . . 4 - 17
CA22 Contaminated Soil Management . . . . . 4 - 19
CA23 Concrete Waste Management . . . . . 4 - 21
CA24 Sanitary/Septic Waste Management . . . . . 4 - 23
CA30 Vehicle and Equipment Cleaning . . . . . 4 - 24
CA31 Vehicle and Equipment Fueling . . . . . 4 - 25
CA32 Vehicle and Equipment Maintenance . . . . . 4 - 26
CA40 Employee/Subcontractor Training . . . . . 4 - 28

5. **BMPs FOR EROSION AND SEDIMENTATION CONTROL**
Introduction . . . . . 5 - 1
ESC1 Scheduling . . . . . 5 - 5
ESC2 Preservation of Existing Vegetation . . . . . 5 - 7
ESC10 Seeding and Planting . . . . . 5 - 10
ESC11 Mulching . . . . . 5 - 16
ESC20 Geotextiles and Mats . . . . . 5 - 19

ESC21 Dust Control . . . . . 5 - 25
ESC22 Temporary Stream Crossing . . . . . 5 - 30
ESC23 Construction Road Stabilization . . . . . 5 - 35
ESC24 Stabilized Construction Entrance . . . . . 5 - 37
ESC30 Earth Dike . . . . . 5 - 40
ESC31 Temporary Drains and Swales . . . . . 5 - 44
ESC32 Slope Drain . . . . . 5 - 47
ESC40 Outlet Protection . . . . . 5 - 55
ESC41 Check Dams . . . . . 5 - 56
ESC42 Slope Roughening/Terracing . . . . . 5 - 59
ESC50 Silt Fence . . . . . 5 - 62
ESC51 Straw Bale Barrier . . . . . 5 - 67
ESC52 Sand Bag Barrier . . . . . 5 - 71
ESC53 Brush or Rock Filter . . . . . 5 - 74
ESC54 Storm Drain Inlet Protection . . . . . 5 - 79
ESC55 Sediment Trap . . . . . 5 - 87
ESC56 Sediment Basin . . . . . 5 - 90

6. MONITORING
Introduction . . . . . 6 - 1
Site Inspections . . . . . 6 - 1
Certification of Compliance . . . . . 6 - 1
BMPs Monitoring . . . . . 6 - 1
Record Keeping . . . . . 6 - 3
SWPPP Review and Modifications . . . . . 6 - 3

APPENDICES
A STATE OF CALIFORNIA GENERAL CONSTRUCTION ACTIVITY STORM WATER PERMIT
B SAMPLE STORM WATER POLLUTION PREVENTION PLAN
C GLOSSARY
D LIST OF ACRONYMS

1. INTRODUCTION

Storm water runoff is part of a natural hydrologic process. However, human activities, including the disturbance of land from construction activities, can alter natural drainage patterns, adding pollutants to rivers, lakes, and streams. An increase in compacted and impervious surfaces increases both the volume of surface runoff, the peak rate of flow, and decreases groundwater recharge. Consequently, improperly managed storm water runoff can be a significant source of water pollution, causing declines in fisheries, habitat disruption, restrictions on swimming, and limiting our ability to enjoy many of the other benefits that water provides (USEPA, 1992).

For many years the effort to control the discharge of storm water has focused on quantity (e.g. flood control), and to a limited extent, on the quality of storm water (e.g. sediment and erosion control). However, in recent years awareness of the need to protect and preserve natural habitats and improve water quality has increased. With this awareness Federal, State and local programs have been established to pursue the ultimate goal of reducing the impacts of storm water discharges to our water ways. After October 1, 1992, construction activities must be covered by a National Pollutant Discharge Elimination System (NPDES) permit (SWRCB, 1992). **Failure to comply with these requirements may result in a fine of up to $25,000 per day of violation and possible imprisonment.**

The primary objectives of the NPDES storm water permit for construction activities are to:

- Reduce excessive erosion potential
- Minimize excessive sedimentation
- Prevent other materials used at a construction site from causing off site contamination
- Eliminate non-storm water discharges from the construction sites
- Install appropriate measures to reduce impacts on waterways from the finished project, and provide a commitment that these measures will be maintained.
- Establish maintenance commitments on post-construction sites.

PURPOSE AND SCOPE OF THE HANDBOOK

The purpose of this handbook is to provide guidance for selecting and implementing best management practices (BMPs) for construction activities. As will be discussed in this handbook, State and Federal programs require *owners* of construction sites to prepare storm water pollution prevention plans (SWPPPs) which includes the identification and implementation of various BMPs. It is not the intent of this handbook to dictate the actual BMPs (as this will be done by the permittee), but rather to provide the framework for preparing SWPPPs and selecting appropriate BMPs. It is intended that portions of this handbook be incorporated into SWPPP if modified to meet specific project conditions.

In addition, the use of the handbook does not ensure that the user will be in compliance with the requirements of its NPDES permit. Such compliance can only be provided through a review and concurrence of the appropriate Regional Water Quality Control Board.

This handbook does not describe local requirements for erosion and sediment control for storm water management. Although it is expected that the handbook will assist the users in complying with local requirements, you should consult with local authorities for their requirements.

USERS OF THE HANDBOOK

A number of people will find this handbook helpful. The primary audience is the property owners, developers, contractors, engineers, and public agencies who are involved in construction and land disturbance. Municipal departments that oversee these activities will also find this handbook useful.

ORGANIZATION OF THE HANDBOOK

The overall goal of the storm water program is to reduce the impacts of storm water discharges on receiving waters. This handbook is organized to assist the user in developing and implementing such a program. The handbook explains:

- Why is storm water management needed? (Chapter 1)
- What is a SWPPP and how do you prepare one? (Chapter 2)
- What are best management practices, and how do you select them? (Chapter 3)
- What BMPs are available and how are they used? (Chapter 4 and 5)
- How do you monitor BMPs performance? (Chapter 6)

DEFINITIONS

Many of the common terms used in the storm water program are defined in the Glossary (Appendix C). However, the user will continually encounter the following terms:

- *NPDES Construction General Permit for Storm Water Discharges*. NPDES is an acronym for National Pollutant Discharge Elimination System. NPDES is the national program for administering and regulating discharges to receiving waters according to the Clean Water Act (CWA). In California, the State Water Resources Control Board (SWRCB) has issued a general permit for storm water discharges associated with construction activities statewide (except for the Lake Tahoe Basin and Indian lands, which are covered by separate permits, see Appendix A).
- *Notice of Intent (NOI)* is a formal notice to the SWRCB submitted by the owner/ developer that a construction project is about to begin. The NOI provides information on the owner, location, type of project, and certifies that the permittee will comply with conditions of the construction general permit. The NOI is not a permit application and no approval is required.
- *The Storm Water Pollution Prevention Plan* is a report that includes site map(s), an identification of construction/ contractor activities that could cause pollutants in the storm water, and a description of measures or practices to control these pollutants. The SWPPP must be prepared and implemented before construction begins.
- *A Best Management Practice (BMP)* is defined as any program, technology, process, siting criteria, operating method, measure, or device which controls, prevents, removes, or reduces pollution.

CONSTRUCTION SITES AND THEIR IMPACTS ON WATER QUALITY

Excessive erosion and sedimentation caused by construction activities is dependent upon climatic and site conditions, as well as the type of construction activity taking place. Sediment which results from the excessive erosion of disturbed soils is the primary pollutant of concern. However, other pollutants of concern include metals, nutrients, soil additives, pesticides, construction chemicals, and miscellaneous waste from construction sites. Consequently the development of a comprehensive storm water management

program to reduce pollutants from a construction site requires a basic understanding of the erosion and sedimentation processes and the factors that influence them as well as an understanding of how other construction activities impact water quality.

EROSION AND SEDIMENTATION PROCESS

Soil erosion is the process by which soil particles are removed from the land surface, by wind, water or gravity. Most natural erosion occurs at slow rates; however, the rate of erosion increases when land is cleared or altered and left disturbed.

Sedimentation is defined as the settling out of soil particles transported by water. Sedimentation occurs when the velocity of water in which soil particles are suspended is slowed sufficiently to allow particles to settle out. Larger particles, such as gravel and sand, settle more rapidly than fine particles such as silt and clay. Sedimentation occurs after erosion has taken place. Effective construction site management first minimizes excessive soil erosion by keeping the soil stabilized as long as possible, and second directs runoff from remaining disturbed areas to locations where sediments are removed prior to discharge to water courses. Figure 1.1 shows five types of erosion which can occur on a construction project.

Erosion from Rainfall Impact - The impact of raindrops on bare soil causes erosion. Because the rainfall impact has a low velocity, this type of erosion will normally result in minimum surface erosion on undisturbed land. Even in areas of California with a semi-arid climate and minimal vegetative cover, natural desert soil conditions (including compacted hardpan) provide protection against erosion for all but the most intense rainfalls. Construction activities remove the protective cover of vegetation and natural soil resistance to impact erosion.

Sheet Erosion - After rainfall strikes the ground, it flows in a thin layer, called sheet flow for a short distance. The distance of sheet flow depends on slope, type of soil vegetative cover, and rainfall intensity. Sheet flow has a low velocity and causes little erosion on undisturbed soils. However, clearing the soil during construction makes the soil more susceptible to erosion, increases velocity, and causes the flow to concentrate in rivulets.

Rill and Gully Erosion - As runoff accumulates, it concentrates in rivulets cutting grooves into the soil surface. If the flow is sufficient, rills may develop into gullies. Rills/gullies form sooner on exposed soils than vegetated soils.

Stream and Channel Erosion - The banks and bottoms of natural drainage channels are commonly eroded by three factors which occur during construction:

- Clearing the soil during construction increases the runoff flows, velocities and volumes which reach natural streams;
- Covering the soil with buildings and pavement further increases runoff; and
- Site landscaping and improperly designed desiltation basins may disrupt the natural balance of erosion and sedimentation.

Excessive stream and channel erosion may be limited by controlling runoff flows, velocities and volumes before discharge into the stream and by widening and/or stabilizing the banks of the stream (subject to regulatory approval) to pass increased runoff without excessive erosion.

Wind Erosion - Dust is defined as solid particles or particulate matter which are predominately large enough to eventually settle out from the air but small enough to remain temporarily suspended in the air for an extended period of time. Dust from a construction site, originates as inorganic particulate from rock and soil surfaces, material storage piles and construction materials. The majority of dust generated and emitted into the air at a construction site is related to earth moving, demolition, construction traffic on unpaved surfaces, and wind over disturbed uncompacted soil surfaces (see box, page 1-5).

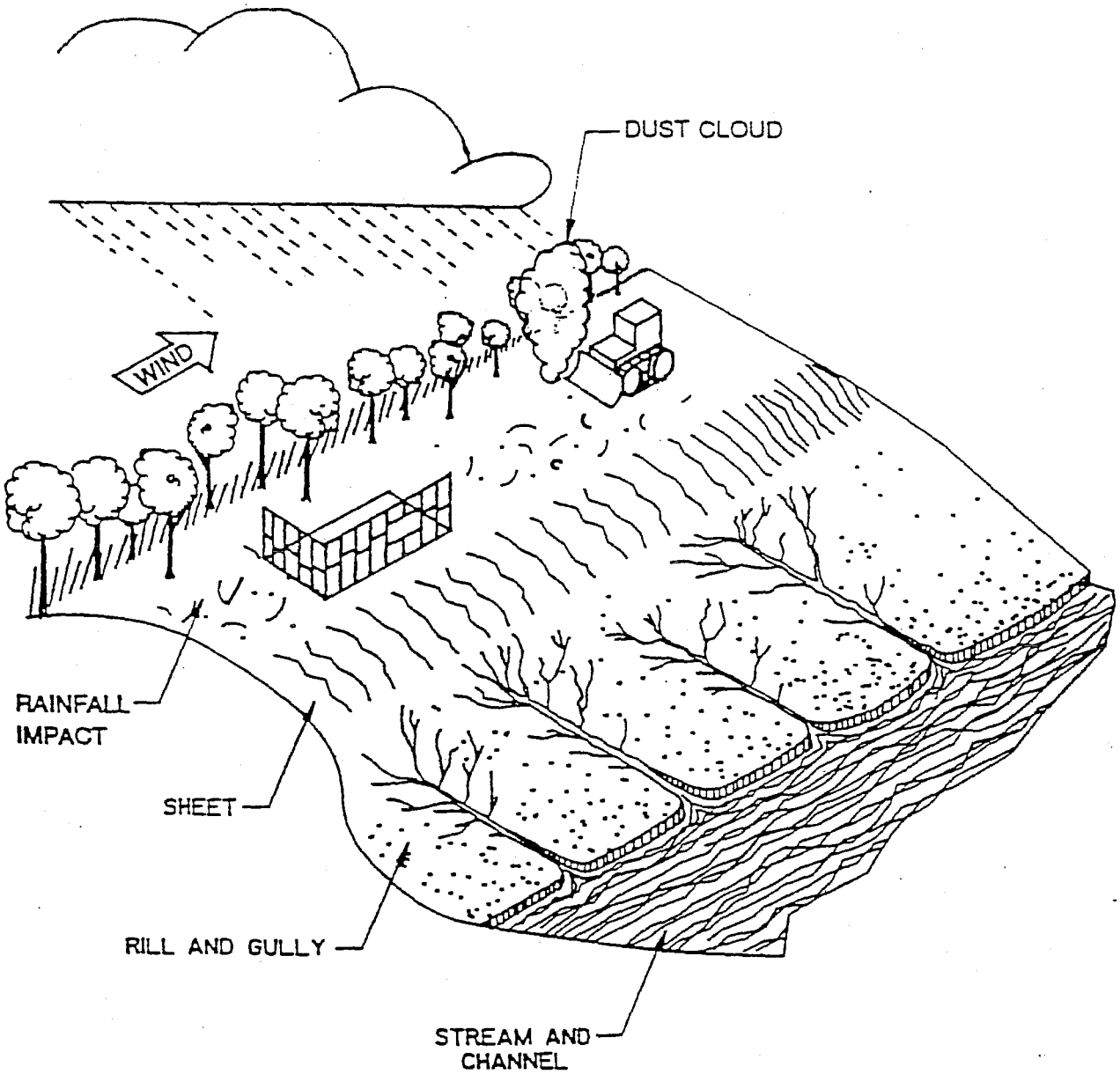

FIGURE 1.1 TYPES OF EROSION OCCURRING AT A CONSTRUCTION SITE

Dust Sources at Construction Sites or From Off-Site Construction Activities

Unpaved Travel Surfaces
- Temporary parking lots and staging areas
- Construction stock piles
- Construction traffic
- Construction access and sediment tracking off-site

Exposed Areas
- Construction sites, bare ground areas
- Land clearing and grubbing activities
- Earthwork, dozing, grading, scraping
- Drilling and blasting
- Soil and debris piles
- Tilling

Materials Handling
- Batch drop, dumping
- Conveyor transfer and stacking
- Material transfer points
- Crushing, milling, and screening operations
- Spilled materials
- Demolition and debris disposal

IMPACTS OF EROSION AND SEDIMENTATION

Degradation of Aquatic and Riparian Ecosystems

Excessive sediment can cause increased turbidity and reduced light penetration resulting in reduction in prey capture for sight feeding predators, clogging of gills and filters of fish and aquatic invertebrates, reduced spawning and juvenile fish survival, reduced angling success, smothering of bottom dwelling community, changes in substrate composition, and reduction in aesthetic values (Schueler, 1987). It can also lead to suppression of both aquatic and terrestrial vegetation and addition of nutrient particles to lakes and streams (Beaton, et al, 1972).

Pollutant Transport

Sediment is a pollutant in its own right and also transports many substances (such as nutrients, hydrocarbons, and trace metals) which cause pollution problems (APWA, 1981). Other pollutants originating as topsoil losses include soil organic components, plant residues, nutrient elements, organic material, atmospheric pollutants, and liquid and solid wastes (Berman, et al., 1991). Toxic substances in storm water have been found to concentrate in the sediments where they interfere with the reproductive cycle of many plants and animals as well as cause tumors and lesions in fish (City of Seattle, 1989). Of additional concern is that pollutants in sediment can be remobilized under suitable environmental conditions.

Erosion and Sedimentation of Water Ways and Public Facilities

Construction usually increases the amount of impervious area causing more of the rainfall to runoff, and increasing the speed at which runoff occurs. Unless properly managed, this increased runoff will erode natural and/or unprotected watercourses causing the watercourse to widen and/or deepen until a stable channel is reformed. This erosion of the watercourse may potentially damage property along the watercourse. Sedimentation can also contribute to accelerated filling of reservoirs, harbors, and drainage systems.

The storm water impacts of construction/land-altering activities do not just result from too much sediment. In many parts of California, stabilization of the land in excess of natural conditions may result in too little sediment, thus removing the natural bedload and causing erosion of downstream watercourses and possibly depleting sand from the beaches.

FACTORS INFLUENCING EROSION

There are primarily four factors that influence erosion: soil characteristics, vegetative cover, topography, and climate. ***Soil characteristics*** which determine the erodibility of the soil are particle size and gradation, organic content, soil structure, and soil permeability. Soils with a high proportion of silt and very fine clays are generally the most erodible. Organic matter creates a favorable soil structure, improving its stability and permeability. This increases infiltration capacity, delays the start of erosion, and reduces the amount of runoff. Soil

characteristics affect soil stability, permeability, and infiltration capacity. The less permeable the soil, the higher the likelihood for erosion.

Vegetative cover plays an extremely important role in controlling erosion by shielding the soil surface from the impacts of falling rain, slowing the velocity of runoff (thereby permitting greater infiltration), maintaining the soil's capacity to absorb water, and holding soil particles in place.

Regarding *topography*, slope length and steepness are key elements in determining the volume and velocity of runoff. As slope length and/or steepness increase, the rate of runoff increases and the potential for erosion is magnified.

The frequency, intensity, and duration of *rainfall* are fundamental factors in determining the amounts of erosion produced. When storms are frequent, intense, or of long duration, erosion risks are high. In California, the erosion risk period is typically highest in the winter rainy season (October through April) except in and near the Sierra Nevada Mountains and southern deserts, where summer thunderstorms may occur. On the other hand, erosion from wind and vehicle traffic can occur year round.

OTHER IMPACTS OF CONSTRUCTION ACTIVITIES

Sediment from erosion is the pollutant most frequently associated with construction activities. However, other pollutants of concern include nutrients, trace metals, other toxic chemicals, and miscellaneous wastes. These pollutants originate from a variety of construction activities. A summary of construction site pollutants is shown in Table 1.1. (Also, see the Municipal BMP Handbook for a discussion regarding the impacts these pollutants have on water quality and aquatic habitat).

NUTRIENTS

Nitrogen, phosphorous, and potassium are the major plant nutrients used for fertilizing new landscape at construction sites. Heavy use of commercial fertilizers can result in discharge of nutrients to water bodies where they may cause excessive algae growth. Phosphorous and nitrogen from fertilizers, pesticides, petroleum products, construction chemicals, and solid waste are often generated by construction site activity (Berman, et al., 1991).

TRACE METALS

Many of the artificial surfaces of the urban environment (e.g., galvanized metal, paint, or preserved wood (Berman, et al., 1991)) contain metals which enter storm water as the surfaces corrode, flake, dissolve, decay, or leach. Over half the trace metal load carried in storm water is associated with sediments (Schueler, 1987).

PESTICIDES

The three most commonly used forms of pesticides at construction sites are herbicides, insecticides, and rodenticides (USEPA, 1976). Unnecessary or improper application of these pesticides may result in direct water contamination, indirect pollution by drift or transport off soil surfaces into water (Washington DOE 1991).

OTHER TOXIC CHEMICALS

Often synthetic organic compounds (adhesives, cleaners, sealants, solvents, etc.) are widely applied and may be improperly stored and disposed. Deliberate dumping of these chemicals into storm drains and inlets (especially used crankcase oils) causes environmental harm to waterways.

MISCELLANEOUS WASTES

Miscellaneous wastes include wash water from concrete mixers, paints and painting equipment cleaning activities, solid wastes resulting from trees and shrubs removed during land clearing, wood and paper materials derived from packaging of building products, food containers such as paper, aluminum, and metal cans and sanitary wastes. The discharge of these wastes can lead to unsightly and polluted waterways.

TABLE 1.1 CONSTRUCTION SITE POLLUTANTS

CATEGORY	PRODUCT	POLLUTANTS
Adhesives	Adhesives, Glues Resins, Epoxy Synthetics Calks, Sealers, Putty, Sealing Agents Coal Tars (Naptha, Pitch)	Phenolics, Formaldehydes Phenolics, Formaldehydes Asbestos, Phenolics, Formaldehydes Benzene, Phenols, Naphthalene
Cleaners	Polishes, (Metal, Ceramic, Tile) Etching Agents Cleaners, Ammonia, Lye, Caustic Sodas Bleaching Agents Chromate Salts	Metals Metals Acidity/Alkalinity Acidity/Alkalinity Chromium
Plumbing	Solder (Lead, Tin), Flux (Zinc Chloride) Pipe Fitting (Cut Shavings) Galvanized Metals (Nails, Fences) Electric Wiring	Lead, Copper, Zinc, Tin Copper Zinc Copper, Lead
Painting	Paint Thinner, Acetone, MEK, Stripper Paints, Lacquers, Varnish, Enamels Turpentine, Gum Spirit, Solvents Sanding, Stripping Paints (Pigments), Dyes	VOC's Metals, Phenolics, Mineral Spirits VOC's Metals Metals
Woods	Sawdust Particle Board Dusts (Formaldehyde) Treated Woods	BOD Formaldehyde Copper, Creosote
Masonry & Concrete	Dusts (Brick, Cement) Colored Chalks (Pigments Concrete Curing Compounds Glazing Compounds Cleaning Surfaces	Acidity, Sediments Metals Asbestos Acidity
Floors & Walls	Flashing Drywall Tile Cutting (Ceramic Dusts) Adhesives*	Copper, Aluminum Dusts Minerals
Remodeling & Demolition	Insulation Venting Systems Brick, Cement, Saw, Drywall	Asbestos Aluminum, Zinc Dusts
Air Conditioning & Heating	Insulting Coolant Reservoirs Adhesives*	Asbestos Freon
Yard O&M	Vehicle and Machinery Maintenance Gasoline, Oils, Additives Marking Paints (Sprays) Grading, Earth Moving Portable Toilets Fire Hazard Control (Herbicides) Health and Safety Wash Waters (Herbicides, Concrete, Oils, Greases)	Oils and Grease, Coolants Benzene & Derivatives, Oils & Grease Vinyl Chloride, Metals Erosion (Sediments) BOD, Disinfectants (Spills) Sodium Arsenite, Dinitro Compounds Rodenticides, Insecticides
Landscaping & Earthmoving	Planting, Plant Maintenance Excavation, Tilling Masonry & Concrete* Solid Wastes (Trees, Shrubs) Exposing Natural Lime or Other Mineral Deposits Soils Additives Revegetation of Graded Areas	Pesticides, Herbicides, Nutrients Erosion (Sediments) BOD Acidity/Alkalinity, Metals Aluminum Sulfate, Sulfur Fertilizers
Materials Storage	Waste Storage (Used Oils, Solvents, Etc.) Hazardous Waste Containment Raw Material Piles	Spills, Leaks, Polluted discharge Spills, Leaks, Polluted discharge Dusts, Sediments, Polluted discharge

* See above categories.

Note: VOC = Volatile Organic Compounds, BOD = Biochemical Oxygen Demand due to the use of oxygen by microorganism decomposing materials.

References: USEPA, 1973. Processes, Procedures, and Methods to Control Pollution Resulting From Construction Activity. Office of Air and Water Programs, EPA 430/9-73-007. October, 1973.

Meech, Mark L., and Margaret Latin Bazany, 1991. Construction Creates Own Set of Hazardous Wastes. Hazmat World August, 1991.

Gosselin, R.E., Ph.D., R. P Smith Ph.D., and H.C. Hodge Ph.D., 1984. Clinical Toxicology of Commercial Products, Fifth Ed. Williams and Wilkins, Baltimore/London.

ALLOWABLE NON-STORM WATER DISCHARGES

The State construction general permit prohibits discharges which do not result from rainfall. However, certain "non-storm water" discharges are allowed if they do not cause a significant pollution problem (see box).

Allowable Non-Storm Water Discharges for Construction Sites

- Discharges from fire fighting
- Fire hydrant flushing
- Potable water sources including dechlorinated water line flushing
- Uncontaminated groundwater resulting from dewatering activities
- Foundation or footing drains where the flows are not contaminated with process materials
- Natural occurring water such as springs, wetlands and riparian habitat
- Irrigation water discharged during seeding, planting, and maintenance, provided fertilizer and pesticides are applied correctly
- Pavement wash waters for dust control and general housekeeping practices provided spills or leaks of toxic or hazardous materials have not occurred and where detergents are not used
- Individual car washing
- Air conditioning condensation

STORM WATER PROGRAMS

The need to protect our environment has resulted in a number of laws and subsequent regulations/programs. At times this has resulted in overlap and ambiguity between the programs. This situation is true for storm water programs. The Federal Clean Water Act, as amended in 1987, is the principal vehicle for the control of storm water pollutants. There are, however, other programs that directly or indirectly deal with the control of storm water pollutants. Examples include: Federal Coastal Zone Act Reauthorization Amendments of 1990, and the State required General Plan for municipalities.

In the following section, various Federal, State and local programs are discussed in relationship to the control of pollutants in storm water. The storm water regulatory programs are new and are expected to evolve over the next several years. Thus the user is advised to contact local regulatory and/or municipal officials for further information.

FEDERAL NPDES PROGRAM

In 1972, the Federal CWA was amended to provide that the discharge of pollutants to waters of the United States from any point source is effectively prohibited, unless the discharge is in compliance with a National Pollutant Discharge Elimination System (NPDES) permit. On November 16, 1990, US Environmental Protection Agency (EPA) published final regulations that establish application requirements for storm water permits for specific categories of industries. Construction activities of five (5) acres or more (or less than 5 acres if part of a common plan of development or sale) are defined in the regulations as an industrial activity.

STATE NPDES PROGRAM

In California, the NPDES storm water permitting program is administered by the State Water Resources Control Board (SWRCB) through the nine Regional Water Quality Control Boards. The SWRCB has established a construction general permit that can be applied to most construction activities in the State (see box next page and Appendix A). Construction permittees may also choose to obtain individual NPDES permits instead of the general permit.

MUNICIPAL NPDES PROGRAM

Municipalities with a population of over 100,000, drainage systems interconnected with these municipalities' systems, or municipalities

Key Conditions of the Construction General Permit

Who Must Comply?

- Permit applies throughout California [1]
- Applies if a total of 5 or more acres is disturbed over the life of the project [2]
- Does not apply to routine or emergency maintenance sponsored by public agencies
- Does not apply to dredging and/or filling regulated by the U.S. Army COE
- The owner/developer of the land is responsible for compliance

How to Comply?

- Prepare the SWPPP before construction begins. It describes:
  - The project
  - Controls during construction: Measures selected to control excessive erosion and other constituents
  - Post-construction controls: Measures to prevent or control pollutants in runoff after construction is complete
  - A plan to inspect and maintain these measures
- Submit Notice of Intent: Notify the SWRCB prior to the beginning of construction
- Keep the SWPPP on site and follow it during construction
- Submit Notice of Termination: Notify the SWRCB that construction is complete

1 Except the Lake Tahoe Basin and Indian lands which are covered by a separate permit.

2 A recent U.S. District Court ruling may require that the permit cover smaller construction projects.

determined to be significant contributors of pollutants are required to obtain a NPDES storm water permit. In California, most of the major urbanized counties have already obtained an NPDES storm water permit (see box above).

Municipalities with NPDES storm water permits for their own municipal separate storm sewer system are responsible for developing a management program for construction activities in their jurisdiction. The program addresses appropriate planning and construction procedures; ensures the implementation, inspection, and monitoring of construction sites

California Counties with NPDES Storm Water Permits (1)

Alameda	Sacramento
Los Angeles	San Bernardino
Orange	San Diego
Riverside	Santa Clara

California Municipalities/Counties Pursuing NPDES Storm Water Permits

Cities

Bakersfield	Modesto	Stockton
Fairfield	Oxnard	Vallejo
Fresno	Suisun City	

Counties

Contra Costa	San Mateo
Kern	Ventura

(1) Consult with local RWQCB to determine if municipality within these counties is covered by the NPDES permit.

which discharge storm water into their systems; and provides for eduction or training for construction site operators.

While construction activities and municipal drain systems are covered by separate permits with distinct conditions, compliance requirements for these two NPDES permits include related activities. The requirements and interaction between these two permits are shown in Figure 1.2.

OTHER STATE AND LOCAL PROGRAMS

In many cases storm water pollution control may already be achieved by existing regulations or programs. In California, the General Plan Law and the California Environmental Quality Act (CEQA), provide a basis for municipalities to review and comment on all projects within their jurisdiction. Under the General Plan Law, municipalities are required to develop policies and regulations which guide development within the municipality. Each development project is then reviewed for conformance with these policies. Under CEQA, projects are also subject to review and comment for any adverse impact the

Construction General Permit Requirements
(Site-Specific)

- Submit Notice of Intent (NOI) to SWRCB (and local municipality if required).
- Prepare and implement a SWPPP.
  - Controls during construction
  - Post-construction controls
- Revise SWPPP as construction conditions change.

Municipal Permit Requirements
(System-Wide)

- Prohibit, detect, and eliminate non-storm water discharges.
- Identify and reduce pollutant sources.
- Characterize current discharges with screening and monitoring.
- Detect and eliminate illicit connections and illegal dumping.
- Prepare and implement storm water management program.
- Ensure adequate funding.

Interaction Between Permits

- SWRCB will expect municipality to enforce all local storm water ordinances, floodplain management regulations, and local standards for grading, erosion, sedimentation.
- NOI for construction provides the municipality with a method for anticipating construction of:
  - New public storm drain systems
  - New source identification
  - New outfall identification
  - Pollution control BMPs
  - Current construction NPDES permit holders
- Municipal storm water management and pollution control program provides construction policies and standards:
  - Site planning requirements
  - Design and construction requirements
  - Public inspection
  - Maintenance requirements
  - Training programs
  - Review and inspection staff.
  - Guidelines and training manuals
  - Technical standards and specifications
- Post-construction controls (e.g., final site grading, erosion control, storm water treatment controls and maintenance) required under the construction general permit will be subject to municipal review and approval through existing procedures.

Figure 1.2 Relationship Between Construction and Municipal NPDES Storm Water Permits

projects may have on the environment, including impacts from storm water discharges.

Other regulations which may be applicable are summarized in Table 1.2. Actions taken under these regulations should be integrated with the SWPPP to promote consistency between activities required by local and State authorities. Because the General Plan Law, CEQA, and the subdivision map act may have a major impact on the development of SWPPP, a separate discussion on these regulations/laws is provided. For more information regarding other regulations shown in Table 1.2, the user is advised to confer with State and/or local authorities.

The General Plan Law: Each municipality is required by law to prepare a general plan to guide development. The general plan is a policy document that frames the long-term objectives for the physical development of the city/county. Each general plan must address at least seven elements (e.g., circulation, open space, conservation, etc.). The extent to which these elements are addressed is determined by the local agency. The municipality may incorporate storm water management objectives in the general plan, particularly objectives for post-construction controls, and adopt specific ordinances, policies, etc., for specific control measures required for new development. The specific plan and zoning ordinance are implementation tools of the general plan. A specific plan has a three-fold purpose: (1) refine the general plan for a "specific" area within the general plan boundaries; (2) regulate specific land uses within a "specific" area within the general plan boundary; and (3) establish detailed policies and regulations for the "specific" area. These policies and regulations may include storm water pollution controls. The specific plan can be adopted by resolution (making it a policy document) or by ordinance (making it a regulatory document).

A zoning ordinance establishes development standards for lots and parcels. Storm water pollution controls can be implemented in the specific plan and zoning stages through enactment of ordinances. These ordinances may preserve watercourses, specify detention and retention requirements, define storm water designs standards, and create open space and buffer areas within the project site (see box, below).

Typical Zoning Ordinances Providing Storm Water Pollution Control

- Preservation and use of flood plains and watercourses.
- Local detention and retention requirements.
- Erosion protection and sediment transport balance.
- Material/activity restrictions.

California Environmental Quality Act: The purpose of CEQA is to expose any adverse environmental impacts a project may have, and to suggest mitigation measures to minimize those impacts. Post-construction controls of storm water pollution are one of many possible mitigation measures which may be considered. If the project is determined to have no adverse impacts, then a negative declaration can be issued. Otherwise, an Environmental Impact Report (EIR) is written before the project will be considered for approval. The EIR discusses proposed project impacts, the means of reducing or eliminating the impacts, and realistic project alternatives. Mitigation measures for potential impacts are addressed by the EIR. Water quality impairment caused by storm water pollution from the site (during and after construction) may be one of these impacts.

Subdivision Map Act: Many privately funded construction projects within California are regulated under the authority of the Subdivision Map Act, which grants the municipality authority to develop subdivision ordinances. These ordinances may include standards for the planning and design of public facilities for proposed projects. Grading standards and erosion protection standards, detention/retention design standards, dust control regulations are

TABLE 1.2 EXISTING REGULATIONS FOR STORM WATER POLLUTION CONTROL

REGULATION	ACTIVITY	POTENTIAL
General Plan Law	Municipal development objectives Adoption of ordinances	Storm water management controls, e.g., pollutants control, watershed protection
California Environmental Quality Act (CEQA)	Environmental review of projects	Mitigation measures for reduction of pollutants
Subdivision Map Act	Adoption of ordinances	Standard/Regulations for grading, erosion protection, detention/retention design, and dust control
Flood Plain Management & Drainage Ordinances	Control of velocity	Control of erosion
	Detention/retention	Control of sediment, pollutants, and quantity
	Bank stabilization and outlet controls	Erosion and Sediment controls
Clean Water Act 401 and 404 Permits	Permits Dredging and Filling in "Waters of the United States"	Erosion control, sediment control, long-term sediment balance & minimize pollutants
		Vegetative controls to preserve riparian areas
Zoning Ordinances	Cluster Development	Minimize Basin-wide runoff & impervious areas
	Hillside Development	Slope & erosion restriction. May include revegetation or stabilization.
	Landscape/Open space	Vegetative BMPs perimeter controls reduction of runoff
Sewer Use Ordinance	Control of illicit connections	Pollutant controls
Uniform Building Code	Chapter 70 - Excavating & Grading	Minimize erosion & sedimentation
		Standards for stable cut & fill slopes
Uniform Plumbing Code	Prevention of illicit connection	Pollutant controls
	Various Chapters on materials & application/use	Pollutant controls
Fire Code	Storage of Materials	Pollutant controls
Air Quality Management Plans	Emission	Sediment & dust controls
1601 and 1603 Stream Bed Alternation Agreements	Alternations to creek and stream beds	Pollutant controls
Coastal Zone Act	Regulation of non-point pollution near the ocean	Pollutant controls

also enacted through subdivision regulations and ordinances. In addition, as part of the subdivision processes, the subdivisions must comply with the general plan, CEQA, zoning ordinances and specific plan policies and/or regulations. Such compliance may include storm water pollution control measures.

Subdivision plan review is accomplished in a two-stage process: a tentative map conditioning stage and final map review stage. The tentative map review/approval process presents the final opportunity for the municipality to require conditions of approval for the project, such as the selection of post-construction BMPs. After the tentative map approval, the project proponents must complete the second stage, submitting a final map showing that the conditions established by the tentative map are satisfied. Improvement plans for the construction of the project facilities (e.g., post-construction BMPs) are processed concurrently with the preparation of the final map. A plan for controlling erosion and sedimentation during construction should also be prepared at the time improvement and grading plans are prepared. Upon acceptance, the local agency may approve the final maps, and improvement plans based on conformance with previously established standards, ordinances, policies, and conditions of approval.

REFERENCES

American Public Works Association, (1981), "Urban Storm Water Management."

Beaton, J., J. Skog, E. Shirley, and R. Howell, (1972), "Water Quality Manual, Analysis of Water Quality for Highway Projects," State of California, Division of Highways.

Berman, L., C. Hartline, N. Ryan, and J. Thorne, (1991), "Urban Runoff: Water Quality Solutions," American Public Works Association, Special Report #61.

City of Seattle, (1989), "Water Quality Best Management Practices Manual for Commercial and Industrial Business."

Schueler, T.R., (1987), "Controlling Urban Runoff: A Practical Manual for Planning and Designing Urban BMPs," Metropolitan Washington Council of Governments.

State Water Resources Control Board, (1992), "General Construction Storm Water Permit," September 8.

United States Environmental Protection Agency, (1976), "Guide for Nonpoint Source Pollution Control," Office of Water.

United States Environmental Protection Agency, (1992), "Draft Storm Water Pollution Prevention for Industrial Activities," Office of Wastewater Enforcement and Compliance.

2. *HOW TO PREPARE A STORM WATER POLLUTION PREVENTION PLAN*

INTRODUCTION

This chapter describes how to prepare and implement a storm water pollution prevention plan (SWPPP) for a construction project. The SWPPP is the focus of the NPDES General Permit issued by the California State Water Resources Control Board (SWRCB) for most construction activities in the State.

Preparing and implementing the SWPPP need not be time-consuming, and can best be accomplished using and/or slightly revising current planning, design, and construction activities employed by most projects (as shown with the accompanying Figure 2.1). The best SWPPPs are those which are prepared as an integral part of these typical project activities. This is because much of the information required by the SWPPP is already part of the project design documentation, and because the design may need to be modified to incorporate controls during construction and post-construction controls.

The SWPPP must be prepared *before* construction begins, ideally during the project planning and design phases. It may be completed at the end of the design phase or early in the construction phase, as shown in Figure 2.1. Implementation of the SWPPP begins when construction begins, typically before the initial clearing, grubbing, and grading operations since these activities can usually increase erosion potential on the site. During construction, the SWPPP should be referred to frequently, and refined by the owner and contractors as changes occur in construction operations which have significant effects on the potential for discharge of pollutants.

The SWPPP may be very dynamic for large, complicated projects constructed in multiple stages over a long period of time. For these projects, planning, design, and construction may be occurring simultaneously. The guidelines for preparing a SWPPP given in this chapter apply to complicated projects as well. In this case, it may be useful to prepare the SWPPP in sections, with each section covering each stage/portion of the project, and an overview section generally discussing the entire project. Remember--there is no required format for the SWPPP, just particular subject matter and guidance which must be provided under the General Permit.

This chapter is organized according to the phases of a construction project: planning, design and construction. For each phase guidelines are given on how to incorporate SWPPP preparation into the work effort. A series of worksheets is included at the end of this chapter to aid in preparation of the SWPPP.

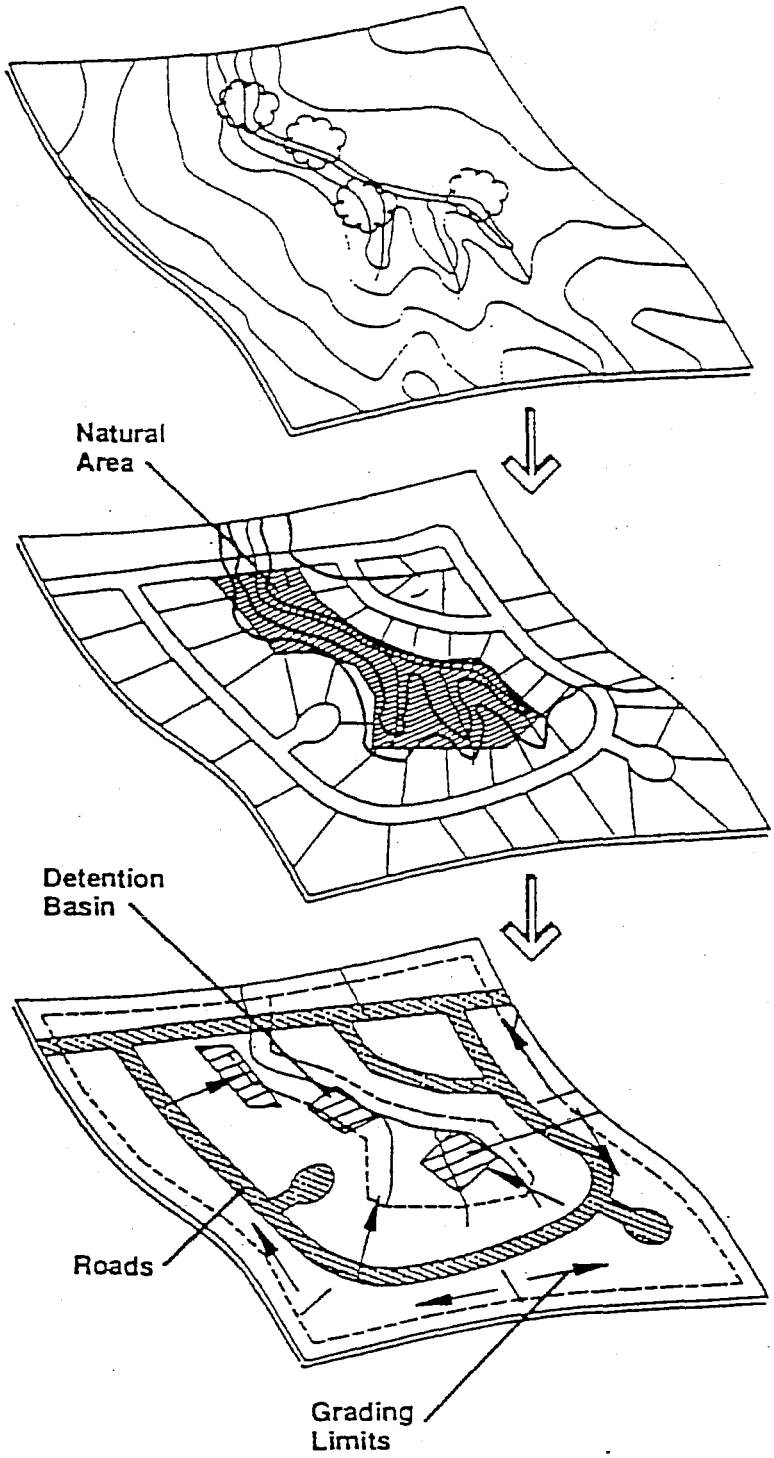

Planning Phase

- Asess Site Conditions
- Develop Base Map
- Select Post-Construction BMPs
- Establish Maintenance Agreements

Design Phase

- Prepare Project Site Plan
- Define BMP Objectives
- Design Post-Construction BMPs

Construction Phase

Bidding and Mobilization
- Select BMPs
- Complete the SWPPP
- Submit the Notice of Intent

Construction Operations
- Inspect and Maintain BMPS for Construction Activities
- Construct Post-Construction BMPs
- Revise the SWPPP as Construction Evolves or Property is Sold

Complete Construction
- Permanent Site Stabilization
- Maintenance Agreement for Post-Construction BMPs
- Submit Notice of Termination

Figure 2.1

Integrating Preparation of the SWPPP Into the Normal Site Development Process

PLANNING PHASE

The planning phase is the source of much of the information needed for the SWPPP. The basis for storm water pollution control decisions are also made at this phase via the normal review process with the local municipality. This section addresses three activities which occur during planning that are important to preparation of the SWPPP:

- Assess Site Conditions
- Develop Base Map(s)
- Select Post-construction BMPs
- Establish Long-Term Maintenance Agreements

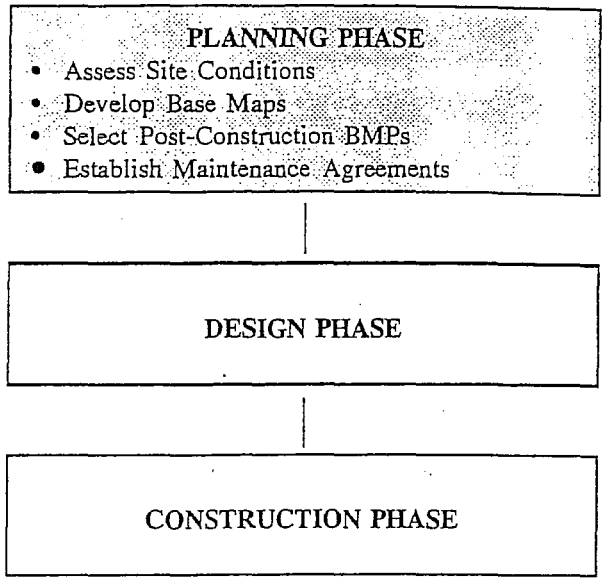

ASSESS SITE CONDITIONS

The planning phase of any construction project defines the characteristics of the site and how these characteristics will impact the project. Information on what will be built, how it will be constructed, drainage patterns, soils, topography, rainfall, and special site conditions (e.g., existing vegetation, unique cultural or environmental features) is usually obtained and used for initial planning of public works or land development projects. This information will be used in selecting BMPs for the project, and typically should be included in or referenced by the SWPPP.

Base Map(s) of Site for SWPPP and Other Site Planning
(See Figure 2.2)

- *Use scale large enough to distinguish existing and proposed features of the site*
- *Location map must extend 1/4 mile beyond the property boundary*
- *Site map(s) should show:*
  - *Topography*
  - *Limits of Construction*
  - *Conceptual project layout*
  - *Surface water bodies, water courses, known wetlands, springs and wells*
  - *Locations where drainage leaves/will leave the property*
  - *Existing land use*
  - *Existing vegetation*
  - *Steep or unstable slopes*
  - *Areas used to store soils and wastes*
  - *Areas of cut and fill*
  - *Existing and planned paved areas and buildings*

DEVELOP A BASE MAP(S)

The designer will generally prepare a site analysis as either a formal document or as an informal plan. The site analysis reviews the site's physical conditions, adjacent areas, constraints, applicable zoning, and development requirements. To avoid duplication of effort and reduce costs, the owner and the designer should prepare a site base map (Figure 2.2) to be shared by the SWPPP and other site analyses (see box above). Worksheet 2 at the end of this chapter is a checklist for preparing a topography base map.

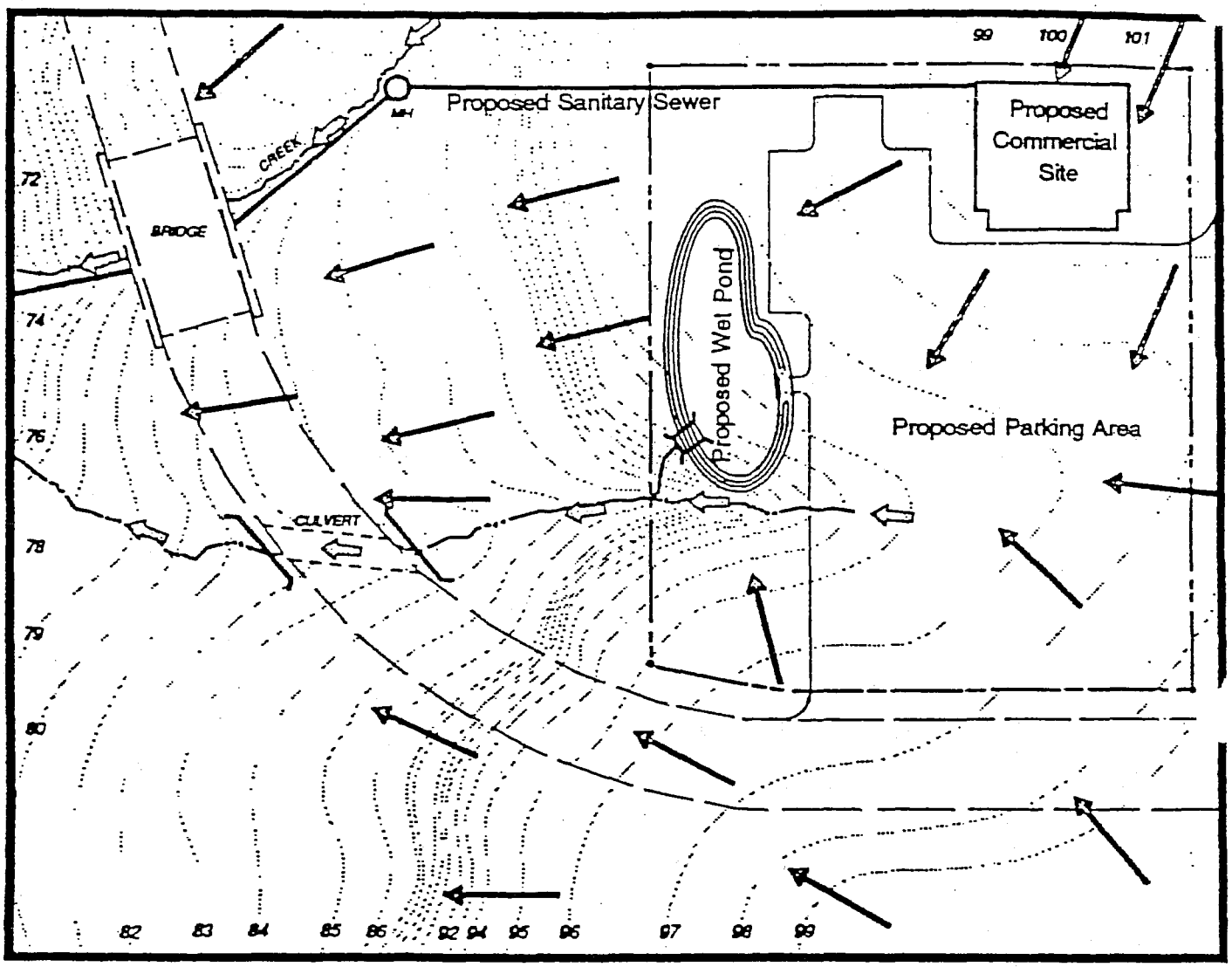

EXISTING FLOW CONDITIONS

OVERLAND

CHANNELIZED (CONCENTRATED)

0 60 120 180

SCALE IN FEET

Source: Adapted from City of Austin

FIGURE 2.2 SITE BASE MAP

SELECT POST-CONSTRUCTION BMPs

Post-construction BMPs are the final improvements to and configuration of the project which are designed to control long-term storm water pollution. Post-construction BMPs are normally selected in the planning phase in conjunction with the approval of the tentative map, designed during the design phase of a project and completed to the satisfaction of the municipality and/or the ultimate owner. Occasionally, unforeseen natural or man-made factors may require revisions to or additions of post-construction BMPs during the construction phase. Post-construction BMPs are typically integrated with the normal project features (see box). In the planning phase (tentative map), it is important to indicate the maintenance responsibility for the post-construction BMPs.

During construction the contractor must ensure that the post-construction BMPs are installed properly and that any maintenance that may be necessary during construction is performed. After the project is complete it will then be the responsibility of the owner, private or public, to provide for long term operation and maintenance. A discussion of selecting post-construction BMPs is presented in Chapter 3 as well as in the Municipal Handbook.

Typical Post-Construction BMPs

1. *Stabilize the site by establishing final land grades, contours, and drainage patterns.*
2. *Control of the volume, flow, and/or velocity of storm water runoff by such means as detention/retention basins, porous pavement, dry wells, debris basins, etc.*
3. *Channel stabilization, energy dissipators, or other drainage structures.*
4. *Permanent landscaping, rock rip rap, vegetation, or other permanent ground cover designed to stabilize the soil or slopes.*

ESTABLISH MAINTENANCE AGREEMENTS

The General Permit requires that the project owner arrange for the maintenance of any drainage/storm water pollution control measures after construction is complete. The local municipality usually will have an established policy defining maintenance responsibilities for community infrastructure, and may require a maintenance agreement as a condition for approval of a tentative map. Two fundamental choices exist:

- Private maintenance: Here, the owners of the property, after construction is complete, retain the responsibility for maintenance. The responsible party may be the owner or an association of property owners/homeowners. It is advisable that a formal agreement such as a deed restriction recorded on the property, be drawn between the municipality and the party responsible for maintenance.

- Public Maintenance: Here, a public agency agrees to assume the maintenance for some or all of the infrastructure. Such maintenance may be incorporated into a municipality-wide program, funded from the municipality's general fund or user fee structure. Alternatively, an agency or special district may be established, to assess property owners within the district. Common examples of special funding methods in California include community service areas (CSA), area drainage plans, and benefit assessment areas.

DESIGN PHASE

There are three principal activities which are typically incorporated into the SWPPP during the design phase:

- Prepare Project Site Plan
- Define BMP Objectives
- Design Post-Construction BMPs

Design considerations for Post-Construction BMPs can be found in Chapter 5 of the Municipal BMP Handbook. The remainder of this section discusses how to incorporate the other two activities at little additional effort beyond normal project design activities.

PREPARE PROJECT SITE PLAN

Numerous studies, reports, and documents are typically prepared during preliminary and final design as the basis for many decisions about the project (see box, this page).

The Hydrology Report, Drainage Study, or similar document is typically required as part of project infrastructure design. Such a study is often required by the local municipality as a condition of a Tentative Map for a land development project, or as part of improvement plans or concept plans for public projects. The Hydrology Report should address the design storm which will be used for erosion and sedimentation control. A common design storm is a two-year, 24-hour storm.

The Soils Report is normally prepared based upon site soil sampling which will identify soil constraints, design criteria, slope stability, etc. Both of these reports are used by the engineer in preparation of the preliminary grading and drainage plan. They also form the technical basis for selection of erosion and sedimentation control BMPs and post-construction BMPs.

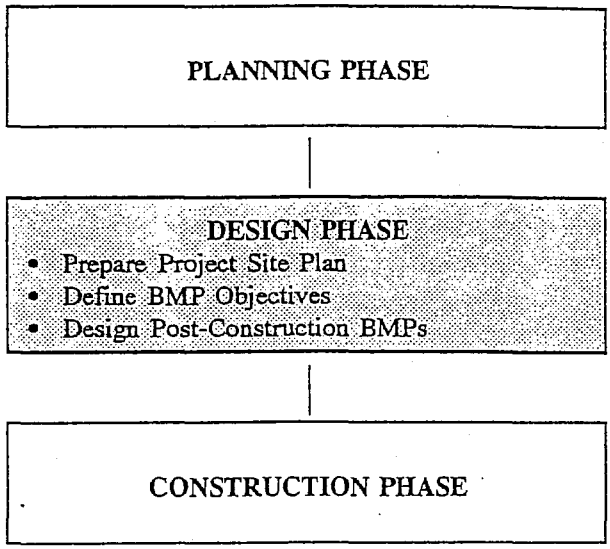

Studies and Reports Prepared during Project Design

Type of Report	*Information Available for the SWPPP*
Preliminary Design	
Soils Report	*Areas of highly erodible soils*
EIR/EA	*Previous and proposed uses of toxic materials on the site*
Preliminary Site Layout	*Locations of buildings and paved surfaces and/or lot layouts*
Final Design	
Drainage or Hydrology Report	*Drainage patterns and drainage area boundaries*
	Storm water conveyance structures
	Detention/retention facilities
Grading/Drainage Plan	*Areas of cut and fill*
	Slopes during and after construction
	Protection of existing vegetation
	Areas of soil disturbance
Landscape Plan	*Buffer areas and set backs*
	Permanent site stabilization
	Multi-purpose uses of open space

Figure 2.3 shows a typical preliminary site layout based on information which is usually readily available during the preliminary design phase of a building project. This preliminary site plan includes several items which are required for the SWPPP:

- Locations of buildings and paved areas
- Proposed flow paths:
  - On-site flow paths where erosion during construction may occur and erosion and sedimentation BMPs should be applied.
  - Locations where runoff will leave the property.
  - Diversion of or conveyance for upstream runoff.
- Locations of flood control facilities and post-construction BMPs.
- Approximate locations where cut and fill will occur.
- Access points for construction traffic.
- Areas where existing vegetation may be preserved.
- Areas to be paved.
- Areas most suitable for the contractors yard, material storage area, and vehicle maintenance area (consider location in areas to be paved).

DEFINE BMP OBJECTIVES

During the final project design process, the engineer, architect or landscape architect will prepare detailed grading plans, paving and drainage plans, landscape plans, and other plans as necessary for the successful construction of the project. These plans provide the construction design requirements, specifications, and other construction documents necessary for the construction bidding, permitting, and inspection. For the SWPPP to be compatible with the other engineering plans, the most practical process may be for the engineer or architect to develop BMP objectives for the construction period based on contractor activities, and the grading and drainage plan for the site (see box).

BMP Objectives

- *Practice Good Housekeeping*
- *Contain Waste*
- *Minimize Disturbed Area*
- *Stabilize Disturbed Area*
- *Protect Slopes and Channels*
- *Control Perimeter of Site*
- *Control Internal Erosion*

A narrative discussion of these objectives should be prepared suitable for inclusion in the SWPPP, as well as to guide the BMP selection process. Worksheets 3, 4, and 5, at the end of this chapter, may be used in conjunction with the site map to define BMP objectives. The locations of various objectives can be shown on a site map (Figure 2.3). Determining objectives facilitates the selection of BMPs.

This step can occur as part of the grading and drainage plan and included in the bid package and/or construction documents for consideration by the contractor. This allows the owner to explicitly address unique site conditions which may impact storm water pollution control during construction. Alternatively, the owner could require the contractor to prepare such a map to justify the selection of BMPs.

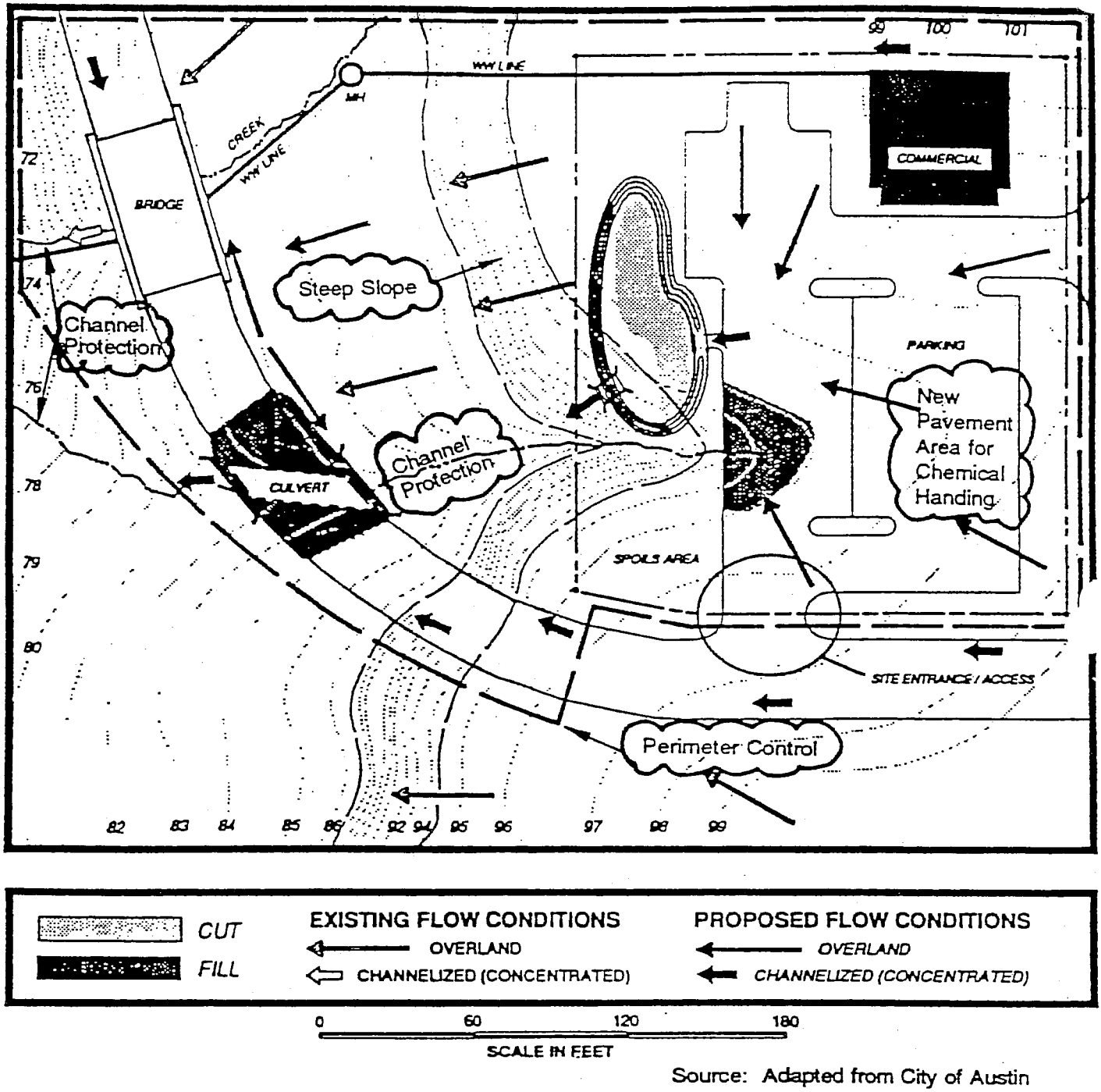

Source: Adapted from City of Austin

FIGURE 2.3 IDENTIFICATION OF BMP OBJECTIVES ON PRELIMINARY BASE MAP

CONSTRUCTION PHASE:

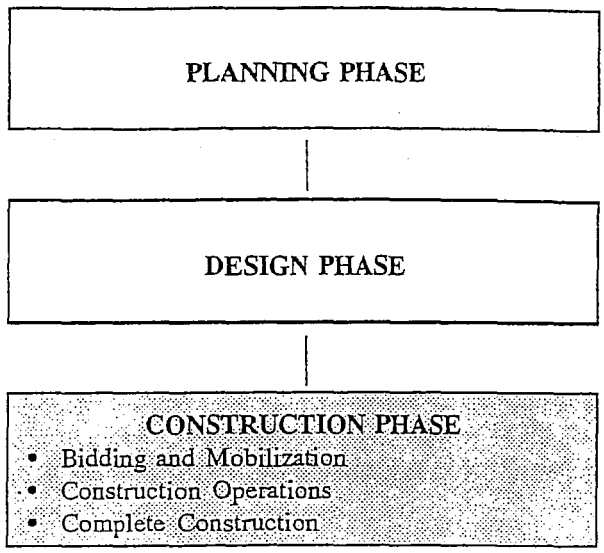

BIDDING AND MOBILIZATION

During bidding and mobilization, the owner selects a contractor(s), who in turn, plans and prepares to construct the project according to the construction plans and specifications. Four activities which must be addressed during this phase include:

- Select BMPs
- Complete the SWPPP
- Submit the Notice of Intent (NOI)
- Train Personnel

Select BMPs

Either the owner, the owner's design consultant, or the contractor may perform these activities, at the discretion of the owner and the local municipality. The construction documentation should specify what the responsibilities of the owner and the contractor are with regard to storm water pollution control both before, during and after construction.

Chapter 3 presents a complete discussion on selecting BMPs for construction activities which can be used by the owner, the project engineer, and the contractor, as appropriate. The following sections discuss how to complete the SWPPP and to prepare the NOI.

Complete the SWPPP

The SWPPP should be directed at personnel on the construction project (e.g., supervisors, foreman, inspectors). The SWPPP should provide specific guidance on actions to be taken by these personnel, and should be presented in a format which accommodates day-to-day use (e.g., loose leaf, pullout sections, check lists). Worksheets for preparing the SWPPP are included at the end of this chapter.

Contents of the SWPPP - The SWPPP should provide a simple narrative and diagram that locates the construction site, identifies potential pollutant sources on-site, shows the location of the management practices to be used to *minimize* erosion and sedimentation during construction, describes measures which *eliminate* pollution of storm runoff by any chemicals and materials used during the construction process, and shows areas of long-term post-construction control measures. Information is provided either in narrative or site plan form (see box, next page). The level of detail will vary with the intensity, size and type of construction. The SWPPP may include copies of detail plans and specifications of the construction work.

Guidelines for SWPPP Preparation - The SWPPP should be an independent document which concisely provides the erosion, sedimentation and pollution control measures to be used. All of the necessary planning work has been done during the site

planning and design process. The final step consists of consolidating the pertinent information and developing it into a specific erosion and sediment control plan for the project. The plan consists of three parts: a site plan, a narrative, and an inspection and maintenance plan. The site plan is one or more of a series of maps or drawings pictorially explaining information contained in the narrative. The narrative verbally explains the problems and their solutions with all necessary documentation. The inspection and maintenance plan describes the procedures whereby the BMPs are maintained in good and effective condition.

Contents of the SWPPP

Project Information (Worksheet 1)

- *Project Name and Location*
- *Owners Name and Address*
- *Contractors present on-site*
- *The Notice of Intent (NOI)*

Site Map(s) (Worksheet 2)

- *Project Location*
- *Area to be Disturbed*
- *Improvements to be Constructed*
- *On-site or Downstream Water Bodies and Water Courses*
- *Pre- and Post-Construction Drainage Patterns*
- *Locations where BMPs will be used*
  - *BMPs for Erosion and Sedimentation Control During Construction*
  - *BMPs for Other Contractor Activities (as appropriate)*
  - *Post-Construction BMPs to be Installed during Construction*

Narrative Descriptions (Worksheets 3, 4, 5 and 6)

- *Known sources of contamination on site before construction*
- *Construction activities which may cause storm water pollution*
- *Pollutants expected to be present on the construction site*
- *BMPs for these constituents/pollutant sources*
- *Responsible party for maintenance*

Monitoring, Inspection and Maintenance (Worksheet 7)

- *Inspection and reporting procedures*
- *Maintenance procedures*
- *Training program*

- *Site Plan*: The SWPPP site plan should be a simple illustration of the project site, showing key physical features and the location of erosion and sediment control measures and all construction operation measures such as entrance drives and construction yards. To the extent possible locally required grading plans and/or erosion control plans should be used in preparing the SWPPP.

Two scales of site maps will usually be required for all but the smallest construction sites:

Project Location Map: A figure showing the project site and the surrounding area (one-quarter mile beyond the project limits and with additional areas if necessary to clearly show local drainage patterns). A USGS 1:24000 scale topographic map is often used as a project location map.

Detailed Site Plan: A series of one or more drawings of the construction site at a scale (typically, no smaller than 1 inch = 400 feet) sufficient to clearly show on-site drainage patterns and the location of erosion and sedimentation controls.

Typical project construction drawings usually include a project site plan which includes most (if not all) of the required information. Simplified details and drawings may also be included or referenced where standard specifications exist. Worksheet 2 may be used as a check list for preparing a site plan.

When the layout of the site has been decided upon, a plan to control erosion, sedimentation, and other pollutants from the disturbed areas must be formulated.

Figure 2.4 is a typical site plan showing locations of BMPs for erosion and sedimentation control based for the BMP objectives indicated in Figure 2.3. Chapter 3 describes procedures for site assessment and BMP selection.

- *Narrative*: The narrative is a written statement which explains the erosion, sediment, and other pollutant control decisions made for a particular project and the justification for those decisions. The narrative should contain concise information concerning existing site conditions, construction schedules, and other pertinent items which are not contained in a typical site plan.

  Worksheets 3, 4, 5 and 6 are intended for guidance on preparing the narrative portions of the SWPPP.

  The narrative is important to the construction superintendent and inspector who are responsible for implementing the plan. It provides them with a single report which describes where and when the various BMPs for contractor activities, erosion and sediment control, and post-construction control should be installed.

- *Monitoring, Inspection, and Maintenance Plan*: Every BMP installed on a construction site must be checked periodically and maintained sufficiently to ensure proper performance. The construction general permit requires that an Inspection and Maintenance Plan be implemented which:

  - Assigns personnel responsible for BMP inspection and maintenance.
  - Requires maintenance of any BMPs whose effectiveness is compromised (e.g., replace failed BMPs, remove trapped sediment, increase size of spill containment flushed out by rain).
  - Keep inspection and maintenance records on file for at least three years.

  Maintenance requirements for each BMP are presented in Chapters 4 and 5. Chapter 6 discusses inspection requirements and methods for assessing the effectiveness of the BMPs.

Submit Notice of Intent

The construction general permit requires that a NOI be submitted to the State Water Resources Control Board (SWRCB) prior to the start of construction. The NOI is not an application for a permit and is not subject to approval--it simply notifies the SWRCB that a construction project is about to begin, the location of that project, the responsible parties, and a certification that a SWPPP has been prepared and will be followed. The owner of the construction project (i.e., permittee) is responsible for submitting the NOI. Owners who submit NOIs are authorized to discharge storm water under the terms and conditions of the construction general permit. The completed NOI must be attached to the SWPPP.

Where to Send the NOI - In California, all permit correspondence regarding the construction general permit (including the NOI and the appropriate annual fee) is submitted to:

California State Water Resources
Control Board
Division of Water Quality
Storm Water Permit Unit
P.O. Box 1977
Sacramento, California 95812-1977

The permittee may also be required to submit NOIs, as well as all other construction general permit correspondence,

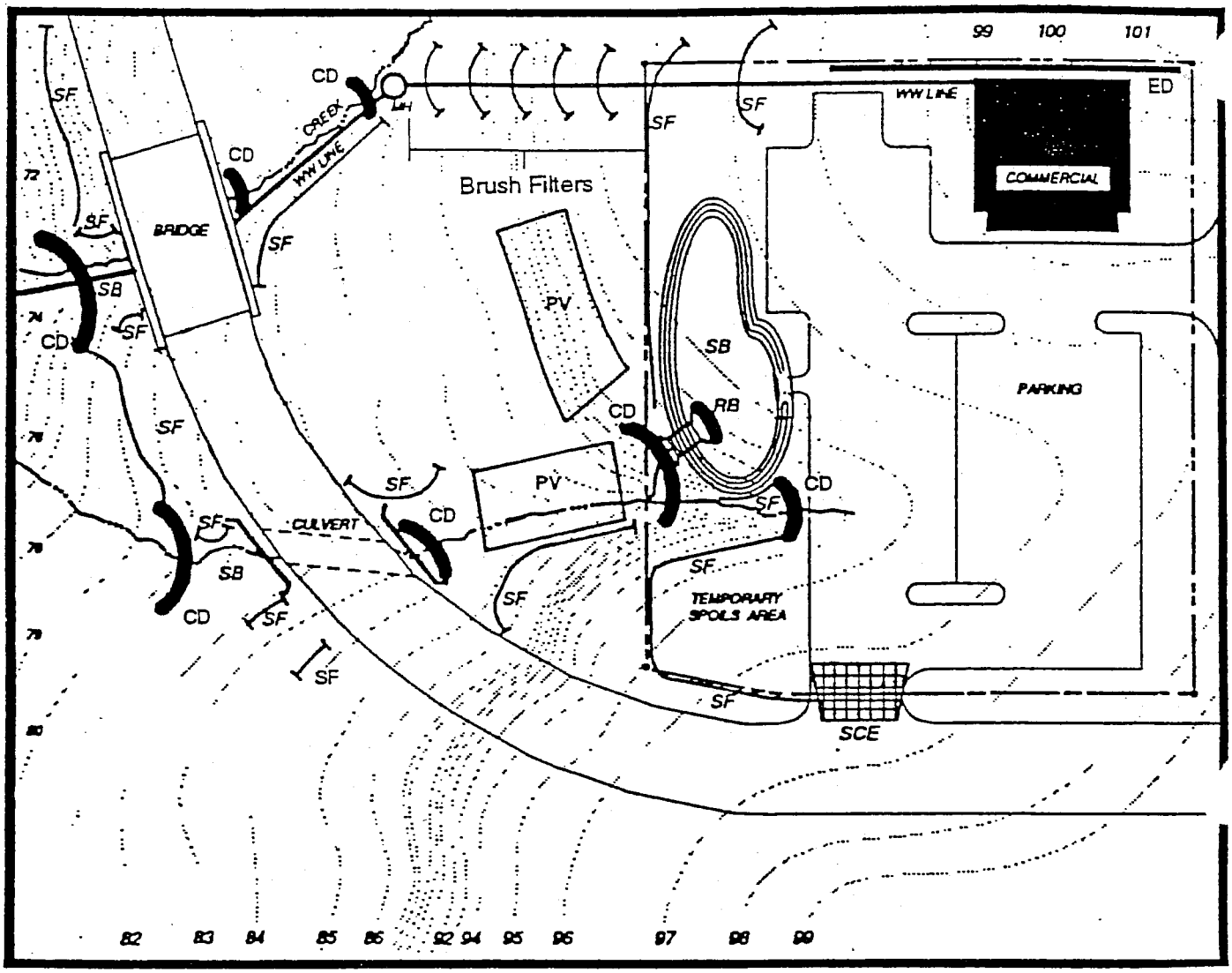

Source: Adapted from City of Austin (1989)

SEDIMENTATION CONTROL BMPs

RB	ROCK BERM
SF	SILT FENCE
BF	BRUSH FILTER
SB	SEDIMENT BASIN (TEMPORARY)
SCE	STABILIZED CONSTRUCTION ENTRANCE
ED	EARTH DIKE

EROSION CONTROL BMPs

CD	CHECK DAM
PV	PRESERVE EXISTING VEGETATION

0 60 120 180

SCALE IN FEET

FIGURE 2.4 SITE PLAN SHOWING LOCATIONS OF BMPs FOR EROSION AND SEDIMENTATION CONTROL

to the local municipality. (Check with your local municipality.)

Failure to Submit the NOI - If a construction project begins before the NOI is submitted, the NOI should be submitted as soon as possible thereafter. All construction projects are subject to the general permit including projects which began before the general permit was issued. Owners of active construction projects without an NOI on file with the SWRCB, or without a SWPPP in place, are discharging storm water without an NPDES permit and are in violation of the Clean Water Act. Violations may result in fines or imprisonment. **Failure to comply with the Clean Water Act may result in fines up to *$25,000* per day of violation or any other appropriate sanction.** In California, the State may also bring forth civil and criminal penalties under the Porter-Cologne Water Quality Act. Municipalities may make plan approval, building permits, etc., subject to submittal of the NOI.

Contents of the NOI - The construction general permit and NOI are included in Appendix A. Much of the information provided on the NOI should have been developed for the SWPPP (see box).

The SWRCB has provided line-by-line instructions on the NOI. An annual fee must be submitted with the NOI. The SWRCB will send an annual invoice each year that the project is under construction.

Contents of the Notice of Intent

- *Owner/Developer's Name, Address, and Telephone Number*
- *Construction Site Information*
  - *Project Name and Address*
  - *Construction Start and Completion Date*
- *Site Map*
  - *Existing and proposed buildings and paved areas*
  - *Storm drainage system*
  - *Adjacent streets*
- *Receiving Water Information*
  - *Municipality where project is located*
  - *Nearest downstream water course or water body (from USGS Map or equivalent)*
- *Type of Construction*
  - *Size of site*
  - *Change in impervious surface area*
- *Material Handling/Management Practices*
  - *Materials to be used during construction*
  - *Management practices to control possible pollutants*
- *Regulatory Status*

TRAIN PERSONNEL

Training is imperative to the success of the BMPs identified in Chapters 4 and 5. Adequate training is required if these BMPs are to be installed and maintained properly. These BMPs will fail if not properly installed and maintained. Thus, only trained personnel should be assigned these responsibilities.

An effective training program is based on four objectives:

- How to identify a storm water pollution problem;
- How to define solutions (i.e., select BMPs);
- Making every employee responsible for storm water pollution and its solution; and
- Soliciting feedback to improve the BMPs.

More information on employee training can be found in BMP CA40 in Chapter 4.

CONSTRUCTION OPERATIONS

The construction bid package will usually contain specifications that the contractor comply with the construction general permit by implementing the SWPPP. This may be done contractually, or the owner may require the contractor/subcontractor to prepare some or all of the SWPPP, and submit the NOI/fee to cover their particular construction activity. During construction, the contractor then implements the BMPs according to the SWPPP. The owner/contractor is also responsible for maintenance and inspection of BMPs for erosion and sediment control and other contractor activities, and the installation of the post-construction BMPs. Because site conditions will vary during construction, the SWPPP should be revised as necessary, with any changes highlighted on the copy maintained at the construction site. There is no formal revision process; upon inspection the SWPPP must reflect the existing status and condition of these site.

If the plan is found to be deficient in meeting one or more of the minimum construction general permit requirements and/or requirements of the local municipality, the owner will be notified by the SWRCB. The owner then has 30 days to provide the SWRCB and/or the municipality written certification that the requested changes have been made.

COMPLETE CONSTRUCTION

During construction, the post-construction BMPs (if any) should have been installed according to construction plans and specifications (see the Design Phase section of this chapter). The general construction permit remains in force until construction is complete. Post-construction BMPs should be properly installed, and responsible parties must be designated and funds committed to the long-term maintenance needs of these BMPs. The local municipality will often have a policy about the installation and maintenance of these post-construction BMPs, and should be consulted.

The SWRCB (and possibly the local municipality) must be notified of two conditions:

- When construction is completed
- When a change of ownership occurs

The SWRCB requires that a Notice of Termination be provided for such notification. If a new owner is assuming responsibility for some or all of the construction site, a revised Notice of Intent and annual fee must also be submitted, and the SWPPP must be revised by the new owner for any changes in construction conditions. It may be appropriate to notify the SWRCB of other significant changes in the status of the property (e.g., the construction site is part of an annexation or incorporation, a change in address) to eliminate any confusion about a particular site. As conditions of project approval, the municipality may also require that the owner be responsible for the performance of post-construction BMPs for a set period of time after the municipality has accepted the improvement and/or after an Occupancy Certification is issued.

REVISIONS	DATE

NOI attached?
[ ] Yes
[ ] No

Storm Water Pollution Prevention Plan (SWPPP) Worksheet
California Construction General Permit

Worksheet 1. Project Information

Project Name: _____

Project Location: Street Address (or Equivalent): _____

City: _____ County: _____ Zip Code: _____

Project Owner: _____

Contact Person: _____ Phone No. _____

Owner's Mailing Address: Street Address (or Equivalent): _____

City: _____ County: _____ Zip Code: _____

[ ] Identify responsible personnel:

[ ] Implementing and revising the SWPPP: _____

[ ] Inspecting equipment: _____

[ ] Regular inspections of BMPs: _____

[ ] Training employees about BMPs affecting their job: _____

List all Contractors and Subcontractors responsible for implementing SWPPP for the project:

NAME	CONTACT PERSON	DATE WORK BEGINS	DATE WORK ENDS

Worksheet 2. Project Site Map Requirements

Please Check the Boxes, and provide supporting information as requested:

[ ] Topographic Base Map Attached? Map shows:

- [ ] An area extending one-quarter mile beyond the property boundaries of the construction site:
- [ ] The boundary of the construction site. Construction Area = _____ Acres.
- [ ] Nearby surface water bodies, including water courses, wetlands, springs and wells.
- [ ] The location(s) where storm water drains onto or off of the property.
- [ ] Boundary of off-site areas that drain into the construction site.

[ ] Site map(s) attached? Maps show:

- [ ] Temporary storm water structures used during construction.
- [ ] Areas used to store soils and construction waste.
- [ ] Areas of cut and fill.
- [ ] Drainage patterns and slopes anticipated after major grading activities, including the location of storm water structures to be constructed on the property (e.g., storm drains, detention ponds, channels).
- [ ] Areas of soil disturbance.
- [ ] Locations of potential soil erosion requiring BMPs during construction.
- [ ] Existing and proposed paved areas and buildings.

  Existing Area:_____ percent of site Proposed Area: _____ percent of site

- [ ] Estimated runoff coefficient before construction: _____ after construction _____
  (See the local municipality for approved runoff coefficients for your community.)
- [ ] Locations where storm water structures and controls will be built to control storm water pollution after construction is complete.
- [ ] The boundary of the drainage area upstream of each location where storm water leaves the property.
- [ ] Any vehicles storage and service areas.
- [ ] Areas of existing vegetation.

Worksheet 3. Inventory of Contractor's Activities and Special Site Conditions

Provide a description of contractor's activities that could result in the discharge of pollutants in the storm water runoff from the site. In addition, provide a description of special site conditions that may impact pollutants in storm water discharges.

Contractor's Activities

[ ] Describe toxic materials that are known to have been stored, disposed, spilled, or leaked in significant quantities onto the construction site:

[ ] Describe construction materials, equipment and vehicles that comes in contact with storm water:

[ ] Describe construction material loading, unloading and access areas/activities:

[ ] Describe equipment storage, cleaning, and maintenance areas/activities:

[ ] Describe storage and disposal of construction materials (on-site and off-site):

Special Site Conditions

[ ] Describe storm water structures and controls on the site prior to construction and how these structures/controls will be integrated into the SWPPP to reduce sediment and other pollutants in storm water discharges:

[ ] List materials/waters other than storm water which will flow from the site during dry weather, the approximate amount of flow, and methods for preventing other dry weather flows:

Worksheet 4. BMPs for Contractor Activities

Provide a list of BMPs selected to reduce pollutants associated with contractor activities (see Worksheet 3). For each BMP selected, identify the pollution(s) of concern (see Table 1.1). Attach modified BMP fact sheets and/or appropriate information for the BMP selected. (See Chapter 4, BMPs for Contract or Activities.)

Contractor Activities (Worksheet 3)	Construction Practices			Materials Management			Waste Management					Vehicle & Equipment Management			Primary Pollutant(s) of Concern
	CA1	CA2	CA3	CA10	CA11	CA12	CA20	CA21	CA22	CA23	CA24	CA30	CA31	CA32	
1. Toxic material on-site															
2. Construction material equipment & vehicles in contact with storm water															
3. Material loading, unloading and access areas/activities															
4. Equipment storage cleaning, and maintenance areas/activities															
5. Storage and disposal of construction materials (on-site and off-site)															

Worksheet 5. BMPs for Erosion and Sedimentation Control

[ ] Describe the source and composition of the existing soil and fill material (Soil Report Attached? Yes____ No____)

[ ] Provide a site map showing locations where BMPs for erosion and sediment control are placed. This map should be updated when BMPs are revised to meet evolving construction conditions. Provide a brief description of BMP selected, and, if appropriate, attach modified fact sheets or additional information for erosion and sedimentation control BMPs.

✓	BMPs SELECTED	DESCRIPTION OF BMPs FOR EROSION & SEDIMENTATION CONTROL
SITE PLANNING CONSIDERATIONS		
	Scheduling	
	Preservation of Existing Vegetation	
SOIL STABILIZATION		
	Seeding and Planting	
	Mulching	
PHYSICAL STABILIZATION		
	Geotextiles and Mats	
	Dust Control	
	Temporary Stream Crossing	
	Construction Road Stabilization	
	Stabilized Construction Entrance	

✔	BMPs SELECTED	DESCRIPTION OF BMPs FOR EROSION & SEDIMENTATION CONTROL
DIVERSION OF RUNOFF		
	Earth Dike	
	Temporary Drains and Swales	
	Slope Drain	
VELOCITY REDUCTION		
	Outlet Protection	
	Check Dams	
	Slope Roughening/Terracing	
SEDIMENT TRAPPING/FILTERING		
	Silt Fence	
	Straw Bale Barrier	
	Sand Bag Barrier	
	Rock or Brush Filter	
	Storm Drain Inlet Protection	
	Sediment Trap	
	Sediment Basin	

Worksheet 6. Post-Construction BMPs

Provide a site map locating treatment control BMPs which will be constructed as part of this project to reduce storm water pollution after construction is complete. Selection of these and other post-construction BMPs may be guided using the Municipal BMP Handbook, and must consider site-specific and seasonal conditions. Provide on the worksheet below the BMP selected, the responsible party for maintenance and operation, and source for funding the operation and maintenance.

✔	BMPs SELECTED	MAINTENANCE RESPONSIBILITY	FUNDING SOURCE FOR O&M
	TREATMENT CONTROL BMPs (See Chapter 5, Municipal Handbook)		
	Infiltration		
	Wet Ponds		
	Constructed Wetlands		
	Vegetated Swales and Strips		
	Extended Detention Basins		
	Media Filtration		
	Oil/Water Separators and Water Quality Inlets		
	Multiple Systems		
	SOURCE CONTROL BMPs (See Chapter 4, Municipal Handbook)		

Describe other measures which will be employed on the project site to control storm water pollution after construction is complete, and steps to be taken by the current owner to ensure that these measures are conducted.

Worksheet 7. Monitoring, Inspection and Maintenance Plan

[ ] Describe maintenance/repair efforts to ensure BMPs are in good and effective condition:

[ ] Describe inspection procedures and record keeping efforts:

[ ] Annual Inspection:

[ ] Pre-storm Inspection:

[ ] Post-storm Inspection:

[ ] Describe training program/material for site personnel responsible for installing, inspecting, and maintaining BMPs:

Certification

I certify under penalty of law that this document and all attachments were prepared under my direction or supervision in accordance with a system designed to assure that qualified personnel properly gather and evaluate the information submitted. Based on my inquiry of the person or persons who manage the system or those persons directly responsible for gathering the information, the information submitted is to the best of my knowledge and belief, true, accurate, and complete. I am aware that there are significant penalties for submitting false information, including the possibility of fine and imprisonment for knowing violations.

Name_____ Title_____

Signature_____ Date_____

This SWPPP was prepared by:

Name_____ Title_____

Signature_____ Date_____

3. BMP SELECTION

OVERVIEW

BMPs are generally selected in a three step process:

- Define BMP Objectives: Define locations where erosion is likely to occur, and where other construction related pollutants may be generated.

- Identify BMP Category: Select the appropriate category or categories of BMPs which address each objective.

- Select appropriate BMPs: BMPs for contractor activities and erosion and sedimentation control are chosen from each category based on site constraints, construction requirements, and cost-effectiveness considerations.

Table 3.1 shows the relationship between BMP objectives and categories of BMPs. Chapters 4 and 5 present the particular BMPs by each category, including key information describing appropriate applications and cost-effectiveness considerations. The number in parentheses correspond to the BMP Fact Sheets in Chapters 4 and 5 (CA stands for Contractor Activities and ESC stands for Erosion and Sedimentation Control). The remainder of this chapter outlines a BMP selection process. **The selection procedures for post-construction BMPs are discussed briefly at the end of this chapter and in more detail in the Municipal BMP Handbook.**

DEFINE BMP OBJECTIVES

Each construction project is unique. Therefore, an understanding of the pollution risks of the construction activity is essential for selecting and implementing BMPs. Defining these risks requires review of the characteristics of the site and the nature of the construction, information which you should have assembled for the SWPPP. Once these pollution risks are defined, BMP objectives are developed, and BMPs selected. The BMP objectives for construction projects are as follows:

- Practice Good Housekeeping: Perform activities in a manner which keeps potential pollutants from either draining or being transported off-site by managing pollutant sources and modifying construction activities.

- Contain Waste: Dispose of all construction waste in designated areas, and keep storm water from flowing on to or off of these areas.

- Minimize Disturbed Areas: Only clear land which will be actively under construction in the near term (e.g., within the next 6-12 months), minimize new land disturbance during the rainy season, and avoid clearing/disturbing sensitive areas (e.g., steep slopes and natural watercourses) and other areas where site improvements will not be constructed.

- Stabilize Disturbed Areas: Provide temporary stabilization of disturbed soils whenever active construction is not occurring on a portion of the site. Provide permanent stabilization during finish grade and landscape the site.

BMP CATEGORY	BMP OBJECTIVES						
	Practice Good Housekeeping	Contain Waste	Minimize Disturbed Areas	Stabilize Disturbed Areas	Protect Slope & Channels	Control Site Perimeter	Control Internal Erosion
BMPs FOR CONTRACTOR ACTIVITIES (Chapter 4)							
Construction Practices (CA 1 to 10)	✓			✓	✓	✓	✓
Material Management (CA 10 to 19)	✓						
Waste Management (CA 20 to 29)		✓	✓	✓			
Vehicle & Equipment Management (CA 30 to 39)	✓					✓	✓
Contractor Training (CA40)	✓	✓					
BMPs FOR EROSION & SEDIMENT CONTROL (Chapter 5)							
Site Planning Considerations (ESC 01 to ESC 10)	✓	✓	✓	✓	✓	✓	✓
Vegetative Stabilization (ESC 10 to ESC 19)				✓	✓		
Physical Stabilization (ESC 20 to ESC 29)	✓		✓	✓	✓	✓	
Diversion of Runoff (ESC 30 to ESC 39)		✓			✓	✓	✓
Velocity Reduction (ESC 40 to ESC 49)				✓	✓		
Sediment Trapping/Filtering (ESC 50 to ESC 59)					✓	✓	✓
POST CONSTRUCTION BMPs (See Municipal BMP Handbook)				✓	✓	✓	✓

TABLE 3.1 CATEGORIES OF BMF ND THE BMP OBJECTIVES MET BY EACH

- Protect Slopes and Channels: Outside of approved grading plan area, avoid disturbing steep or unstable slopes. Safely convey runoff from the top of the slope, and stabilize disturbed slopes as quickly as possible. Avoid disturbing natural channels. Stabilize temporary and permanent channel crossings as quickly as possible, and ensure that increases in runoff velocity caused by the project do not erode the channel.

- Control Site Perimeter: Upstream runoff should be diverted around or safely conveyed through the construction project. Local codes usually state that such diversions must not cause downstream property damage or be diverted into another watershed. Runoff from the project site should be free of excessive sediment and other constituents.

- Control Internal Erosion: Detain sediment-laden waters from disturbed, active areas within the site.

Site characteristics and contractor activities affect both the potential for erosion and contamination by other constituents used on the construction site. Before defining BMP objectives, you should carefully consider:

1. Site conditions that affect sedimentation and erosion including:
   a. Soil type, including underlying soil strata which are likely to be exposed to storm water.
   b. Natural terrain and slope.
   c. Final slopes and grades.
   d. Location of concentrated flows, storm drains, and streams.
   e. Existing vegetation and ground cover.

2. Climatic factors, which in arid and semi-arid regions include:
   a. Seasonal rainfall patterns.
   b. Appropriate design storm
      - quantity of rainfall
      - intensity of rainfall

3. Type of construction activity.

4. Construction schedules.

5. Construction sequencing and phasing of construction.

6. Size of construction project and area to be graded.

7. Location of the construction activity relative to adjacent uses and public improvements.

8. Cost-effectiveness considerations.

9. Types of construction materials and potential pollutants present on-site.

Chapter 2 discussed how these considerations are incorporated into site planning (see Figure 2.3) and design activities.

IDENTIFY BMP CATEGORIES

Once the BMP objectives are defined, it is necessary to identify the category of BMPs that is best suited to meet each objective. A category is a groupings of BMPs which are related in how they control storm water pollution (see Table 3.1). The particular BMP selected from each category depends on the specific site conditions, construction activities, and cost-effectiveness considerations.

To determine where to place categories of BMPs, a map of the project site is prepared (Chapter 2) with sufficient topographic detail to show existing and proposed drainage patterns and existing and proposed permanent storm water control structures. The project site map should identify the following:

- Locations where storm water enters and exits the site. Include both sheet and channel flow for the existing and final grading contours.

- Locate permanent storm water collection and control structures.

- Identify locations subject to high rates of erosion such as steep slopes and unlined channels. Long, steep slopes over 100' in length are considered as areas of moderate to high erosion potential.

- Categorize slopes as:

  - Low Erosion Potential (0 to 5 percent slope)
  - Moderate Erosion Potential (5 to 10 percent slope)
  - High Erosion Potential (slope greater than 10 percent)

- Identify sensitive areas which must not be disturbed, as well as other areas where site improvements will not be constructed. Establish clearing limits around these areas to prevent disturbance by the construction activity.

- Identify the boundaries of drainage areas if your site has more than one drainage outlet. Then calculate the approximate area of each drainage area.

- Define areas where various contractor activities have a likely risk of causing a pollutant discharge.

With this site map in hand, categories of BMPs can be selected and located. In Figure 3.1, the example presented in Chapter 2 is modified to show the integration of BMP categories into the site plan. In general, the categories of BMPs should be considered in the order listed in Table 3.1. This is because it is more effective to prevent erosion/pollution than to remove sediment/pollutants, and because erosion prevention is achieved most cost-effectively by planning before construction begins and phasing construction activities.

As shown in Table 3.1, many BMPs achieve more than one BMP objective. This should be taken into account when selecting BMPs to achieve maximum cost-effectiveness. For instance, it is not always necessary to install extensive sediment trapping controls during construction. In fact, sediment trapping should be used only as a short-term measure for active construction areas, and replaced by permanent stabilization measures as soon as possible. In arid and semi-arid areas of California, the seasonal rainfall patterns are such that for *short* duration construction activities, the scheduling of the grading activities is often a site planning management strategy. However, because the timing of construction may be difficult to predict and rainfall may occur in off seasons, the contractor should always stabilize each portion of the construction site as soon as active construction ends, and install sediment trapping BMPs.

SELECTING BMPS FOR CONTRACTOR ACTIVITIES

Certain contractor activities (see box, page 3-6) may cause pollution if not properly managed. BMPs should be selected for each activity shown in the box.

Chapter 4 describes BMPs for preventing storm water pollution potentially caused by these contractor activities. Not all of the BMPs listed on each fact sheet will apply to every construction site. However, all of the suggested BMPs in Chapter 4 should be considered, and those which are appropriate for the project at hand should be selected. When the Fact Sheets in Chapter 4 suggest several BMPs for a particular construction activity, the activity must be evaluated and the risk assessed of pollutants reaching the drainage system or otherwise being transported off-site. Considerations include the following:

- Is it expected to rain? BMPs may be different on rainy days vs. dry days, winter vs. summer, etc. For instance, a material storage area may be covered with a tarp during the rainy season, but not in the summer.

- How much material is used? Less stringent BMPs may be used if a "small" amount of

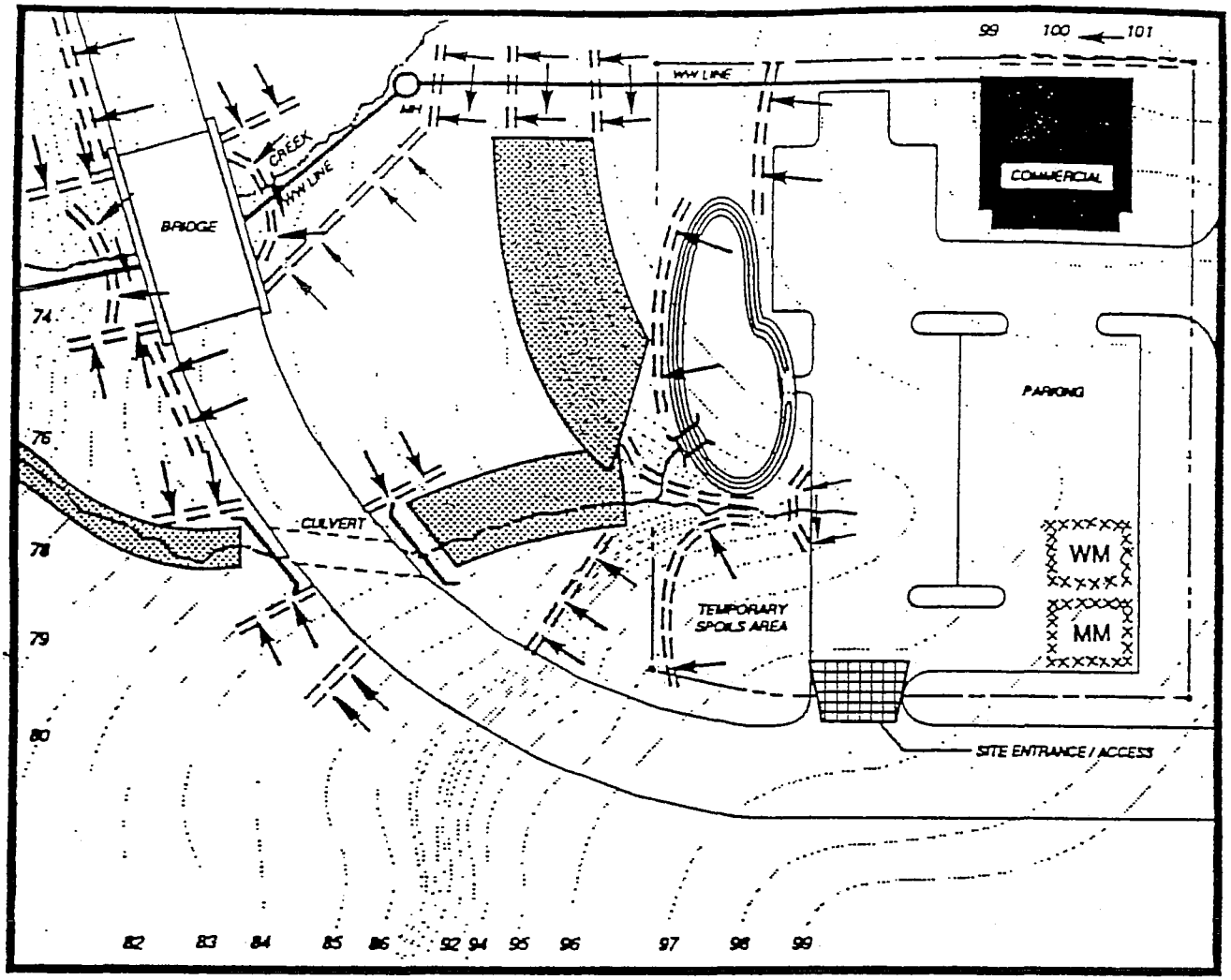

BMP CATEGORIES

- MM — MATERIAL MANAGEMENT
- WM — WASTE MANAGEMENT
- SITE PLANNING
- PHYSICAL STABILIZATION
- DIVERSION
- VELOCITY REDUCTION
- SEDIMENT TRAPPING
- POST-CONSTRUCTION

0 60 120 180

SCALE IN FEET

FIGURE 3.1 SELECTION OF BMP CATEGORIES

Contractor Activities That Impact Storm Water Quality

Construction Practices
- Dewatering Operations (CA1)
- Paving Operations (CA2)
- Structure Construction (Wood, Concrete, Steel) and Painting (CA3)

Material Management
- Material Delivery and Storage (CA10)
- Material Use (CA11)
- Spill Prevention and Control (CA12)

Waste Management
- Solid Waste (CA20)
- Hazardous Waste (CA21)
- Contaminated Soils (CA22)
- Concrete Wastes, Sandblasting Grit (CA23)
- Sanitary/Septic Waste (CA24)

Vehicle and Equipment Management
- Cleaning (CA30)
- Fueling (CA31)
- Maintenance (CA32)

Note: The number in parenthesis corresponds to the BMP Fact Sheet in Chapter 4.

material is used (however, remember that different materials pollute in different amounts).

- How much water is used? The more water used and wastewater generated, the more likely that pollutants transported by this water will reach the drainage system or be transported off-site. Washing out one concrete truck on a flat area of the site may be sufficient (as long as the concrete is safely removed later), but a containment pit should be constructed if a number of trucks will be washed out at the same site. Consideration should be given to recycling water whenever possible.

- What are the site conditions? BMPs selected will differ depending on whether the activity is conducted on a slope or flat ground, near a drainage structure or watercourse, etc. Anticipating problems and conducting activities away from certain sensitive areas will reduce the cost and inconvenience of performing BMPs.

- What about accidents? Pre-establishing a BMP for every conceivable pollutant discharge may be very costly and significantly disrupt construction. As a rule of thumb, establish controls for common activities, and be prepared to respond quickly to accidents (define the difference--not everything can be called an accident).

Therefore, keep in mind that the BMPs for contractor activities in Chapter 4 are suggested practices which may or may not apply in every case. Construction personnel should be instructed to develop additional or alternative BMPs which are more cost-effective for a particular project. **The best BMP is a construction work force aware of the pollution potential of their activities, and committed to a clean worksite.**

SELECTING BMPs FOR EROSION AND SEDIMENT CONTROL

BMPs for erosion and sediment control are selected to meet the BMP objectives based on specific site conditions, construction activities, and cost-effectiveness. Different BMPs may be needed at different times during construction since construction activities are constantly changing site conditions. Thus the SWPPP may include a set of BMPs suitable for different stages of the project. Refer to Table 3.1 to match the BMP objective to the appropriate category of BMPs in Chapter 5. The remainder of this section discusses how each BMP objective in Table 3.1 should be met to address the dynamics of a typical construction project.

MINIMIZE DISTURBED AREAS

The first step for selecting BMPs is to compare the project layout and schedule with on-site management measures that where appropriate can limit the exposure of the project site to erosion and sedimentation. Scheduling and

planning considerations are generally discussed in Section 2, with each site planning BMP described in detail in the first section of Chapter 5. These BMPs all have a similar goal, which is to minimize the amount of the site subject to erosion. Consider the following BMPs:

1. Do not disturb any portion of the site unless an improvement is to be constructed there.

2. The staging and timing of construction can minimize the size of exposed areas and the length of time the areas are exposed and subject to erosion.

3. The staging of grading operations should limit the amount of areas exposed to erosion at any one time. Only the areas that are actively involved in cut and fill operations or are otherwise being graded should be exposed. Exposed areas should be stabilized as soon as grading is complete in that area.

4. Retain existing vegetation and ground cover where feasible, especially along watercourses and along the downstream perimeter of the site.

5. Do not clear any portion of the site until active construction begins.

6. Quickly complete construction on each portion of the site.

7. Install landscaping and other improvements that permanently stabilize each part of the site immediately after the land has been graded to its final contour.

8. Minimize the amount of denuded areas and any new grading activities during the wet months of October through April.

9. Construct post-construction storm water control facilities (e.g., detention basins) early in the project and use for sediment trapping, slope stabilization, velocity reduction, etc. during the construction period.

Site Stabilization BMPs

Vegetative Stabilization
- Seeding and Planting (ESC10)
- Mulching (ESC11)

Physical Stabilization
- Geotextiles and Mats (ESC20)
- Dust Control (ESC21)
- Temporary Stream Crossing (ESC22)
- Construction Road Stabilization (ESC23)
- Stabilized Construction Entrance (ESC24)

STABILIZE DISTURBED AREAS

The purpose of site stabilization BMPs is to prevent erosion by covering disturbed soil. This covering may be vegetative, chemical, or physical (see box, above). Any exposed soil is subject to erosion--either by rainfall striking the ground, runoff flowing over the soil, wind blowing across the soil, and vehicles driving on the soil. Thus all exposed soils should be stabilized except where active construction is in progress. Locations on a construction site which are particularly subject to erosion and should be stabilized as soon as possible include:

- Slopes
- Highly erosive soils
- Construction entrances
- Stream channels
- Soil stockpiles

Stabilize disturbed areas keeping in mind the following:

1. As a rule, native vegetation in undisturbed areas represents the "baseline" for erosion control. The Subdivision Map Act provides language to limit erosion to pre-development levels. Thus, retaining native vegetation in undisturbed areas provides the first and best line of defense against erosion and sedimentation and does so at least cost to the contractor, while minimizing the requirement to revegetate or provide structural controls.

2. Temporary ground covers (e.g., temporary seeding, mulch, chemical and fabric stabilizers) protect the soil from erosion until permanent vegetation can be established or permanent construction is installed.

3. Timing of revegetation efforts is critical in arid regions. Revegetation should be performed just before or during the rainy season unless an irrigation system exists on-site.

4. Certain relative non-toxic chemicals, such as magnesium chloride or lignum sulfate may be used for soil stabilization where revegetation is not practicable (see ESC21, Dust Control, Chapter 5). These two chemicals do not have an adverse impact on plant life and are a low-cost stabilization treatment.

5. Ground cover of gravel, decomposed granite, wood chips, or mulch may be used.

6. Oil treatment or sodium chloride is unacceptable.

PROTECT SLOPES AND CHANNELS

The next step is to provide slope protection in disturbed areas. Consider the following BMPs:

1. Avoid constructing steep slopes. Increasing slope length and steepness increases the velocity of runoff, which greatly increases its erosive energy. If slope steepness is doubled while other factors are held constant, soil loss potential is increased 2½ times. If both slope steepness and length are doubled, soil loss potential is nearly 4 times greater.

2. Divert or intercept storm water before it reaches long and/or steep slopes using temporary dikes, swales, or pipe slope drains.

3. Long or steep slopes should be terraced at regular intervals (per local requirements). Terraces will slow down the runoff and provide a place for small amounts of sediment to settle out.

4. Slope benches may be constructed with either ditches along them or back-sloped at a gentle angle toward the hill. These benches and ditches intercept runoff before it can reach an erosive velocity and divert it to a stable outlet.

5. Slope stability for cuts and fills should conform to local agency grading ordinances, Uniform Building Code requirements, and/or soil report recommendations.

6. Overland flow velocities can be reduced by creating a rough surface for runoff to cross. Driving a bulldozer up and down a slope (called trackwalking) creates tread marks parallel to slope contours. These miniature terraces both slow runoff velocity and provide flat places for vegetation to hold.

7. Raking or disking the soil surface before seeding also keeps runoff velocities down and increases plant establishment rates. Vegetation, once established, will further reduce runoff rates.

8. Build check dams or other energy dissipation structures in unlined drainage channels to slow runoff velocity and encourage settlement of sediments.

9. Construct velocity reducing structures or riprap linings as soon as storm water outfalls are constructed.

CONTROL SITE PERIMETER

Perimeter control establishes barriers along the perimeter of the project site. Several strategies

for using BMPs for perimeter control may be considered.

1. Divert upstream runoff around or though the construction site (according to local drainage policies) with no contact with exposed soils or construction activities (i.e., the diversion of runoff BMP category);

2. Runoff from areas upslope of those that have been denuded should not be allowed to cross the exposed soils, particularly when the denuded areas are on slopes (i.e., the diversion of runoff BMP category);

3. Leave a vegetative barrier along the property boundary and interior water courses (i.e., the site planning BMP category); and

4. Trap and remove sediment in runoff from the construction site before it leaves the property (i.e., the sediment trapping BMP category).

Perimeter controls should be placed everywhere runoff enters or leaves the site. They are usually installed just before clearing, grubbing and rough grading begin. Perimeter controls for all but the smallest projects will become overloaded by both runoff and sediment, and should be supplemented by additional controls within the interior of the construction site once rough grading is complete.

Runoff which is free of excessive sediment should be diverted around disturbed areas of the construction site and other locations highly susceptible to erosion. If possible, the runoff should be diverted to stabilized areas where the runoff can be retained and allowed to soak into the ground, or into stabilized drainage ways with sufficient hydraulic capacity to convey any increases in flow. Major flow diversions (i.e., from areas greater than 1 acre) should be designed according to local design standards, and approved by the local municipality as part of the project approval process. This avoids potential flood damage to the construction site or downstream areas. When possible, permanent drainage structures should be built early in the construction project to collect and convey flow diversions.

Runoff Diversion BMPS

- Earth Dike (ESC30)
- Temporary Drains/ Swales/Drains (ESC31)
- Slope Drain (ESC32)

Note: Runoff diversions from areas greater than 1 acre should be constructed according to local drainage design criteria.

Several types of temporary runoff diversions are described in this Handbook (see box, above). Runoff diversions should be considered in the following situations:

1. Divert upslope water around unvegetated areas of the construction site with dikes, swales, or temporary storm drains.

2. Divert runoff to soils able to absorb water (areas which are vegetated, mulched, or where surface roughening exists.

3. Dikes and ditches are the two most common BMPs to divert upland runoff away from a disturbed area; to intercept runoff on cut or fill slopes; and to prevent runoff from entering a disturbed area, such as a group of building pads.

4. Upstream, off-site flow can be taken to the downstream area of the project site and released (according to local drainage policies) back into the natural drainage pattern. A spreading basin or other temporary form of energy dissipator may be needed for large diverted flows or at the base of steep slopes.

5. Perimeter channel or berm to divert flow should not flood, cause erosion or otherwise adversely impact surrounding properties. While structures designed for

sediment control are temporary and are designed to remove sediment from frequent storms (e.g., less than 2-year storm), they must be designed to safely detain and/or carry major floods without increased risk of property damage.

CONTROL INTERNAL EROSION

Once all other erosion and sediment control BMPs have been exhausted, excessive sediment should be removed from the storm water both within and along the perimeter of the project site. The appropriate controls work on the same principle: the velocity of sediment-laden runoff is slowed by temporary barrier basins which pond the storm water to allow sediments to settle out (see box, this page). Appropriate strategies for implementing sediment trapping controls include:

1. Direct sediment-laden storm water to temporary sediment traps.

2. Locate sediment basins and traps at low points below disturbed areas.

3. Protect all existing or newly-installed storm drainage structures from sediment clogging by providing inlet protection for area drains and curb inlets.

4. Direct off-site and/or sediment-free storm water away from denuded areas and away from temporary sediment traps.

5. Construct temporary sediment traps or basins at the drainage outlet for the site. The discharge from one basin should not enter the inlet of another basin.

6. Excavate post-construction storm water detention basins early in the project, use them as sedimentation basins during construction, remove accumulated sediment, and landscape the basin when the upstream drainage area is stabilized.

7. Temporary sediment barriers such as:

   - Silt Fences
   - Straw Bale Barriers
   - Sand Bag Barriers
   - Brush or Rock Filter

   should only be used in areas where sheet flow runoff occurs. They are ineffective if the runoff is concentrated into rill or gully flow (see Figure 1.1). Temporary sediment barriers should only be installed along a contour line on relatively flat slopes where sufficient area for ponding sediment-laden water exists. These barriers are not appropriate for large drainage areas unless the drainage area is split and additional barriers are placed upstream so that the incremental drainage area to each barrier is less than one acre.

8. Protect all existing or newly-installed storm drainage structures from sediment clogging by providing inlet protection for area drains and curb inlets.

Sediment Trapping BMPs

- Silt Fence Barrier (ESC50)
- Straw Bale Barrier (ESC51)
- Sand Bag Barrier (ESC52)
- Brush or Rock Filter (ESC53)
- Storm Drain Inlet Protection (ESC54)
- Sediment Trap (ESC55)
- Sediment Basin (ESC56)

SELECTION OF POST-CONSTRUCTION BMPS

Most post-construction BMPs will be proposed by the developer early in the planning stage of a project. Usually, these BMPs will be oriented toward municipal requirements established in a master plan or by ordinance. For most projects, there will be no single BMP which addresses all the post-construction storm water quality problems. Instead, a multi-level strategy will be worked out with the local municipality which incorporates source controls, on-site treatment controls, and community-wide treatment controls. This section provides a brief discussion of selecting post-construction BMPs from the owner/developers perspective. A more thorough discussion may be found in Chapters 3, 4, and 5 of the Municipal Handbook.

SOURCE CONTROL BMPs

The following six categories of source control BMPs are described in Chapter 4 of the Municipal Handbook:

- Planning Management: Municipalities may regulate through zoning ordinances, subdivision ordinances, or buffer/setback requirements the amount of runoff from a site. The municipality may discourage development in environmentally sensitive areas. For a specific project, the developer may achieve these goals by minimizing the impervious area that is directly connected to the drainage system, and by incorporating setbacks from surface waters.

- Materials Management: The objective of these BMPs is to minimize the opportunity for rainfall or runoff to come into contact with pollutants. Commercial and industrial project designs should be adopted to keep pollutant storage/use/disposal areas out of floodplains, away from drainage paths, under cover, and/or in containment areas.

- Spill Prevention: Spill prevention BMPs should be incorporated into project design by using containments, leak-resistent materials, and accessways for proper cleanup.

- Illegal Dumping: Signs may be installed at inlets or along drainageways, and brochures may be distributed to residents/tenants of new facilities to increase awareness about illegal dumping.

- Illegal Connections: Most municipalities will have ordinances, and may require inspection of construction sites, to prevent connections to the storm water system from non-storm water sources. This includes connections of floor drains, washdown areas, septic tank overflows, and the like.

- Street/Storm Drain Maintenance: Infrastructure maintenance after construction will be required and may be performed by the municipality or property owner. Such BMPs would include street sweeping, catch basin cleaning, and drainage structure cleanouts. Maintenance considerations (e.g., easements, access, disposal) should be integrated into the infrastructure when designed.

TREATMENT CONTROL BMPs

When are treatment control BMPs needed? No clear answer to this question exists in the regulations or general permits. The decision to provide a treatment control BMP should be made during the planning/design phase for a project. The municipality may have conducted a master plan (or equivalent planning procedures) to determine where on-site and community-wide facilities are appropriate. Where on-site facilities are needed, the municipality would most likely define the performance standards through ordinances or policies. Typical performance standards include holding peak flow and/or runoff volume after construction equal to runoff peak flow/volume before development, or capture of a specific amount of runoff. Where community-wide facilities are desired, the developer may need to

construct these facilities (for larger development projects), or pay a share of these facilities' cost through an equitable fee-in-lieu of method.

Thus it is important that the construction site owner/developer and municipality establish the overall performance standard. This will allow the developer to select the appropriate treatment control BMPs given site conditions, costs, and performance standards.

The treatment control BMPs presented in the Municipal Handbook include:

Infiltration
Wet Ponds
Constructed Wetlands
Biofilters
Extended Detention Basins
Media Filtration
Oil/Water Separators and
Water Quality Inlets
Multiple-Systems

Using the site characteristic and the design guidance provided in Chapter 5 of the Municipal Handbook, potential applicable BMPs can be sized and their cost estimated.

In most cases treatment control BMPs can be implemented most effectively when they can be integrated into other aspects of the project design.

- Is a detention/retention facility useful for flood control? Often, facilities needed to maintain peak runoff at predevelopment levels are either required by the local municipality or desired to reduce downstream conveyance system costs. Most treatment control BMPs can be incorporated into flood control detention/retention facilities with modest design refinements, and limited increasing land and cost. This alternative should be reviewed by the local flood control agency to check that both flood control and pollution control objectives are met.

- Are open space/parkland requirements a condition of development? Planned open space which will be relatively flat (e.g., final grade slopes less than 5 percent) may be merged with storm water quality/quantity facilities. Such integrated, multi-use areas may achieve several objectives a modest cost.

- Is water conservation an issue? Storm water runoff can be used to supplement other water resources. Infiltration BMPs may serve as groundwater recharge facilities, detention/retention areas may be created in landscaped areas of the project, and vegetated swales/filters may be used as roadside/median vegetated areas to reduce water demand.

- Is habitat/wetland preservation/mitigation needed? Project EIRs and other regulatory reviews may require that these issues be addressed. Treatment control BMPs like constructed wetlands and wet detention ponds are also excellent habitat. However, regulatory issues will likely exist and require early negotiations.

BMP CATEGORY	BMP OBJECTIVES						
	Practice Good Housekeeping	Contain Waste	Minimize Disturbed Areas	Stabilize Disturbed Areas	Protect Slope & Channels	Control Site Perimeter	Control Internal Erosion
BMPs FOR CONTRACTOR ACTIVITIES (Chapter 4)							
Construction Practices (CA 1 to 10)	✓			✓	✓	✓	✓
Material Management (CA 10 to 19)	✓						
Waste Management (CA 20 to 29)		✓	✓	✓			
Vehicle & Equipment Management (CA 30 to 39)	✓					✓	✓
Contractor Training (CA40)	✓	✓					
BMPs FOR EROSION & SEDIMENT CONTROL (Chapter 5)							
Site Planning Considerations (ESC 01 to ESC 10)	✓	✓	✓	✓	✓	✓	✓
Vegetative Stabilization (ESC 10 to ESC 19)				✓	✓		
Physical Stabilization (ESC 20 to ESC 29)	✓		✓	✓	✓	✓	
Diversion of Runoff (ESC 30 to ESC 39)		✓			✓	✓	✓
Velocity Reduction (ESC 40 to ESC 49)				✓	✓		
Sediment Trapping/Filtering (ESC 50 to ESC 59)					✓	✓	✓
POST CONSTRUCTION BMPs (See Municipal BMP Handbook)				✓	✓	✓	✓

TABLE 3.1 CATEGORIES OF BMPs AND THE BMP OBJECTIVES MET BY EACH

4. BMPs FOR CONTRACTOR ACTIVITIES

INTRODUCTION

This chapter describes specific Best Management Practices (BMPs) for common construction activities that may pollute storm water. Chapter 2 led you through the steps of identifying activities at your site that can pollute storm water, while Chapter 3 provided guidance on BMP selection. This chapter will provide a list of BMPs that can be used to fit your site's needs.

BMP fact sheets are provided for each of the contractor's activities, noted in the box, are consistent with Worksheet 4 in Chapter 2.

Each fact sheet contains a cover sheet with:

- A description of the BMP
- Approach
- Requirements
  - Costs, including capital costs, and operation and maintenance (O&M) costs
  - Maintenance (including administrative and staffing)
- Limitations
- References

The side bar presents information on which BMP objective applies, targeted constituents, and an indication of the level of effort and costs to implement. For some BMPs, further information is provided in additional sheets.

Contractor Activities

Construction Practices
- CA1 Dewatering Operations
- CA2 Paving Operations
- CA3 Structure Construction and Painting

Material Management
- CA10 Material Delivery and Storage
- CA11 Material Use
- CA12 Spill Prevention and Control

Waste Management
- CA20 Solid Waste Management
- CA21 Hazardous Waste Management
- CA22 Contaminated Soil Management
- CA23 Concrete Waste Management
- CA24 Sanitary/Septic Waste Management

Vehicle and Equipment Management
- CA30 Vehicle and Equipment Cleaning
- CA31 Vehicle and Equipment Fueling
- CA32 Vehicle and Equipment Maintenance

Contractor Training
- CA40 Employee/Subcontractor Training

These BMP fact sheets are suitable for inclusion in many storm water pollution prevention plans for typical contractor activities. The BMPs listed are not an exhaustive list, nor will every BMP be appropriate for every situation. Therefore, suggested BMPs which are inappropriate may be deleted and additional BMPs for specific site conditions should be added. In addition, your selection and implementation of BMPs should be reviewed on a regular basis to match the changing conditions at construction sites.

TABLE 4.1 CONTRACTOR ACTIVITIES AND BMP OBJECTIVES

	BMP CATEGORY	BMP OBJECTIVES						
		PRACTICE GOOD HOUSE-KEEPING	CONTAIN WASTE	MINIMIZE DISTURBED AREA	STABILIZE DISTURBED AREA	PROTECT SLOPES AND CHANNELS	CONTROL SITE PERIMETER	CONTROL INTERNAL EROSION
	Construction Practices							
CA01	Dewatering Operations	✓				✓	✓	✓
CA02	Paving Operations	✓						
CA03	Structure Construction and Painting	✓			✓			
	Material Management							
CA10	Material Delivery and Storage	✓						
CA11	Material Use	✓						
CA12	Spill Prevention and Control	✓						
	Waste Management							
CA20	Solid Waste Management		✓					
CA21	Hazardous Waste Management		✓					
CA22	Contaminated Soil Management		✓	✓	✓			
CA23	Concrete Waste Management		✓					
CA24	Sanitary/Septic Waste Management		✓					
	Vehicle and Equipment Management							
CA30	Vehicle and Equipment Cleaning	✓					✓	✓
CA31	Vehicle and Equipment Fueling	✓						
CA32	Vehicle and Equipment Maintenance	✓						
	Contractor Training							
CA40	Employee/Subcontractor Training	✓	✓					

ACTIVITY: DEWATERING OPERATIONS

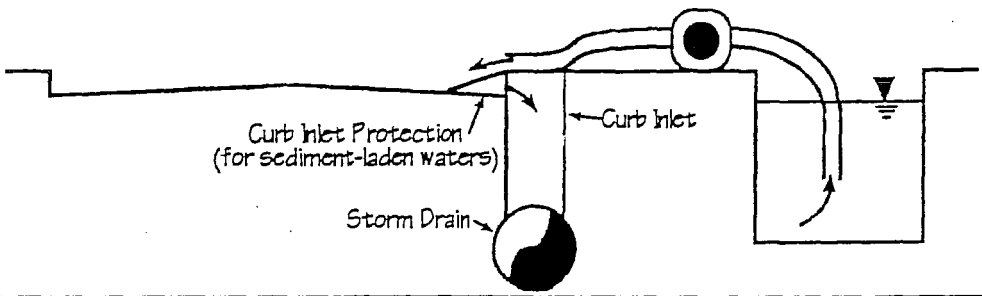

Objectives

- Housekeeping Practices
- Contain Waste
- Minimize Disturbed Areas
- Stabilize Disturbed Areas
- Protect Slopes/Channels
- Control Site Perimeter
- Control Internal Erosion

DESCRIPTION

Prevent or reduce the discharge of pollutants to storm water from dewatering operations by using sediment controls and by testing the groundwater for pollution.

APPROACH

There are two general classes of pollutants that may result from dewatering operations; sediment, and toxics and petroleum products. A high sediment content in dewatering discharges is common because of the nature of the operation. On the other hand, toxics and petroleum products are not commonly found in dewatering discharges unless, the s.te or surrounding area has been used for light or heavy industrial activities, or the area has a history of groundwater contamination. The following steps will help reduce storm water pollution from dewatering discharges:

Sediment

- Use sediment controls to remove sediment from water generated by dewatering (See Sediment Trap (ESC 55) and Sediment Basin (ESC 56) in Chapter 5).
- Use filtration to remove sediment from a sediment trap or basin. Filtration can be achieved with:
  - Sump pit and a perforated or slit standpipe with holes and wrapped in filter fabric. The standpipe is surrounded by stones which filters the water as it collects in the pit before being pumped out.Wrapping the standpipe in filter fabric may require an increased suction inlet area to avoid clogging and unacceptable pump operation.
  - Floating suction hose to allow cleaner surface water to be pumped out.

Toxics and Petroleum Products

- In areas suspected of having groundwater pollution, sample the groundwater near the excavation site and have the water tested for known or suspected pollutants at a certified laboratory. Check with the Regional Water Quality Control Board and the local wastewater treatment plant for their requirements for dewatering, additional water quality tests, and disposal options.
- With a permit from the Regional Water Quality Control Board, you may be able to recycle/reuse pumped groundwater for landscape irrigation, or discharge to the storm sewer. With a permit from the local agency, you may be able to treat pumped groundwater and discharge it to the municipal wastewater treatment plant via the sanitary sewer.
- For a quick reference on disposal alternatives for specific wastes, see Table 4.2, CA40, Employee/Subcontractor Training.

Targeted Pollutants

- ● Sediment
- ○ Nutrients
- ◒ Toxic Materials
- ○ Oil & Grease
- ○ Floatable Materials
- ○ Other Construction Waste

- ● Likely to Have Significant Impact
- ○ Probable Low or Unknown Impact

Implementation Requirements

- ◒ Capital Costs
- ◒ O&M Costs
- ◒ Maintenance
- ◒ Training
- ○ Suitability for Slopes >5%

● High ○ Low

CA1

Best Management Practices

CONTRACTOR ACTIVITY: DEWATERING OPERATIONS (Continue)

REQUIREMENTS

- Costs (Capital, O&M)
  - Sediment controls are low cost measures.
  - Treatment and/or discharge of polluted groundwater can be quite expensive.
- Maintenance
  - Maintain sediment controls and filters in good working order. (See Chapter 5 for details)
  - Inspect excavated areas daily for signs of contaminated water as evidenced by discoloration, oily sheen, or odors.

LIMITATIONS

- The presence of contaminated water may indicate contaminated soil as well. See CA22 (Contaminated Soil Management) in this chapter for more information.

REFERENCES

Blueprint for a Clean Bay-Construction-Related Industries: Best Management Practices for Storm Water Pollution Prevention; Santa Clara Valley Nonpoint Source Pollution Control Program, 1992.

Storm Water Management for Construction Activities, Developing Pollution Prevention Plans and Best Management Practices, EPA 832-R-92005; USEPA, April 1992.

CA1

Best Management Practices

ACTIVITY: PAVING OPERATIONS

Graphic: North Central Texas COG, 1993

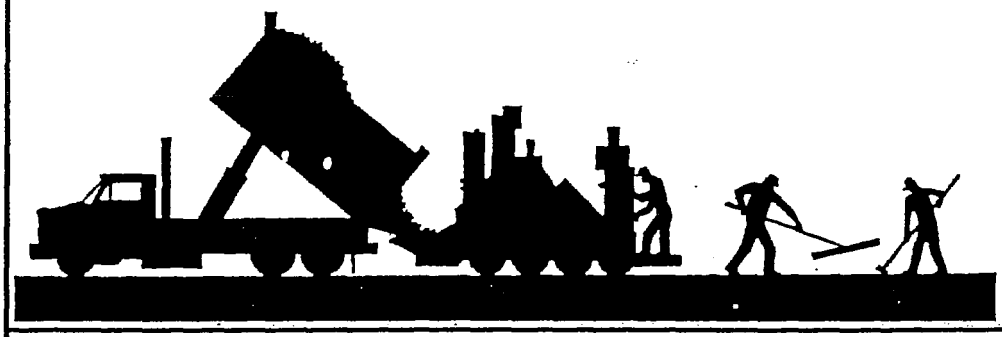

Objectives

- Housekeeping Practices
- Contain Waste
- Minimize Disturbed Areas
- Stabilize Disturbed Areas
- Protect Slopes/Channels
- Control Site Perimeter
- Control Internal Erosion

DESCRIPTION

Prevent or reduce the discharge of pollutants from paving operations, using measures to prevent runon and runoff pollution, properly disposing of wastes, and training employees and subcontractors.

APPROACH

- Avoid paving during wet weather.
- Store materials away from drainage courses to prevent storm water runon (see CA10 Material Delivery and Storage).
- Protect drainage courses, particularly in areas with a grade, by employing BMPs to divert runoff or trap/filter sediment (see Chapter 5).
- Leaks and spills from paving equipment can contain toxic levels of heavy metals and oil and grease. Place drip pans or absorbent materials under paving equipment when not in use. Clean up spills with absorbent materials rather than burying. See CA32 (Vehicle and Equipment Maintenance) and CA12 (Spill Prevention and Control) in this chapter.
- Cover catch basins and manholes when applying seal coat, tack coat, slurry seal, fog seal, etc.
- Shovel or vacuum saw-cut slurry and remove from site. Cover or barricade storm drains during saw cutting to contain slurry.
- If paving involves portland cement concrete, see CA23 (Concrete Waste Management) in this chapter.
- If paving involves asphaltic concrete, follow these steps:
  - Do not allow sand or gravel placed over new asphalt to wash into storm drains, streets, or creeks by sweeping. Properly dispose of this waste by referring to CA20 (Solid Waste Management) in this chapter.
  - Old asphalt must be disposed of properly. Collect and remove all broken asphalt from the site and recycle whenever possible.
  - If paving involves on-site mixing plant, follow the storm water permitting requirements for industrial activities.
- Train employees and subcontractors.

REQUIREMENTS

- Costs (Capital, O&M)
  - All of the above are low cost measures.
- Maintenance
  - Inspect employees and subcontractors to ensure that measures are being followed.
  - Keep ample supplies of drip pans or absorbent materials on-site.

LIMITATIONS

- There are no major limitations to this best management practice.

Targeted Pollutants

- ◒ Sediment
- ○ Nutrients
- ◒ Toxic Materials
- ◒ Oil & Grease
- ○ Floatable Materials
- ○ Other Construction Waste

● Likely to Have Significant Impact
○ Probable Low or Unknown Impact

Implementation Requirements

- ○ Capital Costs
- ○ O&M Costs
- ◒ Maintenance
- ◒ Training
- ○ Suitability for Slopes >5%

● High ○ Low

CA2

Best Management Practices

REFERENCES

Blueprint for a Clean Bay-Construction-Related Industries: Best Management Practices for Storm Water Pollution Prevention; Santa Clara Valley Nonpoint Source Pollution Control Program, 1992.

Hot-mix Asphalt Paving Handbook, U.S, Army Corps of Engineers, AC 150/5370-14, Appendix I, July 1991.

CA2

Best Management Practices

ACTIVITY: STRUCTURE CONSTRUCTION AND PAINTING

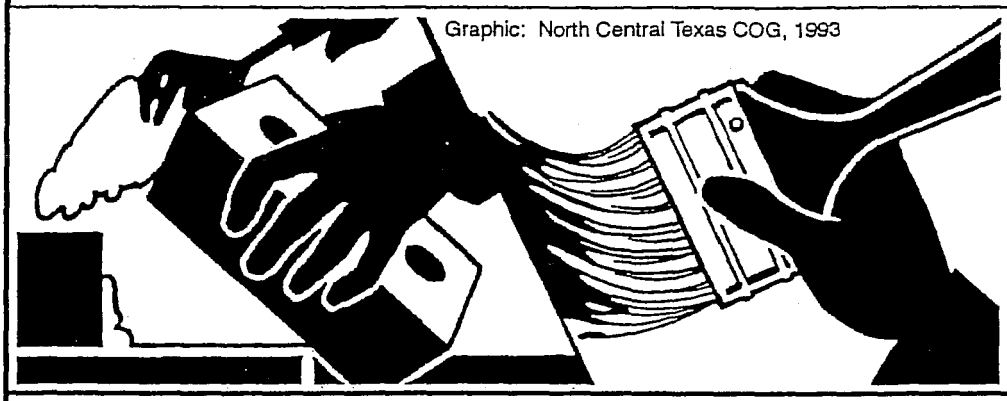

Graphic: North Central Texas COG, 1993

Objectives

- *Housekeeping Practices*
- *Contain Waste*
- *Minimize Disturbed Areas*
- *Stabilize Disturbed Areas*
- *Protect Slopes/Channels*
- *Control Site Perimeter*
- *Control Internal Erosion*

DESCRIPTION

Prevent or reduce the discharge of pollutants to storm water from structure construction and painting by enclosing or covering or berming building material storage areas, using good housekeeping practices, using safer alternative products, and training employees and subcontractors.

APPROACH

- Keep the work site clean and orderly. Remove debris in a timely fashion. Sweep the area.
- Use soil erosion control techniques if bare ground is exposed (See Chapter 5).
- Buy recycled or less hazardous products to the maximum extent practicable.
- Conduct painting operations consistent with local air quality and OSHA regulations.
- Properly store paints and solvents. See CA10 (Material Delivery and Storage) in this chapter.
- Properly store and dispose waste materials generated from the activity. See the waste management BMPs (CA20 to CA24) in this chapter.
- Recycle residual paints, solvents, lumber, and other materials to the maximum extent practicable.
- Make sure that nearby storm drains are well marked to minimize the chance of inadvertent disposal of residual paints and other liquids.
- Clean the storm drain system in the immediate construction area after construction is completed.
- Educate employees who are doing the work.
- Inform subcontractors of company policy on these matters and include appropriate provisions in their contract to make certain proper housekeeping and disposal practices are implemented.
- For a quick reference on disposal alternatives for specific wastes, see Table 4.2, CA40, Employee/Subcontractor Training.

REQUIREMENTS

- Costs (Capital, O&M)
  - These BMPs are generally of low to moderate cost.
- Maintenance
  - Maintenance should be minimal.

LIMITATIONS

- Safer alternative products may not be available, suitable, or effective in every case.
- Hazardous waste that cannot be re-used or recycled must be disposed of by a licensed hazardous waste hauler.

Targeted Pollutants

- ○ *Sediment*
- ○ *Nutrients*
- ◒ *Toxic Materials*
- ○ *Oil & Grease*
- ● *Floatable Materials*
- ● *Other Construction Waste*

● *Likely to Have Significant Impact*
○ *Probable Low or Unknown Impact*

Implementation Requirements

- ○ *Capital Costs*
- ○ *O&M Costs*
- ○ *Maintenance*
- ◒ *Training*
- ○ *Suitability for Slopes >5%*

● *High* ○ *Low*

CA3

Best Management Practices

- Be certain that actions to help storm water quality are consistent with Cal- and Fed-OSHA and air quality regulations.

Construction and painting activities can generate pollutants that can reach storm water if proper care is not taken. The sources of these contaminants may be solvents, paints, paint and varnish removers, finishing residues, spent thinners, soap cleaners, kerosene, asphalt and concrete materials, adhesive residues, and old asbestos insulation. For specific information on some of these wastes see the following BMPs in this chapter:

CA20 Solid Waste,
CA21 Hazardous Waste, and
CA23 Concrete Waste.

More specific information on structure construction practices is listed below.

Erosion and Sediment Control

If the work involves exposing large areas of soil or if old buildings are being torn down and not replaced in the near future, employ the appropriate soil erosion and control techniques described in Chapter 5.

Storm/Sanitary Sewer Connections

Carefully install all plumbing and drainage systems. Cross connections between the sanitary and storm drain systems, as well as any other connections into the drainage system from inside a building, are illegal. Color code or flag pipelines on the project site to prevent such connections, and train construction personnel.

Painting

Local air pollution regulations may, in many areas of the state, specify painting procedures which if properly carried out are usually sufficient to protect storm water quality. These regulations may require that painting operations be properly enclosed or covered to avoid drift. Use temporary scaffolding to hang drop cloths or draperies to prevent drift. Application equipment that minimizes overspray also helps. When using sealants on wood, pavement, roofs, etc, quickly clean up spills. Remove excess liquid with absorbent material or rags.

If painting requires scraping or sand blasting of the existing surface, use a drop cloth to collect most of the chips. Dispose the residue properly. If the paint contains lead or tributyl tin, it is considered a hazardous waste. Refer to the waste management BMPs in this chapter for more information.

Mix paint indoors, in a containment area, or in a flat unpaved area not subject to significant erosion. Do so even during dry weather because cleanup of a spill will never be 100% effective. Dried paint will erode from sloped surfaces and be washed away by storms. If using water based paints, clean the application equipment in a sink that is connected to the sanitary sewer or in a containment area where the dried paint can be readily removed. Properly store leftover paints if they are to be kept for the next job, or dispose of properly.

Roof work

When working on roofs, if small particles have accumulated in the gutter, either sweep out the gutter or wash the gutter and trap the particles at the outlet of the downspout. A sock or geofabric placed over the outlet may effectively trap the materials. If the downspout is lined tight, place a temporary plug at the first convenient point in the storm drain and pump out the water with a vactor truck, and clean the catch basin sump where you placed the plug.

REFERENCES

Blueprint for a Clean Bay-Construction-Related Industries: Best Management Practices for Storm Water Pollution Prevention; Santa Clara Valley Nonpoint Source Pollution Control Program, 1992.

CA3

Best Management Practices

ACTIVITY: MATERIAL DELIVERY AND STORAGE

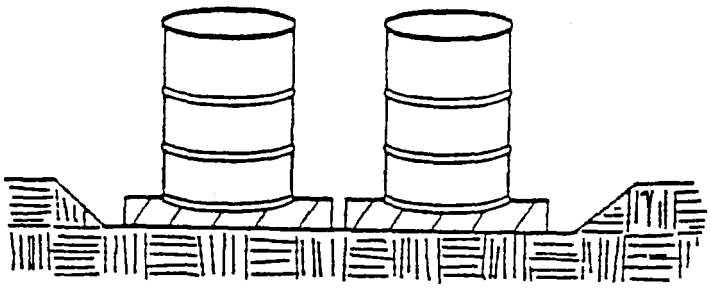

Objectives

- *Housekeeping Practices*
- *Contain Waste*
- *Minimize Disturbed Areas*
- *Stabilize Disturbed Areas*
- *Protect Slopes/Channels*
- *Control Site Perimeter*
- *Control Internal Erosion*

Targeted Pollutants

- ◒ *Sediment*
- ◒ *Nutrients*
- ◒ *Toxic Materials*
- ◒ *Oil & Grease*
- ◒ *Floatable Materials*
- ○ *Other Construction Waste*

- ● *Likely to Have Significant Impact*
- ○ *Probable Low or Unknown Impact*

Implementation Requirements

- ○ *Capital Costs*
- ○ *O&M Costs*
- ○ *Maintenance*
- ◒ *Training*
- ○ *Suitability for Slopes >5%*

● *High* ○ *Low*

CA10

Best Management Practices

DESCRIPTION

Prevent or reduce the discharge of pollutants to storm water from material delivery and storage by minimizing the storage of hazardous materials on-site, storing materials in a designated area, installing secondary containment, conducting regular inspections, and training employees and subcontractors.

This best management practice covers only material delivery and storage. For other information on materials, see CA11 (Material Use), or CA12 (Spill Prevention and Control). For information on wastes, see the waste management BMPs in this chapter.

APPROACH

The following materials are commonly stored on construction sites:

- Soil,
- Pesticides and herbicides,
- Fertilizers,
- Detergents,
- Plaster or other products,
- Petroleum products such as fuel, oil, and grease, and
- Other hazardous chemicals such as acids, lime, glues, paints, solvents, and curing compounds.

Storage of these materials on-site can pose the following risks:

- Storm water pollution,
- Injury to workers or visitors,
- Groundwater pollution, and
- Soil contamination.

Therefore, the following steps should be taken to minimize your risk:

- Designate areas of the construction site for material delivery and storage.
  - Place near the construction entrances, away from waterways
  - Avoid transport near drainage paths or waterways
  - Surround with earth berms (see ESC30, Earth Dike.)
  - Place in an area which will be paved
- Storage of reactive, ignitable, or flammable liquids must comply with the fire codes of your area. Contact the local Fire Marshal to review site materials, quantities, and proposed storage area to determine specific requirements. See the Flammable and Combustible Liquid Code, NFPA30.
- For a quick reference on disposal alternatives for specific wastes, see Table 4.2, CA40, Employee/Subcontractor Training.
- Keep an accurate, up-to-date inventory of materials delivered and stored on-site.
- Keep your inventory down.

ACTIVITY: MATERIAL DELIVERY AND STORAGE (Continue)

- Minimize hazardous materials on-site storage.
- Handle hazardous materials as infrequently as possible.
- During the rainy season, consider storing materials in a covered area. Store materials in secondary containments such as an earthen dike, horse trough, or even a children's wading pool for non-reactive materials such as detergents, oil, grease, and paints. Small amounts of material may be secondarily contained in "bus boy" trays or concrete mixing trays.
- Do not store chemicals, drums, or bagged materials directly on the ground. Place these items on a pallet and, when possible, in secondary containment.
- If drums must be kept uncovered, store them at a slight angle to reduce ponding of rainwater on the lids and to reduce corrosion.
- Try to keep chemicals in their original containers, and keep them well labeled.
- Train employees and subcontractors.
- Employees trained in emergency spill cleanup procedures should be present when dangerous materials or liquid chemicals are unloaded.
- If significant residual materials remain on the ground after construction is complete, properly remove materials and any contaminated soil (See CA22). If the area is to be paved, pave as soon as materials are removed to stabilize the soil.

REQUIREMENTS

- Cost (Capital, O&M)
  - All of the above are low cost measures.
- Maintenance
  - Keep the designated storage area clean and well organized.
  - Conduct routine weekly inspections and check for external corrosion of material containers.
  - Keep an ample supply of spill cleanup materials near the storage area.

LIMITATIONS

- Storage sheds often must meet building and fire code requirements.

REFERENCES

Best Management Practices and Erosion Control Manual for Construction Sites; Flood Control District of Maricopa County, AZ, September 1992.

Blueprint for a Clean Bay-Construction-Related Industries: Best Management Practices for Storm Water Pollution Prevention; Santa Clara Valley Nonpoint Source Pollution Control Program, 1992; Santa Clara Valley Nonpoint Source Pollution Control Program, 1992.

Coastal Nonpoint Pollution Control Program: Program Development and Approval Guidance, Working Group Working Paper; USEPA, April 1992.

Storm Water Management for Construction Activities; Developing Pollution Prevention Plans and Best Management Practices, EPA 832-R-92005; USEPA, April 1992.

CA10

Best Management Practices

ACTIVITY: MATERIAL USE

Graphic: North Central Texas COG, 1993

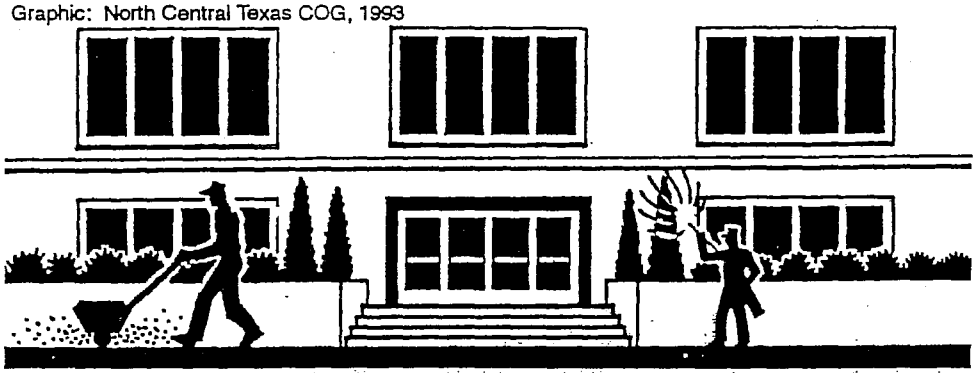

Objectives

- *Housekeeping Practices*
- *Contain Waste*
- *Minimize Disturbed Areas*
- *Stabilize Disturbed Areas*
- *Protect Slopes/Channels*
- *Control Site Perimeter*
- *Control Internal Erosion*

DESCRIPTION

Prevent or reduce the discharge of pollutants to storm water from material use by using alternative products, minimizing hazardous material use on-site, and training employees and subcontractors.

APPROACH

The following materials are commonly used on construction sites:

- Pesticides and herbicides,
- Fertilizers,
- Detergents,
- Plaster and other products,
- Petroleum products such as fuel, oil, and grease, and
- Other hazardous chemicals such as acids, lime, glues, paints, solvents, and curing compounds.

Use of these materials on-site can pose the following risks:

- Storm water pollution,
- Injury to workers or visitors,
- Groundwater pollution, and
- Soil contamination.

Therefore, the following steps should be taken to minimize your risk:

- Use less hazardous, alternative materials as much as possible.
- Minimize use of hazardous materials on-site.
- Use materials only where and when needed to complete the construction activity.
- Follow manufacturer's instructions regarding uses, protective equipment, ventilation, flammability, and mixing of chemicals.
- Personnel who use pesticides should be trained in their use. The California Department of Pesticide Regulation and county agricultural commissioners license pesticide dealers, certify pesticide applicators, and conduct on-site inspections.
- Do not over-apply fertilizers, herbicides, and pesticides. Prepare only the amount needed. Follow the recommended usage instructions. Over-application is expensive and environmentally harmful. Unless on steep slopes, till fertilizers into the soil rather than hydroseeding. Apply surface dressings in several smaller applications, as opposed to one large application, to allow time for infiltration and to avoid excess material being carried off-site by runoff. Do not apply these chemicals just before it rains.
- Train employees and subcontractors in proper material use.

Targeted Pollutants

- ○ *Sediment*
- ◒ *Nutrients*
- ◒ *Toxic Materials*
- ◒ *Oil & Grease*
- ◒ *Floatable Materials*
- ○ *Other Construction Waste*

● *Likely to Have Significant Impact*
○ *Probable Low or Unknown Impact*

Implementation Requirements

- ○ *Capital Costs*
- ○ *O&M Costs*
- ○ Maintenance
- ◒ *Training*
- ○ *Suitability for Slopes >5%*

● *High* ○ *Low*

CA11

Best Management Practices

ACTIVITY: MATERIAL USE (Continue)

REQUIREMENTS

- Costs (Capital, O&M)
  - All of the above are low cost measures.
- Maintenance
  - Maintenance of this best management practice is minimal.

LIMITATIONS

- Alternative materials may not be available, suitable, or effective in every case.

REFERENCES

Blueprint for a Clean Bay-Construction-Related Industries: Best Management Practices for Storm Water Pollution Prevention; Santa Clara Valley Nonpoint Source Pollution Control Program, 1992; Santa Clara Valley Nonpoint Source Pollution Control Program, 1992.

Coastal Nonpoint Pollution Control Program: Program Development and Approval Guidance, Working Group Working Paper; USEPA, April 1992.

Storm Water Management for Construction Activities; Developing Pollution Prevention Plans and Best Management Practices, EPA 832-R-92005; USEPA, April 1992.

CA11

Best Management Practices

ACTIVITY: SPILL PREVENTION AND CONTROL

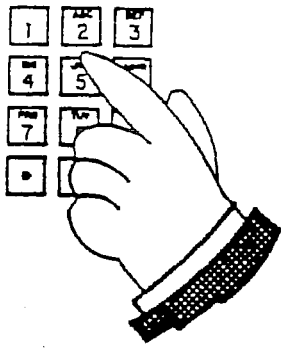

Objectives

- *Housekeeping Practices*
- *Contain Waste*
- *Minimize Disturbed Areas*
- *Stabilize Disturbed Areas*
- *Protect Slopes/Channels*
- *Control Site Perimeter*
- *Control Internal Erosion*

Targeted Pollutants

- ○ *Sediment*
- ○ *Nutrients*
- ◒ *Toxic Materials*
- ◒ *Oil & Grease*
- ○ *Floatable Materials*
- ○ *Other Construction Waste*

- ● *Likely to Have Significant Impact*
- ○ *Probable Low or Unknown Impact*

Implementation Requirements

- ○ *Capital Costs*
- ◒ *O&M Costs*
- ○ *Maintenance*
- ◒ *Training*
- ○ *Suitability for Slopes >5%*

● *High* ○ *Low*

CA12

Best Management Practices

DESCRIPTION

Prevent or reduce the discharge of pollutants to storm water from leaks and spills by reducing the chance for spills, stopping the source of spills, containing and cleaning up spills, properly disposing of spill materials, and training employees.

This best management practice covers only spill prevention and control. However, CA10 (Material Delivery and Storage) and CA11 (Material Use), also contain useful information, particularly on spill prevention. For information on wastes, see the waste management BMPs in this chapter.

APPROACH

The following steps will help reduce the storm water impacts of leaks and spills:

Define "Significant Spill"

- Different materials pollute in different amounts. Make sure that each employee knows what a "significant spill" is for each material they use, and what is the appropriate response for "significant" and "insignificant" spills.

General Measures

- Hazardous materials and wastes should be stored in covered containers and protected from vandalism.
- Place a stockpile of spill cleanup materials where it will be readily accessible.
- Train employees in spill prevention and cleanup.
- Designate responsible individuals.

Cleanup

- Clean up leaks and spills immediately.
- On paved surfaces, clean up spills with as little water as possible. Use a rag for small spills, a damp mop for general cleanup, and absorbent material for larger spills. If the spilled material is hazardous, then the used cleanup materials are also hazardous and must be sent to either a certified laundry (rags) or disposed of as hazardous waste.
- Never hose down or bury dry material spills. Clean up as much of the material as possible and dispose of properly. See the waste management BMPs in this chapter for specific information.

Reporting

- Report significant spills to local agencies, such as the Fire Department; they can assist in cleanup.
- Federal regulations require that any significant oil spill into a water body or onto an adjoining shoreline be reported to the National Response Center (NRC) at 800-424-8802 (24 hour).

ACTIVITY: SPILL PREVENTION AND CONTROL (Continue)

Use the following measures related to specific activities:

Vehicle and Equipment Maintenance

- If maintenance must occur on-site, use a designated area and/or a secondary containment, located away from drainage courses, to prevent the runon of storm water and the runoff of spills.
- Regularly inspect on-site vehicles and equipment for leaks, and repair immediately.
- Check incoming vehicles and equipment (including delivery trucks, and employee and subcontractor vehicles) for leaking oil and fluids. Do not allow leaking vehicles or equipment on-site.
- Always use secondary containment, such as a drain pan or drop cloth, to catch spills or leaks when removing or changing fluids.
- Place drip pans or absorbent materials under paving equipment when not in use.
- Use adsorbent materials on small spills rather than hosing down or burying the spill. Remove the adsorbent materials promptly and dispose of properly.
- Promptly transfer used fluids to the proper waste or recycling drums. Don't leave full drip pans or other open containers lying around.
- Oil filters disposed of in trash cans or dumpsters can leak oil and pollute storm water. Place the oil filter in a funnel over a waste oil recycling drum to drain excess oil before disposal. Oil filters can also be recycled. Ask your oil supplier or recycler about recycling oil filters.
- Store cracked batteries in a non-leaking secondary container. Do this with all cracked batteries, even if you think all the acid has drained out. If you drop a battery, treat it as if it is cracked. Put it into the containment area until you are sure it is not leaking.

Vehicle and Equipment Fueling

- If fueling must occur on-site, use designated areas, located away from drainage courses, to prevent the runon of storm water and the runoff of spills.
- Discourage "topping-off" of fuel tanks.
- Always use secondary containment, such as a drain pan, when fueling to catch spills/leaks.

REQUIREMENTS

- Costs (Capital, O&M)
  - Prevention of leaks and spills is inexpensive. Treatment and/or disposal of contaminated soil or water can be quite expensive.
- Maintenance
  - Keep ample supplies of spill control and cleanup materials on-site, near storage, unloading, and maintenance areas.
  - Update your spill prevention and control plan and stock cleanup materials as changes occur in the types of chemicals on-site.

LIMITATIONS

- If necessary, use a private spill cleanup company.

REFERENCES

Blueprint for a Clean Bay-Construction-Related Industries: Best Management Practices for Storm Water Pollution Prevention; Santa Clara Valley Nonpoint Source Pollution Control Program, 1992; Santa Clara Valley Nonpoint Source Pollution Control Program, 1992.

Storm Water Management for Construction Activities, Developing Pollution Prevention Plans and Best Management Practices, EPA 832-R-92005; USEPA, April 1992.

CA12

Best Management Practices

ACTIVITY: SOLID WASTE MANAGEMENT

Graphic: North Central Texas COG, 1993

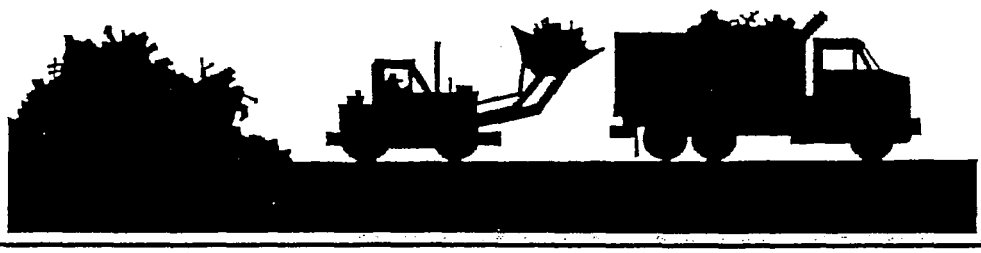

Objectives

Housekeeping Practices

Contain Waste

Minimize Disturbed Areas

Stabilize Disturbed Areas

Protect Slopes/Channels

Control Site Perimeter

Control Internal Erosion

DESCRIPTION

Prevent or reduce the discharge of pollutants to storm water from solid or construction waste by providing designated waste collection areas and containers, arranging for regular disposal, and training employees and subcontractors.

APPROACH

Solid waste is one of the major pollutants resulting from construction. Construction debris includes:

- Solid waste generated from trees and shrubs removed during land clearing, demolition of existing structures (rubble), and building construction;
- Packaging materials including wood, paper and plastic;
- Scrap or surplus building materials including scrap metals, rubber, plastic, glass pieces, and masonry products; and
- Domestic wastes including food containers such as beverage cans, coffee cups, paper bags, and plastic wrappers, and cigarettes.

The following steps will help keep a clean site and reduce storm water pollution:

- Select designated waste collection areas on-site.
- Inform trash hauling contractors that you will accept only water-tight dumpsters for on-site use. Inspect dumpsters for leaks and repair any dumpster that is not water tight.
- Locate containers in a covered area and/or in a secondary containment.
- Provide an adequate number of containers with lids or covers that can be placed over the container to keep rain out or to prevent loss of wastes when it's windy.
- Plan for additional containers and more frequent pickup during the demolition phase of construction.
- Collect site trash daily, especially during rainy and windy conditions.
- Erosion and sediment control devices tend to collect litter. Remove this solid waste promptly.
- Make sure that toxic liquid wastes (used oils, solvents, and paints) and chemicals (acids, pesticides, additives, curing compounds) are not disposed of in dumpsters designated for construction debris.
- Salvage or recycle any useful material. For example, trees and shrubs from land clearing can be used as a brush barrier (see ESC53), or converted into wood chips, then used as mulch on graded areas (see ESC11).
- Do not hose out dumpsters on the construction site. Leave dumpster cleaning to trash hauling contractor.
- Arrange for regular waste collection before containers overflow.

Targeted Pollutants

- ◒ *Sediment*
- ○ *Nutrients*
- ○ *Toxic Materials*
- ○ *Oil & Grease*
- ● *Floatable Materials*
- ● *Other Construction Waste*

● *Likely to Have Significant Impact*
○ *Probable Low or Unknown Impact*

Implementation Requirements

- ○ *Capital Costs*
- ○ *O&M Costs*
- ◒ *Maintenance*
- ◒ *Training*
- ○ *Suitability for Slopes >5%*

● *High* ○ *Low*

CA20

Best Management Practices

- If a container does spill, clean up immediately.
- Make sure that construction waste is collected, removed, and disposed of only at authorized disposal areas.
- Train employees and subcontractors in proper solid waste management.
- For a quick reference on disposal alternatives for specific wastes, see Table 4.2, CA40, Employee/Subcontractor Training.

REQUIREMENTS

- Costs (Capital, O&M)
  - All of the above are low cost measures.
- Maintenance
  - Collect site trash daily.
  - Inspect construction waste area regularly.
  - Arrange for regular waste collection.

LIMITATIONS

- There are no major limitations to this best management practice.

REFERENCES

Best Management Practices and Erosion Control Manual for Construction Sites; Flood Control District of Maricopa County, AZ, September 1992.

Processes, Procedures, and Methods to Control Pollution Resulting from all Construction Activity; USEPA, 430/9-73-007, 1973.

Storm Water Management for Construction Activities, Developing Pollution Prevention Plans and Best Management Practices, EPA 832-R-92005; USEPA, April 1992.

CA20

Best Management Practices

ACTIVITY: HAZARDOUS WASTE MANAGEMENT

Graphic: North Central Texas COG, 1993

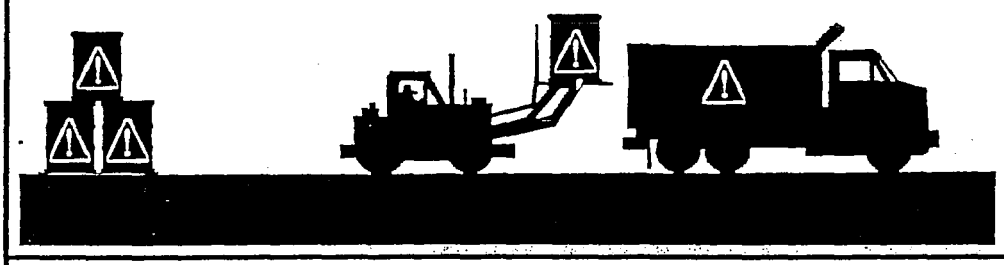

Objectives

Housekeeping Practices

Contain Waste

Minimize Disturbed Areas

Stabilize Disturbed Areas

Protect Slopes/Channels

Control Site Perimeter

Control Internal Erosion

Targeted Pollutants

- ○ *Sediment*
- ○ *Nutrients*
- ◒ *Toxic Materials*
- ○ *Oil & Grease*
- ○ *Floatable Materials*
- ○ *Other Construction Waste*

● *Likely to Have Significant Impact*
○ *Probable Low or Unknown Impact*

Implementation Requirements

- ○ *Capital Costs*
- ○ *O&M Costs*
- ◒ *Maintenance*
- ◒ *Training*
- ○ *Suitability for Slopes >5%*

● *High* ○ *Low*

CA21

Best Management Practices

DESCRIPTION

Prevent or reduce the discharge of pollutants to storm water from hazardous waste through proper material use, waste disposal, and training of employees and subcontractors.

APPROACH

Many of the chemicals used on-site can be hazardous materials which become hazardous waste upon disposal. These wastes may include:

- Paints and solvents;
- Petroleum products such as oils, fuels, and grease;
- Herbicides and pesticides;
- Acids for cleaning masonry; and
- Concrete curing compounds.

In addition, sites with existing structures may contain wastes which must be disposed of in accordance with Federal, State, and local regulations. These wastes include:

- Sandblasting grit mixed with lead-, cadmium-, or chromium-based paints;
- Asbestos; and
- PCBs (particularly in older transformers).

The following steps will help reduce storm water pollution from hazardous wastes:

Material Use

- Use all of the product before disposing of the container.
- Do not remove the original product label, it contains important safety and disposal information.
- Do not over-apply herbicides and pesticides. Prepare only the amount needed. Follow the recommended usage instructions. Over-application is expensive and environmentally harmful. Apply surface dressings in several smaller applications, as opposed to one large application, to allow time for infiltration and to avoid excess material being carried off-site by runoff. Do not apply these chemicals just before it rains. People applying pesticides must be certified in accordance with Federal and State regulations.
- Do not clean out brushes or rinse paint containers into the dirt, street, gutter, storm drain, or stream. "Paint out" brushes as much as possible. Rinse water-based paints to the sanitary sewer. Filter and re-use thinners and solvents. Dispose of excess oil-based paints and sludge as hazardous waste.

Waste Recycling/Disposal

- Select designated hazardous waste collection areas on-site.
- Hazardous materials and wastes should be stored in covered containers and protected from vandalism.
- Place hazardous waste containers in secondary containment.
- Do not mix wastes, this can cause chemical reactions, make recycling impossible, and complicate disposal.
- Recycle any useful material such as used oil or water-based paint.
- Make sure that toxic liquid wastes (used oils, solvents, and paints) and chemicals (acids, pesticides, additives, curing compounds) are not disposed of in dumpsters designated for construction debris.
- Arrange for regular waste collection before containers overflow.
- Make sure that hazardous waste (e.g. excess oil-based paint and sludges) is collected, removed, and disposed of only at authorized disposal areas.
- For a quick reference on disposal alternatives for specific wastes, see Table 4.2, CA40, Employee/Subcontractor Training.

Training

- Train employees and subcontractors in proper hazardous waste management.
- Warning signs should be placed in areas recently treated with chemicals.
- Place a stockpile of spill cleanup materials where it will be readily accessible.
- If a container does spill, clean up immediately.

REQUIREMENTS

- Costs (Capital, O&M)
  - All of the above are low cost measures.
- Maintenance
  - Inspect hazardous waste receptacles and area regularly.
  - Arrange for regular hazardous waste collection.

LIMITATIONS

- Hazardous waste that cannot be reused or recycled must be disposed of by a licensed hazardous waste hauler.

REFERENCES

Blueprint for a Clean Bay-Construction-Related Industries: Best Management Practices for Storm Water Pollution Prevention; Santa Clara Valley Nonpoint Source Pollution Control Program, 1992.

Processes, Procedures, and Methods to Control Pollution Resulting from all Construction Activity; USEPA, 430/9-73-007, 1973.

Storm Water Management for Construction Activities, Developing Pollution Prevention Plans and Best Management Practices, EPA 832-R-92005; USEPA, April 1992.

CA21

Best Management Practices

ACTIVITY: CONTAMINATED SOIL MANAGEMENT

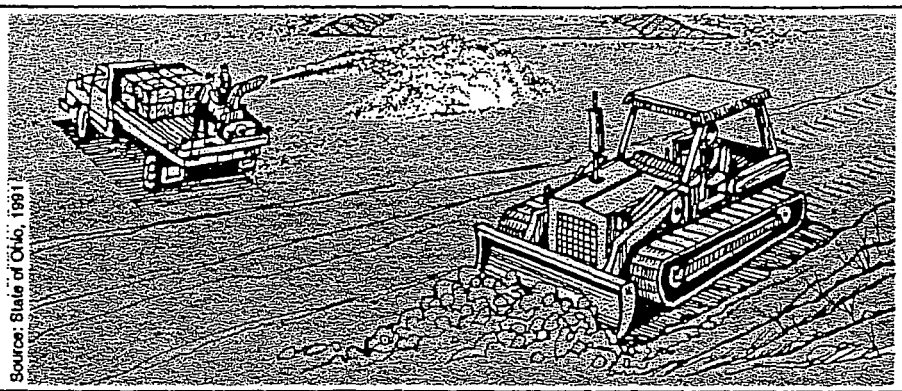
Source: State of Ohio, 1991

Objectives

- Housekeeping Practices
- (Contain Waste)
- (Minimize Disturbed Areas)
- (Stabilize Disturbed Areas)
- Protect Slopes/Channels
- Control Site Perimeter
- Control Internal Erosion

DESCRIPTION

Prevent or reduce the discharge of pollutants to storm water from contaminated soil and highly acidic or alkaline soils by conducting pre-construction surveys, inspecting excavations regularly, and remediating contaminated soil promptly.

APPROACH

Contaminated soils may occur on your site for several reasons including:

- Past site uses and activities;
- Detected or undetected spills and leaks; and
- Acid or alkaline solutions from exposed soil or rock formations high in acid or alkaline-forming elements.

Most developers conduct pre-construction environmental assessments as a matter of routine. Recent court rulings holding contractors liable for cleanup costs when they unknowingly move contaminated soil, highlight the need for contractors to confirm that a site assessment is completed before earth moving begins.

The following steps will help reduce storm water pollution from contaminated soil:

- Conduct thorough site planning including pre-construction geologic surveys.
- Look for contaminated soil as evidenced by discoloration, odors, differences in soil properties, abandoned underground tanks or pipes, or buried debris.
- Prevent leaks and spills to the maximum extent practicable. Contaminated soil can be expensive to treat and/or dispose of properly. However, addressing the problem before construction is much less expensive than after the structures are in place.
- Test suspected soils at a certified laboratory.
- If the soil is contaminated, work with the local regulatory agencies to develop options for treatment and/or disposal.
- For a quick reference on disposal alternatives for specific wastes, see Table 4.2, CA40, Employee/Subcontractor Training.

REQUIREMENTS

- Costs (Capital, O&M)
  - Prevention of leaks and spills is inexpensive. Treatment and/or disposal of contaminated soil can be quite expensive.
- Maintenance
  - Inspect excavated areas daily for signs of contaminated soil.
  - Implement CA12, Spill Prevention and Control, to prevent leaks and spills as much as possible.

Targeted Pollutants

- ◒ Sediment
- ○ Nutrients
- ● Toxic Materials
- ○ Oil & Grease
- ○ Floatable Materials
- ○ Other Construction Waste

● Likely to Have Significant Impact
○ Probable Low or Unknown Impact

Implementation Requirements

- ○ Capital Costs
- ◒ O&M Costs
- ◒ Maintenance
- ◒ Training
- ○ Suitability for Slopes >5%

● High ○ Low

CA22

Best Management Practices

LIMITATIONS

- Contaminated soils that cannot be treated on-site must be disposed of off-site by a licensed hazardous waste hauler.
- The presence of contaminated soil may indicate contaminated water as well. See CA1 (Dewatering Operations) in this chapter for more information.

REFERENCES

Blueprint for a Clean Bay-Construction-Related Industries: Best Management Practices for Storm Water Pollution Prevention; Santa Clara Valley Nonpoint Source Pollution Control Program, 1992.

Processes, Procedures, and Methods to Control Pollution Resulting from all Construction Activity; USEPA, 430/9-73-007, 1973.

Storm Water Management for Construction Activities, Developing Pollution Prevention Plans and Best Management Practices, EPA 832-R-92005; USEPA, April 1992.

ACTIVITY: CONCRETE WASTE MANAGEMENT

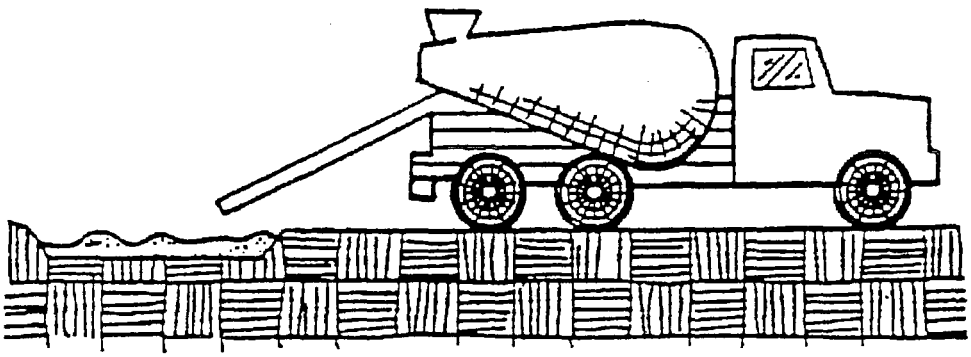

Objectives

- *Housekeeping Practices*
- *Contain Waste*
- *Minimize Disturbed Areas*
- *Stabilize Disturbed Areas*
- *Protect Slopes/Channels*
- *Control Site Perimeter*
- *Control Internal Erosion*

DESCRIPTION

Prevent or reduce the discharge of pollutants to storm water from concrete waste by conducting washout off-site, performing on-site washout in a designated area, and training employees and subcontractors.

APPROACH

The following steps will help reduce storm water pollution from concrete wastes:

- Store dry and wet materials under cover, away from drainage areas.
- Avoid mixing excess amounts of fresh concrete or cement on-site.
- Perform washout of concrete trucks off site or in designated areas only.
- Do not wash out concrete trucks into storm drains, open ditches, streets, or streams.
- Do not allow excess concrete to be dumped on-site, except in designated areas.
- For on-site washout:
  - locate washout area at least 50 feet from storm drains, open ditches, or water bodies. Do not allow runoff from this area by constructing a temporary pit or bermed area large enough for liquid and solid waste;
  - wash out wastes into the temporary pit where the concrete can set, be broken up, and then disposed of properly.
- When washing concrete to remove fine particles and expose the aggregate, avoid creating runoff by draining the water to a bermed or level area.
- Do not wash sweepings from exposed aggregate concrete into the street or storm drain. Collect and return sweepings to aggregate base stock pile, or dispose in the trash.
- Train employees and subcontractors in proper concrete waste management.
- For a quick reference on disposal alternatives for specific wastes, see Table 4.2, CA40, Employee/Subcontractor Training.

REQUIREMENTS

- Costs (Capital, O&M)
  - All of the above are low cost measures.
- Maintenance
  - Inspect subcontractors to ensure that concrete wastes are being properly managed.
  - If using a temporary pit, dispose hardened concrete on a regular basis.

LIMITATIONS

- Off-site washout of concrete wastes may not always be possible.

Targeted Pollutants

- ○ *Sediment*
- ○ *Nutrients*
- ○ *Toxic Materials*
- ○ *Oil & Grease*
- ◒ *Floatable Materials*
- ◒ *Other Construction Waste*

● *Likely to Have Significant Impact*
○ *Probable Low or Unknown Impact*

Implementation Requirements

- ○ *Capital Costs*
- ○ *O&M Costs*
- ◒ *Maintenance*
- ◒ *Training*
- ○ *Suitability for Slopes >5%*

● *High* ○ *Low*

CA23

Best Management Practices

REFERENCES

Best Management Practices and Erosion Control Manual for Construction Sites; Flood Control District of Maricopa County, AZ, July 1992.

Blueprint for a Clean Bay-Construction-Related Industries: Best Management Practices for Storm Water Pollution Prevention; Santa Clara Valley Nonpoint Source Pollution Control Program, 1992.

Storm Water Management for Construction Activities, Developing Pollution Prevention Plans and Best Management Practices, EPA 832-R-92005; USEPA, April 1992.

CA23

Best Management Practices

ACTIVITY: SANITARY/SEPTIC WASTE MANAGEMENT

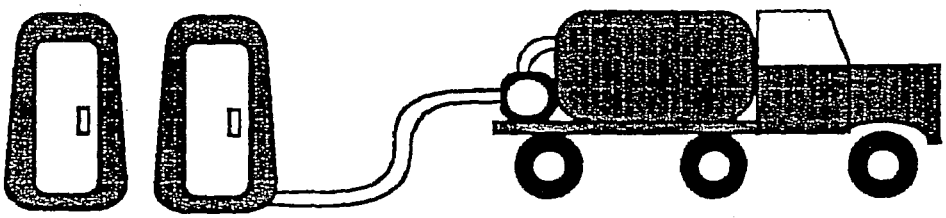

Objectives

- Housekeeping Practices
- (Contain Waste)
- Minimize Disturbed Areas
- Stabilize Disturbed Areas
- Protect Slopes/Channels
- Control Site Perimeter
- Control Internal Erosion

DESCRIPTION

Prevent or reduce the discharge of pollutants to storm water from sanitary/septic waste by providing convenient, well-maintained facilities, and arranging for regular service and disposal.

APPROACH

Sanitary or septic wastes should be treated or disposed of in accordance with State and local requirements. These requirements may include:

- Locate sanitary facilities in a convenient location.
- Untreated raw wastewater should never be discharged or buried.
- Temporary septic systems should treat wastes to appropriate levels before discharging.
- If using an on-site disposal system (OSDS), such as a septic system, comply with local health agency requirements.
- Temporary sanitary facilities that discharge to the sanitary sewer system should be properly connected to avoid illicit discharges.
- If discharging to the sanitary sewer, contact the local wastewater treatment plant for their requirements.
- Sanitary/septic facilities should be maintained in good working order by a licensed service.
- Arrange for regular waste collection by a licensed hauler before facilities overflow.
- For a quick reference on disposal alternatives for specific wastes, see Table 4.2, CA40, Employee/Subcontractor Training.

REQUIREMENTS

- Costs (Capital, O&M)
  - All of the above are low cost measures.
- Maintenance
  - Inspect facilities regularly.
  - Arrange for regular waste collection.

LIMITATIONS

- There are no major limitations to this best management practice.

REFERENCES

Best Management Practices and Erosion Control Manual for Construction Sites; Flood Control District of Maricopa County, AZ, September 1992.

Storm Water Management for Construction Activities, Developing Pollution Prevention Plans and Best Management Practices, EPA 832-R-92005; USEPA, April 1992.

Targeted Pollutants

- ○ Sediment
- ○ Nutrients
- ○ Toxic Materials
- ○ Oil & Grease
- ◒ Other Construction Waste

- ● Likely to Have Significant Impact
- ○ Probable Low or Unknown Impact

Implementation Requirements

- ○ Capital Costs
- ○ O&M Costs
- ◒ Maintenance
- ○ Training
- ○ Suitability for Slopes >5%

● High ○ Low

CA24

Best Management Practices

ACTIVITY: VEHICLE AND EQUIPMENT CLEANING

Graphic: North Central Texas COG, 1993

Objectives

- (●) Housekeeping Practices
- Contain Waste
- Minimize Disturbed Areas
- Stabilize Disturbed Areas
- Protect Slopes/Channels
- (●) Control Site Perimeter
- (●) Control Internal Erosion

DESCRIPTION

Prevent or reduce the discharge of pollutants to storm water from vehicle and equipment cleaning by using off-site facilities, washing in designated, contained areas only, eliminating discharges to the storm drain by infiltrating or recycling the wash water, and/or training employees and subcontractors.

APPROACH

- Use off-site commercial washing businesses as much as possible. Washing vehicles and equipment outdoors or in areas where wash water flows onto paved surfaces or into drainage pathways can pollute storm water. If you wash a large number of vehicles or pieces of equipment, consider conducting this work at an off-site commercial business. These businesses are better equipped to handle and dispose of the wash waters properly. Performing this work off-site can also be economical by eliminating the need for a separate washing operation at your site.
- If washing must occur on-site, use designated, bermed wash areas to prevent wash water contact with storm water, creeks, rivers, and other water bodies. The wash area can be sloped for wash water collection and subsequent infiltration into the ground.
- Use as little water as possible to avoid having to install erosion and sediment controls for the wash area.
- Use phosphate-free, biodegradable soaps.
- Educate employees and subcontractors on pollution prevention measures.
- Do not permit steam cleaning on-site. Steam cleaning can generate significant pollutant concentrations.
- For a quick reference on disposal alternatives for specific wastes, see Table 4.2, CA40, Employee/Subcontractor Training.

REQUIREMENTS

- Costs (Capital, O&M)
  - All of the above are low cost measures.
- Maintenance
  - Minimal, some berm repair may be necessary.

LIMITATIONS

- Even phosphate-free, biodegradable soaps have been shown to be toxic to fish before the soap degrades.
- Sending vehicles/equipment off-site should be done in conjunction with ESC24 (Stabilized Construction Entrance).

REFERENCE

Swisher, R.D., 1987. Surfactant Biodegradation, Marcel Decker Corporation

Targeted Pollutants

- ○ Sediment
- ○ Nutrients
- ◒ Toxic Materials
- ◒ Oil & Grease
- ○ Floatable Materials
- ○ Other Construction Waste

- ● Likely to Have Significant Impact
- ○ Probable Low or Unknown Impact

Implementation Requirements

- ◒ Capital Costs
- ○ O&M Costs
- ◒ Maintenance
- ○ Training
- ○ Suitability for Slopes >5%

● High ○ Low

CA30

Best Management Practices

ACTIVITY: VEHICLE AND EQUIPMENT FUELING

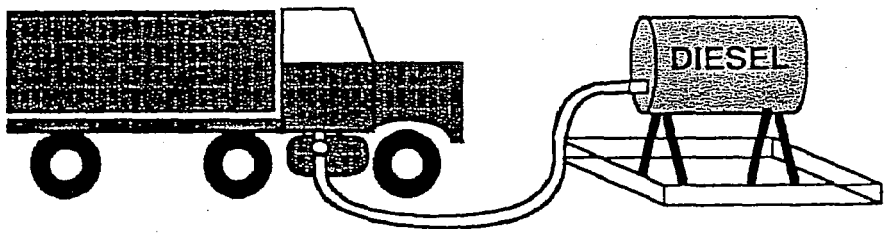

Objectives

- *Housekeeping Practices*
- *Contain Waste*
- *Minimize Disturbed Areas*
- *Stabilize Disturbed Areas*
- *Protect Slopes/Channels*
- *Control Site Perimeter*
- *Control Internal Erosion*

DESCRIPTION

Prevent fuel spills and leaks, and reduce their impacts to storm water by using off-site facilities, fueling in designated areas only, enclosing or covering stored fuel, implementing spill controls, and training employees and subcontractors.

APPROACH

- Use off-site fueling stations as much as possible. Fueling vehicles and equipment outdoors or in areas where fuel may spill/leak onto paved surfaces or into drainage pathways can pollute storm water. If you fuel a large number of vehicles or pieces of equipment, consider using an off-site fueling station. These businesses are better equipped to handle fuel and spills properly. Performing this work off-site can also be economical by eliminating the need for a separate fueling area at your site.
- If fueling must occur on-site, use designated areas, located away from drainage courses, to prevent the runon of storm water and the runoff of spills.
- Discourage "topping-off" of fuel tanks.
- Always use secondary containment, such as a drain pan or drop cloth, when fueling to catch spills/leaks.
- Place a stockpile of spill cleanup materials where it will be readily accessible.
- Use adsorbent materials on small spills rather than hosing down or burying the spill. Remove the adsorbent materials promptly and dispose of properly.
- Carry out all Federal and State requirements regarding stationary above ground storage tanks.
- Avoid mobile fueling of mobile construction equipment around the site; rather, transport the equipment to designated fueling areas. With the exception of tracked equipment such as bulldozers and perhaps forklifts, most vehicles should be able to travel to a designated area with little lost time.
- Train employees and subcontractors in proper fueling and cleanup procedures.
- For a quick reference on disposal alternatives for specific wastes, see Table 4.2, CA40, Employee/Subcontractor Training.

REQUIREMENTS

- Costs (Capital, O&M)
  - All of the above measures are low cost, except for the capital costs of above ground tanks that meet all local environmental, zoning, and fire codes.
- Maintenance
  - Keep ample supplies of spill cleanup materials on-site.
  - Inspect fueling areas and storage tanks on a regular schedule.

LIMITATIONS

- Sending vehicles/equipment off-site should be done in conjunction with ESC24 (Stabilized Construction Entrance).

Targeted Pollutants

- ○ *Sediment*
- ○ *Nutrients*
- ◒ *Toxic Materials*
- ◒ *Oil & Grease*
- ○ *Floatable Materials*
- ○ *Other Construction Waste*

● *Likely to Have Significant Impact*
○ *Probable Low or Unknown Impact*

Implementation Requirements

- ◒ *Capital Costs*
- ○ *O&M Costs*
- ◒ *Maintenance*
- ◒ *Training*
- ○ *Suitability for Slopes >5%*

● *High* ○ *Low*

CA31

Best Management Practices

ACTIVITY: VEHICLE AND EQUIPMENT MAINTENANCE

Graphic: North Central Texas COG, 1993

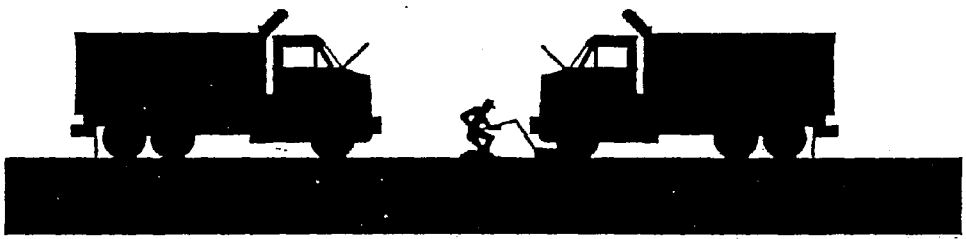

Objectives

- *Housekeeping Practices*
- *Contain Waste*
- *Minimize Disturbed Areas*
- *Stabilize Disturbed Areas*
- *Protect Slopes/Channels*
- *Control Site Perimeter*
- *Control Internal Erosion*

DESCRIPTION

Prevent or reduce the discharge of pollutants to storm water from vehicle and equipment maintenance by running a "dry site". This involves using off-site facilities, performing work in designated areas only, providing cover for materials stored outside, checking for leaks and spills, containing and cleaning up spills immediately, and training employees and subcontractors.

APPROACH

- Keep vehicles and equipment clean, don't allow excessive build-up of oil and grease.
- Use off-site repair shops as much as possible. Maintaining vehicles and equipment outdoors or in areas where vehicle or equipment fluids may spill or leak onto the ground can pollute storm water. If you maintain a large number of vehicles or pieces of equipment, consider using an off-site repair shop. These businesses are better equipped to handle vehicle fluids and spills properly. Performing this work off-site can also be economical by eliminating the need for a separate maintenance area.
- If maintenance must occur on-site, use designated areas, located away from drainage courses, to prevent the runon of storm water and the runoff of spills.
- Always use secondary containment, such as a drain pan or drop cloth, to catch spills or leaks when removing or changing fluids.
- Place a stockpile of spill cleanup materials where it will be readily accessible.
- Use adsorbent materials on small spills rather than hosing down or burying the spill. Remove the adsorbent materials promptly and dispose of properly.
- Regularly inspect on-site vehicles and equipment for leaks, and repair immediately.
- Check incoming vehicles and equipment (including delivery trucks, and employee and subcontractor vehicles) for leaking oil and fluids. Do not allow leaking vehicles or equipment on-site.
- Segregate and recycle wastes, such as greases, used oil or oil filters, antifreeze, cleaning solutions, automotive batteries, hydraulic, and transmission fluids.
- Train employees and subcontractors in proper maintenance and spill cleanup procedures.
- For a quick reference on disposal alternatives for specific wastes, see Table 4.2, CA40, Employee/Subcontractor Training.

REQUIREMENTS

- Costs (Capital, O&M)
  - All of the above are low cost measures.
- Maintenance
  - Keep ample supplies of spill cleanup materials on-site.
  - Inspect maintenance areas on a regular schedule.

Targeted Pollutants

- ○ *Sediment*
- ○ *Nutrients*
- ◒ *Toxic Materials*
- ◒ *Oil & Grease*
- ○ *Floatable Materials*
- ○ *Other Construction Waste*

● *Likely to Have Significant Impact*
○ *Probable Low or Unknown Impact*

Implementation Requirements

- ○ *Capital Costs*
- ○ *O&M Costs*
- ○ *Maintenance*
- ◒ *Training*
- ○ *Suitability for Slopes >5%*

● *High* ○ *Low*

CA32

Best Management Practices

LIMITATIONS

- Sending vehicles/equipment off-site should be done in conjunction with ESC24 (Stabilized Construction Entrance).

Outdoor vehicle or equipment maintenance is a potentially significant source of storm water pollution. Activities that can contaminate storm water include engine repair and service, particularly changing or replacement of fluids, and outdoor equipment storage and parking (dripping engines). For further information on vehicle or equipment servicing, see CA30, Vehicle and Equipment Cleaning, and CA31, Vehicle and Equipment Fueling.

Listed below is further information if you must perform vehicle or equipment maintenance on-site.

Waste Reduction

Parts are often cleaned using solvents such as trichloroethylene, 1,1,1-trichloroethane, or methylene chloride. Many of these parts cleaners are harmful and must be disposed of as a hazardous waste. Reducing the number of solvents makes recycling easier and reduces hazardous waste management costs. Often, one solvent can perform a job as well as two different solvents. Also, if possible, eliminate or reduce the amount of hazardous materials and waste by substituting non-hazardous or less hazardous materials. For example, replace chlorinated organic solvents (1,1,1-trichloroethane, methylene chloride, etc.) with non-chlorinated solvents. Non-chlorinated solvents like kerosene or mineral spirits are less toxic and less expensive to dispose of properly. Check list of active ingredients to see whether it contains chlorinated solvents. The "chlor" term indicates that the solvent is chlorinated. Also, try substituting a wire brush for solvents to clean parts.

Recycling/Disposal

Separating wastes allows for easier recycling and may reduce disposal costs. Keep hazardous and non-hazardous wastes separate, do not mix used oil and solvents, and keep chlorinated solvents (like 1,1,1-trichloroethane) separate from non-chlorinated solvents (like kerosene and mineral spirits). Promptly transfer used fluids to the proper waste or recycling drums. Don't leave full drip pans or other open containers lying around.

Oil filters disposed of in trash cans or dumpsters can leak oil and contaminate storm water. Place the oil filter in a funnel over a waste oil recycling drum to drain excess oil before disposal. Oil filters can also be recycled. Ask your oil supplier or recycler about recycling oil filters.

Do not dispose of extra paints and coatings by dumping liquid onto the ground or throwing it into dumpsters. Allow coatings to dry or harden before disposal into covered dumpsters.

Store cracked batteries in a non-leaking secondary container. Do this with all cracked batteries, even if you think all the acid has drained out. If you drop a battery, treat it as if it is cracked. Put it into the containment area until you are sure it is not leaking.

Do not bury used tires.

REFERENCES

Best Management Practices and Erosion Control Manual for Construction Sites; Flood Control District of Maricopa County, AZ, September 1992.

Blueprint for a Clean Bay-Construction-Related Industries: Best Management Practices for Storm Water Pollution Prevention; Santa Clara Valley Nonpoint Source Pollution Control Program, 1992.

Coastal Nonpoint Pollution Control Program: Program Development and Approval Guidance, Working Group Working Paper; USEPA, April 1992.

CA32

Best Management Practices

ACTIVITY: EMPLOYEE/SUBCONTRACTOR TRAINING

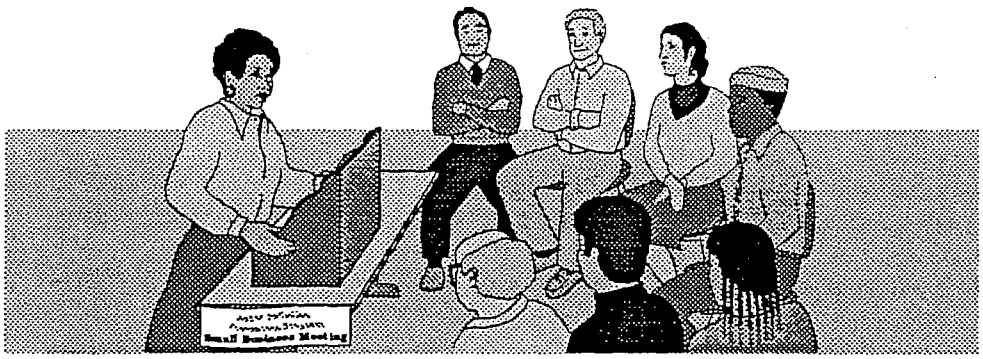

Objectives

- *Housekeeping Practices*
- *Contain Waste*
- *Minimize Disturbed Areas*
- *Stabilize Disturbed Areas*
- *Protect Slopes/Channels*
- *Control Site Perimeter*
- *Control Internal Erosion*

DESCRIPTION

Employee/subcontractor training, like maintenance or a piece of equipment, is not so much a best management practice as it is a method by which to implement BMPs. This fact sheet highlights the importance of training and of integrating the elements of employee/subcontractor training from the individual source controls into a comprehensive training program as part of a company's Storm Water Pollution Prevention Plan (SWPPP).

The specific employee/subcontractor training aspects of each of the source controls are highlighted in the individual fact sheets. The focus of this fact sheet is more general, and includes the overall objectives and approach for assuring employee/subcontractor training in storm water pollution prevention. Accordingly, the organization of this fact sheet differs somewhat from the other fact sheets in this chapter.

OBJECTIVES

Employee/subcontractor training should be based on four objectives:

- Promote a clear identification and understanding of the problem, including activities with the potential to pollute storm water;
- Identify solutions (BMPs);
- Promote employee/subcontractor ownership of the problems and the solutions; and
- Integrate employee/subcontractor feedback into training and BMP implementation.

APPROACH

- Integrate training regarding storm water quality management with existing training programs that may be required for your business by other regulations such as: the Illness and Injury Prevention Program (IIPP) (SB 198) (California Code of Regulations Title 8, Section 3203), the Hazardous Waste Operations and Emergency Response (HAZWOPER) standard (29 CFR 1910.120), the Spill Prevention Control and Countermeasure (SPCC) Plan (40 CFR 112), and the Hazardous Materials Management Plan (Business Plan) (California Health and Safety Code, Section 6.95).
- Businesses, particularly smaller ones that may not be regulated by Federal, State, or local regulations, may use the information in this Handbook to develop a training program to reduce their potential to pollute storm water.
- Use the quick reference on disposal alternatives (Table 4.2) to train employee/subcontractors in proper and consistent methods for disposal.

CA40

Best Management Practices

ACTIVITY: EMPLOYEE/SUBCONTRACTOR TRAINING (Continue)

- Consider posting the quick reference table around the job site or in the on-site office trailer to reinforce training.
- Train employee/subcontractors in standard operating procedures and spill cleanup techniques described in the fact sheets. Employee/subcontractors trained in spill containment and cleanup should be present during the loading/ unloading and handling of materials.
- Personnel who use pesticides should be trained in their use. The California Department of Pesticide Regulation and county agricultural commissioners license pesticide dealers, certify pesticide applicators, and conduct on-site inspections.
- Proper education of off-site contractors is often overlooked. The conscientious efforts of well trained employee/ subcontractors can be lost by unknowing off-site contractors, so make sure they are well informed about what they are expected to do on-site.

CA40

Best Management Practices

TABLE 4.2 QUICK REFERENCE - DISPOSAL ALTERNATIVES
(Adopted from Santa Clara County Nonpoint Source Pollution Control Program - December 1992)

All of the waste products on this chart are prohibited from discharge to the storm drain system. Use this matrix to decide which alternative disposal strategies to use. ALTERNATIVES ARE LISTED IN PRIORITY ORDER.

Key: HHW — Household hazardous waste (Government-sponsored drop-off events)
POTW — Publically Owned Treatment Plant
Reg.Bd. — Regional Water Quality Control Board (Oakland)
"Dispose to sanitary sewer" means dispose into sink, toilet, or sanitary sewer clean-out connection.
"Dispose as trash" means dispose in dumpsters or trash containers for pickup and/or eventual disposal in landfill.
"Dispose as hazardous waste" for business/commercial means contract with a hazardous waste hauler to remove and dispose.

DISCHARGE/ACTIVITY	BUSINESS/COMMERCIAL Disposal Priorities	Approval	RESIDENTIAL Disposal Priorities
General Construction and Painting; Street and Utility Maintenance			
Excess paint (oil-based)	1. Recycle/reuse. 2. Dispose as hazardous waste.		1. Recycle/reuse. 2. Take to HHW drop-off.
Excess paint (water-based)	1. Recycle/reuse. 2. Dry residue in cans, dispose as trash. 3. If volume is too much to dry, dispose as hazardous waste.		1. Recycle/reuse. 2. Dry residue in cans, dispose as trash. 3. If volume is too much to dry, take to HHW drop-off
Paint cleanup (oil-based)	Wipe paint out of brushes, then: 1. Filter & reuse thinners, solvents. 2. Dispose as hazardous waste.		Wipe paint out of brushes, then: 1. Filter & reuse thinners, solvents. 2. Take to HHW drop-off.
Paint cleanup (water-based)	Wipe paint out of brushes, then: 1. Rinse to sanitary sewer.		Wipe paint out of brushes, then: 1. Rinse to sanitary sewer.
Empty paint cans (dry)	1. Remove lids, dispose as trash.		1. Remove lids, dispose as trash.
Paint stripping (with solvent)	1. Dispose as hazardous waste.		1. Take to HHW drop-off.
Building exterior cleaning (high-pressure water)	1. Prevent entry into storm drain and remove offsite 2. Wash onto dirt area, spade in 3. Collect (e.g. mop up) and discharge to sanitary sewer	POTW	
Cleaning of building exteriors which have HAZARDOUS MATERIALS (e.g. mercury, lead) in paints	1. Use dry cleaning methods 2. Contain and dispose washwater as hazardous waste (Suggestion: dry material first to reduce volume)		

DISCHARGE/ACTIVITY	BUSINESS/COMMERCIAL Disposal Priorities	Approval	RESIDENTIAL Disposal Priorities
General Construction and Painting; Street and Utility Maintenance (cont'd)			
Non-hazardous paint scraping/ sand blasting	1. Dry sweep, dispose as trash		1. Dry sweep, dispose as trash
HAZARDOUS paint scraping/sand blasting (e.g. marine paints or paints containing lead or tributyl tin)	1. Dry sweep, dispose as hazardous waste		1. Dry sweep, take to HHW drop-off
Soil from excavations during periods when storms are forecast	1. Should not be placed in street or on paved areas 2. Remove from site or backfill by end of day 3. Cover with tarpaulin or surround with hay bales, or use other runoff controls 4. Place filter mat over storm drain Note: Thoroughly sweep following removal of dirt in all four alternatives.		
Soil from excavations placed on paved surfaces during periods when storms are not forecast	1. Keep material out of storm conveyance systems and thoroughly remove via sweeping following removal of dirt		
Cleaning streets in construction areas	1. Dry sweep and minimize tracking of mud 2. Use silt ponds and/or similar pollutant reduction techniques when flushing pavement		
Soil erosion, sediments	1. Cover disturbed soils, use erosion controls, block entry to storm drain. 2. Seed or plant immediately.		
Fresh cement, grout, mortar	1. Use/reuse excess 2. Dispose to trash		1. Use/reuse excess 2. Dispose as trash
Washwater from concrete/mortar (etc.) cleanup	1. Wash onto dirt area, spade in 2. Pump and remove to appropriate disposal facility 3. Settle, pump water to sanitary sewer	POTW	1. Wash onto dirt area, spade in 2. Pump and remove to appropriate disposal facility 3. Settle, pump water to sanitary sewer
Aggregate wash from driveway/patio construction	1. Wash onto dirt area, spade in 2. Pump and remove to appropriate disposal facility 3. Settle, pump water to sanit wer	POTW	1. Wash onto dirt area, spade in 2. Pump and remove to appropriate disposal facility 3. Settle, pump water to sanitary sew

DISCHARGE/ACTIVITY	BUSINESS/COMMERCIAL Disposal Priorities	Approval	RESIDENTIAL Disposal Priorities
General Construction and Painting; Street and Utility Maintenance (cont'd)			
Rinsewater from concrete mixing trucks	1. Return truck to yard for rinsing into pond or dirt area 2. At construction site, wash into pond or dirt area		
Non-hazardous construction and demolition debris	1. Recycle/reuse (concrete, wood, etc.) 2. Dispose as trash		1. Recycle/reuse (concrete, wood, etc. 2. Dispose as trash
Hazardous demolition and construction debris (e.g. asbestos)	1. Dispose as hazardous waste		1. Do not attempt to remove yourself. Contact asbestos removal service for safe removal and disposal 2. Very small amounts (less than 5 lbs) may be double-wrapped in plastic and taken to HHW drop-off
Saw-cut slurry	1. Use dry cutting technique and sweep up residue 2. Vacuum slurry and dispose off-site. 3. Block storm drain or berm with low weir as necessary to allow most solids to settle. Shovel out gutters; dispose residue to dirt area, construction yard or landfill.		
Construction dewatering (Nonturbid, uncontaminated groundwater)	1. Recycle/Reuse 2. Discharge to storm drain		
Construction dewatering (Other than nonturbid, uncontaminated groundwater)	1. Recycle/reuse 2. Discharge to sanitary sewer 3. As appropriate, treat prior to discharge to storm drain	POTW Reg. Bd.	
Portable toilet waste	1. Leasing company shall dispose to sanitary sewer at POTW	POTW	
Leaks from garbage dumpsters	1. Collect, contain leaking material. Eliminate leak, keep covered, return to leasing company for immediate repair 2. If dumpster is used for liquid waste, use plastic liner		

DISCHARGE/ACTIVITY	BUSINESS/COMMERCIAL Disposal Priorities	Approval	RESIDENTIAL Disposal Priorities
General Construction and Painting; Street and Utility Maintenance (cont'd)			
Leaks from construction debris bins	1. Insure that bins are used for dry nonhazardous materials only (Suggestion: Fencing, covering help prevent misuse)		
Dumpster cleaning water	1. Clean at dumpster owner's facility and discharge waste through grease interceptor to sanitary sewer 2. Clean on site and discharge through grease interceptor to sanitary sewer	POTW POTW	
Cleaning driveways, paved areas * (Special Focus = Restaurant alleys Grocery dumpster areas) * Note: Local drought ordinances may contain additional restrictions	1. Sweep and dispose as trash (Dry cleaning only). 2. For vehicle leaks, restaurant/grocery alleys, follow this 3-step process: a. Clean up leaks with rags or absorbents. b. Sweep, using granular absorbent material (cat litter). c. Mop and dispose of mopwater to sanitary sewer (or collect rinsewater and pump to the sanitary sewer). 3. Same as 2 above, but with rinsewater (2c)(no soap) discharged to storm drain.		1. Sweep and dispose as trash (Dry cleaning only). 2. For vehicle leaks, follow this 3-step process: a. Clean up leaks with rags or absorbents; dispose as hazardous waste. b. Sweep, using granular absorbent material (cat litter). c. Mop and dispose of mopwater to sanitary sewer.
Steam cleaning of sidewalks, plazas * * Note: Local drought ordinances may contain additional restrictions	1. Collect all water and pump to sanitary sewer. 2. Follow this 3-step process: a. Clean oil leaks with rags or adsorbents b. Sweep (Use dry absorbent as needed) c. Use no soap, discharge to storm drain		
Potable water/line flushing Hydrant testing	1. Deactivate chlorine by maximizing time water will travel before reaching creeks		
Super-chlorinated (above 1 ppm) water from line flushing	1. Discharge to sanitary sewer 2. Complete dechlorination required before discharge to storm drain		

DISCHARGE/ACTIVITY	BUSINESS/COMMERCIAL Disposal Priorities	Approval	RESIDENTIAL Disposal Priorities
Landscape/Garden Maintenance			
Pesticides	1. Use up. Rinse containers use rinsewater as product. Dispose rinsed containers as trash 2. Dispose unused pesticide as hazardous waste		1. Use up. Rinse containers, use rinsewater as pesticide. Dispose rinsed container as trash. 2. Take unused pesticide to HHW drop-off
Garden clippings	1. Compost 2. Take to Landfill		1. Compost 2. Dispose as trash.
Tree trimming	1. Chip if necessary, before composting or recycling		1. Chip if necessary, before composting or recycling
Swimming pool, spa, fountain water (emptying)	1. Do not use metal-based algicides (i.e. Copper Sulfate) 2. Recycle/reuse (e.g. irrigation) 3. Determine chlorine residual = 0, wait 24 hours and then discharge to storm drain.	POTW	1. Do not use metal-based algicides (i.e. Copper Sulfate) 2. Recycle/reuse (e.g. irrigation) 3. Determine chlorine residual = 0, wait 24 hours and then discharge to storm drain.
Acid or other pool/spa/fountain cleaning	1. Neutralize and discharge to sanitary sewer	POTW	
Swimming pool, spa filter backwash	1. Reuse for irrigation 2. Dispose on dirt area 3. Settle, dispose to sanitary sewer		1. Use for landscape irrigation 2. Dispose on dirt area 3. Settle, dispose to sanitary sewer
Vehicle Wastes			
Used motor oil	1. Use secondary containment while storing, send to recycler.		1. Put out for curbside recycling pickup where available 2. Take to Recycling Facility or auto service facility with recycling program 3. Take to HHW events accepting motor oil
Antifreeze	1. Use secondary containment while storing, send to recycler.		1. Take to Recycling Facility
Other vehicle fluids and solvents	1. Dispose as hazardous waste		1. Take to HHW event
Automobile batteries	1. Send to auto battery recycler 2. Take to Recycling Center		1. Exchange at retail outlet 2. Take to Recycling Facility or HHW event where batteries are accepted
Motor home/construction trailer waste	1. Use holding tank. Dispose to sanitary sewer		1. Use holding tank, dispose to sanitary sewer.

DISCHARGE/ACTIVITY	BUSINESS/COMMERCIAL Disposal Priorities	Approval	RESIDENTIAL Disposal Priorities
Vehicle Wastes (cont'd)			
Vehicle Washing	1. Recycle 2. Discharge to sanitary sewer, never to storm drain	POTW	1. Take to Commercial Car Wash. 2. Wash over lawn or dirt area 3. If soap is used, use a bucket for soapy water and discharge remaining soapy water to sanitary sewer.
Mobile Vehicle Washing	1. Collect washwater and discharge to sanitary sewer.	POTW	
Rinsewater from dust removal at new car fleets	1. Discharge to sanitary sewer 2. If rinsing dust from exterior surfaces from appearance purposes, use no soap (water only); discharge to storm drain.	POTW	
Vehicle leaks at Vehicle Repair Facilities	Follow this 3-step process: 1. Clean up leaks with rags or absorbents 2. Sweep, using granular absorbent material (cat litter) 3. Mop and dispose of mopwater to sanitary sewer.		
Other Wastes			
Carpet cleaning solutions & other mobile washing services	1. Dispose to sanitary sewer	POTW	1. Dispose to sanitary sewer
Roof drains	1. If roof is contaminated with industrial waste products, discharge to sanitary sewer 2. If no contamination is present, discharge to storm drain		
Cooling water Air conditioning condensate	1. Recycle/reuse 2. Discharge to sanitary sewer	POTW	
Pumped groundwater, infiltration/ foundation drainage (contaminated)	1. Recycle/reuse (landscaping, etc.) 2. Treat if necessary; discharge to sanitary sewer 3. Treat and discharge to storm drain	Reg. Bd. POTW Reg. Bd.	
Fire fighting flows	If contamination is present, Fire Dept. will attempt to prevent flow to stream or storm drain		

DISCHARGE/ACTIVITY	BUSINESS/COMMERCIAL Disposal Priorities	Approval	RESIDENTIAL Disposal Priorities
Other Wastes (cont'd)			
Kitchen Grease	1. Provide secondary containment, collect, send to recyler. 2. Provide secondary containment, collect, send to POTW via hauler.	POTW	1. Collect, solidify, dispose as trash
Restaurant cleaning of floor mats, exhaust filters, etc.	1. Clean inside building with discharge through grease trap to sanitary sewer. 2. Clean outside in container or bermed area with discharge to sanitary sewer.		
Clean-up wastewater from sewer back-up	1. Follow this procedure: a. Block storm drain, contain, collect, and return spilled material to the sanitary sewer. b. Block storm drain, rinse remaining material to collection point and pump to sanitary sewer. (no rinse-water may flow to storm drain)		

5. *BMPs FOR EROSION AND SEDIMENTATION CONTROL*

INTRODUCTION

This chapter describes specific Best Management Practices (BMPs) for common construction activities that result in erosion of the construction site and the generation of sediment which impacts waterways and off-site property. Chapter 2 led you through the steps of identifying activities at your site that can cause erosion, while Chapter 3 provided guidance with BMP selection. This chapter will provide you with the BMPs that best fit your site's needs.

Each fact sheet contains a cover sheet with:

- A description of the BMP
- Suitable Applications
- Installation/Application Criteria
- Requirements
  - Costs, including capital costs, and operations and maintenance (O&M)
  - Maintenance (including administrative and staffing)
- Limitations

The side bar presents information on which BMP objective applies, targeted constituents, and an indication of the level of effort and costs to implement. The remainder of the fact sheet provides further information on some or all of these topics, and provides references for additional guidelines.

BMPs for Erosion and Sedimentation Control

Site Planning Considerations
- ESC1 Scheduling
- ESC2 Preservation of Existing Vegetation

Vegetative Stabilization
- ESC10 Seeding and Planting
- ESC11 Mulching

Physical Stabilization
- ESC20 Geotextiles and Mats
- ESC21 Dust Control
- ESC22 Temporary Stream Crossing
- ESC23 Construction Road Stabilization
- ESC24 Stabilized Construction Entrance

Diversion of Runoff
- ESC30 Earth Dike
- ESC31 Temporary Drains and Swales
- ESC32 Slope Drain

Velocity Reduction
- ESC40 Outlet Protection
- ESC41 Check Dams
- ESC42 Slope Roughening/Terracing

Sediment Trapping/Filtering
- ESC50 Silt Fence
- ESC51 Straw Bale Barrier
- ESC52 Sand Bag Barrier
- ESC53 Brush or Rock Filter
- ESC54 Storm Drain Inlet Protection
- ESC55 Sediment Trap
- ESC56 Sediment Basin

Sizing and design criteria for erosion and sedimentation control may be standardized for each local area. This handbook cannot develop specific sizing criteria for all topographies and climates in California. Many local agencies have developed such criteria and should be consulted before sizing specific BMPs. A common design storm for sizing temporary erosion and sedimentation controls is a two-year, 24-hour storm. Sizing criteria given in this handbook assume that such a storm would result in 0.042 ac-ft/ac. of runoff (0.5 inches of runoff). This should be appropriate for sizing controls in most areas. Keep in mind that these controls must also be able to safely contain or

convey storms larger than the design storm for erosion and sediment control.

These BMP fact sheets are suitable for inclusion in many SWPPPs for erosion and sedimentation control. They may be used to supplement and provide details for erosion and sedimentation controls shown on the project site map. In all cases, however, local erosion and sedimentation criteria and standards supersede the suggested criteria on these fact sheets.

BMPs fact sheets are provided for each of the following BMP categories, and are consistent with Worksheet 5 in Chapter 2.

TABLE 5.1 EROSION AND SEDIMENT CONTROL AND BMP OBJECTIVES

	BMP CATEGORY	BMP OBJECTIVES						
		PRACTICE GOOD HOUSE-KEEPING	CONTAIN WASTE	MINIMIZE DISTURBED AREA	STABILIZE DISTURBED AREA	PROTECT SLOPES AND CHANNELS	CONTROL SITE PERIMETER	CONTROL INTERNAL EROSION
	Site Planning Considerations							
ESC1	Scheduling	✓	✓	✓	✓	✓	✓	✓
ESC2	Preservation of Existing Vegetation			✓	✓	✓	✓	
	Vegetative Stabilization							
ESC10	Seeding and Planting				✓	✓		
ESC11	Mulching				✓	✓		
	Physical Stabilization							
ESC20	Geotextiles and Mats				✓	✓		
ESC21	Dust Control	✓		✓	✓		✓	
ESC22	Temporary Stream Crossing	✓		✓	✓	✓		
ESC23	Construction Road Stabilization	✓		✓	✓	✓		
ESC24	Stabilized Construction Entrance	✓		✓	✓		✓	
	Diversion of Runoff							
ESC30	Earth Dike		✓			✓	✓	✓
ESC31	Temporary Drains and Swales					✓	✓	✓
ESC32	Slope Drain					✓		
	Velocity Reduction							
ESC40	Outlet Protection					✓		
ESC41	Check Dams (see ESC 53 also)					✓		
ESC42	Slope Roughening/Terracing				✓	✓		

BMP CATEGORY		BMP OBJECTIVES						
		PRACTICE GOOD HOUSE-KEEPING	CONTAIN WASTE	MINIMIZE DISTURBED AREA	STABILIZE DISTURBED AREA	PROTECT SLOPES AND CHANNELS	CONTROL SITE PERIMETER	CONTROL INTERNAL EROSION
	Sediment Trapping/Filtering							
ESC50	Silt Fence						✓	✓
ESC51	Straw Bale Barrier						✓	✓
ESC52	Sand Bag Barrier					✓	✓	✓
ESC53	Brush or Rock Filter					✓	✓	✓
ESC54	Storm Drain Inlet Protection						✓	✓
ESC55	Sediment Trap							✓
ESC56	Sediment Basin							✓

BMP: SCHEDULING

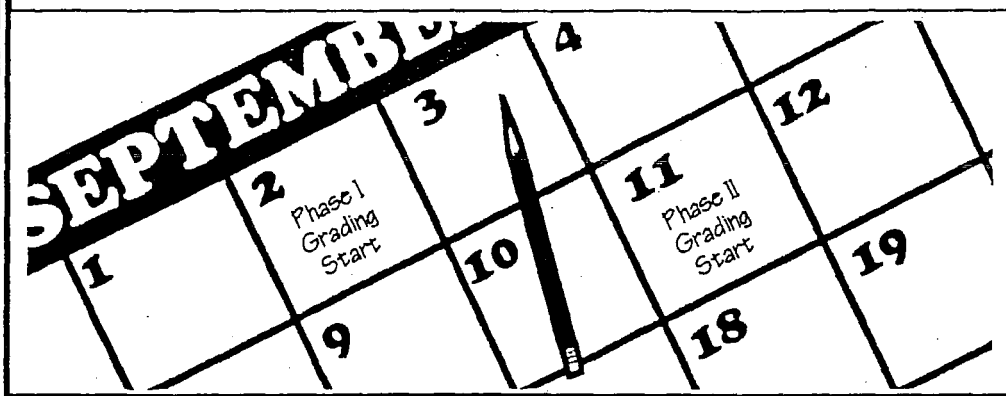

Objectives

- Housekeeping Practices
- Contain Waste
- Minimize Disturbed Areas
- Stabilize Disturbed Areas
- Protect Slopes/Channels
- Control Site Perimeter
- Control Internal Erosion

DESCRIPTION

Sequencing the construction project to reduce the amount and duration of soil exposed to erosion by wind, rain, runoff, and vehicle tracking.

SUITABLE APPLICATIONS

Proper sequencing of construction activities to reduce erosion potential should be incorporated into the schedule of every construction project. Use of other, more costly yet less effective, erosion and sedimentation controls, may often be reduced through proper construction sequencing.

APPROACH

- Project design considerations: Design project to integrate into existing land contours. Significant regrading of a site will require more costly erosion and sedimentation control measures and may require that on-site drainage facilities be installed.
- Incorporate existing, natural areas: Inventory and evaluate the existing site terrain and vegetation. Disturbance of highly erosive natural areas (e.g., steep, unstable slope areas, watercourses) should be minimized, while protecting other areas may enhance site aesthetics. Construction should not disturb these areas (see ESC2).
- Avoid rainy periods: Schedule major grading operations during dry months. Allow enough time before rainfall begins to stabilize the soil with vegetation or physical means (see ESC 10 to 24) or to install temporary sediment trapping devices (see ESC 50 to 56).
- Practice erosion and sediment control year round: Erosion may be caused during dry seasons by "freak" rainfall, wind and vehicle tracking. Therefore, keep the site stabilized year-round, and retain wet season sediment trapping devices.
- Minimize soil exposed at one time! Schedule projects to disturb only small portions of the site at any one time. Complete grading as soon as possible. Immediately stabilize the disturbed portion before grading the next portion. Practice staged seeding—revegetate cut and fill slopes as the work progresses.
- Trenching: Close and stabilize open trenches as soon as possible. Sequence trenching projects so that most open portions of the trench are closed before new trenching is begun.

REQUIREMENTS

- Cost
  - Construction scheduling to reduce erosion may increase other construction costs due to reduced economies of scale in performing site grading. The cost-effectiveness of scheduling techniques should be compared with the other, less effective erosion and sedimentation controls to achieve a cost-effective balance.

Targeted Pollutants

- ○ Sediment
- ○ Nutrients
- ○ Toxic Materials
- ○ Oil & Grease
- ○ Floatable Materials
- ○ Other Construction Waste

- ● Likely to Have Significant Impact
- ○ Probable Low or Unknown Impact

Implementation Requirements

- ○ Capital Costs
- ○ O&M Costs
- ○ Maintenance
- ○ Training
- ○ Suitibility for Slopes >5%

● High ○ Low

ESC1

Best Management Practices

LIMITATIONS

There are no significant limitations to the use of this BMP.

REFERENCES

Best Management Practices and Erosion Control Manual for Construction Sites, Flood Control District of Maricopa County, Arizona - 1992.

Erosion and Sediment Control Guidelines for Developing Areas in Texas, U.S. Department of Agriculture, Soil Conservation Service, Fort Worth, Texas - 1976.

Storm Water Management for Construction Activites. Developing Pollution Prevention Plans and Best Management Practices, U.S. Environmental Protection Agency, Office of Water (EPA 832-R-92-005) - September, 1992.

Virginia Erosion and Sediment Control Handbook, Third Edition, Virginia Department of Conservation and Recreation, Division of Soil and Water Conservation - 1992.

ESC1

Best Management Practices

BMP: PRESERVATION OF EXISTING VEGETATION

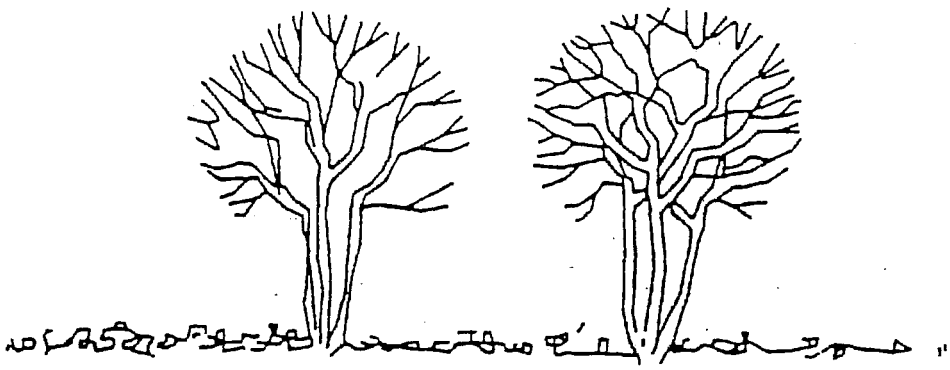

Objectives

- Housekeeping Practices
- Contain Waste
- Minimize Disturbed Areas
- Stabilize Disturbed Areas
- Protect Slopes/Channels
- Control Site Perimeter
- Control Internal Erosion

GENERAL DESCRIPTION

Carefully planned preservation of existing vegetation minimizes the potential of removing or injuring existing trees, vines, shrubs and/or grasses that serve as erosion controls.

SUITABLE APPLICATIONS

- Areas within site where no construction activity occurs, or occurs at a later date.
- Sensitive areas where natural vegetation exist and should be preserved, such as: steep slopes, watercourses, and building sites in wooded areas.
- Areas where local, state and federal government requires preservation, such as: vernal pools, wetlands, marshes, certain oak trees, etc.

INSTALLATION/APPLICATION CRITERIA

- Clearly mark, flag or fence vegetation or areas where vegetation should be preserved.
- Prepare landscaping plans which include as much existing vegetation as possible and state proper care of this vegetation both during and after construction.
- Define and protect with berms, fencing, signs, etc., a setback area from vegetation to be preserved. Setback area size should be based on the location, species, size, age and potential impact of adjacent construction activities or permanent improvements.
- Proposed landscaping plans which do not include plant species that compete with the existing vegetation.
- Do not locate construction traffic routes, spoil piles, etc., where significant adverse impact on existing vegetation may occur.

REQUIREMENTS

- Maintenance
  - Inspection and maintenance requirements for protection of vegetation are low.
  - During construction the limits of grading or disturbance should be clearly marked at all times.
  - Irrigation or maintenance of native trees or vegetation should conform to specifications on the Landscape Plan.
- Cost
  - There is little cost associated with preserving existing vegetation if properly planned during the project design, and may yield aesthetic benefits which enhance property values.

LIMITATIONS

- Requires forward planning by the owner/developer, contractor and design staff.
- For sites with diverse topography, it is often difficult and expensive to save existing trees while grading the site satisfactorily for the planned development.

Targeted Pollutants

- ● Sediment
- ○ Nutrients
- ○ Toxic Materials
- ○ Oil & Grease
- ○ Floatable Materials
- ○ Other Construction Waste

● Likely to Have Significant Impact
○ Probable Low or Unknown Impact

Implementation Requirements

- ○ Capital Costs
- ○ O&M Costs
- ○ Maintenance
- ○ Training
- ● Suitability for Slopes >5%

● High ○ Low

ESC2

Best Management Practices

Additional Information — Preservation of Existing Vegetation

The best way to prevent excessive erosion is to not disturb the land. On a construction site, where extensive land disturbance is necessary, a reasonable BMP would be to not disturb land in sensitive areas of the site which need not be altered for the project to be viable (e.g., natural watercourses, steep slopes), and to design the site to incorporate particularly unique or desireable existing vegetation into the site landscaping plan. Clearly marking and leaving a buffer area around these unique areas will both help to preserve these areas as well as take advantage of natural erosion prevention and sediment trapping in naturally vegetated areas.

Existing vegetation to be preserved on the site must be protected from mechanical and other injury while the land is being developed. The purpose of protecting existing vegetation is to insure the survival of desirable vegetation for shade, beautification, and erosion protection. Mature vegetation has extensive root systems that help to hold soil in place, thus reducing erosion. Also, vegetation helps to keep soil from drying rapidly and becoming susceptible to erosion. To effectively save existing vegetation, no disturbances of any kind should be allowed within a defined area around the vegetation. For trees, no construction activity should occur within the drip line of the tree.

The following criteria may be used for deciding which vegetation will remain on the site:

- Aesthetic values: Consideration should be given to foliage, flowering habits, bark and crown characteristics (for trees).
- Freedom from disease and rot.
- Life span of trees: Short-lived trees need not be preserved.
- Environmental values: Habitat; screening; and buffers.
- Sudden exposure: Save vegetation which grows in direct sunlight and is able to withstand radiated heat from proposed buildings and pavement.
- Space needed: Sufficient space must be provided between the vegetation and any structures, electric and telephone lines, water and sewer lines, driveways and streets. Mark trees and shrubs with bright paint or ribbon so there is no doubt as to which trees and shrubs are to be left and protected from damage during construction.

Saving existing vegetation and mature trees on-site, beautifies the area and may save money by reducing new landscaping requirements. Mature trees also increase property values and satisfy consumer aesthetic needs.

Preserving and protecting existing vegetation can often result in more stable soil conditions during construction. Careful site planning and identification of plantings to preserve can provide erosion and sedimentation controls during construction, and contribute to the aesthetics of the development. For example, in Sacramento County a tree ordinance has been adopted that protects the native California Oak tree. Provisions to protect the tree and its root system during construction must be specified in the project plans, and an area must be provided where the soil stability may not be disturbed. No grading or construction storage within the tree dripline is allowed.

Installation/Application

Building sites may be planned to integrate existing vegetation and trees. Construction impacts must be considered. Trench width for pipe construction projects and the location of permanent structures, such as buildings, needs to be considered when preserving existing vegetation, including mature trees and their root system. Native vegetation should be preserved since it is able to adapt to the climate. The USDA Soil Conservation Service should be contacted about existing vegetation for sites throughout California. Mature trees are generally preferable to newly planted trees because of the greater soil stabilization provided by the extensive root system of a mature tree.

ESC2

Best Management Practices

Additional Information — Preservation of Existing Vegetation

Methods for protecting existing vegetation and trees:

- Stake off root system limits (drip line of tree). Some counties limit construction within 5 feet of the tree drip line.
- Fence off the area to be preserved or along the tree drip line.
- Flag or mark trees to remain in place.
- Tree wells and retaining walls (permanent) help preserve existing vegetation, but must be large enough to protect the root system (see below).
- For the California Oak tree, no trenching or irrigation should be allowed within the driplines of the tree, since both these activities are detrimental to the preservation of the tree.
- Where grading under trees is necessary, excavation and fill should be limited to 1 foot within the driplines.

REFERENCES

Best Management Practices and Erosion Control Manual for Construction Sites, Flood Control District of Maricopa County, Arizona, September 1992.

County of Sacramento Tree Preservation Ordinance - September 1981.

Stormwater Management Water for the Puget Sound Basin, Washington State Department of Ecology, The Technical Manual - February 1992, Publication # 91-75.

Water Quality Management Plan for the Lake Tahoe Region, Volume II, Handbook of Management Practices, Tahoe Regional Planning Agency - November 1988.

ESC2

Best Management Practices

BMP: SEEDING AND PLANTING

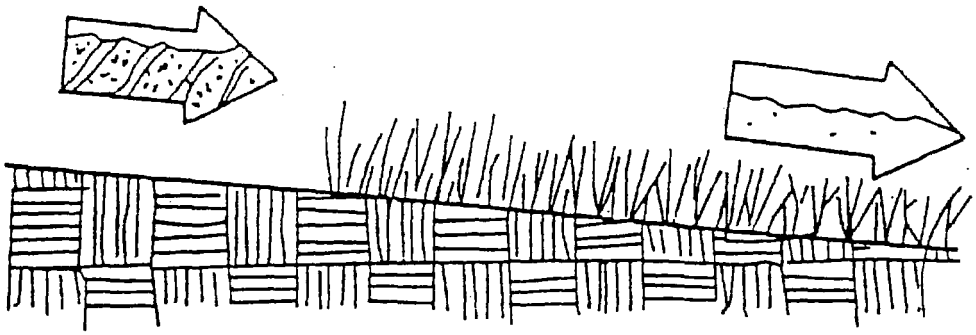

Objectives

- Housekeeping Practices
- Contain Waste
- Minimize Disturbed Areas
- Stabilize Disturbed Areas
- Protect Slopes/Channels
- Control Site Perimeter
- Control Internal Erosion

GENERAL DESCRIPTION

Seeding of grasses and plantings of trees, shrubs, vines and ground covers provide long-term stabilization of soil. In some areas, with suitable climates, grasses can be planted for temporary stabilization.

SUITABLE APPLICATIONS

- Appropriate for site stabilization both during construction and post-construction.
- Any graded/cleared areas where construction activities have ceased.
- Open space cut and fill areas.
- Steep slopes.
- Spoil piles.
- Vegetated swales.
- Landscape corridors.
- Stream banks.

INSTALLATION/APPLICATION CRITERIA

Type of vegetation, site and seedbed preparation, planting time, fertilization and water requirements should be considered for each application.

Grasses:

- Ground preparation: fertilize and mechanically stabilize the soil.
- Tolerant of short-term temperature extremes and waterlogged soil conditions.
- Appropriate soil conditions: shallow soil base, good drainage, slope 2:1 or flatter.
- Develop well and quickly from seeds.
- Mowing, irrigating, and fertilizing are vital for promoting vigorous grass growth.

Trees and Shrubs:

- Selection Criteria: vigor, species, size, shape & wildlife food source.
- Soil conditions: select species appropriate for soil,drainage & acidity.
- Other Factors: wind/exposure, temperature extremes, and irrigation needs.

Vines and Ground Covers:

- Ground preparation: lime and fertilizer preparation.
- Use proper seeding rates.
- Appropriate soil conditions: drainage, acidity, slopes.
- Generally avoid species requiring irrigation.

Targeted Pollutants

- ● Sediment
- ◒ Nutrients
- ◒ Toxic Materials
- ○ Oil & Grease
- ○ Floatable Materials
- ○ Other Construction Waste

● Likely to Have Significant Impact
○ Probable Low or Unknown Impact

Implementation Requirements

- ◒ Capital Costs
- ◒ O&M Costs
- ◒ Maintenance
- ◒ Training
- ◒ Suitability for Slopes >5%

● High ○ Low

ESC10

Best Management Practices

BMP: SEEDING AND PLANTING (Continue)

REQUIREMENTS

- Maintenance
  - Shrubs and trees must be adequately watered and fertilized and if needed pruned.
  - Grasses may need to be watered and mowed.
- Cost: Average annual cost for installation and maintenance (2 year useful life, source: EPA, 1992)
  - Seeding: $300 per acre, appropriate for flat slopes and stable soils.
  - Seeding with Mulching: $1,100 per acre, appropriate for moderate to steep slopes and/or erosive soils.
  - Trees, shrubs, vines, and ground cover: Cost, applicability based on species used and terrain features.

LIMITATIONS

- Permanent and temporary vegetation may not be appropriate in dry periods without irrigation.
- Fertilizer requirements may have potential to create storm water pollution if improperly applied.

ESC10

Best Management Practices

Additional Information — Seeding and Planting

Permanent seeding of grasses, sodding, and planting of trees, shrubs, vines and ground covers can provide long-term stabilization of soil. Permanent seeding and planting contributes to long-term site aesthetics and helps reduce erosion by reducing the velocity of runoff, allowing infiltration to occur, filtering sediments, and by holding soil particles in place.

Seeding and planting should be applied as soon as final grading is done to all graded and cleared areas of the construction site where plant cover is ultimately desired. For example, vegetation may be established along landscaped corridors and buffer zones where they may act as filter strips (see TC6 in Chapter 5 of the Municipal Handbook). Additionally, vegetated swales, steep and/or rocky slopes and stream banks can also serve as appropriate areas for seeding and plantings.

Installation/Application Criteria

Application of appropriate vegetation must consider: the seedbed or plantbed, proper seasonal planting times, water requirements fertilizer requirements and availability of the selected vegetation within the project's region. Permanent plantings during the construction stage of projects require careful coordination between the local agency inspectors, project managers, construction managers, and landscape contractor. Protocols for coordination and implementation procedures regarding site access, construction staging, and short- and long-term planting areas should be developed prior to the construction bid process. Where possible, these protocols should be established by and remain the responsibility of the site owner.

Because of the many available types of plants and ground covers and because site conditions and land use vary so widely within California, a set of general guidelines is included for installation/application of grasses, trees and shrubs, vines and ground covers. However, your local municipality, Soil Conservation Service, agricultural extention, or other resources should be consulted on appropriate species, planting requirements, and maintenance needs for your climate and soils.

Grasses

Grasses, depending on the type, provide short-term soil stabilization during construction or can serve as long- term/ permanent soil stabilization for disturbed areas. In general, grasses provide low maintenance to areas that have been cleared, graded and mechanically stabilized.

Selection:

The selection of the grass type is determined by the climate, irrigation, mowing frequency, maintenance effort and soil-bed conditions. Although grasses provide quick germination and rapid growth, they also have a shallow root system and are not as effective in stabilizing deep soils, where trees, shrubs and deep rooted ground covers may be more appropriate. Several grasses are adaptable to the various California climates. The figure at the end of these fact sheets shows appropriate grasses for regions within California. Blue grass is well adapted throughout California except for in the valley regions. The blue grass is found on dry, sandy soils that have good drainage. Bermuda grass, on the other hand is well adapted in the valley region where soils are dry, coarse and heavier. Specific seed mix and/or varieties for each site should be provided by an approved/qualified plant materials specialist.

ESC10

Best Management Practices

Additional Information — Seeding and Planting

Planting:
The following steps should be followed to ensure established growth:

1. Select the proper grass for the site.
2. Prepare the seedbed; soil should be fertilized and contain good topsoil or soil at least a 2:1 or flatter slope.
3. Broadcast the seedings in the late fall or early spring. In the late fall, seedings should be planted by mid- September to have established grass by the October rainy season.
4. Initial irrigation will be required often for most grasses, with follow-up irrigation and fertilization as needed. Mulching may be required in dry climates or during drought years.

Trees & Shrubs

Selection:
Trees and shrubs, when properly selected, are low maintenance plantings that stabilize adjacent soils, moderate the adjacent temperatures, filter air pollutants, and serve as a barrier to wind. Some desirable characteristics to consider in selecting trees and shrubs include: vigor, species, age, size and shape, and use as a wildlife food source and habitat.

Trees and shrubs to be saved should be clearly marked so that no construction activity will take place within the dripline of the plant. The sites for new plantings should be evaluated. Consider the prior use of the land: adverse soil conditions such as poor drainage or acidity; exposure to wind; temperature extremes; location of utilities, paved areas, and security lighting and traffic problems.

Transplanting:
Time of Year - Late fall through winter (November to February) is the preferred time for transplanting in most of California.

Preparation - Proper digging of a tree/shrub includes the conservation of as much of the root system as possible. Soil adhering to the roots should be damp when the tree is dug, and kept moist until re-planting. The soil ball should be 12 inches in diameter for each inch of diameter of the trunk.

Site preparation - Refer to landscape plans and specifications for site and soil preparation, and for ability to coordinate construction strategy with permanent vegetation.

Supporting the trunk - Many newly planted trees/shrubs need artificial support to prevent excessive swaying.

Watering - Soil around the tree should be thoroughly watered after the tree is set in place. When the soil becomes dry, the tree should be watered deeply, but not often. Mulching around the base of the tree is helpful in preventing roots from drying out.

Vines & Ground Covers

Selection:
Vines, ground covers, and low growing plants, that can quickly spread, come in many types, colors, and growth habits. Some are suitable only as part of a small maintained landscape area, while some can stabilize large areas with little maintenance. Flowers, which provide little long-term erosion control may be planted to add color and varietal appearances.

ESC10

Best Management Practices

Additional Information — Seeding and Planting

Caution should be exercised in the non-native vegetation because of impacts to native vegetation on adjacent lands. For example, species that may be planted at the construction site can quickly spread and compete with originally undisturbed vegetation such as the California Poppy and California buckwheat, both of which complete poorly with introduced grasses (e.g., planting wild oats is illegal in California). In addition to stabilizing disturbed soil, vines and ground covers can perform the following functions:

1. Provide attractive cover that does not need mowing.
2. Help to define traffic areas and control pedestrian movement.

Site Preparation:
Ground covers are plants that naturally grow very close together, causing severe competition for space nutrients and water. Soil for ground covers should be well prepared. The entire area should be spaded, disced, or rototilled to a depth of six to eight inches. Two to three inches of organic material, such as good topsoil or peat, should be spread over the entire area.

Planting:
The following steps will help ensure good plant growth.

1. Make the plantings following the contours of the land.
2. Dig the holes 1/3 larger than the plant root ball.
3. Know what depth to place the plants.
4. Use good topsoil or soil mixture with a lot of organic matter.
5. Fill hole 1/3 to 1/2 full, shake plants to settle soil among roots, then water.
6. Leave saucer-shaped depression around the plant to hold water.
7. Water thoroughly and regularly.
8. Space plants according to the type of plant and the extent of covering desired.

Materials:
There are many different species of vines and ground covers from which to choose, but care must be taken in their selection. It is essential to select planting materials suited to both the intended use and specific site characteristics. The plants discussed in this handbook are those which are known to be adapted to California, and commonly available from commercial nurseries. Additional information can be obtained from local nurserymen, landscape architects, and extension agents. An approved low water use plant list may be obtained from the State Department of Water Resources or the Soils Conservation Service.

Requirements
Maintenance

General requirements include:

- Grass maintenance should be minimal to none. Irrigation and regular fertilizing may be required for some types of grasses. Mowing is only required in areas where aesthetics or fire hazards are a concern.
- Young trees should receive an inch of water each week for the first two years after planting. The tree should be watered deeply, but not more often than once per week.
- Transplanted trees should be fertilized on an annual basis.
- Proper pruning, watering, and application of fertilizer is necessary to maintain healthy and vigorous shrubs. A heavy layer of mulch applied around the shrubs reduces weeds and retains moisture.
- Trim old growth as needed to improve the appearance of ground covers. Most covers need once-a-year trimming to promote growth.

ESC10

Best Management Practices

Additional Information — Seeding and Planting

Limitations

- Construction activities are likely to injure or kill trees unless adequate protective measures are taken. Direct contact by equipment is the most obvious problem, but damage is also caused by root stress from filling, excavation, or compacting too close to trees.
- Temporary seeding can only be viable when adequate time is available for plants to grow and establish.
- Over fertilizing of plants may cause pollution of storm water runoff.
- Irrigation source and supply may be limiting.

REFERENCES

Best Management Practices and Erosion Control Manual for Construction Sites, Flood Control District of Maricopa County, September 1992.

"Draft - Sedimentation and Erosion Control, An Inventory of Current Practices", U.S.E.P.A., April, 1990.

Guides for Erosion and Sediment Controls in California, USDA Soils Conservation Service - January 1991.

Kiowa Engineering, Interim Erosion and Sedimentation Control for Construction Activities, Urban Drainage and Flood Control District, Denver, Colorado.

Manual of Standards of Erosion and Sediment Control Measures, Association of Bay Area Governments, Jun 1981.

Proposed Guidance Specifying Management Measures for Sources of Nonpoint Pollution in Coastal Waters, Work Group Working Paper, USEPA, April, 1992.

Stormwater Management Water for the Puget Sound Basin, Washington State Department of Ecology, The Technical Manual - February 1992, Publication # 91-75.

Water Quality Management Plan for the Lake Tahoe Region, Volume II, Handbook of Management Practices, Tahoe Regional Planning Agency - November 1988.

ESC10

Best Management Practices

BMP: MULCHING

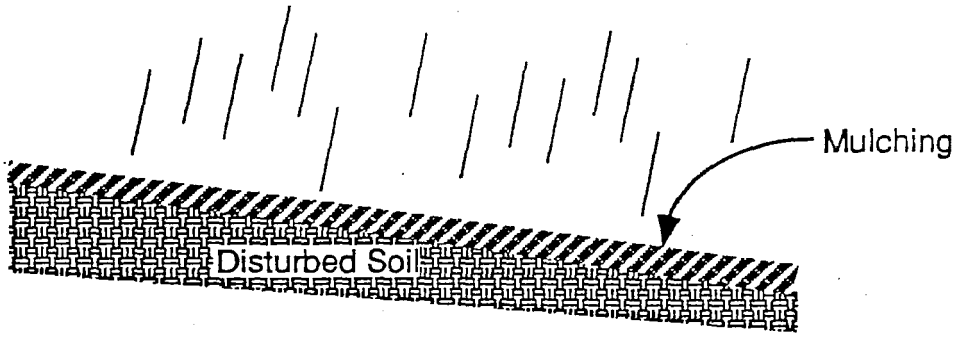

Objectives

- *Housekeeping Practices*
- *Contain Waste*
- *Minimize Disturbed Areas*
- *Stabilize Disturbed Areas*
- *Protect Slopes/Channels*
- *Control Site Perimeter*
- *Control Internal Erosion*

GENERAL DESCRIPTION

Mulching is used to temporarily and permanently stabilize cleared or freshly seeded areas. Types of mulches include organic materials, straw, wood chips, bark or other wood fibers, decomposed granite, and gravel.

SUITABLE APPLICATIONS

- Temporary stabilization of freshly seeded and planted areas.
- Temporary stabilization during periods unsuitable for growing vegetation.
- Temporary stabilization of areas that cannot be seeded or planted (e.g., insufficient rain, steep slope).
- Mulches such as gravel and decomposed soils may be used as post-construction BMPs, particularly in arid regions.

INSTALLATION/APPLICATION CRITERIA

Mulch prevents erosion by protecting the soil surface and fostering growth of new seedings that do not stabilize by themselves.

- May be used with netting to supplement soil stabilization.
- Apply to planting areas where slopes are 2:1 or greater.
- Binders may be required for steep areas, or if wind and runoff is a problem.
- Type of mulch, binders, and application rates should be recommended by manufacturer/contractor.

REQUIREMENTS

- Maintenance
  - Must be inspected weekly and after rain for damage or deterioration.
- Cost: Average annual cost for installation and maintenance (3-4 month useful life, source: EPA, 1992)
  - Straw Mulch: $7,500 per acre.
  - Wood Fiber Mulch: $3,500 per acre.
  - Jute Netting: $12,500 per acre.

LIMITATIONS

- Wood fiber mulches should be used only in areas with over 20 inches annual precipitation.
- Organic mulches are not permanent erosion control measures.
- Mulches tend to lower the soil surface temperature, and may delay germination of some seeds.
- Permanent mulches for arid regions should include gravel and decomposed soils.

Targeted Pollutants

- ● *Sediment*
- ◒ *Nutrients*
- ○ *Toxic Materials*
- ○ *Oil & Grease*
- ○ *Floatable Materials*
- ○ *Other Construction Waste*

● *Likely to Have Significant Impact*
○ *Probable Low or Unknown Impact*

Implementation Requirements

- ◒ *Capital Costs*
- ◒ *O&M Costs*
- ◒ *Maintenance*
- ○ *Training*
- ● *Suitability for Slopes >5%*

● *High* ○ *Low*

ESC11

Best Management Practices

Additional Information — Mulching

Mulching protects the soil from rainfall impact; increases infiltration; conserves moisture around trees, shrubs and seedings; prevents compaction and cracking of soil; and aids plant growth for seedings and plantings by holding the seeds, fertilizers and topsoil in place until growth occurs. Mulches include organic materials, straw, wood chips, bark or other wood fibers, decomposed granite and gravel. A variety of nettings or mats of organic or non-organic materials and chemical soil stabilization are practices that may be used conjunctively with mulching.

Mulching may be applied to all graded and cleared areas of the construction site:

- Areas which have been permanently seeded to assist in retaining moisture, and to hold seedings;
- Areas which need temporary soil surface protection because seeding cannot occur due to the season;
- Areas between trees, shrubs and certain ground covers;
- Areas where climatic conditions require a soil moisture retention aid to avoid cracking of the soil and associated compaction, and require soil temperature modification.

Installation/Application Criteria

Only a set of general guidelines is included for application and installation of mulching on disturbed lands because of the various climates, soil conditions and land uses in California. Installation of mulch consists of furnishing all materials, preparing the soil surface and applying the mulch to all soil surface areas designated on the project plans or established by the site engineer.

Materials

Organic mulch materials, such as straw, wood chips, bark and wood fiber, have been found to be most effective where re-vegetation will be provided by reseeding. The choice of mulch should be based on the size of the area, site slopes, surface conditions such as hardness and moisture; weed growth and availability of mulch materials.

Wood Fiber Mulches: Wood fiber mulches consist of specially prepared wood fiber processed to contain no growth germination inhibiting factors. The mulch should be from virgin wood, and be manufactured and processed so the fibers will remain in uniform suspension in water under agitation to form a homogenous slurry. The fiber lengths should be as long as possible to increase the effectiveness for erosion control. Wood fiber mulching should not be used in areas of extremely hot summer and late fall seasons because of fire danger. When used as a tackifier with straw mulch, wood fiber mulches are good for steep slopes and severe climates. The California Office of the Soils Conservation Service recommends a non-toxic mulch green dye be used to provide a visual aid in metering applications.

Wood Chips and Bark Chips: Wood and bark chips are suitable for application in landscaped areas that will not be closely mowed. Wood chips do not require tacking, but do require nitrogen treatment (12 pounds/ton) to prevent nutrient deficiency. Bark chips do not require additional nitrogen fertilizer. When the wood source is near the project site, wood and bark chips can be very inexpensive. Caution must be used in areas of steep slopes, since both wood and bark chips tend to wash down slopes exceeding 6 percent.

Straw Mulch: Straw mulch is a good short-term protection most commonly used with seeding. The mulch should be from the current season's crop. A letter of certification from the supplier should be required to show that the straw was baled less than 12 months from the delivery date. Wheat or oat straw is recommended.

Emulsified Asphalt: Asphalt is used to adhere the mulch to the ground surface, preventing the mulch from blowing or washing off. The type and quantity of asphalt used should not result in a storm water pollution problem.

Binder: Binder should be free flowing, noncorrosive powder produced from natural plant gum such as those marketed under M-Binder, M145 Binder, or AZ-TAC. Synthetic, spray-on materials are not recommended since they tend to create an impervious surface, and may enter the stormwater sewer system via discharge runoff.

ESC11

Best Management Practices

Additional Information — Mulching

Preparations/Methods and Equipment

Straw Mulch: Should be applied in an even, uniform manner, either by hand or by mulch blowing equipment. Straw mulches must be anchored to prevent the mulch from being blown or washed off the site. Anchoring is achieved in two ways:

- Crimping: The mulch is anchored by running a heavy disc with flat, dull, serrated, closely-spaced blades over the mulched soil. Effective crimping embeds the mulch about 2 inches into the soil without completely covering it. The disc should be run once or twice across the soil. About 2 1/2 tons of straw mulch per acre should be applied if the mulch is anchored by crimping.
- Tacking: Achieved using a emulsified asphalt or binder either independently or followed by crimping. If tacked, straw mulch may be applied at a rate of 1 3/4 ton per acre, and tacked with emulsified asphalt at a rate of 500 gallons per acre.

Wood Fiber Mulch: Typically applied with a hydroseeder at a rate of about 1000 to 1500 pounds per acre, or as a slurry consisting of at least 150 pounds of binder, 400 pounds of wood fiber mulch, and 200 gallons of water per acre.

Requirements

Maintenance: Mulched areas require frequent inspection for damage and deterioration. Requirements will vary greatly based on the type of mulch used and the type of vegetation to be established. Vegetative mulches are usually not intended to be permanent; but are extended only as a base for re-seeding or re-vegetation. Where a permanent anchor for vegetation is required, along steep slopes or areas of higher velocity flows, then a geotextile mat or net is recommended (see ESC20).

REFERENCES

Best Management Practices and Erosion Control Manual for Construction Sites, Flood Control District of Maricopa County, September 1992.

Controlling Erosion of Construction Sites, U.S. Department of Agriculture, Soil Conservation Service, Agriculture Information # 347.

"Draft - Sedimentation and Erosion Control, An Inventory of Current Practices", U.S.E.P.A., April, 1990.

"Environmental Criteria Manual", City of Austin, Texas.

Guides for Erosion & Sediment Control in California, USDA Soils Conservation Service - January 1991.

Manual of Standards of Erosion and Sediment Control Measures, Association of Bay Area Governments, June 1981.

Proposed Guidance Specifying Management Measures for Sources of Nonpoint Pollution in Coastal Waters, Work Group Working Paper, USEPA, April, 1992.

Soil Erosion by Water, U.S. Department of Agriculture, Soil Conservation District, Agriculture Information Bulletin #513.

Stormwater Management Water for the Puget Sound Basin, Washington State Department of Ecology, The Technical Manual - February 1992, Publication # 91-75.

Water Quality Management Plan for the Lake Tahoe Region, Volume II, Handbook of Management Practices, Tahoe Regional Planning Agency - November 1988.

ESC11

Best Management Practices

BMP: GEOTEXTILES AND MATS

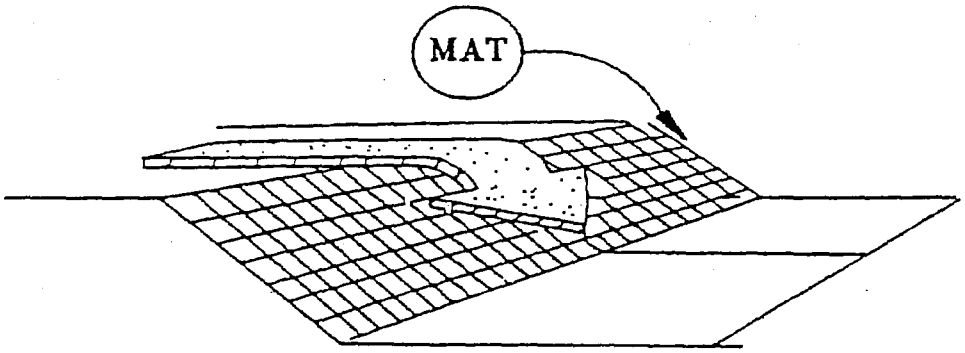

Objectives

- *Housekeeping Practices*
- *Contain Waste*
- *Minimize Disturbed Areas*
- *Stabilize Disturbed Areas*
- *Protect Slopes/Channels*
- *Control Site Perimeter*
- *Control Internal Erosion*

GENERAL DESCRIPTION

Mattings made of natural or synthetic material which are used to temporarily or permanently stabilize soil.

SUITABLE APPLICATIONS

Typically suited for post-construction site stabilization, but may be used for temporary stabilization of highly erosive soils.

- Channels and streams.
- Steep slopes.

INSTALLATION/APPLICATION CRITERIA

Mattings may be applied to disturbed soils and where existing vegetation has been removed. The following organic matting materials provide temporary protection until permanent vegetation is established, or when seasonal circumstances dictate the need for temporary stabilization until weather or construction delays are resolved.

- Jute mattings.
- Straw mattings.

The following synthetic mattings may be used for either temporary or post-construction stabilization, both with and without vegetation

- Excelsior matting.
- Glass fiber matting.
- Staples.
- Mulch nettings.

REQUIREMENTS

- Maintenance
  - Inspect monthly and after significant rainfall.
  - Re-anchor loosened matting and replace missing matting and staples as required.
- Cost
  - Relatively high compared to other BMPs.

LIMITATIONS

- Mattings are more costly than other BMP practices, limiting their use to areas where other BMPs are ineffective (e.g., channels, steep slopes).
- May delay seed germination, due to reduction in soil temperature.
- Installation requires experienced contractor to ensure soil stabilization and erosion protection.

Targeted Pollutants

- ● *Sediment*
- ○ *Nutrients*
- ○ *Toxic Materials*
- ○ *Oil & Grease*
- ○ *Floatable Materials*
- ○ *Other Construction Waste*

- ● *Likely to Have Significant Impact*
- ○ *Probable Low or Unknown Impact*

Implementation Requirements

- ● *Capital Costs*
- ◒ *O&M Costs*
- ◒ *Maintenance*
- ○ *Training*
- ● *Suitability for Slopes >5%*

● *High* ○ *Low*

ESC20

Best Management Practices

Additional Information — Geotextiles and Mats

Mattings are used to reduce erosion from rainfall impact, hold soil in place, and absorb and hold moisture near the soil surface. Additionally, mattings may be used to stabilize soils until vegetation is established. This practice may be used alone or with a mulch during the establishment of protective cover on critical slopes (see ESC11, Mulching).

Suitable Applications

Mattings are commonly applied on short, steep slopes where erosion hazard is high and vegetation will be slow to establish. Mattings are also used on stream banks where moving water at velocities between 3 fps and 6 fps is likely to wash out new vegetation, and in areas where the soil surface is disturbed and where existing vegetation has been removed. Matting may also be used when seeding cannot occur (e.g., late season construction and/or the arrival of an early rain season). Erosion control matting should be considered when the soils are fine grained and potentially erosive.

The following natural or synthetic mattings are commonly used:

Jute Mat - should be cloth of a uniform plain weave of undyed and unbleached single jute yarn, 48" in width, and weighing an average of 1.2 pounds per linear yard of cloth with a tolerance of plus or minus five (5) percent, with approximately 78 warp ends per width of cloth and 41 weft ends per linear yard of cloth. The yarn should be of a loosely twisted construction having an average twist of not less than 1.6 turns per inch and shall not vary in thickness by more than its normal diameter.

Straw Mat - should be a machine produced mat consisting of 70% (±3%) agricultural straw and 30% (±3%) coconut fiber. The blanket should be of consistent thickness with the straw and coconut fiber evenly distributed over the entire area of the mat. The blanket should be covered on the top side with polypropylene netting having an approximate 5/8" x 5/8" mesh containing ultraviolet additives to resist breakdown, and on the bottom with a polypropylene netting with an approximate " x " mesh. The blanket should be sewn together with cotton thread.

Excelsior Mat - should be wood excelsior, 48 inches in width plus or minus one inch and weighing 0.8 pound per square yard plus or minus ten percent. The excelsior material should be covered with a netting to facilitate handling and to increase strength.

Glass Fiber Matting - should be of bonded textile glass fibers with an average fiber diameter of eight to twelve microns, two to four inch strands of fiber bonded with phenol formaldehyde resin. Mat should be roll type, water permeable, minimum thickness inch, maximum thickness inch, density not less than three pounds per cubic foot.

Staples for anchoring soil stabilizing materials should be Number 11 gauge wire or heavier. Their length should be six to ten inches, with longer staples used in loose, unstable soils.

Other Mulch Netting - such as paper, plastic, cotton or fiber glass matting should be installed according to the manufacturer's recommendations.

Installation/Application Criteria

Organic matting materials have been found to be effective where re-vegetation will be provided by re-seeding. The choice of matting should be based on the size of area, side slopes, surface conditions such as hardness and moisture; weed growth and availability of materials. Matting strengths and uses vary, therefore, manufacturer's specifications must be followed. Proper installation of mattings is critical in order to obtain firm, continuous contact with the soil.

ESC20

Best Management Practices

Additional Information — Geotextiles and Mats

Site Preparation: After the site has been shaped and graded to the approved design, prepare a friable seed bed relatively free from clods and rocks more than 1 inches in diameter and any foreign material that will prevent contact of the protective mat with the soil surface.

Planting: Fertilize and seed in accordance with seeding specifications or other types of landscaping plans. When using jute matting on a seeded area, apply approximately half the seed before laying the mat and the remainder after laying the mat. The protective matting can be laid over areas where grass has been planted and the seedlings have emerged. Where vines or other ground covers are to be planted, lay the protective matting first and then plant through matting according to design of planting.

Erosion Stops: Erosion stops are made of glass fiber strips, excelsior matting strips or tight-folded jute matting blanket or strips for use on steep, highly erodible watercourses. The stops are placed in narrow trenches six to twelve inches deep across the channel and left flush with the soil surface. They are to cover the full cross section of designed flow.

Laying and Securing Matting: Before laying the matting, all erosion stops should be installed and the friable seed bed made free from clods, rocks, and roots. The surface upon which the separation fabric will be placed should be compacted and finished according to the requirements of the manufacturer's recommendations.

Most matting comes with the manufacturer's recommendations for installation. Most channels will require multiple widths of matting, and the matting should be unrolled starting at the upper end of the channel, allowing a four inch overlap of mattings along the center of the channel. To secure, bury the top ends of the matting in a narrow trench, a minimum of six inches deep. Backfill trench and tamp firmly to conform to channel cross section. Secure with a row of staples about four inches down slope from the trench with staples twelve inches apart.

Where matting crosses erosion stops, reinforce with a double row of staples at six inch spacing, using a staggered pattern on either side of the erosion stop. When the matting is overlapped, the discharge end of the matting liner should be similarly secured with a double row of staples.

Mechanical or manual laydown equipment should be capable of handling full rolls of fabric, and laying the fabric smoothly, without wrinkles or folds. The equipment should meet the fabric manufacturer's recommendations or equivalent standards.

Final Check: Check the following after the mating is installed:

- Make sure matting is uniformly in contact with the soil.
- All lap joints are secure.
- All staples are flush with the ground.
- All disturbed areas seeded.

Limitations

Properly installed mattings provide excellent erosion control but do so at relatively high cost. This high cost typically limits the use of mattings to areas of concentrated channel flow and steep slopes.

Installation is critical and requires experienced contractors. The contractor should install the matting material in such a manner that continuous contact between the material and the soil occurs, otherwise the material will not stabilize the soil and erosion will occur beneath the material. Ultraviolet protection may be required on some geotextiles. Matting strengths and uses vary; the manufacturer's specifications should be followed.

ESC20

Best Management Practices

Additional Information — Geotextiles and Mats

REFERENCES

Best Management Practices and Erosion Control Manual for Construction Sites, Flood Control District of Maricopa County, September 1992.

Guides for Erosion and Sediment Controls in California, USDA Soils Conservation Service - January 1991.

Stormwater Management Water for the Puget Sound Basin, Washington State Department of Ecology, The Technical Manual - February 1992, Publication # 91-75.

Water Quality Management Plan for the Lake Tahoe Region, Volume II, Handbook of Management Practices, Tahoe Regional Planning Agency - November 1988.

ESC20

Best Management Practices

Additional Information — Geotextiles and Mats

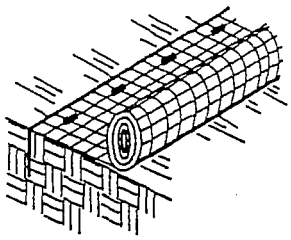

ANCHOR SLOT: BURY THE UP-CHANNEL END OF THE NET IN A 12" DEEP TRENCH. TAMP THE SOIL FIRMLY. STAPLE AT 12" INTERVALS ACROSS THE NET.

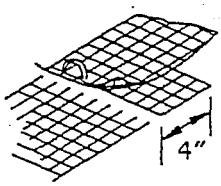

OVERLAP: OVERLAP EDGES OF THE STRIPS AT LEAST 4". STAPLE EVERY 12" DOWN THE CENTER OF THE STRIP.

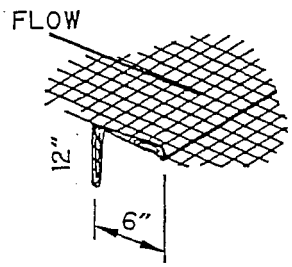

JOINING STRIPS: INSERT THE NEW ROLL OR NET IN A TRENCH, AS WITH THE ANCHOR SLOT. OVERLAP THE UP-CHANNEL END OF THE PREVIOUS ROLL 18" AND TURN THE END OF THE PREVIOUS ROLL, JUST BELOW THE ANCHOR SLOT, LEAVING 6" OVERLAP.

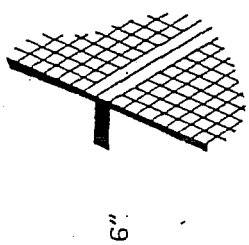

CHECK SLOTS: ON ERODIBLE SOILS OR STEEP SLOPES, CHECK SLOTS SHOULD BE MADE EVERY 15 FEET. INSERT A FOLD OF THE NET INTO A 6" TRENCH AND TRAMP FIRMLY. STAPLE AT 12" INTERVALS ACROSS THE NET. LAY THE NET SMOOTHLY ON THE SURFACE OF THE SOIL - DO NOT STRETCH THE NET, AND DO NOT ALLOW WRINKLES.

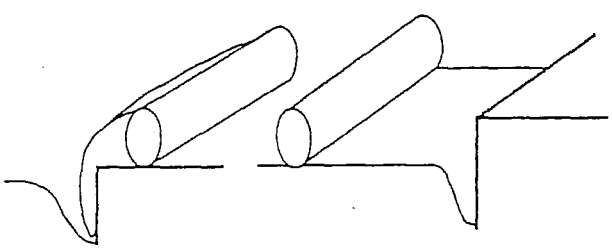

ANCHORING ENDS AT STRUCTURES: PLACE THE END OF THE NET IN A 12" SLOT ON THE UP-CHANNEL SIDE OF THE STRUCTURE. FILL THE TRENCH AND TAMP FIRMLY. ROLL THE NET UP THE CHANNEL. PLACE STAPLES AT 12" INTERVALS ALONG THE ANCHOR END OF THE NET.

INSTALLATION OF NETTING AND MATTING

ESC20

Best Management Practices

Additional Information — Geotextiles and Mats

ON SHALLOW SLOPES, STRIPS OF NETTING MAY BE APPLIED ACROSS THE SLOPE.

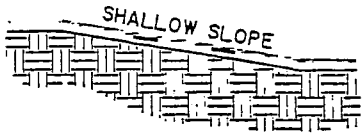

SECTION

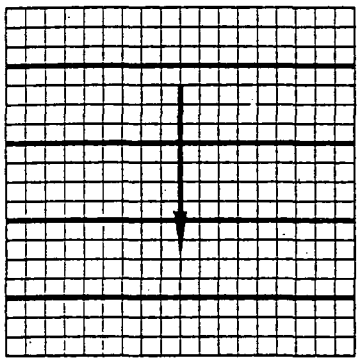

(SHALLOW SLOPES)

PLAN

ON STEEP SLOPES, APPLY STRIPS OF NETTING PARALLEL TO THE DIRECTION OF FLOW AND ANCHOR SECURELY.

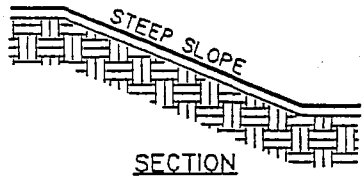

SECTION

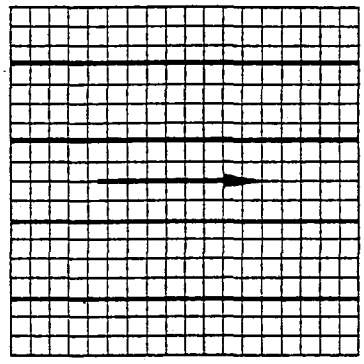

(STEEP SLOPE)

PLAN

IN DITHCHES, APPLY NETTING PARALLEL TO THE DIRECTION OF FLOW. USE CHECK SLOTS EVERY 15 FEET. DO NOT JOIN STRIPS IN THE CENTER OF THE DITCH.

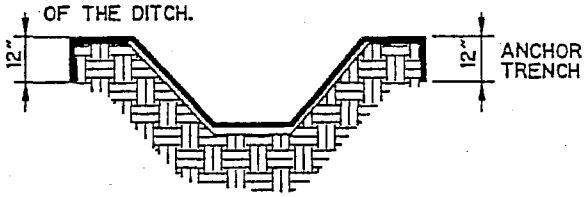

SECTION

FLOW

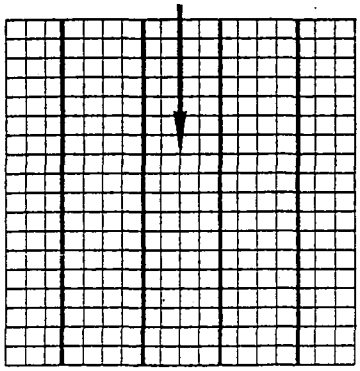

(DITCH)

PLAN

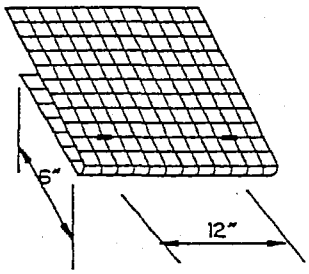

BRING NETTING DOWN TO A LEVEL BEFORE TERMINATING THE INSTALLATION. TURN THE END UNDER 6" AND STAPLE AT 12" INTERVALS.

BERM

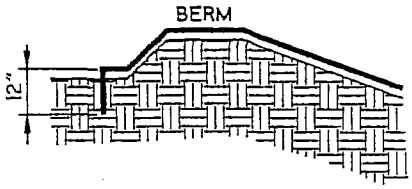

WHERE THERE IS A BERM AT THE TOP OF THE SLOPE, BRING THE MATTING OVER THE BERM AND ANCHOR IT BEHIND THE BERM WITH A 12" ANCHOR TRENCH.

ESC20

Best Management Practices

ORIENTATION OF NETTING AND MATTING

BMP: DUST CONTROLS

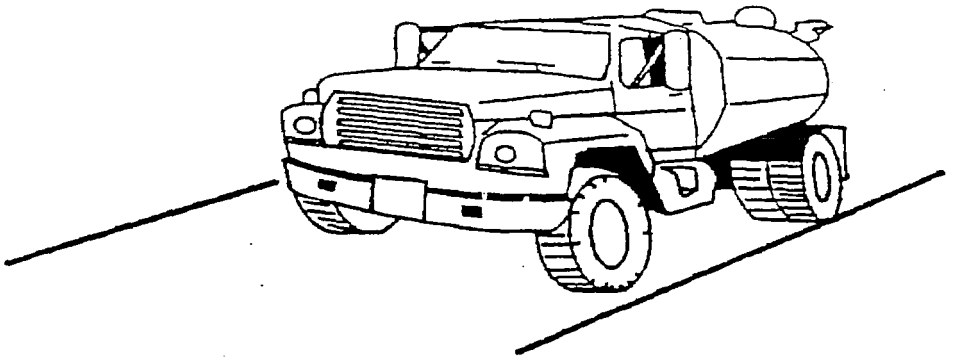

Objectives

- (●) Housekeeping Practices
- Contain Waste
- (●) Minimize Disturbed Areas
- (●) Stabilize Disturbed Areas
- Protect Slopes/Channels
- (●) Control Site Perimeter
- Control Internal Erosion

GENERAL DESCRIPTION

Dust control measures are used to stabilize soil from wind erosion, and reduce dust generated by construction activities.

SUITABLE APPLICATIONS

- Clearing and grading activities.
- Construction vehicle traffic on unpaved roads.
- Drilling and blasting activities.
- Sediment tracking onto paved roads.
- Soil and debris storage piles.
- Batch drop from front end loaders.
- Areas with unstabilized soil.
- Final grading/site stabilization usually is sufficient to control post-construction dust sources.

INSTALLATION/APPLICATION CRITERIA

- Schedule construction activities to minimize exposed area (See ESC 1).
- Quickly stabilize exposed soils using vegetation, mulching, spray-on adhesives, calcium chloride, sprinkling, and stone/gravel layering (See ESC 10 and 11).
- Identify and stabilize key access points prior to commencement of construction (See ESC 24).
- Minimizing the impact of dust by anticipating the direction of prevailing winds.
- Direct most construction traffic to stabilized roadways within the project site (See ESC 23).

REQUIREMENTS

- Maintenance
  - Most dust control measures require frequent, often daily, attention.
- Cost
  - Installation costs for water/chemical dust suppression are low, but annual costs may be quite high since these measures are effective for only a few hours to a few days.

LIMITATIONS

- Watering prevents dust only for a short period and should be applied daily (or more often) to be effective.
- Overwatering may cause erosion.
- Oil should not be used for dust control because the oil may migrate into drainageway and/or seep into the soil.
- Certain chemically-treated subgrades may make soil water repellant, increasing runoff.

Targeted Pollutants

- (●) Sediment
- ( ) Nutrients
- (◒) Toxic Materials
- (◒) Oil & Grease
- ( ) Floatable Materials
- ( ) Other Construction Waste

(●) Likely to Have Significant Impact
( ) Probable Low or Unknown Impact

Implementation Requirements

- ( ) Capital Costs
- (◒) O&M Costs
- (◒) Maintenance
- ( ) Training
- ( ) Suitability for Slopes >5%

(●) High ( ) Low

ESC21

Best Management Practices

Additional Information — Dust Controls

California's mediterranean climate, with short wet seasons and long hot dry seasons, allow the soils to thoroughly dry out. During these dry seasons, construction activities are at their peak, and disturbance and exposed areas are increasingly subject to wind erosion, sediment tracking and dust generated by construction equipment.

Dust control, as a BMP, is a practice that is already in place for many construction activities. Los Angeles, the North Coast and Sacramento, among others have enacted dust control ordinances for construction activities that cause dust to be transported beyond the construction project property line. Recently, the State Air Resources Control Board has, under the authority of the Clean Air Act, started to address air quality in relation to inhalable particulate matter less than 10 microns (PM-10). 90% of these small particles are considered to be dust. Existing dust control regulations by local agencies, municipal departments, public works department, and/or public health departments are in place in some regions within California. For jurisdictions that have no formal dust control regulations and/or standards, Sections 10, 17 and 18 of CalTrans' Standard Specifications provide detailed provisions for dust control practices.

Many local agencies require dust control in order to comply with local nuisance laws, opacity laws (visibility impairment) and the requirements of the Clean Air Act. The following are measures that local agencies may have already implemented as requirements for dust control from contractors:

- Construction & Grading Permits: Require provisions for dust control plans;
- Opacity Emission Limits: Enforce compliance with California air pollution control laws;
- Increase overall enforcement activities: Priority given to cases involving citizen complaints;
- Maintain Field Application Records: Require records of dust control measures from contractor;
- Stormwater Pollution Prevention Plan: (SWPPP): Integrate dust control measures into SWPPP.

Dust Control Practices

Dust control BMP's generally stabilize exposed surfaces and minimize activities that suspend or track dust particles. Table ESC21.1 shows which Dust Control BMPs apply to site conditions which cause dust. For heavily traveled and disturbed areas, wet suppression (watering), chemical dust suppression, gravel or asphalt surfacing, temporary gravel construction entrances, equipment wash-out areas, and haul truck covers can be employed as dust control applications. Permanent or temporary vegetation and mulching and sand fences can be employed for areas of occasional or no construction traffic. Preventive measures would include minimizing surface areas to be disturbed, limiting on-site vehicle traffic to 15 miles per hour, and controlling the number and activity of vehicles on a site at any given time.

Many of the reasonably available control measures for controlling dust from construction sites can also be implemented as BMPs for storm water pollution prevention. Those BMPs include:

- Pave, vegetate, or chemically stabilize access points where unpaved traffic surfaces adjoin paved roads.
- Provide covers for haul trucks transporting materials that contribute to dust.
- Provide for wet suppression or chemical stabilization of exposed soils.
- Provide for rapid clean-up of sediments deposited on paved roads. Furnish stabilized construction road entrances and vehicle wash down areas.
- Stabilize unpaved haul roads, parking and staging areas. Reduce speed and trips on unpaved roads.
- Implement dust control measures for material stockpiles.
- Prevent drainage of sediment laden storm water onto paved surfaces.
- Stabilize abandoned construction sites using vegetation or chemical stabilization methods.
- Limit the amount of areas disturbed by clearing and earth moving operations by scheduling these activities in phases.

For the chemical stabilization, there are many products available for chemically stabilizing gravel roadways and stockpiles. The types of chemicals available and recommendations for their use are tabulated in Table ESC 21.2, Commonly Used Chemicals for Dust Control.

ESC21

Best Management Practices

Additional Information — Dust Controls

In addition, there are many other BMPs identified in this handbook that provide dust control including:

- Seeding and Plantings (ESC 10)
- Mulching (ESC 11)
- Construction Road Stabilization (ESC 23)
- Stabilized Construction Entrances (ESC 24)

Limitations

- Oil treated subgrades should not be used because the oil may migrate into drainageways and/or seep into the soil.
- Chemically treated subgrades may make the soil water repellant, interfering with long-term infiltration, and the vegetation/re-vegetation of the site. Some chemical dust suppressants may be subject to freezing and may contain solvents and should be handled properly.
- Asphalt, as a mulch tack or chemical mulch, requires a 24 hour curing time to avoid adherence to equipment, worker shoes, etc. Application should be limited because asphalt surfacing may eventually migrate into the drainage system.
- In compacted areas, watering and other liquid dust control measures may wash sediment or other constituents into the drainage system.

REFERENCES

Best Management Practices and Erosion Control Manual for Construction Sites, Flood Control District of Maricopa County, Arizona, September 1992.

California Air Pollution Control Laws, California Air Resources Board, 1992.

CalTrans, Standard Specifications, Sections 10, "Dust Control"; Section 17, "Watering"; and Section 18, "Dust Palliative".

Prospects for Attaining the State Ambient Air Quality Standards for Suspended Particulate Matter (PM10), Visibility Reducing Particles, Sulfates, Lead, and Hydrogen Sulfide, California Air Resources Board, April 1991.

Sacramento County, Winterization Ordinance & Dust Control Ordinance (example).

USDA Soil Conservation Service, "Guides for Erosion and Sediment Control".

ESC21

Best Management Practices

TABLE ESC 21.1 DUST CONTROL BMPs FOR GIVEN SITE CONDITIONS

SITE CONDITION	DUST CONTROL BMPs								
	Permanent Vegetation	Mulching	Wet Suppression (Watering)	Chemical Dust Suppression	Gravel or Asphalt Surfacing	Sand Fences	Temporary Gravel Construction Entrances/Equipment Wash Down	Haul Truck Covers	Minimize Extent of Area Disturbed
Disturbed Areas not Subject to Traffic	X	X	X	X	X				X
Disturbed Areas Subject to Traffic			X	X	X				X
Material Stock Pile Stabilization			X	X		X			X
Demolition			X				X	X	
Clearing/Excavation			X	X					X
Truck Traffic on Unpaved Roads			X	X	X			X	
Mud/Dirt Carry-Out					X		X		

TABLE ESC 21.2 COMMONLY USED CHEMICALS FOR DUST CONTROL

	SALTS	ORGANIC, NON PETROLEUM-BASED	PETROLEUM BASED PRODUCTS[1]
CHEMICAL TYPES	• Calcium Chloride[2] • Magnesium Chloride • Natural Brines	• Calcium Lignosulfonate • Sodium Lignosulfonate • Ammonium Lignosulfonate	• Bunker Oil • Asphalt Primer • Emulsified Asphalt
LIMITATIONS	Can lose effectiveness in dry periods with low humidity. Leaches from road in heavy rain Not recommended for gravel road surfaces with low fines. Recommended 10-20% fines.	Not affected by dry weather and low humidity. Leached from road in heavy rain if not sufficiently cured. Best performance on gravel roads with high surface fines (10-30%) and dense compact surface with loose gravel.	Generally effective regardless of climatic conditions may pothole in wet weather. Best performance on gravel roads with 5-10% fines.
COMMENTS	Calcium Chloride is popular. May become slippery when wet on gravel surfaces with high fines.	Ineffective on gravel surfaces low in fines. May become slippery when wet on gravel surfaces with high fines content.	Creates a hardened crust.

[1] Motor oils and oil treatments are not recommended due to adverse effects on plant life and groundwater.

[2] Not recommended due to adverse effects on plant life.

BMP: TEMPORARY STREAM CROSSING

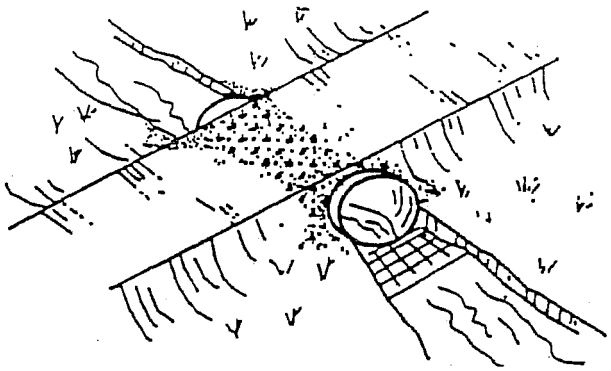

Objectives

- (Housekeeping Practices)
- Contain Waste
- (Minimize Disturbed Areas)
- (Stabilize Disturbed Areas)
- (Protect Slopes/Channels)
- Control Site Perimeter
- Control Internal Erosion

GENERAL DESCRIPTION

A temporary access stream crossing is a temporary culvert, ford or bridge placed across a waterway to provide access for construction purposes for a period of less than one year. Temporary access crossings are not intended to be used to maintain traffic for the general public.

SUITABLE APPLICATIONS

Temporary stream crossings should be installed at all designated crossings of perennial and intermittent streams on the construction site, as well as for dry channels which may be significantly eroded by construction traffic.

INSTALLATION/APPLICATION CRITERIA

Requires knowledge of stream flows and soil strength and should be designed under the direction of a California registered engineer with knowledge of both hydraulics and construction loading requirements for structures.

REQUIREMENTS

- Maintenance
  - Inspect weekly and after each significant rainfall, including assessment of foundations.
  - Periodically remove silt from crossings.
  - Replace lost aggregate from inlets and outlets of culverts.
- Cost
  - CalTrans Construction Cost Index for temporary bridge crossing is $45-$95 per square feet.

LIMITATIONS

- May be an expensive for a temporary improvement.
- Requires other BMPs to minimize soil disturbance during installation and removal.
- Fords should only be used in dry weather.

Targeted Pollutants

- ● Sediment
- ○ Nutrients
- ○ Toxic Materials
- ◒ Oil & Grease
- ○ Floatable Materials
- ○ Other Construction Waste

- ● Likely to Have Significant Impact
- ○ Probable Low or Unknown Impact

Implementation Requirements

- ◒ Capital Costs
- ○ O&M Costs
- ◒ Maintenance
- ○ Training
- ○ Suitability for Slopes >5%

● High ○ Low

ESC22

Best Management Practices

Additional Information — Temporary Stream Crossing

A temporary access stream crossing is a culvert, ford, or bridge placed across a waterway to provide access for construction for a period of less than one year. Temporary access crossings are not intended to be used for general public traffic.

The purpose of this BMP is to provide a safe, erosion-free access across a stream for construction equipment. Minimum standards and specifications for the design, construction, maintenance, and removal of the structure should be established by an engineer registered in California. Temporary stream crossings may be necessary to prevent construction equipment from causing erosion of the stream and tracking sediment and other pollutants into the stream.

Temporary stream crossings are used as access points to construction sites when other detour routes may be too long or burdensome for the construction equipment. Often heavy construction equipment must cross streams or creeks, and detour routes may impose too many constraints such as being too narrow or poor soil strength for the equipment loadings. Additionally, the contractor may find a temporary stream crossing more economical for light-duty vehicles to use for frequent crossings, and may have less environmental impact than construction of a temporary access road.

Installation/Application

Temporary access stream crossings should be sized and installed according to the drainage design criteria of the local municipality. Design criteria should be based on standard engineering practices for culvert design with provisions for minimizing impacts on disturbed crossing areas. Three types of temporary access stream crossings may be considered:

Temporary Access Culvert: A temporary access culvert is effective in controlling erosion but will cause erosion during installation and removal. A temporary culvert can be easily constructed and allows for heavy equipment loads.

Temporary Access Ford: A temporary access ford provides little sediment and erosion control and is ineffective in controlling erosion in the stream channel. A temporary ford is the least expensive stream crossing and allows for maximum load limits. It also offers very low maintenance. Fords are more appropriate during the dry season and in arid areas of California.

Temporary Access Bridge: With the appropriate materials and designs, a temporary access bridge causes the least erosion of the stream channel crossing during its installation and removal.

During the long summer construction season in California, rainfall is infrequent and many streams are dry. Under these conditions, a temporary access ford may be sufficient. A ford is not appropriate if construction will continue through the winter rainy season, if summer thunderstorms are likely, or if the stream flows during most of the year. Temporary access culverts and bridges should then be considered and, if used, should be sized to pass a significant design storm (i.e., at least a 10-year storm). The temporary stream crossing should be protected against erosion, both to prevent excessive sedimentation in the stream and to prevent washout of the crossing (and, consequently, costly construction delays).

Limitations

Special care must be taken when crossing an environmentally sensitive waterway. Oils or other potentially hazardous materials shall not be used for surface treatments. Street runoff should not be allowed to spill down crossing sideslopes. Construction in watercourses should be at or near the natural elevation of the stream bed to prevent any potential flooding upstream of the crossing. In addition, the following limitations may apply:

ESC22

Best Management Practices

Additional Information — Temporary Stream Crossing

- May be expensive temporary cost
- Increased soil disturbance upon installation and removal
- Temporary culverts need regular maintenance and can cause erosion if the culvert becomes clogged.
- A temporary ford offers little if any erosion control in flowing streams and can often make erosion worse. Fords should only be used in the dry season on dry streams.

Construction in waterways is subject to additional permit requirements. Contact the local municipal storm water agency for additional information.

REFERENCES

Bank and Shore Protection, CalTrans - November 1970.

Best Management Practices and Erosion Control Manual for Construction Sites, Flood Control District of Maricopa County, Arizona, September, 1992.

ESC22

Best Management Practices

Additional Information — Temporary Stream Crossing

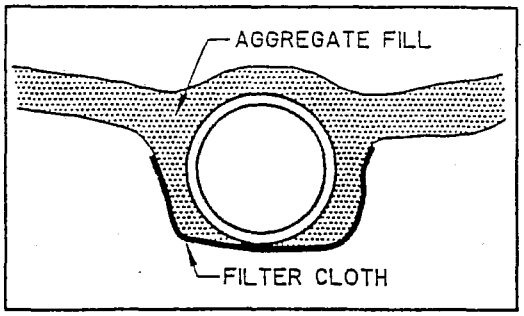

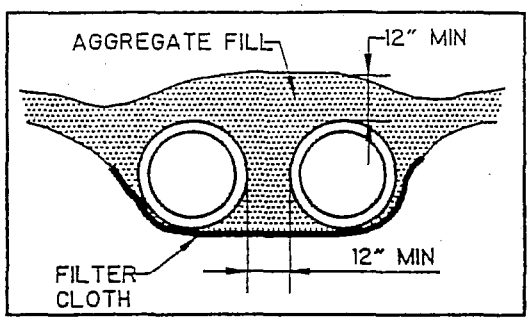

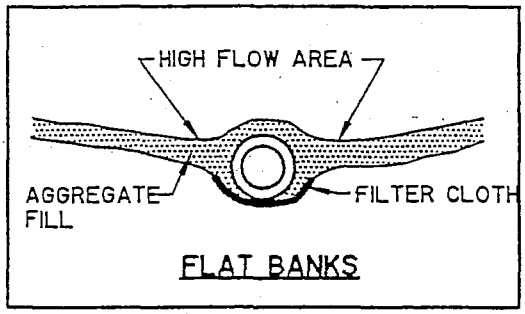

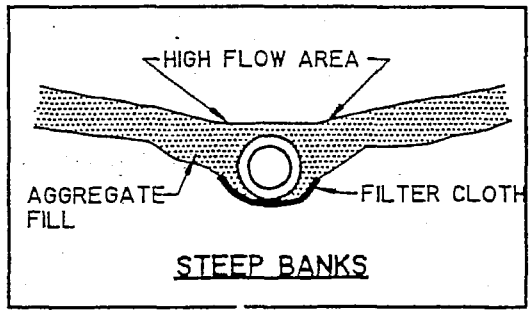

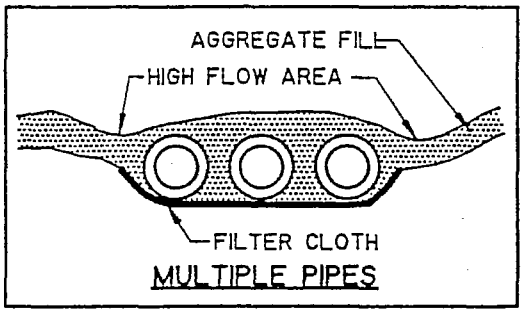

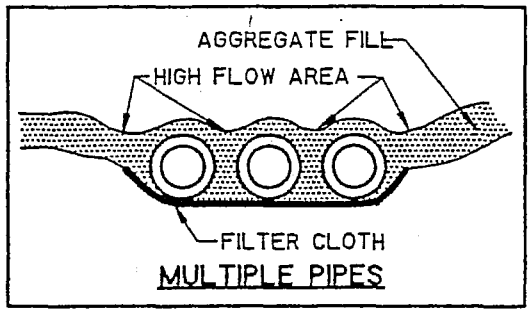

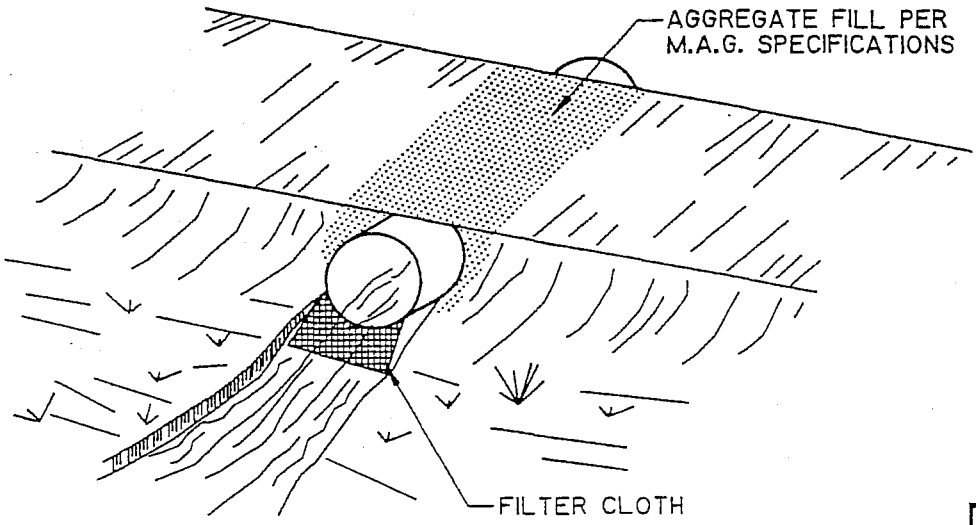

TEMPORARY ACCESS CULVERT

ESC22

Best Management Practices

Additional Information — Temporary Stream Crossing

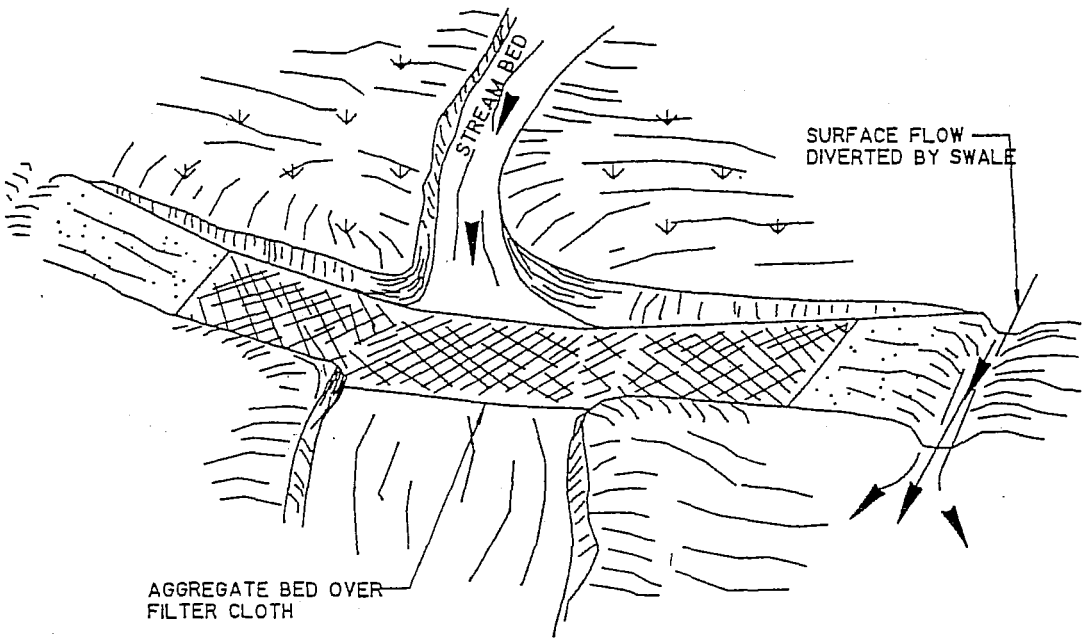

AGGREGATE APPROACH
5 : 1 MAXIMUM. SLOPE ON ROAD

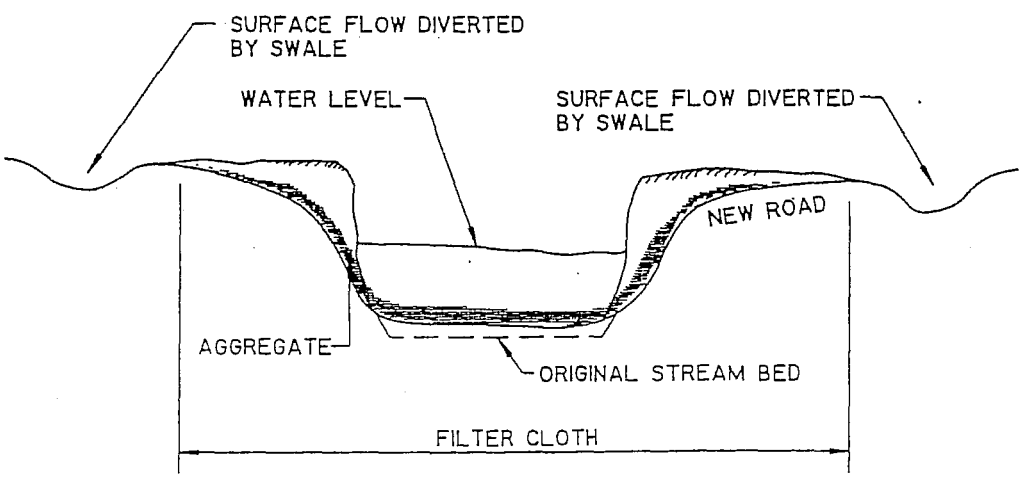

TEMPORARY ACCESS FORD

ESC22

BMP: CONSTRUCTION ROAD STABILIZATION

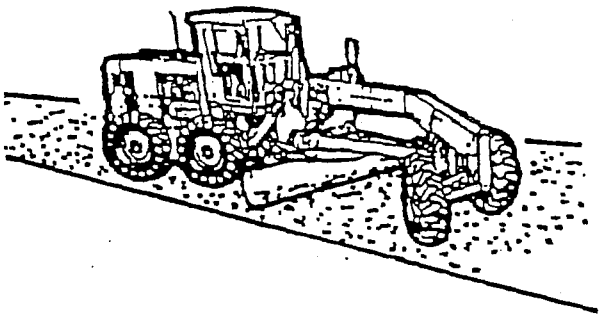

Objectives

- Housekeeping Practices
- Contain Waste
- Minimize Disturbed Areas
- Stabilize Disturbed Areas
- Protect Slopes/Channels
- Control Site Perimeter
- Control Internal Erosion

GENERAL DESCRIPTION

Access roads, subdivision roads, parking areas, and other on-site vehicle transportation routes should be stabilized immediately after grading and frequently maintained to prevent erosion and control dust.

SUITABLE APPLICATIONS

- Temporary construction traffic.
- Phased construction projects and off-site road access.
- Detour roads.
- Construction during wet weather.

INSTALLATION/APPLICATION CRITERIA

- Road should follow topographic contours to reduce erosion of the roadway.
- The roadway slope should not exceed 15 percent.
- Gravel roads should be a minimum 4-inch thick, 2-3 inch coarse aggregate base applied immediately after grading, or as recommended by soils engineer.
- Chemical stabilizers or water are usually required on gravel or dirt roads to prevent dust (see Dust Control ESC 21).

REQUIREMENTS

- Maintenance
  - Periodically apply additional aggregate on gravel roads.
  - Active dirt construction roads are commonly watered three or more times per day during the dry season.
  - Inspect weekly, and after each rain.
  - Repair any eroded areas immediately.
- Cost
  - Gravel construction roads are moderately expensive, but cost is often balanced by reductions in construction delay.
  - No additional costs for dust control on construction roads should be required above that needed to meet local air quality requirements.

LIMITATIONS

- The roadway must be removed or paved when construction is complete.
- Certain chemical stabilization methods may cause storm water or soil pollution and should not be used (see Dust Control ESC 21).
- Management of construction traffic is subject to air quality control measures. Contact the local air quality management agency.

Targeted Pollutants

- ● Sediment
- ○ Nutrients
- ○ Toxic Materials
- ○ Oil & Grease
- ○ Floatable Materials
- ○ Other Construction Waste

● Likely to Have Significant Impact
○ Probable Low or Unknown Impact

Implementation Requirements

- ◒ Capital Costs
- ◒ O&M Costs
- ◒ Maintenance
- ○ Training
- ◒ Suitability for Slopes >5%

● High ○ Low

ESC23

Best Management Practices

Additional Information — Construction Road Stabilization

Areas which are graded for construction vehicle transport and parking purposes are especially susceptible to erosion and dust. The exposed soil surface is continually disturbed, leaving no opportunity for vegetative stabilization. Such areas also tend to collect and transport runoff waters along their surfaces. During wet weather, they often become muddy quagmires which generate significant quantities of sediment that may pollute nearby streams or be transported off-site on the wheels of construction vehicles. Dirt roads can become so unstable during wet weather that they are virtually unusable.

Efficient construction road stabilization not only reduces on-site erosion but can significantly speed on-site work, avoid instances of immobilized machinery and delivery vehicles, and generally improve site efficiency and working conditions during adverse weather.

Installation/Application Criteria

Where feasible, alternative routes should be made for construction traffic; one for use in dry condition, the other for wet conditions which incorporate the measures listed for this BMP. Permanent roads and parking areas should be paved as soon as possible after grading. As an alternative where construction will be phased, the early application of gravel or chemical stabilization may solve potential erosion and stability problems. Temporary gravel roadway should be considered during the rainy season and/or on slopes greater than 5 percent.

When gravel road is needed, apply a minimum 4-inch course of 2 to 4-inch crushed rock, gravel base, or crushed surfacing base course immediately after grading or the completion of utility installation within the right-of-way. Chemical stabilization may also be used upon compacted native sub-grade (see the Dust Control BMP ESC 21). These chemical controls should be applied per the manufacturer's directions.

Temporary roads should follow the contour of the natural terrain to the maximum extent possible. Slope should not exceed 15 percent. Roadways should be carefully graded to drain transversely. Provide drainage swales on each side of the roadway in the case of a crowned section, or one side in the case of super-elevated section. Simple gravel berms without a trench can also be used.

Installed inlets should be protected to prevent sediment-laden water from entering the storm sewer system (see "Storm Drain Inlet Protection" ESC 54).

REFERENCES

Best Management Practices and Erosion Control Manual for Construction Sites, Flood Control District of Maricopa County, Arizona, September1992.

Manual of Standards of Erosion and Sediment Control Measures, Association of Bay Area Governments, June1981.

Stormwater Management Water for the Puget Sound Basin, Washington State Department of Ecology, The Technical Manual - February 1992, Publication # 91-75.

Virginia Erosion and Sedimentation Control Handbook, Virginia Department of Conservation and Recreation, Division of Soil and Water Conservation, 1991.

Water Quality Management Plan for the Lake Tahoe Region, Volume II, Handbook of Management Practices, Tahoe Regional Planning Agency - November 1988.

ESC23

Best Management Practices

BMP: STABILIZED CONSTRUCTION ENTRANCE

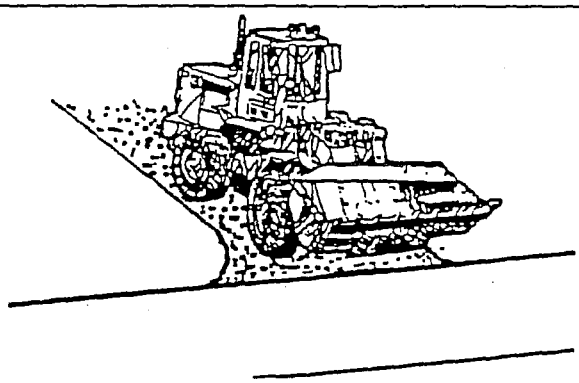

Objectives

- (Housekeeping Practices)
- Contain Waste
- (Minimize Disturbed Areas)
- (Stabilize Disturbed Areas)
- Protect Slopes/Channels
- (Control Site Perimeter)
- Control Internal Erosion

Targeted Pollutants

- ◒ Sediment
- ◒ Nutrients
- ◒ Toxic Materials
- ◒ Oil & Grease
- ○ Floatable Materials
- ○ Other Construction Waste

● Likely to Have Significant Impact
○ Probable Low or Unknown Impact

Implementation Requirements

- ◒ Capital Costs
- ○ O&M Costs
- ○ Maintenance
- ○ Training
- ○ Suitability for Slopes >5%

● High ○ Low

GENERAL DESCRIPTION

The construction entrance practice is a stabilized pad of aggregate underlain with filter cloth located at any point where traffic will be entering or leaving a construction site to or from a public right-of-way, street, alley, sidewalk or parking area. Stabalizing the construction entrance significantly reduces the amount of sediment (dust, mud) tracked off-site, especially if a washrack incorporated for removing caked on sediment.

SUITABLE APPLICATIONS

- All points of construction ingress and egress.
- Unpaved areas where sediment tracking occurs from site onto paved roads.

INSTALLATION/APPLICATION CRITERIA

- Construct on level ground where possible.
- Stones should be 1-3 inches.
- Minimum depth of stones should be 6 inches or as recommended by soils engineer.
- Length should be 50-foot minimum, and 30-foot minimum width.
- Provide ample turning radii as part of entrance.

REQUIREMENTS

- Maintenance
  - Inspect monthly and after each rainfall.
  - Replace gravel material when surface voids are visible.
  - Remove all sediment deposited on paved roadways within 24 hours.
  - Remove gravel and filter fabric at completion of construction
- Cost: Average annual cost for installation and maintenance (Source: EPA, 1992)
  - Without Wash Rock: $1500 each.
  - With Wash Rock: $2200 each.

LIMITATIONS

- Requires periodic top dressing with additional stones.
- Should be used in conjunction with street sweeping on adjacent public right-of-way.

ESC24

Best Management Practices

Additional Information — Stabilized Construction Entrance

A stabilized construction entrance is a pad of aggregate underlain with filter cloth located at any point where traffic will be entering or leaving a construction site to or from a public right-of-way, street, alley, sidewalk or parking area. The purpose of a stabilized construction entrance is to reduce or eliminate the tracking of sediment onto public rights-of-way or streets. Reducing trackout of sediments and other pollutants onto paved roads helps prevent deposition of sediments into local storm drains and production of airborne dust.

Where traffic will be entering or leaving, a stabilized construction entrance should be used at all points of construction ingress and egress. NPDES permits require that appropriate measures be implemented to prevent trackout of sediments onto paved roadways, which is a significant source of sediments derived from mud and dirt carryout from the unpaved roads and construction sites.

Stabilized construction entrances are moderately effective in removing sediment from equipment leaving a construction site. The entrance should be build on the level ground. Advantages of the Stabilized Construction Entrance is that it does remove some sediment from equipment and serves to channel construction traffic in and out of the site at specified locations. Efficiency is greatly increased when a washing rack is included as part of a stabilized construction entrance.

The aggregate for a stabilized construction entrance aprons should be 1 to 3 inches in size, washed, well-graded gravel or crushed rock. Minimum apron dimensions of 30 ft. x 50 ft. and 6 inches deep is adequate for two-way ingress/egress traffic.

The entrance must be properly graded to prevent runoff from leaving the construction site.
When wash areas are provided, washing is done on a reinforced concrete pad (if significant washing is necessary) or in an area stabilized with crushed stone which drains into a properly constructed sediment trap or basin (ESC 55 and 56). Sediment barriers are provided to prevent sediments from entering into the stormwater sewer system, ditch, or waterway.

Limitations

- Construct on level ground.
- Stabilized construction entrances are rather expensive to construct and when a wash rack is included, a sediment trap of some kind must also be provided to collect wash water runoff.
- Requires periodic top dressing with additional stones.
- Should be used in conjunction with street sweeping on adjacent public right-of-way.

REFERENCES

Best Management Practices and Erosion Control Manual for Construction Sites, Flood Control District of Maricopa County, Arizona, September 1992.

Manual of Standards of Erosion and Sediment Control Measures, Association of Bay Area Governments, June 1981.

Proposed Guidance Specifying Management Measures for Sources of Nonpoint Pollution in Coastal Waters, Work Group Working Paper, USEPA, April, 1992.

Stormwater Management Water for the Puget Sound Basin, Washington State Department of Ecology, The Technical Manual - February 1992, Publication # 91-75.

Virginia Erosion and Sedimentation Control Handbook, Virginia Department of Conservation and Recreation, Division of Soil and Water Conservation, 1991.

Water Quality Management Plan for the Lake Tahoe Region, Volume II, Handbook of Management Practices, Tahoe Regional Planning Agency - November 1988.

ESC24

Best Management Practices

Additional Information — Stabilized Construction Entrance

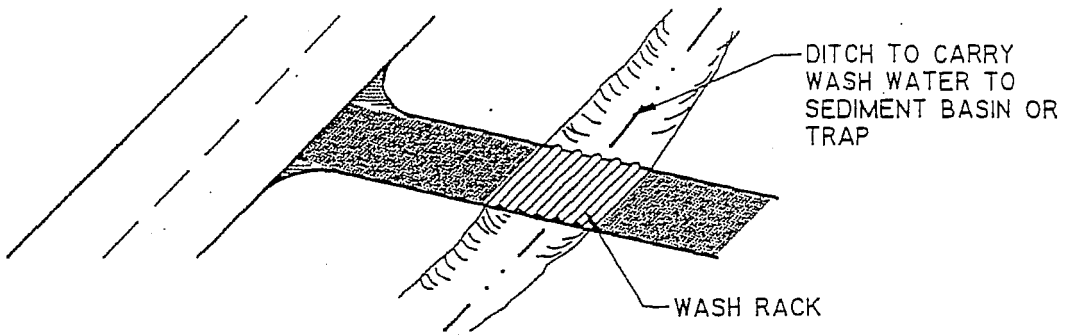

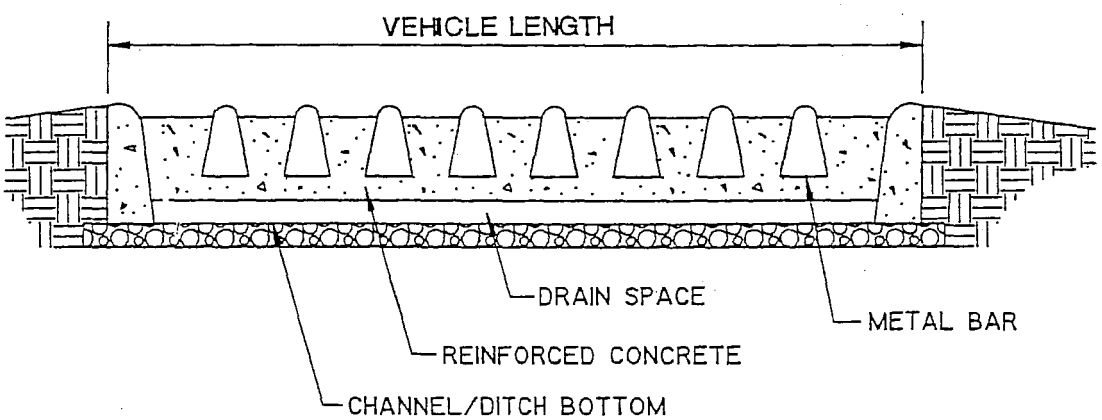

WASH RACK (SCHEMATIC)

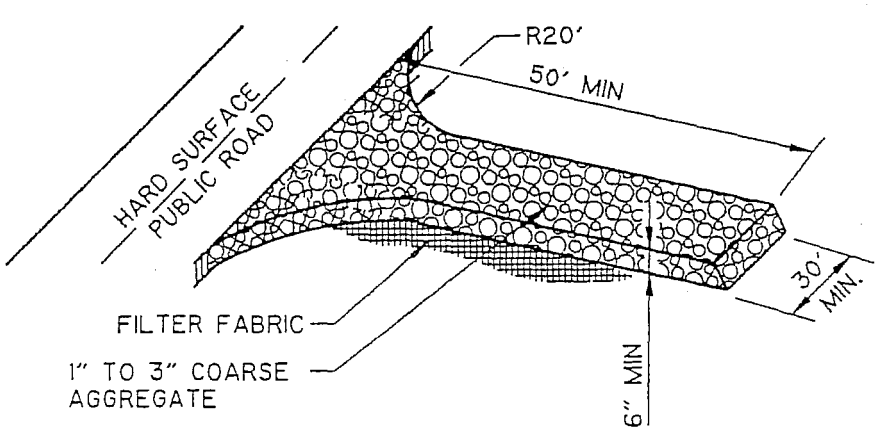

STABILIZED CONSTRUCTION ENTRANCE

ESC24

Best Management Practices

BMP: EARTH DIKE

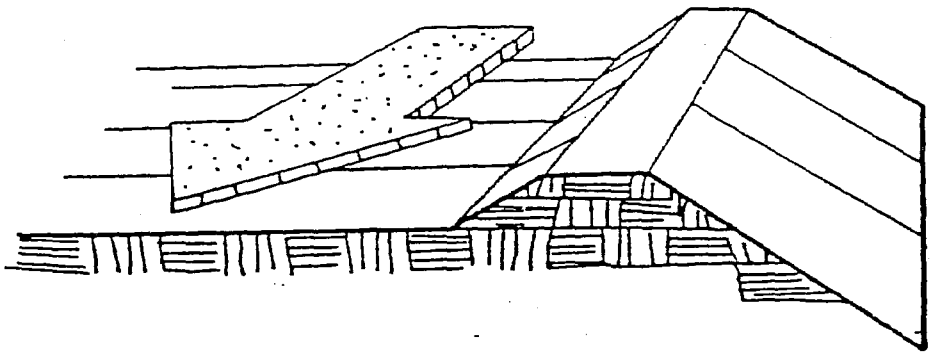

Objectives

- Housekeeping Practices
- (Contain Waste)
- Minimize Disturbed Areas
- Stabilize Disturbed Areas
- (Protect Slopes/Channels)
- (Control Site Perimeter)
- (Control Internal Erosion)

GENERAL DESCRIPTION

The temporary earth dike is a temporary berm or ridge of compacted soil, used to divert runoff or channel water to a desired location.

SUITABLE APPLICATIONS

Earth dikes are typically used to divert concentrated runoff through disturbed areas into another BMP (e.g., sediment basins), to divert runoff away from disturbed or unstable slopes, to divert runoff from off-site and undisturbed areas around disturbed areas, and as a containment for construction materials and wastes. The dikes should remain in place until the disturbed areas are permanently stabilized. The dikes must be on-site and must safely convey anticipated flood flows.

INSTALLATION/APPLICATION CRITERIA

- All dikes should be compacted by earth-moving equipment.
- All dikes should have positive drainage to a stabilized outlet.
- Top width may be wider and side slopes may be flatter at crossings for construction traffic.
- Dikes should direct sediment-laden runoff into a sediment trapping device.
- Dikes should be stabilized with vegetation, chemicals, or physical devices.

REQUIREMENTS

- Maintenance
  - Inspect periodically and after every significant rainfall; repair as necessary.
- Cost
  - Cost ranges from $15 to $55 per foot for both earthwork and stabilization and depends on availability of material, site location, and access.

LIMITATIONS

Dikes should not be used for drainage areas greater than 10 acres, or along slopes greater than 10 percent. For larger areas more permanent drainage structures should be built. All drainage structures should be built in compliance with local municipal requirements.

- Earth dikes may create more disturbed area on site and become barriers to construction equipment.
- Earth dikes must be stabilized immediately, which adds cost and maintenance concerns.
- Diverted storm water may cause downstream flood damage.
- Dikes should not be constructed of soils which may be easily eroded.
- Regrading the site to remove the dike may add additional cost.

Targeted Pollutants

- ● Sediment
- ○ Nutrients
- ◒ Toxic Materials
- ◒ Oil & Grease
- ○ Floatable Materials
- ◒ Other Construction Waste

● Likely to Have Significant Impact
○ Probable Low or Unknown Impact

Implementation Requirements

- ◒ Capital Costs
- ○ O&M Costs
- ◒ Maintenance
- ○ Training
- ◒ Suitability for Slopes >5%

● High ○ Low

ESC30

Best Management Practices

Additional Information — Earth Dike

The temporary earth dike is a berm or ridge of compacted soil, located in such a manner as to divert storm water to a sediment trapping device or stabilized outlet, thereby reducing the potential for erosion and offsite sedimentation. Earth dikes can also be used to divert runoff from off-site and from undisturbed areas away from disturbed areas, and to divert sheet flows away from unprotected slopes.

An earth dike does not itself control erosion or remove sediment from runoff; a dike prevents erosion by directing runoff to an erosion control device such as a sediment trap or directing runoff away from an erodible area. Temporary diversion dikes should not adversely impact adjacent properties and must conform to local floodplain management regulations, and should not be used in areas with slopes steeper than 10%.

- The advantages of the temporary earth dike include the ability to handle flows from large drainage areas.
- Once stabilized, earth dikes require relatively little maintenance. Additionally, the earth dikes are relatively inexpensive to install since the soil material required for construction may be available on-site, and can be constructed as part of the initial grading operations, while the equipment is on-site.
- Uses on-site materials.

Installation/Application Criteria

Temporary earth dikes are a practical, inexpensive BMP used to divert storm water runoff. Temporary diversion dikes should be installed in the following manner:

1. All dikes should be compacted by earth-moving equipment.
2. All dikes should have positive drainage to an outlet.
3. All dikes should have 2:1 side slopes, 18 inches minimum height, and a minimum top width of 24 inches. Top width may be wider and side slopes may be flatter at crossings for construction traffic.
4. The outlet from the earth dike must function with a minimum of erosion. Runoff should be conveyed to a sediment trapping device such as a sediment trap (ESC 55) or sediment basin (ESC 56) when either the dike channel or the drainage area above the dike are not adequately stabilized.
5. Temporary stabilization may be achieved using seed and mulching for slopes less than 5%, and either rip-rap or sod for slopes in excess of 5%. In either case, stabilization of the earth dike should be completed immediately after construction or prior to the first rain.
6. If riprap is used to stabilize the channel formed along the toe of the dike, the following typical specifications apply:

CHANNEL GRADE	RIPRAP STABILIZATION
0.5-1.0%	4" Rock
1.1-2.0%	6" Rock
2.1-4.0%	8" Rock
4.1-5.0%	8-12" Riprap

7. The stone riprap, recycled concrete, etc. used for stabilization should be pressed into the soil with construction equipment.
8. Filter cloth may be used to cover dikes in use for long periods.
9. Construction activity on the earth dike should be kept to a minimum.

REFERENCES

Best Management Practices and Erosion Control Manual for Construction Sites, Flood Control District of Maricopa County, Arizona, September 1992.

"Draft - Sedimentation and Erosion Control, An Inventory of Current Practices", U.S.E.P.A., April, 1990.

ESC30

Best Management Practices

Additional Information — Earth Dike

Erosion and Sediment Control Handbook, S.J. Goldman, K. Jackson, T.A. Bursetynsky, P.E., McGraw Hill Book Company.

Manual of Standards of Erosion and Sediment Control Measures, Association of Bay Area Governments, June 1981.

Water Quality Management Plan for the Lake Tahoe Region, Volume II, Handbook of Management Practices, Tahoe Regional Planning Agency - November 1988.

ESC30

Best Management Practices

Additional Information — Earth Dike

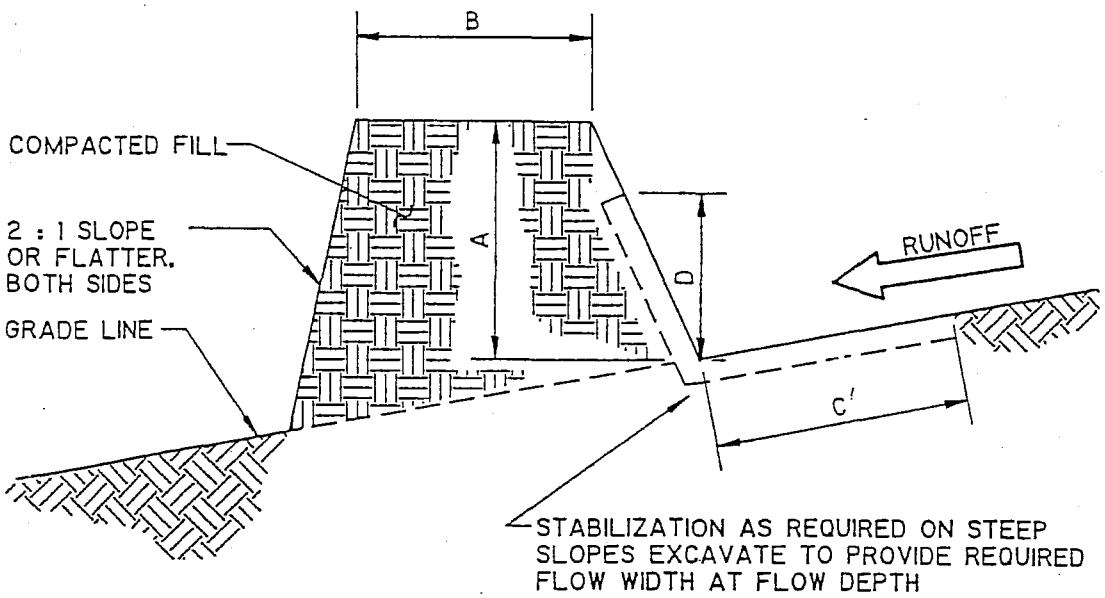

REQUIREMENTS BASED ON UPSTREAM DRAINAGE AREA

	DIKE 1 (5 ACRES OR LESS)	DIKE 2 (5-10 ACRES)
A-DIKE HEIGHT	18"	36"
B-DIKE WIDTH	24"	36"
C-FLOW WIDTH	4'	6'
D-FLOW DEPTH	8"	15"

TEMPORARY DIVERSION DIKE

ESC30

Best Management Practices

BMP: TEMPORARY DRAINS AND SWALES

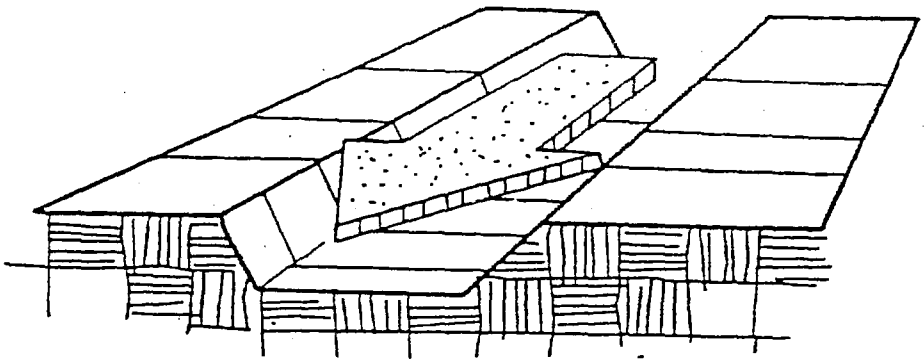

Objectives

- *Housekeeping Practices*
- *Contain Waste*
- *Minimize Disturbed Areas*
- *Stabilize Disturbed Areas*
- *Protect Slopes/Channels*
- *Control Site Perimeter*
- *Control Internal Erosion*

GENERAL DESCRIPTION

Temporary drains and swales are used to divert off-site runoff around the construction site, divert runoff from stabilized areas around disturbed areas, and direct runoff into sediment basins or traps.

SUITABLE APPLICATIONS

Temporary drains and swales are appropriate for diverting any upslope runoff around unstabilized or disturbed areas of the construction site:

- Prevent slope failures.
- Prevent damage to adjacent property.
- Prevents erosion and transport of sediments into water ways.
- Increases the potential for infiltration.
- Diverts sediment-laden runoff into sediment basins or traps.

INSTALLATION/APPLICATION CRITERIA

Temporary drainage swales will effectively convey runoff and avoid erosion if built properly:

- Size temporary drainage swales using local drainage design criteria.
- A permanent drainage channel must be designed by a professional engineer (see the local drainage design criteria for proper design).
- At a minimum, the drain/swale should conform to predevelopment drainage patterns and capacities.
- Construct the drain/swale with an uninterrupted, positive grade to a stabilized outlet.
- Provide erosion protection or energy dissipation measures if the flow out of the drain or swale can reach an erosive velocity.

REQUIREMENTS

- Maintenance
  - Inspect weekly and after each rain.
  - Repair any erosion immediately.
  - Remove sediment which builds up in the swale and restricts its flow capacity.
- Cost
  - The cost of a drainage swale increases with drainage area and slope. Typical. swales for controlling internal erosion are inexpensive.

LIMITATIONS

- Temporary drains and swales or any other diversion of runoff should not adversely impact upstream or downstream properties.
- Temporary drains and swales must conform to local floodplain management requirements.

Targeted Pollutants

- ● *Sediment*
- ○ *Nutrients*
- ○ *Toxic Materials*
- ○ *Oil & Grease*
- ○ *Floatable Materials*
- ○ *Other Construction Waste*

● *Likely to Have Significant Impact*
○ *Probable Low or Unknown Impact*

Implementation Requirements

- ◒ *Capital Costs*
- ○ *O&M Costs*
- ○ *Maintenance*
- ○ *Training*
- ◒ *Suitability for Slopes >5%*

● *High* ○ *Low*

ESC31

Best Management Practices

Additional Information — Temporary Drains and Swales

Slopes that are formed during cut and fill operations should be protected from erosion by runoff. A combination of a temporary drainage swale and an earth dike (see ESC30) at the top of a slope can safely divert runoff to a location where it can safely be brought to the bottom of the slope (see Pipe Slope Drain ESC32). A combination dike and swale is easily constructed by a single pass of a bulldozer or grader and compacted by a second pass of the tracks or wheels over the ridge. Diversion structures should be installed when the site is initially graded, and remain in place until post-construction BMPs are installed and/or the slopes are stabilized.

Diversion practices concentrate the volume of surface runoff, increasing its velocity and erosive force. Thus, the flow out of the drain or swale must be directed onto a stabilized area or into a grade stabilization structure. A swale should be stabilized using vegetation, chemical treatment, rock rip-rap, matting, or other physical means of stabilization, if significant erosion will occur. Any drain or swale which conveys sediment-laden runoff must be diverted into a sediment basin or trap before it is discharged from the site.

Installation/Application Criteria

Diversion drains or swales are only effective if they are properly installed. Swales are more effective than dikes because they tend to be more stable. The combination of a swale with a dike on the downhill side is the most cost-effective diversion.

Standard engineering design criteria for small open channel and closed conveyance systems should be used (see the local drainage design manual). Unless local drainage design criteria state otherwise, drains or swales should be designed as follows:

- No more than 5 acres may drain to a temporary drain or swale
- Place the drain or swale above, not on, a cut and fill slope
- Swale bottom width should be at least 2 ft
- Depth of the swale should be at least 18 inches
- Side slopes should be 2:1 or flatter
- Drain or swale should be layed at a grade of at least 1 percent, but not more than 15 percent
- The swale must not be overtopped by the 10-year, 24-hour storm, irrespective of the design criteria stated above
- Remove all trees, stumps, obstructions, and other objectionable material from the swale when it is built
- Compact any fill material along the path of the swale
- Stabilize all swales immediately. Seed and mulch swales at a slope of less than 5 percent, and use rip-rap or sod for swales with a slope between 5 and 15 percent
- Do not operate construction vehicles across a swale unless a stabilized crossing is provided.
- The cost of swales and other diversion devices is generally included in the earthwork cost, as a separate item under the grading budget of the project construction contract.

REFERENCES

Best Management Practices and Erosion Control Manual for Construction Sites, Flood Control District of Maricopa County, Arizona, September 1992.

"Draft - Sedimentation and Erosion Control, An Inventory of Current Practices", U.S.E.P.A., April, 1990.

Manual of Standards of Erosion and Sediment Control Measures, Association of Bay Area Governments, June 1981.

Stormwater Management Water for the Puget Sound Basin, Washington State Department of Ecology, The Technical Manual - February 1992, Publication # 91-75.

Water Quality Management Plan for the Lake Tahoe Region, Volume II, Handbook of Management Practices, Tahoe Regional Planning Agency - November 1988.

ESC31

Best Management Practices

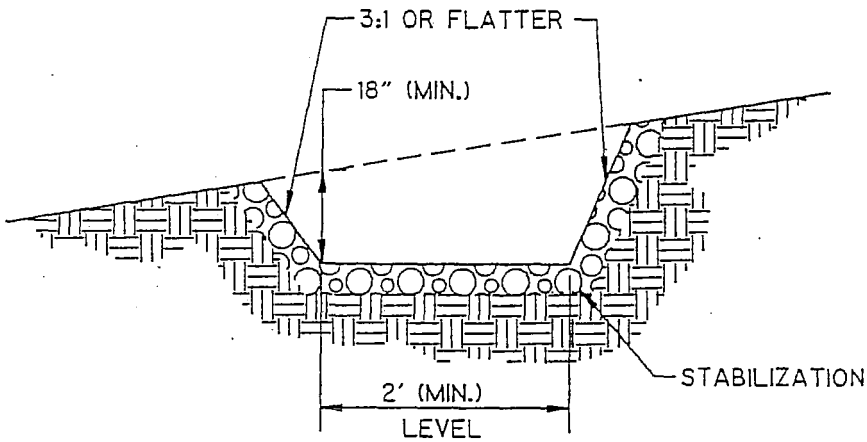

CROSS SECTION

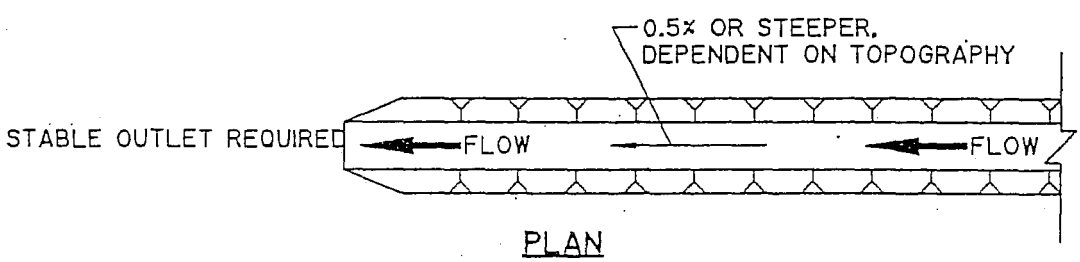

PLAN

TEMPORARY DRAINAGE SWALE

ESC31

Best Management Practices

BMP: SLOPE DRAIN

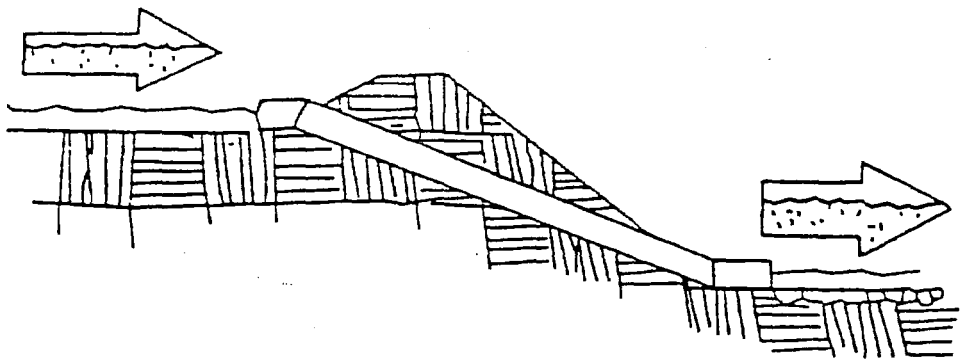

Objectives

- Housekeeping Practices
- Contain Waste
- Minimize Disturbed Areas
- Stabilize Disturbed Areas
- Protect Slopes/Channels
- Control Site Perimeter
- Control Internal Erosion

GENERAL DESCRIPTION

A temporary pipe or lined channel to drain the top of a slope to a stable discharge point at the bottom of a slope without causing erosion.

SUITABLE APPLICATIONS

- Where concentrated flow of surface runoff must be conveyed down a slope in order to prevent erosion.
- Drainage for top of slope diversion dikes or swales.
- Emergency spillway for a sediment basin.
- Drainage for top of cut/fill slopes where water can accumulate.

The types of slope drain can include:

- Pipe drops.
- Flexible downdrains.
- Sectional downdrains.
- Lined terrace drains.

INSTALLATION/APPLICATION CRITERIA

- Secure inlet and surround with dikes to prevent gully erosion, and anchor pipe to slope.
- Size to convey at least the peak of a 10-year, 24-hour storm (See local flood control agency for requirements).
- Stabilize outlet.

REQUIREMENTS

- Maintenance
  - Structure must be inspected regularly and after storms.
  - Inlet must be free of undercutting and no water should circumvent the entry.
  - Outlet should not produce erosion; velocity dissipators must be maintained.
  - Pipe anchors must be checked to ensure that the pipe remains anchored to the slope.
- Cost
  - CalTrans Cost Schedule gives regional cost ranges.

LIMITATIONS

- Maximum drainage area per slope drain is 5 acres. (For large areas use a paved chute, rock lined channel or additional pipes.)
- Clogged slope drains will force water around the pipe and cause slope erosion.
- Dissipation of high flow velocities at the pipe outlet is required to avoid downstream erosion.
- Failure can result in flooding and severe erosion.

Targeted Pollutants

- ● Sediment
- ○ Nutrients
- ○ Toxic Materials
- ○ Oil & Grease
- ○ Floatable Materials
- ○ Other Construction Waste

● Likely to Have Significant Impact
○ Probable Low or Unknown Impact

Implementation Requirements

- ◒ Capital Costs
- ○ O&M Costs
- ◒ Maintenance
- ○ Training
- ◒ Suitability for Slopes >5%

● High ○ Low

ESC32

Best Management Practices

Additional Information — Slope Drain

The slope drain may be a rigid pipe, such as corrugated metal, a flexible conduit, or a lined terrace drain with the inlet placed on the top of a slope. The drain conveys concentrated runoff down to the bottom of the slope. The BMP typically is used in combination with a diversion control, such as a temporary dike or swale, at the top of the slope, and serves as a temporary BMP to reduce or eliminate slope erosion until permanent BMPs are installed and the slope is stabilized.

The slope drain is applicable for any construction site where concentrated surface runoff can accumulate and must be conveyed down the slope in order to prevent erosion. The slope drain is effective because it prevents the stormwater from flowing directly down the slope by confining all the runoff into an enclosed pipe or channel. Due to the time lag between grading slopes and installation of permanent storm water collection systems and slope stabilization measures, temporary provisions to intercept runoff are sometimes necessary. Particularly in steep terrain, slope drains can protect unstabilized areas from erosion. Typical uses include:

- Emergency spillway for a sediment basin.
- Drainage for top of cut/fill slopes where storm water can accumulate and must be conveyed down the slope.

Installation/Application Criteria

Temporary slope drains are highly effective in eliminating slope erosion. Installation and maintenance requirements are small, especially when flexible pipe is used. General criteria:

- Gully erosion is the major problem with slope drains. Inlet structures must be securely entrenched and compacted to avoid severe gully erosion.
- The drain must be securely anchored to the slope and must be adequately sized to carry the capacity of the design storm and associated forces.
- The outlet must be stabilized with rip-rap, concrete or other type of energy dissipator, or directed into a stable sediment trap or basin.
- A debris rack is recommended at the inlet, and should be encouraged for larger pipes and at the outlet as a safety device to prevent small children from entering the pipe.

Materials:

Material selection and criteria for the pipe slope drain is often established by the local municipality. Soil type, rainfall patterns, construction schedule, and available supply are some of the factors to be considered. The following types of slope drains are commonly used:

- Rigid Pipe: This type of slope drain is also known as a pipe drop. The pipe usually consists of corrugated metal pipe or rigid plastic pipe. The pipe is placed on undisturbed or compacted soil and secured into the slope. One foot minimum cover is required on the pipe, and concrete thrust blocks must be used when required by the municipality or warranted by the calculated thrust forces. Collars should be properly installed and secured with metal strappings or watertight collars.
- Flexible Pipe: The flexible pipe slope drain consists of a flexible conduit of heavy duty material. The conduit material is securely anchored into the slope and connections are watertight. The conduit should be securely fastened to the metal inlet and outlet conduit sections with metal strappings or water tight collars.
- Sectional Downdrains: The sectional downdrain consists of pre-fabricated, sectional conduit of half-round or third-round material. The sectional downdrain performs similar to a flume or chute. The pipe must be placed on undisturbed or compacted soil and secured into the slope.
- Concrete-lined Terrace Drain: This is a concrete channel for draining water from a terrace on a slope to the next level. These drains are after permenant structures which should be designed according to local drainage design criteria.

ESC32

Best Management Practices

Additional Information — Slope Drain

Design:
Unless specified by the local municipality, the capacity for temporary drains should be sufficient to handle the peak runoff from a 10-year, 24-hour rainfall event. The pipe size may be computed using the Rational Method or a method established by the local municipality. Higher flows must be safely stored or routed to prevent any offsite concentration of flow, and any erosion of the slope.

As a guide, temporary pipe slope drains should not be sized smaller than shown in the following table:

MINIMUM PIPE DIAMETER	MAXIMUM DRAINAGE AREA (ACRES)
12"	0.5
18"	1.5
21"	2.5
24"	3.5
30"	5.0

Permanent improvements must be designed and installed if the drainage area is greater than 5 acres.

The following additional design criteria should be considered:

- Construct the pipe slope drain entrance of a standard flared end section with a minimum 6-inch metal toe plate to prevent runoff from undercutting the pipe inlet. The slope of the entrance is usually at least 3 percent.
- Thoroughly compact the soil around and under the pipe and entrance section.
- Securely fasten the slope drain sections together, have gasketed watertight fittings, and securely anchored into the soil.
- Secure the flared inlet section to the slope drain and have watertight connecting bands.
- Use interceptor dikes to direct runoff into a slope drain. The height of the dike should be at least 1 foot higher at all points than the top of the inlet pipe.
- If the pipe slope drain is conveying sediment-laden water, direct all flows into a sediment trap (ESC55) or sediment basin (ESC56).
- Unless the pipe directly enters a sediment trap/basin, stabilize the area below the outlet with a riprap apron.

Limitations
Installation is critical for effective use of the pipe slope drain to minimize potential gully erosion. Maximum drainage area per pipe slope drain is 5 acres. For larger areas use a paved chute, rock lined channel or additional pipes. (See the local municipality for drainage requirements)

- During large storms, pipe slope drains may become clogged or overcharged, forcing water around the pipe and causing extreme slope erosion.
- Structures for dissipation of high flow velocities at the pipe outlet must be constructed to avoid downstream erosion.
- Failure of this type of temporary structure may result in flooding and severe erosion.
- If the sectional downdrain is not sized correctly, the runoff can spill over the drain sides causing gully erosion, and potential failure of the structure.

ESC32

Best Management Practices

Additional Information — Slope Drain

REFERENCES

Best Management Practices and Erosion Control Manual for Construction Sites, Flood Control District of Maricopa County, Arizona, September 1992.

"Draft - Sedimentation and Erosion Control, An Inventory of Current Practices", U.S.E.P.A., April, 1990.

Stormwater Management Water for the Puget Sound Basin, Washington State Department of Ecology, The Technical Manual - February 1992, Publication # 91-75.

Water Quality Management Plan for the Lake Tahoe Region, Volume II, Handbook of Management Practices, Tahoe Regional Planning Agency - November 1988.

ESC32

Best Management Practices

Additional Information — Slope Drain

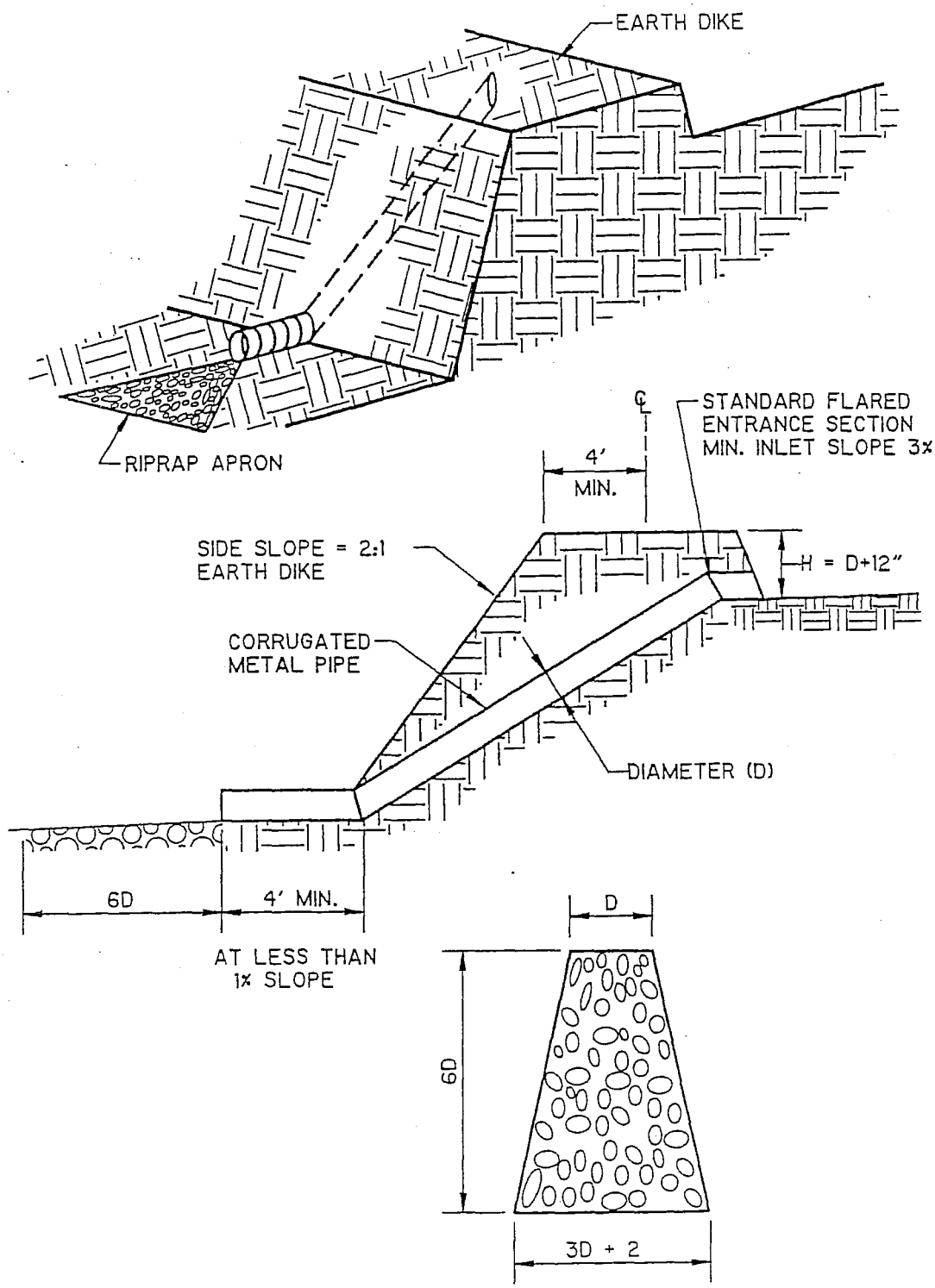

RIPRAP SHOULD CONSIST OF 6" DIAMETER STONE PLACED AS SHOWN AND SHOULD BE A MINIMUM OF 12" IN THICKNESS.

PIPE SLOPE DRAIN (RIGID)

ESC32

Best Management Practices

Additional Information — Slope Drain

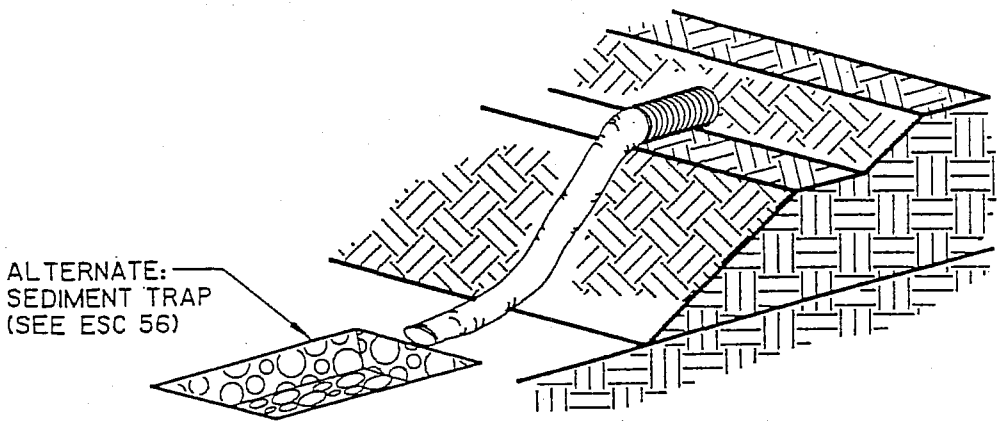

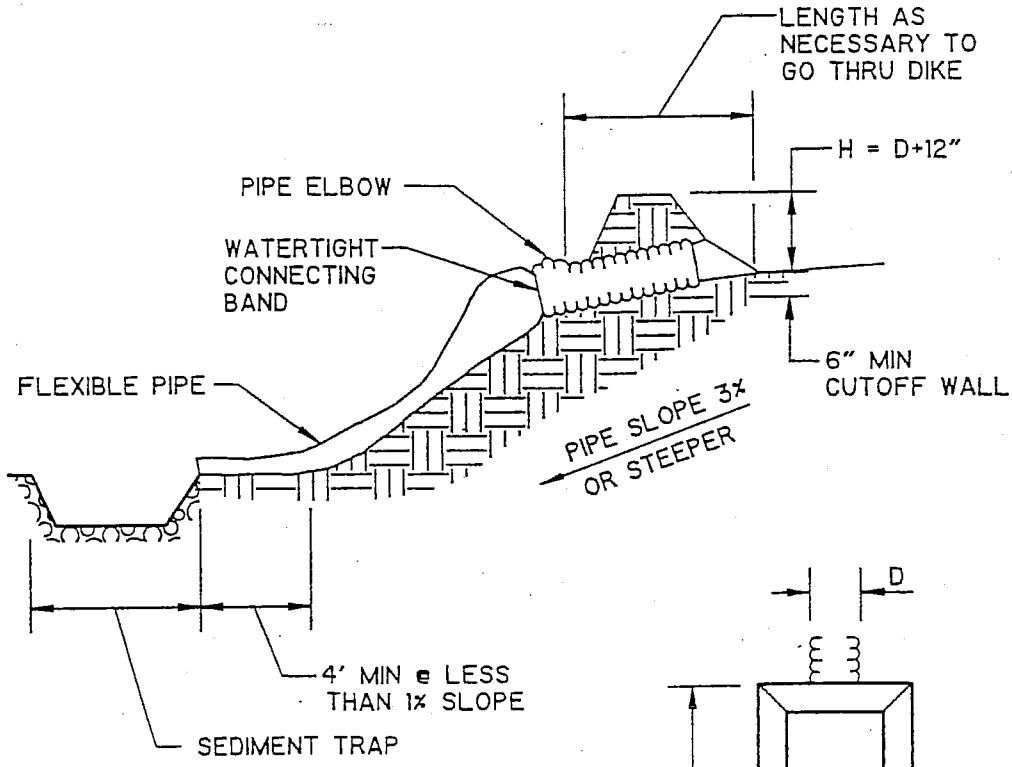

RIPRAP SHOULD CONSIST OF 6" DIA STONE PLACED AS SHOWN. DEPTH OF APRON SHOULD EQUAL THE PIPE DIA AND RIPRAP SHALL BE A MINIMUM OF 12" IN THICKNESS.

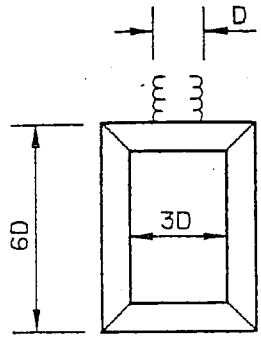

ALTERNATIVE SEDIMENT TRAP: RIPRAP PLAN

PIPE SLOPE DRAIN (FLEXIBLE)

ESC32

Best Management Practices

BMP: OUTLET PROTECTION

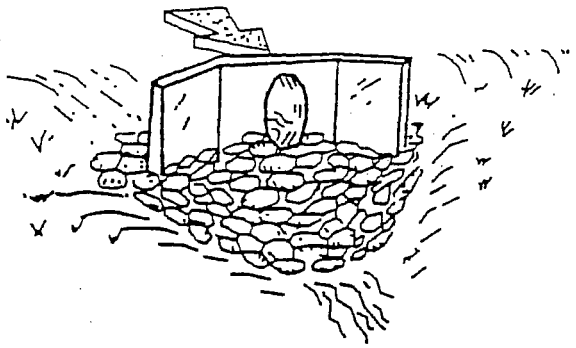

Objectives

- *Housekeeping Practices*
- *Contain Waste*
- *Minimize Disturbed Areas*
- *Stabilize Disturbed Areas*
- *Protect Slopes/Channels*
- *Control Site Perimeter*
- *Control Internal Erosion*

GENERAL DESCRIPTION

Rock outlet protection is a physical device composed of rock, grouted riprap, or concrete rubble which is placed at the outlet of a pipe to prevent scour of the soil caused by high pipe flow velocities, and to absorb flow energy to produce non-erosive velocities.

SUITABLE APPLICATIONS

- Wherever discharge velocities and energies at the outlets of culverts, conduits or channels are sufficient to erode the next downstream reach.
- Rock outlet protection is best suited for temporary use during construction because it is usually less expensive and easier to install than concrete aprons or energy dissipators.
- A sediment trap below the pipe outlet is recommended if runoff is sediment laden.
- Permanent rock riprap protection should be designed and sized by the engineer as part of the culvert, conduit or channel design.
- Grouted riprap should be avoided in areas of freeze and thaw because the grout will break up.

INSTALLATION/APPLICATION CRITERIA

Rock outlet protection is effective when the rock is sized and placed properly. When this is accomplished, rock outlets do much to limit erosion at pipe outlets. Rock size should be increased for high velocity flows. General recommendations for rock size and length of outlet protection mat are presented in the additional information sheet. Best results are obtained when sound, durable, angular rock is used. CalTrans Standard Specifications or the local municipality can provide additional specifications for constructing outlet protection devices.

REQUIREMENTS

- Maintenance
  - Inspect after each significant rain for erosion and/or disruption of the rock, and repair immediately.
  - Grouted or wire-tied rock riprap can minimize maintenance requirements.
- Cost
  - CalTrans Cost Schedule gives regional cost ranges.

LIMITATIONS

- Large storms often wash away the rock outlet protection and leave the area susceptible to erosion.
- Sediment captured by the rock outlet protection may be difficult to remove without removing the rock.
- Outlet protection may negatively impact the channel habitat.

Targeted Pollutants

- ● *Sediment*
- ○ *Nutrients*
- ○ *Toxic Materials*
- ○ *Oil & Grease*
- ○ *Floatable Materials*
- ○ *Other Construction Waste*

- ● *Likely to Have Significant Impact*
- ○ *Probable Low or Unknown Impact*

Implementation Requirements

- ◒ *Capital Costs*
- ○ *O&M Costs*
- ◒ *Maintenance*
- ○ *Training*
- ○ *Suitability for Slopes >5%*

● *High* ○ *Low*

ESC40

Best Management Practices

Additional Information — Outlet Protection

Outlet protection is needed where discharge velocities and energies at the outlets of culverts, conduits or channels are sufficient to erode the immediate downstream reach. This practice protects the inlet or outlet from developing small eroded pools (plange pools), and protects against gully erosion resulting from scouring at a culvert mouth.

Rock outlet protection is usually less expensive and easier to install than concrete aprons or energy dissipators. It also serves to trap sediment and reduce flow velocities.

As with most channel design projects, depth of flow, roughness, gradient, side slopes, discharge rate and velocity should be considered in the outlet design. Compliance to local and state regulations should also be considered while working in environmentally sensitive streambeds. General recommendations for rock size and length of outlet protection mat is shown in the rock outlet protection figure. Best results are obtained when sound, durable, angular rock is used. Rock depth and outlet protection length are governed by the discharge pipe size, but hydraulic calculations and velocities should be used to determine length. Your local municipality or CalTrans should be consulted for appropriate sizing criteria in your area.

REFERENCES

Best Management Practices and Erosion Control Manual for Construction Sites, Flood Control District of Mariposa County, Arizona, September 1992.

County of Sacramento Improvement Standards, Sacramento County - May 1989.

Environmental Criteria Manual, City of Austin, TX, 1989.

Erosion and Sediment Control Handbook, S.J. Goldman, K. Jackson, T.A. Bursztynsky, P.E., McGraw Hill Book Company, 1986.

Handbook of Steel Drainage & Highway Construction, American Iron and Steel Institute, 1983.

Manual of Standards of Erosion and Sediment Control Measures, Association of Bay Area Governments, Jun 1981.

Stormwater Management Water for the Puget Sound Basin, Washington State Department of Ecology, The Technical Manual - February 1992, Publication # 91-75.

Water Quality Management Plan for the Lake Tahoe Region, Volume II, Handbook of Management Practices, Tahoe Regional Planning Agency - November 1988.

ESC40

Best Management Practices

Additional Information — Outlet Protection

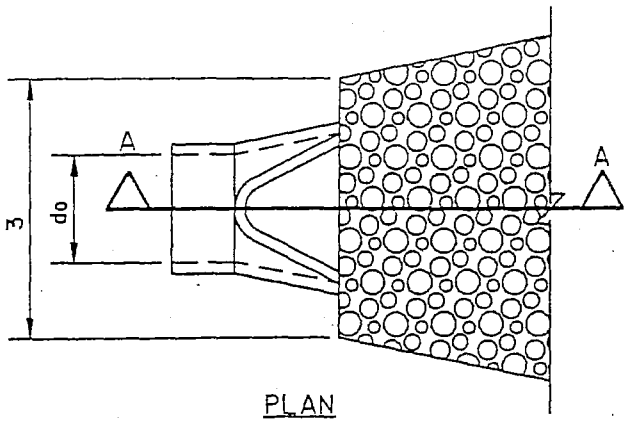

PLAN

La = LENGTH OF APRON
do = INSIDE PIPE DIAMETER
w = APRON WIDTH
d = APRON THICKNESS

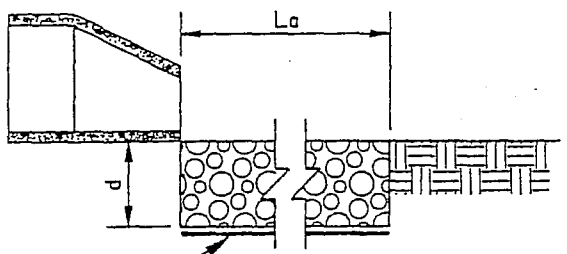

FILTER FABRIC — SECTION A-A

PIPE OUTLET TO FLAT AREA WITH NO DEFINED CHANNEL

NOTES

1. APRON LINING MAY BE RIPRAP, GROUTED RIPRAP, OR CONCRETE

2. PIPE DIAMETER, APRON DIMENSIONS, AND AVERAGE ROCK SIZE FOR RIPRAP ARE BASED ON THE DESIGN FLOW RATE AND VELOCITY. La AND ROCK SIZE MUST BE SET TO SLOW THE FLOW TO NON-EROSIVE VELOCITIES (e.g., LESS THAN 10 fps). SEE CALTRANS AND LOCAL AGENCY DESIGN CRITERIA FOR APPROPRIATE SIZING CRITERIA.

3. d = 1.5 TIMES THE MAXIMUM ROCK SIZE DIAMETER BUT NOT LESS THAN 6 INCHES.

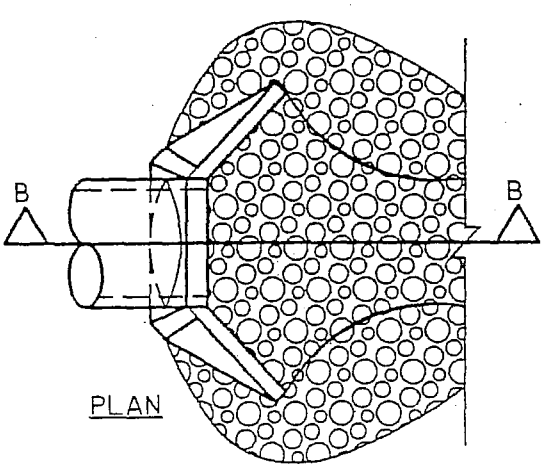

PLAN

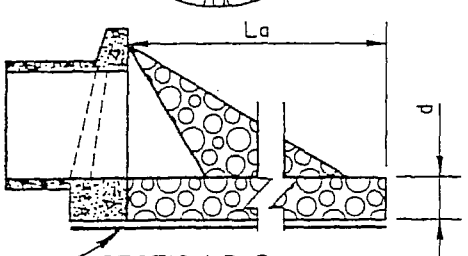

FILTER FABRIC — SECTION B-B

PIPE OUTLET TO WELL-DEFINED CHANNEL

PIPE OUTLET CONDITIONS

ESC40

Best Management Practices

BMP: CHECK DAMS

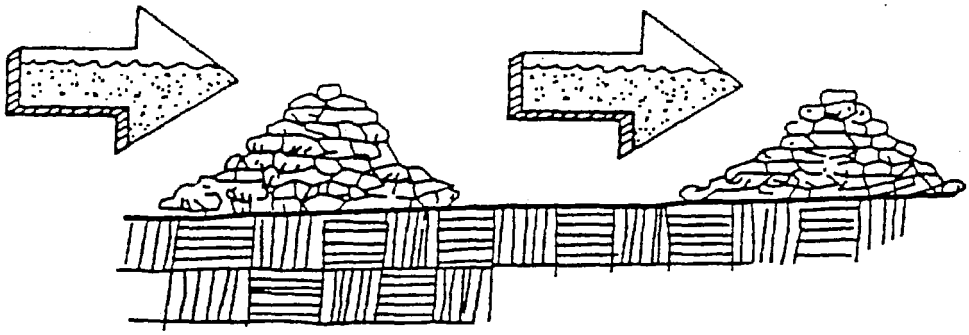

Objectives

- *Housekeeping Practices*
- *Contain Waste*
- *Minimize Disturbed Areas*
- *Stabilize Disturbed Areas*
- *Protect Slopes/Channels*
- *Control Site Perimeter*
- *Control Internal Erosion*

GENERAL DESCRIPTION

Small temporary dams constructed across a swale or drainage ditch. Check dams reduce the velocity of concentrated stormwater flows, thereby reducing erosion of the swale or ditch, and promoting sedimentation behind the dam. If properly anchored, brush or rock filter berms (ESC53) may be used for check dams.

SUITABLE APPLICATIONS

- Used to prevent erosion by reducing the velocity of channel flow in small intermittent channels and temporary swales.
- May also promote sedimentation behind the dam, but should not be considered to be a primary sediment trapping device because subsequent storms will scour and resuspend much of the trapped sediment.

INSTALLATION/APPLICATION CRITERIA

- Check dams should be placed at a distance and height to allow small pools to form between each one.
- Backwater from a downstream check dam should reach the toe of the upstream check dam.
- Major floods (2 year storm or larger) should safely flow over the check dam without an increase in upstream flooding or destruction of the checkdam.
- Primarily used in small, steep channels where velocities exceed 2 fps.
- Used in steep terrain where velocity reduction is required.
- A deep sump may be provided immediately upstream of the check dam to capture excessive sediment.
- Check dams may be built of rocks or logs, which are secured against damage during significant floods.

REQUIREMENTS

- Maintenance
  - Inspect for sediment buildup behind the check dam and signs of erosion around the check dam after each rain.
  - Remove accumulated sediment whenever it reaches one-half the sump depth.
- Cost
  - See CalTrans Cost Schedule for regional cost data.

LIMITATIONS

- Use only in small open channels which drain 10 acres of less.
- Not to be used in live streams.
- Do not install in lined or vegetated channels.

Targeted Pollutants

- ● *Sediment*
- ○ *Nutrients*
- ○ *Toxic Materials*
- ○ *Oil & Grease*
- ○ *Floatable Materials*
- ○ *Other Construction Waste*

- ● *Likely to Have Significant Impact*
- ○ *Probable Low or Unknown Impact*

Implementation Requirements

- ◒ *Capital Costs*
- ○ *O&M Costs*
- ◒ *Maintenance*
- ○ *Training*
- ○ *Suitability for Slopes >5%*

● *High* ○ *Low*

ESC41

Best Management Practices

Additional Information — Check Dams

Check dams create small pools in swales and ditches which drain 10 acres or less. These pools reduce the velocity of storm water flows, thus reducing erosion of the swale/ditch. Sedimentation also occurs in these small pools, but probably results in little net sediment removal because of the small detention time and probable scour during longer storms. A sediment trap (ESC55) may be placed immediately upstream of the check dam to increase sediment removal efficiency (but never in a natural stream or channel). Check dams should not be placed in swales/ditches with a base flow during some or all of the year.

Installation/Application Criteria

Check dams must be sized and constructed correctly and maintained properly, or they will be either washed out or cause flooding. Check dams can be constructed of either rock or logs. Use of other natural materials available on-site that can withstand the stormwater flow velocities is acceptable, such as pea-gravel filled in sand bags. Check dams should not be constructed from straw bales or silt fences, since concentrated flows quickly wash out these materials.

A sediment trap (ESC55) may be installed immediately upstream of the check dam, but may be of limited effectiveness if channel flows are large enough to scour the trap during moderate to large storms. Maximum velocity reduction is achieved if the toe of the upstream dam is at the same elevation as the top of the downstream dam. The center section of the dam should be lower than the edge sections so that the check dam will act like a weir during major floods.

Rock check dams are usually constructed of appropriately 8"-12" rock. The rock is placed either by hand or mechanically, but never just dumped into the channel. The dam must completely span the ditch or swale to prevent washout. The rock used must be large enough to stay in place given the expected design flow through the channel.

Log check dams are usually constructed of 4 to 6-inch diameter logs. The logs should be embedded into the soil at least 18 inches.

If grass is planted to stabilize the ditch or swale, the check dam should be removed when the grass has matured (unless the slope of the swale is greater than 4 percent).

REFERENCES

Best Management Practices and Erosion Control Manual for Construction Sites, Flood Control District of Mariposa County, Arizona, September 1992.

"Draft - Sedimentation and Erosion Control, An Inventory of Current Practices", U.S.E.P.A., April, 1990.

Manual of Standards of Erosion and Sediment Control Measures, Association of Bay Area Governments, June 1981.

Stormwater Management Water for the Puget Sound Basin, Washington State Department of Ecology, The Technical Manual - February 1992, Publication # 91-75.

Water Quality Management Plan for the Lake Tahoe Region, Volume II, Handbook of Management Practices, Tahoe Regional Planning Agency - November 1988.

ESC41

Best Management Practices

Additional Information — Check Dams

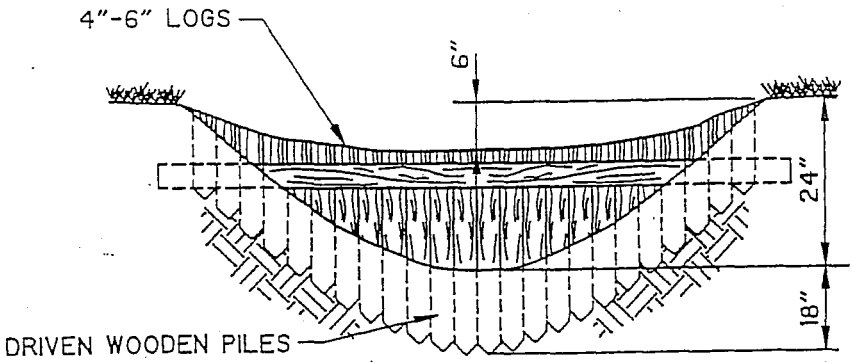

LOG CHECK DAM

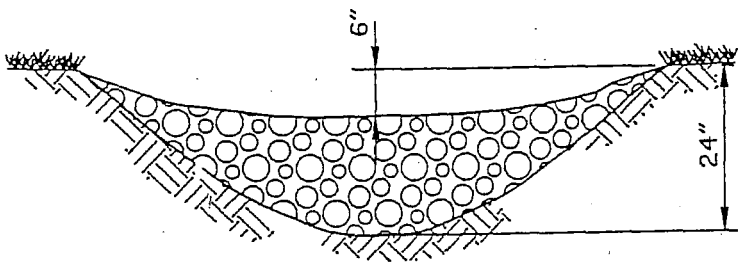

ROCK CHECK DAM

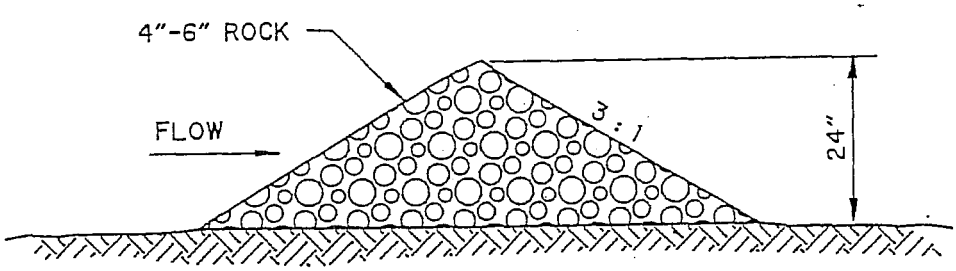

ROCK CHECK DAM CROSS-SECTION

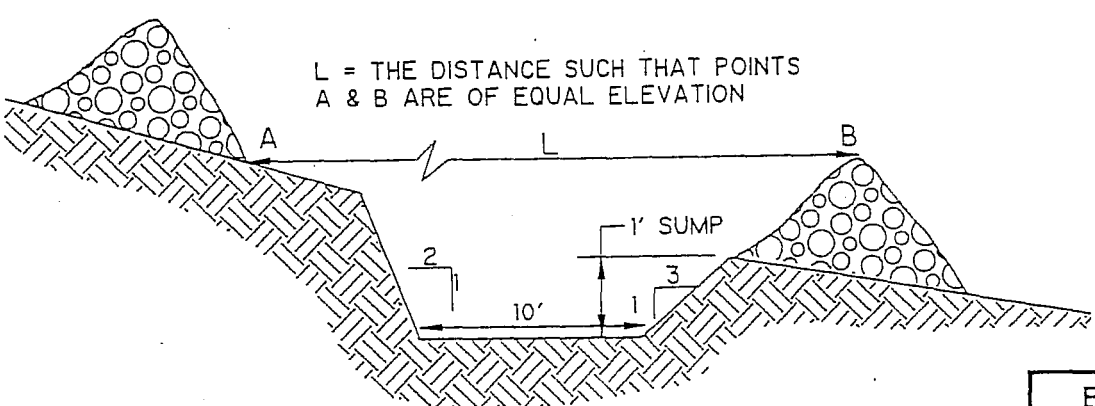

SPACING BETWEEN CHECK DAMS

ESC41

Best Management Practices

BMP: SLOPE ROUGHENING/TERRACING

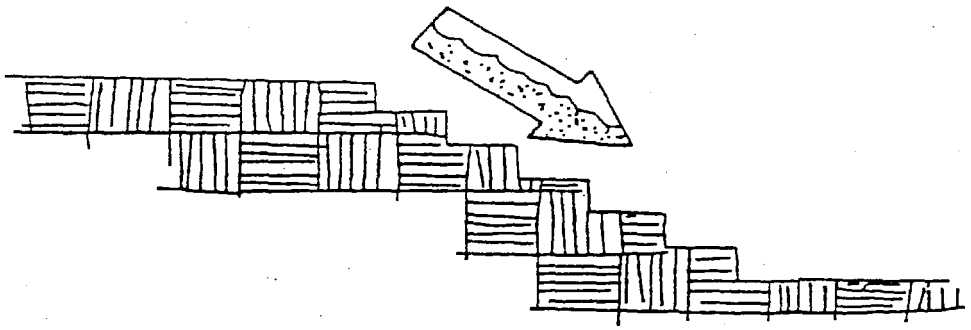

Objectives

- *Housekeeping Practices*
- *Contain Waste*
- *Minimize Disturbed Areas*
- *Stabilize Disturbed Areas* (●)
- *Protect Slopes/Channels* (●)
- *Control Site Perimeter*
- *Control Internal Erosion*

GENERAL DEFINITION

Slope roughening/terracing creates microclimates for establishing vegetation, reduces runoff velocity, increases infiltration, and provides small depressions for trapping sediment.

SUITABLE APPLICATIONS

- Any cleared area prior to seeding and planting.
- Required for cleared, erodible slopes steeper than 3:1 and higher than 5 feet prior to seeding and planting.

INSTALLATION/APPLICATION CRITERIA

Slope roughening/terracing is performed in several ways:

- Stair-step grading.
- Grooving.
- Furrowing.
- Tracking.
- Rough grading.
- No grading.

REQUIREMENTS

- Maintenance
  - Inspect roughened slopes weekly and after rainfall for excessive erosion.
  - Revegetate as quickly as possible.
- Cost (source: EPA, 1992)
  - Surface Roughening: Performed at no (e.g., rough grading) to low (e.g., tracking) cost.
  - Terracing: Average annual cost is $4 per linear foot (2 year useful life).

LIMITATIONS

- Roughening is of limited effectiveness on its own, but is used to speed revegetation.

Targeted Pollutants

- ● *Sediment*
- ○ *Nutrients*
- ○ *Toxic Materials*
- ○ *Oil & Grease*
- ○ *Floatable Materials*
- ○ *Other Construction Waste*

● *Likely to Have Significant Impact*
○ *Probable Low or Unknown Impact*

Implementation Requirements

- ○ *Capital Costs*
- ○ *O&M Costs*
- ○ *Maintenance*
- ○ *Training*
- ● *Suitability for Slopes >5%*

● *High* ○ *Low*

ESC42

Best Management Practices

Additional Information — Slope Roughening/Terracing

Slope roughening/terracing creates uneven depressions, steps or grooves on the soil surface to aid in establishment of vegetation, reduce runoff velocity, increase infiltration, and provide for sediment trapping.

Surface roughening may be applied to all slopes steeper than 3:1, and greater than 5 vertical feet, providing some instant erosion protection on bare soil while vegetative cover is being established. It is an inexpensive, simple and short-term erosion control measure for roadway cut slopes.

Terracing usually is a more permanent measure used to stabilize a steep slope. Terraces should be designed by a registered professional engineer and included in the project construction plans. Local design criteria should be used.

Installation/Application

Graded areas with smooth, hard surfaces give a false impression of "finished grading" and a job well done. It is difficult to establish vegetation on such surfaces due to reduced water infiltration and the potential for erosion. Rough slope surfaces with uneven soil and rocks left in place may appear unattractive or unfinished at first, but they encourage water infiltration, speed the establishment of vegetation, and decreased runoff velocity. Rough, loose soil surfaces give lime, fertilizer, and seed some natural coverage. Niches in the surface provide microclimates which generally provide a cooler and more favorable moisture level than hard flat surfaces; this aids seed germination.

There are different methods for achieving a roughened soil surface on a slope, and the selection of an appropriate method depends upon the type of slope. Roughening methods include stair-step grading, grooving, and tracking. Factors to be considered in choosing a method are slope steepness, mowing requirements, and whether the slope is formed by cutting or filling.

1. Disturbed areas which will not require mowing may be stair-step graded, grooved, or left rough after filling.
2. Graded areas steeper than 3:1 should be stair-stepped with benches (See figure at end of fact sheet). The stair-steping will help vegetation become attached and also trap soil eroded from the slopes above. Stair-step grading is particularly appropriate in soils containing large amounts of soft rock. Each "step" catches material which sloughs from above, and provides a level site where vegetation can become established. Stairs should be wide enough to work with standard earth moving equipment.
3. Areas which will be mowed (there areas should have slopes less than 3:1) may have small furrows left by disking, harrowing, raking, or seed-planting machinery operated on the contour.
4. It is important to avoid excessive compacting of the soil surface when scarifying. Tracking with bulldozer treads is preferable to not roughening at all, but is not as effective as other forms of roughening, as the soil surface is severely compacted and runoff is increased. Tracking can be accomplished in a variety of ways, including "track walking," or driving a crawler tractor up and down the slope, in leaving a pattern of cleat imprints parallel to slope contours.

REFERENCES

Best Management Practices and Erosion Control Manual for Construction Sites, Flood Control District of Maricopa County, Arizona, September 1992.

Handbook of Steel, Drainage & Highway Construction, American Iron and Steel Institute, 1983.

Proposed Guidance Specifying Management Measures for Sources of Nonpoint Pollution in Coastal Waters, Work Group Working Paper, USEPA, April, 1992.

Stormwater Management Water for the Puget Sound Basin, Washington State Department of Ecology, The Technical Manual - February 1992, Publication # 91-75.

ESC42

Best Management Practices

Additional Information — Slope Roughening/Terracing

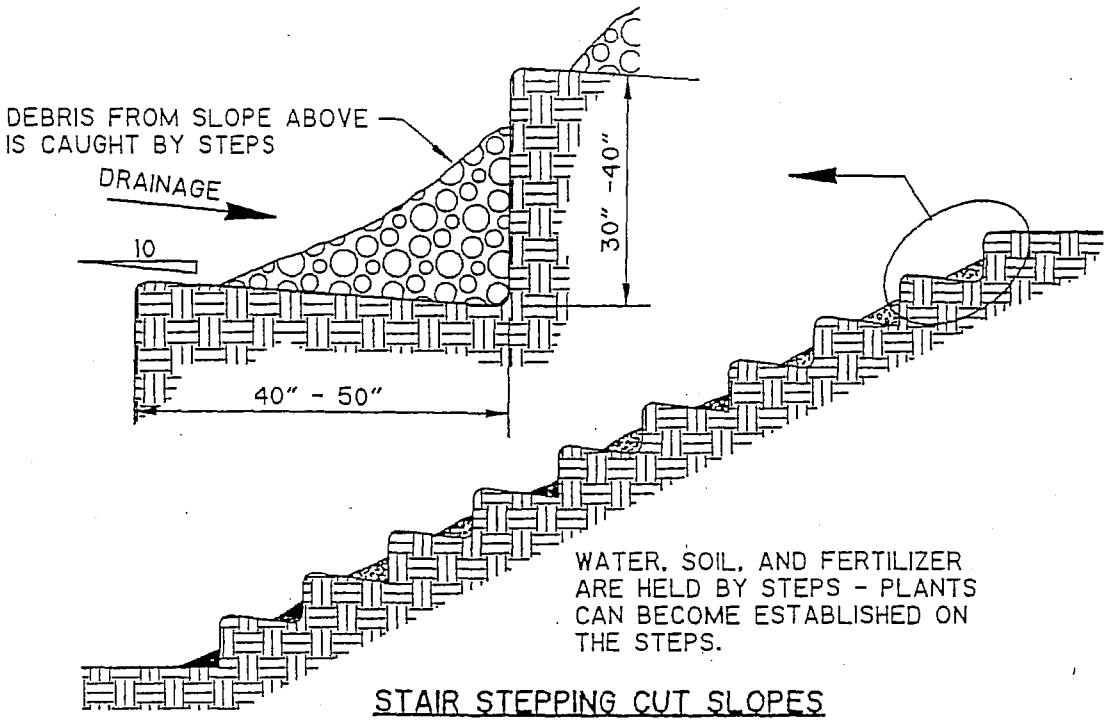

STAIR STEPPING CUT SLOPES

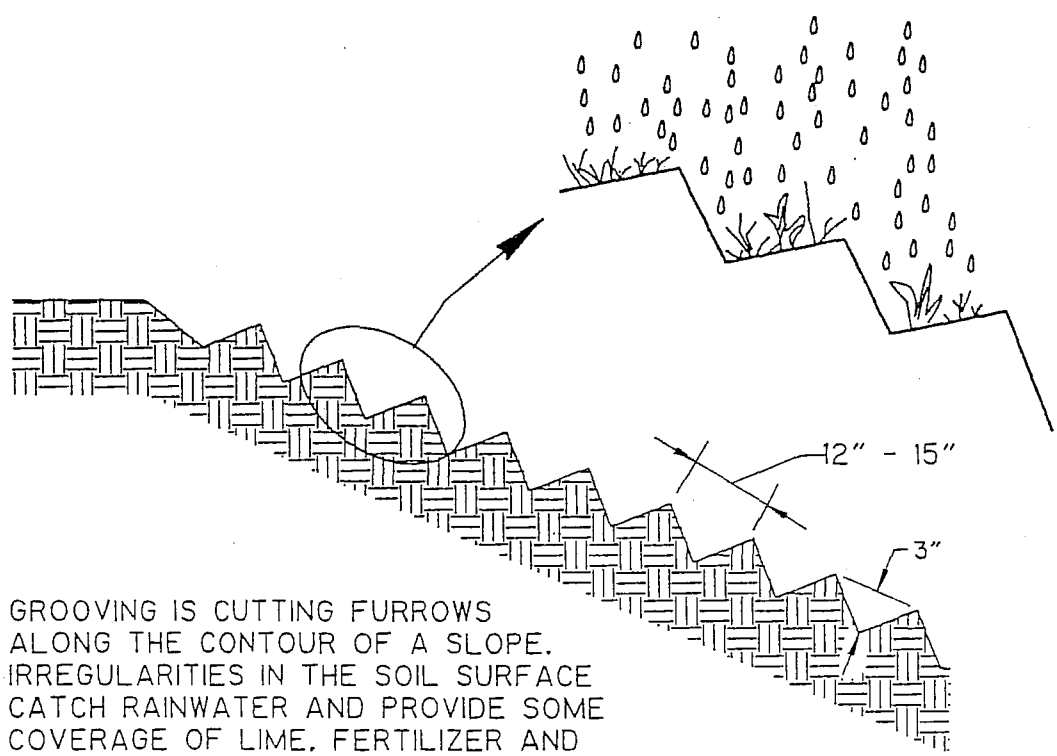

GROOVING IS CUTTING FURROWS ALONG THE CONTOUR OF A SLOPE. IRREGULARITIES IN THE SOIL SURFACE CATCH RAINWATER AND PROVIDE SOME COVERAGE OF LIME, FERTILIZER AND SEED.

GROOVING SLOPES

ESC42

Best Management Practices

STAIR-STEPPING CUT SLOPES AND GROOVING SLOPES

BMP: SILT FENCE

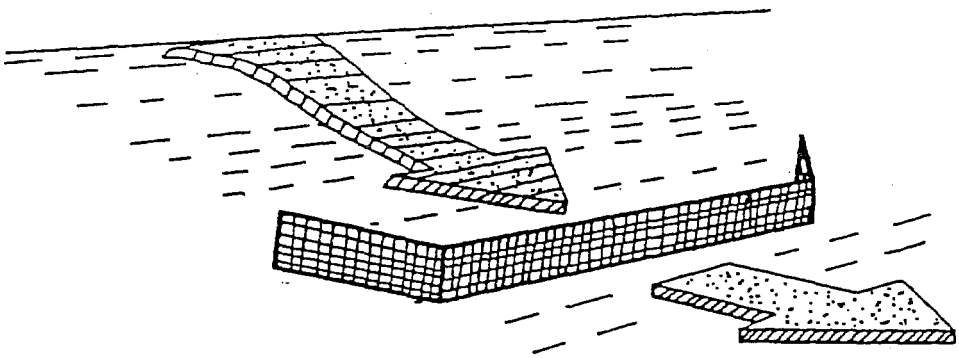

Objectives

- *Housekeeping Practices*
- *Contain Waste*
- *Minimize Disturbed Areas*
- *Stabilize Disturbed Areas*
- *Protect Slopes/Channels*
- *Control Site Perimeter*
- *Control Internal Erosion*

GENERAL DESCRIPTION

A silt fence is made of a filter fabric which has been entrenched, attached to supporting poles, and sometimes backed by a wire fence for support. The silt fence detains sediment-laden water, promoting sedimentation behind the fence.

SUITABLE APPLICATIONS

- Along the perimeter of the site.
- Below the toe of a cleared slope.
- Along streams and channels.
- Around temporary spoil areas.
- Across swales with catchments less than 1 acre.
- Below other small cleared areas.

INSTALLATION/APPLICATION

- Use principally in areas where sheet flow occurs.
- Install along a level contour, so water does not pond more than 1.5 feet at any point.
- No more than 1 acre, 100 ft., or 0.5 cfs of concentrated flow should drain to any point along the silt fence.
- Turn ends of fence uphill.
- Provide area behind the fence for runoff to pond and sediment to settle (approx. 1200 sq. ft. per acre draining to the silt fence).
- Select filter fabric which retains 85% of the soil, by weight, based on sieve analysis, but is not finer than an equivalent opening size of 70.

REQUIREMENTS

- Maintenance
  - Inspect weekly and after each rainfall.
  - Repair wherever fence is damaged.
  - Remove sediment when it reaches 1/3 the height of the fence.
- Cost (source: EPA, 1992)
  - Average annual cost for installation and maintenance (assumes 6 month useful life): $7 per lineal foot ($850 per drainage acre)

LIMITATIONS

- Do not use where 85% of the soil, by weight, passes through a No. 200 sieve because the filter fabric will clog.
- Do not place fence on a slope, or across any contour line.
- Do not use in streams, channels, or anywhere flow has concentrated.
- Do not use in locations where ponded water may cause flooding.

Targeted Pollutants

- ● *Sediment*
- ○ *Nutrients*
- ○ *Toxic Materials*
- ○ *Oil & Grease*
- ○ *Floatable Materials*
- ○ *Other Construction Waste*

- ● *Likely to Have Significant Impact*
- ○ *Probable Low or Unknown Impact*

Implementation Requirements

- ◒ *Capital Costs*
- ◒ *O&M Costs*
- ◒ *Maintenance*
- ○ *Training*
- ○ *Suitability for Slopes >5%*

● *High* ○ *Low*

ESC50

Best Management Practices

Additional Information — Silt Fence

A silt fence is a temporary sediment barrier consisting of filter fabric stretched across and attached to supporting posts, entrenched, and, depending upon the strength of the fabric used, supported with wire fence. Silt fences trap sediment in two ways: (1) by intercepting and detaining small amounts of sediment from disturbed areas during construction operations in order to promote sedimentation behind the fence; and (2) by decreasing the velocity of low flows (up to 0.5 cfs) in swales.

Silt fences may be used for perimeter control, placed upstream of the point(s) of discharge of sheet flow from a site. They may also be used as interior controls below disturbed areas where runoff may occur in the form of sheet and rill erosion, and perpendicular to minor swales or ditch lines for up to one acre contributing drainage areas. Silt fences are generally ineffective in locations where the flow is concentrated and are only applicable for sheet or overland flows.

Installation/Application

Planning:

Silt fences are generally most effective when the following placement criteria are followed:

- Limit the upstream drainage area to 1 acre or less when used alone or in combination with sediment basin in a larger site.
- The maximum slope perpendicular to the fence line should be 1:1.
- Limit the maximum sheet or overland flow path length to any point along the fence to 100 feet.
- Limit the concentrated flows reaching the fence to 0.5 cfs.

Silt fences are preferable to straw barriers in many cases. Laboratory work at the Virginia Highway and Transportation Research Council has shown that silt fences can trap a much higher percentage of suspended sediments than can straw bales. While the failure rate of silt fences is lower than that of straw barriers, there are many instances where silt fences have been improperly installed. The following installation methods can improve performance and should be followed:

- Construct the silt fence along a level contour.
- Silt fences should remain in place until the disturbed area is permanently stabilized.
- Provide sufficient room for runoff to pond behind the fence and to allow sediment removal equipment to pass between the silt fence and toes of slopes or other obstructions. About 1200 sq. ft. of ponding area should be provided for every acre draining to the fence.
- Turn the ends of the filter fence uphill to prevent storm water from flowing around the fence.
- Leave an undisturbed or stabilized area immediately downslope from the fence.
- Do not place in live streams or intermittently flowing channels.

Design:

Selection of a filter fabric is based on soil conditions at the construction site (which affect the equivalent opening size (EOS) fabric specification) and characteristics of the support fence (which affect the choice of tensile strength). The designer should specify a filter fabric that retains the soil found on the construction site yet will have openings large enough to permit drainage and prevent clogging. The following criteria is recommended for selection of the equivalent opening size:

1. If 50 percent or less of the soil, by weight, will pass the U.S. standard sieve No. 200, select the EOS to retain 85 percent of the soil. The EOS should not be finer than EOS 70.
2. For all other soil types, the EOS should be no larger than the openings in the U.S. Standard Sieve No. 70 [0.0083 in. (0.21 mm.)] except where direct discharge to a stream, lake, or wetland will occur, then the EOS should be no larger than Standard Sieve No. 100.

ESC50

Best Management Practices

Additional Information — Silt Fence

To reduce the chance of clogging, it is preferable to specify a fabric with openings as large as allowed by the criteria. No fabric should be specified with an EOS smaller than U.S. Standard Sieve No. 100 [0.0059 in. (0.15 mm.)]. If 85 percent or more of a soil, by weight, passes through the openings in a No. 200 sieve [0.0029 in. (0.074 mm.)], filter fabric should not be used. Most of the particles in such a soil would not be retained if the EOS was too large, and they would clog the fabric quickly if the EOS was small enough to capture the soil.

The fence should be supported by a wire mesh if the fabric selected does not have sufficient strength and bursting strength characteristics for the planned application (as recommended by the fabric manufacturer). Filter fabric material should contain ultraviolet ray inhibitors and stabilizers to provide a minimum of six months of expected usable construction life at a temperature range of 0° F. to 120° F.

Installation Guidelines:
Filter fences are to be constructed on a level contour. Sufficient area should exist behind the fence for ponding to occur without flooding or overtopping the fence.

- Posts should be spaced a maximum of 6 feet apart and driven securely into the ground a minimum of 30 inches.
- A trench should be excavated approximately 8 inches wide and 12 inches deep along the line of posts and upslope from the barrier.
- When standard strength filter fabric is used, a wire mesh support fence should be fastened securely to the upslope side of the posts using heavy-duty wire staples at least 1 inch long, tie wires or hog rings. The wire should extend into the trench a minimum of 4 inches.
- The standard strength filter fabric should be stapled or wired to the fence, and 40 inches of the fabric should extend into the trench. When extra-strength filter fabric and closer post spacing are used, the wire mesh support fence may be eliminated and the filter fabric stapled or wired directly to the posts.
- Avoid the use of joints. The filter fabric should be purchased in a continuous roll, then cut to the length of the barrier. When joints are necessary, filter cloth should be spliced together only at a support post, with a minimum 6 inch overlap, and both ends securely fastened to the post.
- The trench should be backfilled with compacted native material.

Requirements
Maintenance:

Inspect monthly during dry periods and immediately after each rainfall. Repair as necessary. Sediment must be removed when it reaches approximately one third the height of the fence, especially if heavy rains are expected.

Filter fences should not be removed until the upslope area has been permanently stabilized.

Limitations
- Filter fences will create a temporary sedimentation pond on the upstream side of the fence and may cause temporary flooding. Fences not constructed on a level contour will be overtopped by concentrated flow resulting in failure of the filter fence.
- Filter fences are not practical where large flows of water are involved, hence the need to restrict their use to drainage areas of one acre or less, and flow rates of less than 0.5 cfs.
- Problems may arise from incorrect selection of pore size and/or improper installation.
- Do not allow water depth to exceed 1.5 ft. at any point.
- Improperly installed fences are subject to failure from undercutting, overlapping, or collapsing.

ESC50

Best Management Practices

Additional Information — Silt Fence

REFERENCES

Best Management Practices and Erosion Control Manual for Construction Sites, Flood Control District of Maricopa County, Arizona, September1992.

Environmental Action Manual, City of Austin, Texas, 1989.

Manual of Standards of Erosion and Sediment Control Measures, Association of Bay Area Governments, Jun 1981.

Proposed Guidance Specifying Management Measures for Sources of Nonpoint Pollution in Coastal Waters, Work Group Working Paper, USEPA, April, 1992.

Sedimentation and Erosion Control Practices, An Introductory of Current Practices (Draft), USEPA, 1990.

Stormwater Management Manual for The Puget Sound Basin, Washington State Department of Ecology, Public Review Draft, 1991.

Water Quality Management Plan for the Lake Tahoe Region, Volume II, Handbook of Management Practices, Tahoe Regional Planning Agency - November 1988.

ESC50

Best Management Practices

Additional Information — Silt Fence

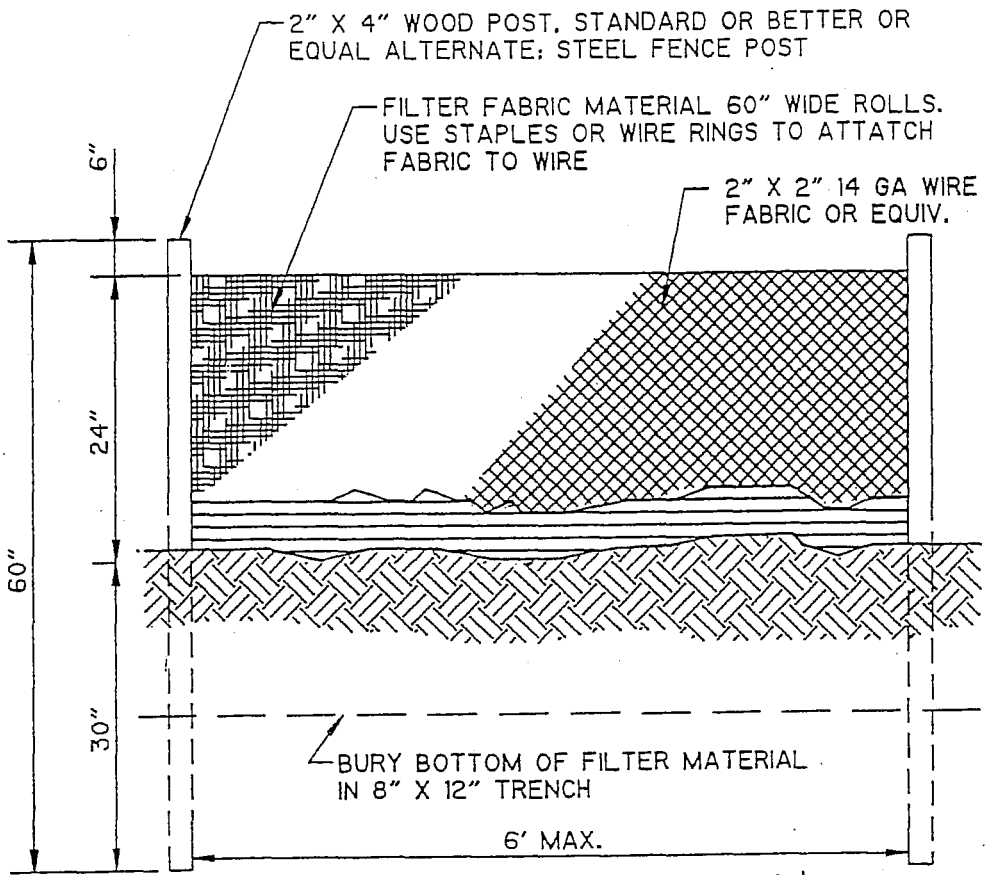

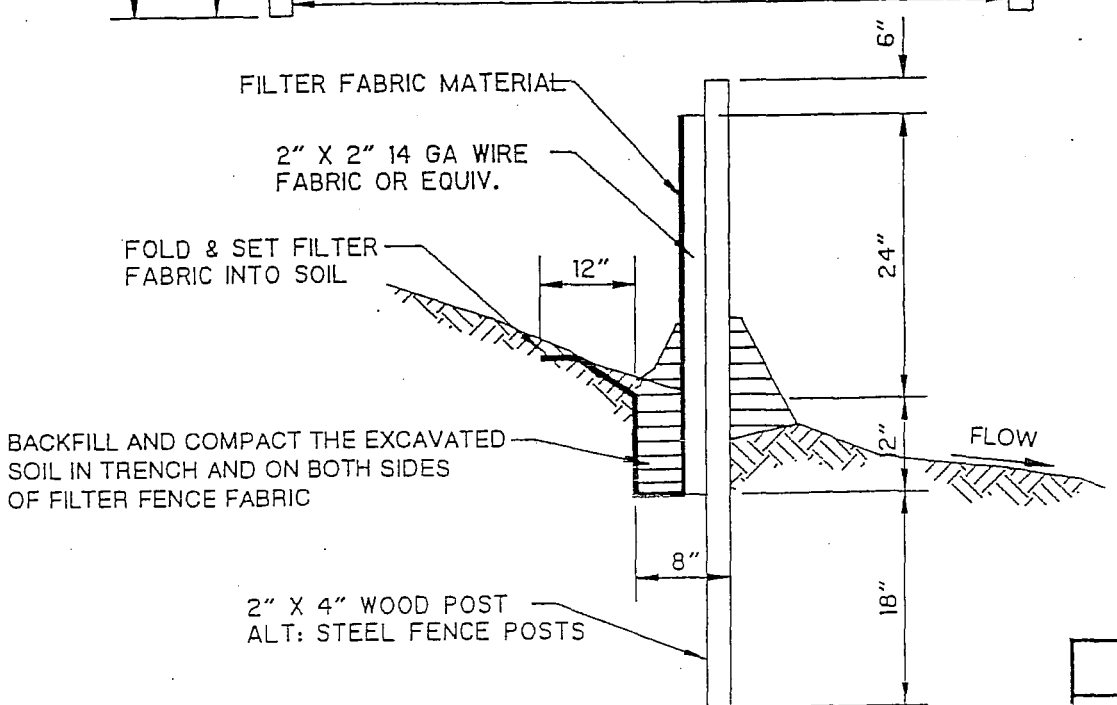

SILT FENCE

ESC50

Best Management Practices

BMP: STRAW BALE BARRIERS

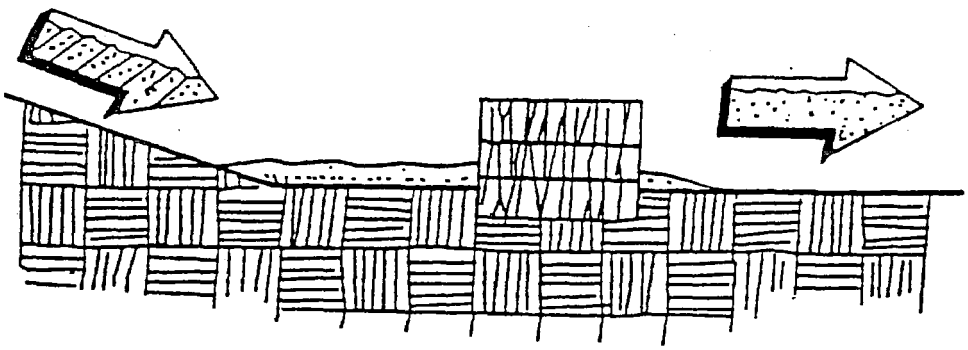

Objectives

- Housekeeping Practices
- Contain Waste
- Minimize Disturbed Areas
- Stabilize Disturbed Areas
- Protect Slopes/Channels
- (Control Site Perimeter)
- (Control Internal Erosion)

GENERAL DEFINITION

A straw bale barrier consists of straw bales placed end to end along a level contour in a shallow trench and staked to hold them in place. The barrier detains runoff, creating a pond behind the barrier where sedimentation occurs.

SUITABLE APPLICATIONS

- Along the perimeter of the site.
- Along streams and channels.
- Across swales with small catchments.
- Around temporary spoil areas.
- Below other small, cleared areas.

INSTALLATION/APPLICATION CRITERIA

- Use primarily in areas where sheet or rill flow occurs.
- No more than 1/4 acre per 100 feet of barrier should drain to the barrier.
- Install along a level contour.
- Place in a 4-inch deep trench.
- Backfill and compact the excavated soil on the upstream face of the barrier.
- Secure each bale with two stakes.
- Leave enough area (about 1200 sq. ft. per acre) behind the barrier for runoff to pond (no more than 1.5 ft. depth) and sediment to settle.

REQUIREMENTS

- Maintenance
  - Inspect weekly and after each rain.
  - Replace bales which have decomposed or whose bindings have broken.
  - Remove sediment behind the barrier when it reaches a depth of 6 inches.
- Costs (source: EPA, 1992)
  - Average annual cost for installation and maintenance (assumes 3 month useful life): $17 per lineal foot ($6,800 per drainage acre).

LIMITATIONS

- Straw bale barriers are not to be used for extended periods of time because they tend to rot and fall apart.
- Suitable only for sheet flow on slopes of 2% or flatter.
- Not appropriate for large drainage areas, limit to one acre or less.
- Straw bales lose their effectiveness rapidly due to rotting, thus constant maintenance is required.
- Not recommended for concentrated flow, inlet protection, channel flow, and live streams.
- Bale bindings of jute or cotton not recommended.

Targeted Pollutants

- ● Sediment
- ○ Nutrients
- ○ Toxic Materials
- ○ Oil & Grease
- ○ Floatable Materials
- ○ Other Construction Waste

● Likely to Have Significant Impact
○ Probable Low or Unknown Impact

Implementation Requirements

- ● Capital Costs
- ● O&M Costs
- ● Maintenance
- ○ Training
- ○ Suitibility for Slopes >5%

● High ○ Low

ESC51

Best Management Practices

- Straw bale barriers have not been as effective as expected due to improper use. These barriers have been placed in streams and drainageways where runoff volumes and velocities have caused the barriers to wash out. In addition, failure to stake and entrench the straw bale has allowed undercutting and end flow.

ESC51

Best Management Practices

Additional Information — Straw Bale Barrier

A straw bale barrier consists of a series of secured anchored bales placed to intercept sediment-laden runoff from small drainage areas of disturbed soil. The barrier ponds runoff and allow sediment to settle. Straw bale dikes should not be used for extended periods of time because they tend to rot and fall apart.

The straw bale barrier is used where there are no concentrations of water in a channel or drainageway, and where erosion would occur from sheet flow. These barriers are typically constructed below disturbed areas subject to sheet flow of runoff.

Installation/Application

Straw bale barriers should be used for drainage areas no more than 1/4 acre per 100 feet of barrier length, with no more than 100 ft upstream of any point along the barrier. The barrier should be placed along a level contour no greater than 2:1. When installed and maintained according to the guidelines on this fact sheet, straw bale dikes remove approximately 67% of the sediment transported in construction site runoff. This optimum efficiency can only be achieved through careful maintenance, with special attention to replacing rotted or broken bales. The barrier should be constructed on a level contour to prevent concentration of flow against a small portion of the barrier.

An effective straw bale barrier should be installed in the following manner:

1. Bales should be placed on the contour and in a row with ends tightly abutting the adjacent bales.
2. Leave area for runoff to pond upstream of the barrier by locating barrier away from the toe of slopes. This also provides access for maintenance.
3. Each bale should be embedded in the soil a minimum of (4) inches and placed so the bindings are horizontal. Bindings placed on soil will soon disintegrate and cause the barrier to fail.
4. Bales should be securely anchored in place by either two stakes or re-bars driven through the bale. The first stake in each bale should be driven toward the previously laid bale at an angle to force the bales together. Stakes should be driven flush with the bale.
5. Backfill and compact the excavated soil along the upstream face of the barrier.
6. Remove the barrier when it has served its usefulness so as not to block or impede storm flow or drainage.

REFERENCES

Best Management Practices and Erosion Control Manual for Construction Sites, Flood Control District of Maricopa County, Arizona, September 1992.

"Draft - Sedimentation and Erosion Control, An Inventory of Current Practices", U.S.E.P.A., April, 1990.

"Environmental Criteria Manual", City of Austin, Texas.

Manual of Standards of Erosion and Sediment Control Measures, Association of Bay Area Governments, Jun 1981.

Proposed Guidance Specifying Management Measures for Sources of Nonpoint Pollution in Coastal Waters, Work Group Working Paper, USEPA, April, 1992.

Stormwater Management Water for the Puget Sound Basin, Washington State Department of Ecology, The Technical Manual - February 1992, Publication # 91-75.

Water Quality for Construction Businesses, City of Bellevue, Washington.

Water Quality Management Plan for the Lake Tahoe Region, Volume II, Handbook of Management Practices, Tahoe Regional Planning Agency - November 1988.

ESC51

Best Management Practices

Additional Information — Straw Bale Barrier

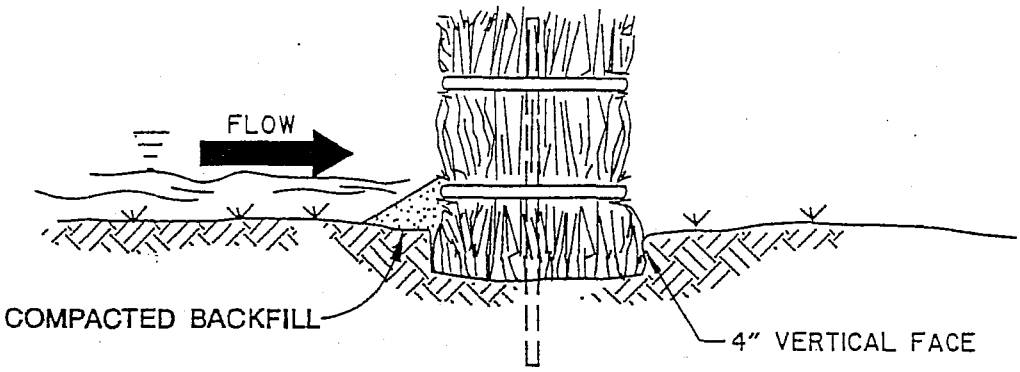

* PROMOTES ON SITE SEDIMENTATION BY CREATING A TEMPORARY POND.

BEDDING DETAIL

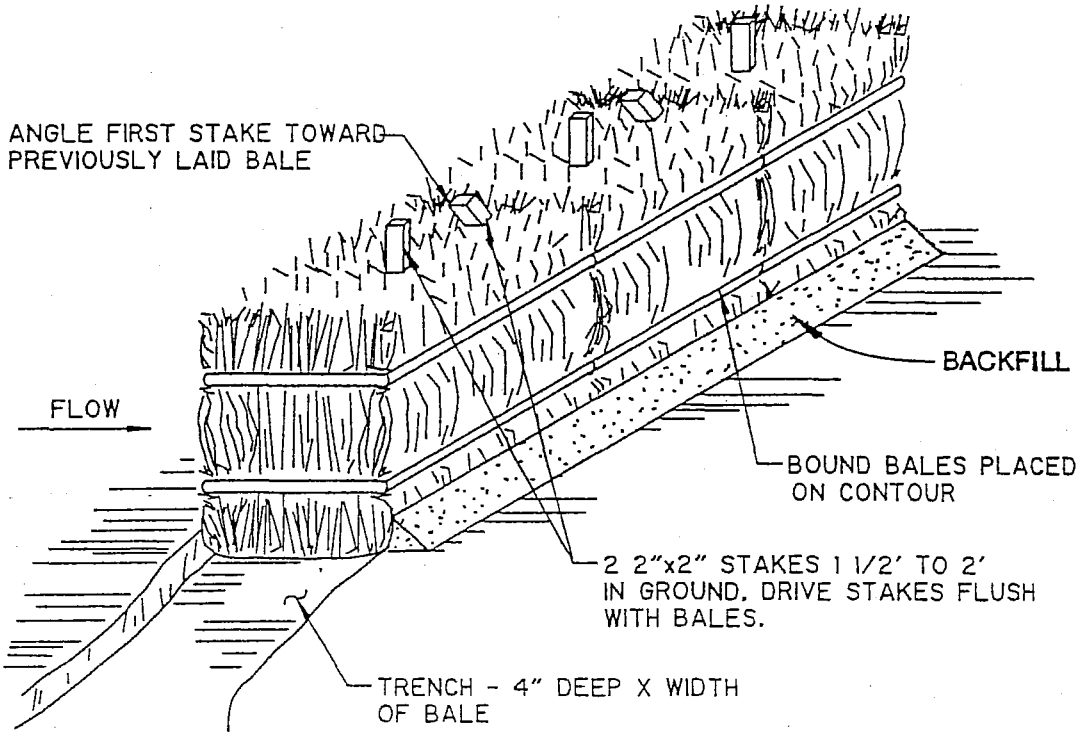

SUBSTITUTION OF STEEL BARS FOR WOODEN STAKES IS NOT RECOMMENDED DUE TO POTENTIAL FOR DAMAGING CONSTRUCTION EQUIPMENT

ANCHORING DETAIL

STRAW BALE BARRIERS

ESC51

Best Management Practices

BMP: SAND BAG BARRIER

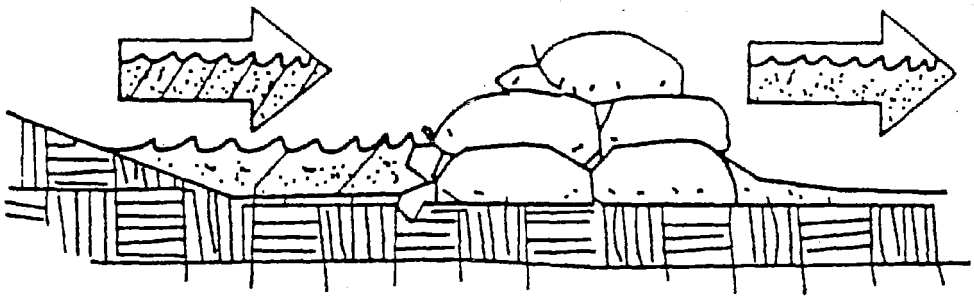

Objectives

- Housekeeping Practices
- Contain Waste
- Minimize Disturbed Areas
- Stabilize Disturbed Areas
- Protect Slopes/Channels
- Control Site Perimeter
- Control Internal Erosion

GENERAL DEFINITION

Stacking sand bags along a level contour creates a barrier which detains sediment-laden water, ponding water upstream of the barrier and promoting sedimentation.

SUITABLE APPLICATIONS

- Along the perimeter of the site.
- Check dams across streams and channels.
- Along streams and channels.
- Barrier for utility trenches in a channel.
- Across swales with small catchments.
- Division dike or berm.
- Below the toe of a cleared slope.
- Create a temporary sediment trap.
- Around temporary spoil areas.
- Below other small cleared areas.

INSTALLATION/APPLICATION CRITERIA

- May be used in drainage areas up to 5 acres.
- Install along a level contour.
- Base of sand bag barrier should be at least 48 inches wide.
- Height of sand bag barrier should be at least 18 inches high.
- 4 inch PVC pipe may be installed between the top layer of sand bags to drain large flood flows.
- Provide area behind barrier for runoff to pond and sediment to settle, size according to sediment trap BMP criteria (ESC55).
- Place below the toe of a slope.
- Use sand bags large enough and sturdy enough to withstand major flooding.

REQUIREMENTS

- Maintenance
  - Inspect after each rain.
  - Reshape or replace damaged sand bags immediately.
  - Remove sediment when it reaches six inches in depth.
- Cost
  - Sand bag barriers are more costly, but typically have a longer useful life than other barriers.

LIMITATIONS

- Sand bags are more expensive than other barriers, but also more durable.
- Burlap should not be used for sand bags.

Targeted Pollutants

- ● Sediment
- ○ Nutrients
- ○ Toxic Materials
- ○ Oil & Grease
- ○ Floatable Materials
- ○ Other Construction Waste

● Likely to Have Significant Impact
○ Probable Low or Unknown Impact

Implementation Requirements

- ● Capital Costs
- ○ O&M Costs
- ○ Maintenance
- ○ Training
- ◒ Suitability for Slopes >5%

● High ○ Low

ESC52

Best Management Practices

Additional Information — Sand Bag Barrier

Suitable Applications

Sand bag berms may be used during construction activities in stream beds and utility construction in channels, temporary channel crossing for construction equipment, etc. Sand bag berms may also be installed parallel to roadway construction. Sand bag berms may also be used to create temporary sediment traps, retention basins and in place of straw bales or silt fences. Examples of applications include:

- Check dams across stream channels.
- Barriers for utility trenches or other construction in a stream channel.
- At temporary channel crossings.
- May be used on a slope where straw bales and silt fences are not appropriate.
- As a diversion dike.
- Embankment for a temporary sediment basin or retention basin.
- Sediment barriers near the toe of slopes.
- At construction perimeter.

Advantages

- Provides a semi-permeable barrier in potentially wet areas.
- More permanent than silt fences or straw bales.
- Allows for easy relocation on site to meet changing needs during construction.

Installation/Application

Sand bag barriers may be used for sediment trapping in locations where silt fences and straw bale barriers are not strong enough. In addition, sand bag barriers are appropriate to use when construction of check dams or sumps in a stream is undesirable. The sand bag berms can provide the same function as a check dam without disturbing the stream or vegetation. The sand bag berm will also allow a small sediment retention area to be created prior to construction of final detention basins. For installation of a sand bag berm, the following criteria should be observed:

- Drainage Area - Up to five (5) acres.
- Height of Berm - 18 inches minimum height, measured from the top of the existing ground at the upslope toe to the top of the barrier.
- Width of Berm - 48 inches minimum width measured at the bottom of the barrier; 18 inches at the top.
- Sand bag Size - Length 24 to 30 inches, width 16 to 18 inches and thickness six (6) to eight (8) inches. Weight 90 to 125 pounds.
- Sand bag Material - Polypropylene, polyethylene or polyamide woven fabric, minimum unit weight four (4) ounces per square yard, mullen burst strength exceeding 300 psi and ultraviolet stability exceeding 70 percent. Use of burlap is discouraged since it rots and deteriorates easily.
- Grade of Sand - Coarse sand, gravel.
- Runoff water should be allowed to flow over the tops of the sand bags or through four (4) inch polyvinyl chloride pipes embedded below the top layer of bags.
- Area behind the sand bag barrier should be established according to sizing criteria for sediment trap BMP (ESC55).

REFERENCES

Best Management Practices and Erosion Control Manual for Construction Sites, Flood Control District of Maricopa County, Arizona, September 1992.

Water Quality Management Plan for the Lake Tahoe Region, Volume II, Handbook of Management Practices, Tahoe Regional Planning Agency - November 1988.

ESC52

Best Management Practices

Additional Information — Sand Bag Barrier

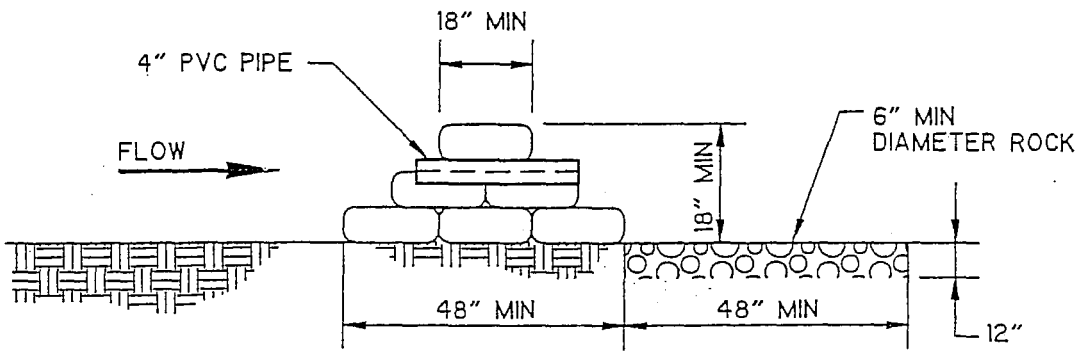

CROSS-SECTION

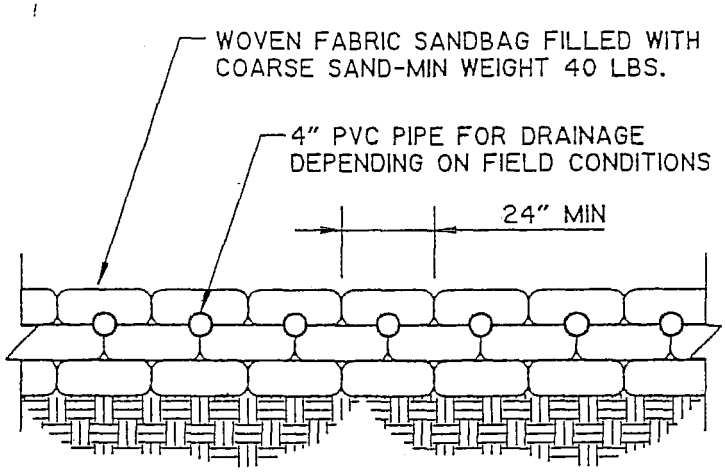

FRONT VIEW

SAND BAG BERM

ESC52

Best Management Practices

BMP: BRUSH OR ROCK FILTER

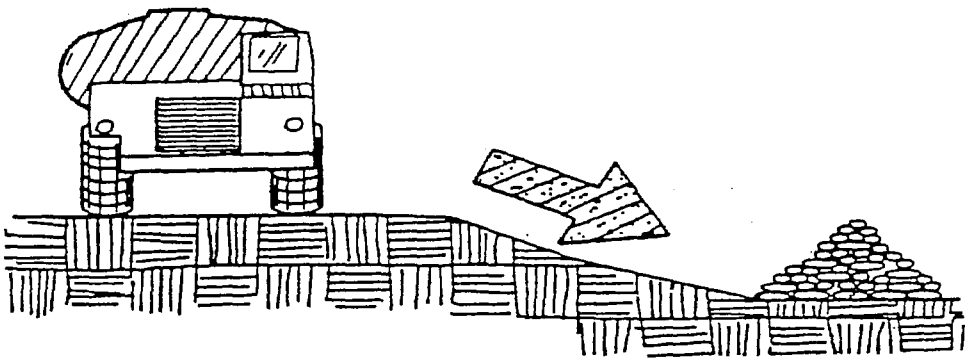

Objectives

- Housekeeping Practices
- Contain Waste
- Minimize Disturbed Areas
- Stabilize Disturbed Areas
- Protect Slopes/Channels
- Control Site Perimeter
- Control Internal Erosion

GENERAL DEFINITION

A rock filter berm is made of rock 3/4 to 3 inches in diameter and placed along a level contour where sheet flow may be detained and ponded, promoting sedimentation. A brush barrier is composed of brush (usually obtained during the site clearing) wrapped in filter cloth and anchored to the toe of the slope. If properly anchored brush or rock filters may be used for sediment trapping and velocity reduction. See Check Dam BMP (ESC41) for more information.

SUITABLE APPLICATIONS

- As check dams across mildly sloped construction roads.
- Below the toe of slopes.
- Along the site perimeter.
- Along streams and channels.
- Around temporary spoil areas.
- Below other small cleared areas.
- At sediment traps at culvert/pipe outlets.

INSTALLATION/APPLICATION CRITERIA

- Use principally in areas where sheet or rill flow occurs.
- For rock filter, use larger rock and place in a staked, woven wire sheathing if placed where concentrated flows occur.
- Install along a level contour.
- Leave area behind berm where runoff can pond and sediment can settle.
- Drainage area should not exceed 5 acres.

REQUIREMENTS

- Maintenance
  - Inspect monthly and after each rainfall.
  - If berm damaged, reshape and replace lost/dislodged rock.
  - Remove sediments when depth reaches 1/3 of berm height, or 1 ft.
- Cost
  - Brush filter: Low to moderate cost if debris from on-site clearing and grubbing is used.
  - Rock filter: Expensive, since off-site materials, hand construction and demolition/removal are usually required.

Targeted Pollutants

- ● Sediment
- ○ Nutrients
- ○ Toxic Materials
- ○ Oil & Grease
- ○ Floatable Materials
- ○ Other Construction Waste

● Likely to Have Significant Impact
○ Probable Low or Unknown Impact

Implementation Requirements

- ◒ Capital Costs
- ◒ O&M Costs
- ○ Maintenance
- ○ Training
- ◒ Suitability for Slopes >5%

● High ○ Low

ESC53

Best Management Practices

LIMITATIONS

- Rock berms may be difficult to remove.
- Removal problems limit their usefulness in landscaped areas.
- Not appropriate for drainage areas greater than 5 acres.
- Runoff will pond upstream of the filter, possibly causing flooding if sufficient space does not exist.

ESC53

Best Management Practices

Additional Information — Brush or Rock Filter

Rock Filter

A rock filter consists of open graded rock installed at the toe of a slope, along the perimeter of a developing or disturbed area, and as a checkdam across construction roads. Their purpose is to intercept sediment laden runoff from disturbed areas of the site, allow the runoff to pond, promote sedimentation behind the filter, and slowly release the water as sheet flow.

Rock filters are appropriate where a temporary measure is needed to prevent sediments from entering right-of-ways of traffic areas such as near the toe of slopes, incorporated into temporary stabilized construction entrances (ESC 26), or at other locations along the construction site perimeter. Rock filters may also be used as check dams across one or more lanes of construction traffic temporary roads, or unsurfaced rights of way subject to construction traffic.

Advantages of the rock filters are that they may be less costly than other temporary barriers, and are relatively efficient at sediment removal.

Installation/Application:

Planning:

- Rock filters should be placed along a level contour to intercept sheet flow.
- Allow ample room for ponding, sedimentation, and access by sediment removal equipment between the berm and the toes of slopes.
- Flow through the filter should occur as sheet flow into an undisturbed or stabilized area.
- Installation in stream beds requires large rock, staking of woven wire sheathing, and daily inspection.

Design & Sizing Criteria:

The following design criteria are commonly used to construct filters:

- In Non-Traffic Areas:
  - Maximum flow-through rate per square foot of filter = 60 gpm
  - Height = 18 inches minimum
  - Top width = 24 inches minimum
  - Side slopes = 2:1 or flatter
  - Woven wire sheathing (poultry netting) is recommended in areas of concentrated flow. The wire should be 1 inch diameter hexagonal mesh, galvanized 20 gauge.
  - Build the filter along on a level contour.
  - Rock: 3/4 to 3 inches open graded for sheet flow, 3 to 5 inches open graded for concentrated flow.

- In Construction Traffic Areas:
  - Height = 12" maximum
  - Provide multiple filters in series, spaced as shown.
    - Every 300 ft on slopes less than 5 percent
    - Every 200 ft on slopes 5 to 10 percent
    - Every 100 ft on slopes greater than 10 percent.

Brush Filter

Brush filters trap and filter sediments in a manner similar to other barriers in this handbook (e.g., silt fence, straw bale barrier, rock filter), but have the advantage of being constructed from brush cleared from the site and usually disposed off-site at a cost.

ESC53

Best Management Practices

Additional Information — Brush or Rock Filter

Steps in Construction of a Brush Filter:

1. Stack the brush at the toe of a slope or along the perimeter of the site just outside the limits of clearing and grabbing. The brush may be stacked up to 15 ft. high and 15 ft. wide.
2. Construct a trench 1 to 3 ft. deep immediately upslope from the brush.
3. Place filter fabric over the brush filter and in the trench, extending 1 to 2 ft. upslope of the trench.
4. Backfill the trench with aggregate or compacted soil. The trench should be deep enough and backfill material sufficient to hold the barrier in place during a storm.

REFERENCES

Best Management Practices and Erosion Control Manual for Construction Sites, Flood Control District of Maricopa County, Arizona, September1992.

Handbook of Steel Drainage & Highway Construction, American Iron and Steel Institute, 1983.

Stormwater Management Water for the Puget Sound Basin, Washington State Department of Ecology, The Technical Manual - February 1992, Publication # 91-75.

Storm Water Pollution Plan Handbook, First Edition, State of California, Department of Transportation Division of New Technology, Materials and Research, October 1992.

ESC53

Best Management Practices

Additional Information — Brush or Rock Filter

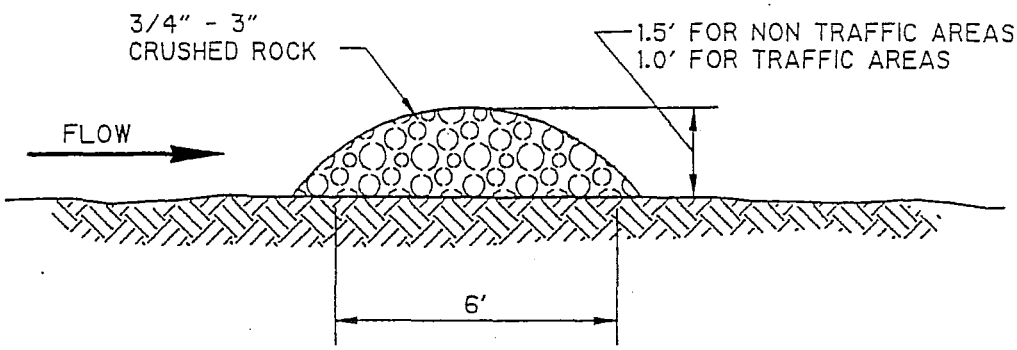

SECTION

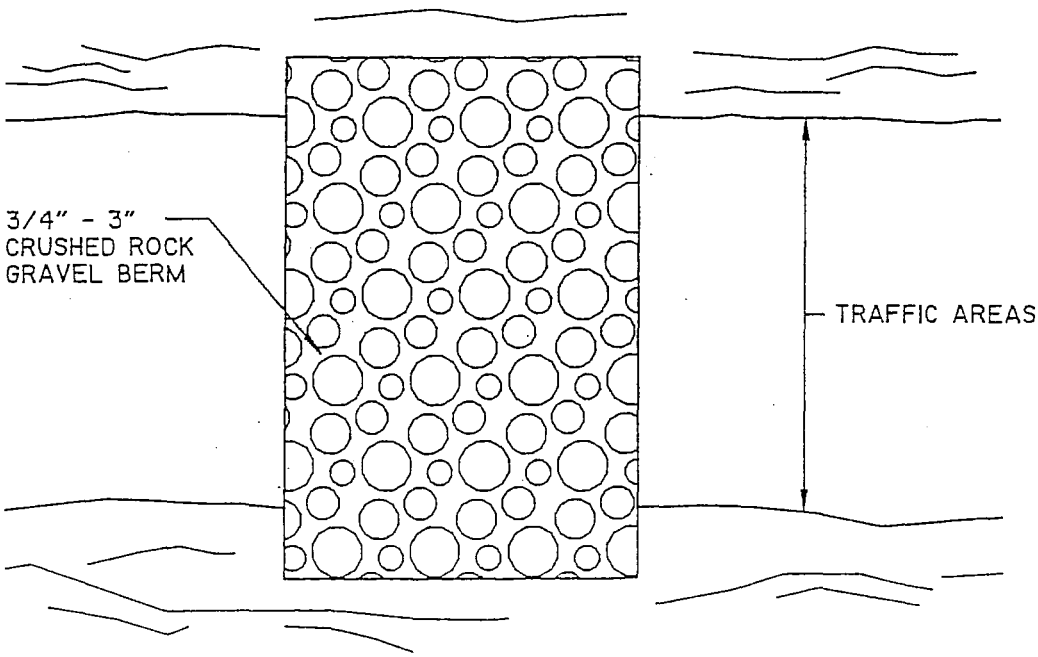

PLAN

GRAVEL FILTER BERM

ESC53

Best Management Practices

BMP: STORM DRAIN INLET PROTECTION

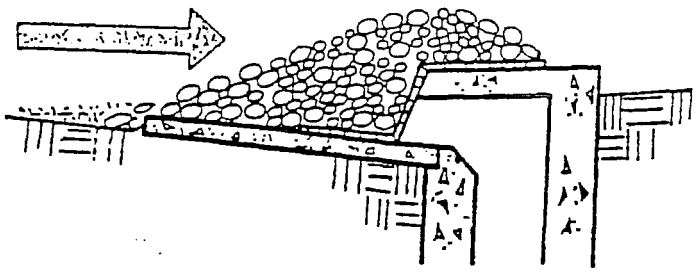

Objectives

- Housekeeping Practices
- Contain Waste
- Minimize Disturbed Areas
- Stabilize Disturbed Areas
- Protect Slopes/Channels
- Control Site Perimeter
- Control Internal Erosion

GENERAL DEFINITION

Devices of various designs which detain sediment-laden runoff and allow the sediment it to settle prior to discharge into a storm drain inlet or catch basin.

SUITABLE APPLICATIONS

- Every storm drain inlet receiving sediment-laden runoff should be protected, either by covering the inlet or promoting sedimentation upstream of the inlet.

INSTALLATION/APPLICATION

- Five types of inlet protection are presented below, however, it is recognized that other effective methods and proprietary device, exist and may be selected:
  - Filter Fabric Fence: Appropriate for drainage basins less than one acre with less than a 5 percent slope.
  - Block and Gravel Filter: Appropriate for flows greater than 0.5 cfs.
  - Gravel and Wire Mesh Filter: Used on curb or drop inlets where construction equipment may drive over the inlet.
  - Sand bag barrier: Used to create a small sediment trap upstream of inlets on sloped, paved streets.
  - Excavated Drop Inlet Sediment Trap: An excavated area around the inlet to trap sediment (see Sediment Trap ESC 55).
- Select the appropriate type of inlet protection and design as referred to or as described in this fact sheet.
- Use only for drainage areas smaller than one acre unless a sediment trap first intercepts the runoff.
- Provide area around the inlet for water to pond without flooding structures and property.

REQUIREMENTS

- Maintenance
  - Inspect weekly and after each rain.
  - Replace clogged filter fabric or stone filters immediately.
  - Remove sediment when depth exceeds half the height of the filter, or half the depth of the sediment trap.
  - Remove as soon as upstream soils are stabilized and streets are swept.
- Cost (source: EPA, 1992)
  - Average annual cost for installation and maintenance (1 year useful life) is $150 per inlet.

Targeted Pollutants

- ● Sediment
- ○ Nutrients
- ○ Toxic Materials
- ○ Oil & Grease
- ◒ Floatable Materials
- ○ Other Construction Waste

● Likely to Have Significant Impact
○ Probable Low or Unknown Impact

Implementation Requirements

- ◒ Capital Costs
- ○ O&M Costs
- ◒ Maintenance
- ○ Training
- ○ Suitability for Slopes >5%

● High ○ Low

ESC54

Best Management Practices

LIMITATIONS

- Drainage area should not exceed 1 acre.
- Runoff will bypass protected inlets on slopes.
- Ponding will occur at a protected inlet, with possible short-term flooding.
- Straw bales are not effective for inlet protection.

ESC54

Best Management Practices

Additional Information — Storm Drain Inlet Protection

Storm drain inlet protection consists of a sediment filter or an impounding area around or upstream of a storm drain, drop inlet, or curb inlet. This erosion and sedimentation control BMP prevents excessive sediment from entering storm drainage systems prior to permanent stabilization of the disturbed area.

All on-site storm drain inlets should be protected. Off-site, inlets should be protected in areas where construction activity tracks sediment onto paved areas or where inlets receive runoff from disturbed areas.

Installation/Aplication Criteria

Planning

Large amounts of sediment may enter the storm drain system when storm drains are installed before the upslope drainage area is stabilized, or where construction is adjacent to an existing storm drain. In cases of extreme sediment loading, the storm drain itself may clog and lose a major portion of its capacity. To avoid these problems, it is necessary to prevent sediment from entering the system at the inlets.

Inlet control measures presented in this handbook should not be used for inlets draining more than one acre. Runoff from larger disturbed areas should be first routed through a Temporary Sediment Trap (see ESC 56). Different types of inlet protection are appropriate for different applications depending on site conditions and the type of inlet. Inlet protection methods not presented in this handbook should be approved by the local storm water management agency.

General Design and sizing criteria:

- Grates and spaces around all inlets should be sealed to prevent seepage of sediment-laden water.
- Excavate sediment sumps (where needed)1 to 2 feet with 2:1 side slopes around the inlet.

Installation procedures for filter fabric fence:

a. Place 2 inch by 2 inch wooden stakes around the perimeter of the inlet a maximum of 3 feet apart and drive them at least 8 inches into the ground. The stakes must be at least 3 feet long.
b. Excavate a trench approximately 8 inches wide and 12 inches deep around the outside perimeter of the stakes.
c. Staple the filter fabric (for materials and specifications, see Silt Fence ESC 50) to wooden stakes so that 32 inches of the fabric extends out and can be formed into the trench. Use heavy-duty wire staples at least one inch in length.
d. Backfill the trench with 3/4 inch or less washed gravel all the way around.

Installation procedure for block and gravel filter:

a. Place hardware cloth or comparable wire mesh with one-half inch openings over the drop inlet so that the wire extends a minimum of 1 foot beyond each side of the inlet structure. If more than one strip is necessary, overlap the strips. Place filter fabric over the wire mesh.
b. Place concrete blocks lengthwise on their sides in a single row around the perimeter of the inlet, so that the open ends face outward, not upward. The ends of adjacent blocks should abut. The height of the barrier can be varied, depending on design needs, by stacking combinations of blocks that are 4 inches, 8 inches, and 12 inches wide. The row of blocks should be at least 12 inches but no greater than 24 inches high.
c. Place wire mesh over the outside vertical face (open end) of the concrete blocks to prevent stone from being washed through the blocks. Use hardware cloth or comparable wire mesh with one half inch openings.
d. Pile washed stone against the wire mesh to the top of the blocks. Use 3/4 to 3 inch gravel.

Installation procedure for gravel and wire mesh filters:

a. Place wire mesh over the drop inlet so that the wire extends a minimum of 1 foot beyond each side of the inlet structure. Use hardware cloth or comparable wire mesh with one-half inch openings. If more than one strip of mesh is necessary, overlap the strips. Place filter fabric over wire mesh.

ESC54

Best Management Practices

b. Place 3/4 to 3 inch gravel over the filter fabric/wire mesh. The depth of the gravel should be at least 12 inches over the entire inlet opening (see attached figure).

Installation procedure for sand bag barrier:

a. Use sand bag made of geotextile fabric (not burlap), and fill with 3/4 in. rock or 1/4 in. pea gravel.
b. Construct on gently sloping street.
c. Leave room upstream of barrier for water to pond and sediment to settle.
d. Place several layers of sand bags--overlapping the bags and packing them tightly together.
e. Leave gap of one bag on the top row to serve as a spillway. Flow from a severe storm (e.g., 10-year storm) should not overtop the curb.

Maintenance Requirements

- For filter fabric fences: Inspections should be made on a regular basis, especially after large storm events. If the fabric becomes clogged, it should be replaced. Sediment should be removed when it reaches approximately one-half the height of the fence. If a sump is used, sediment should be removed when it fills approximately one-half the depth of the hole.
- For gravel filters: If the gravel becomes clogged with sediment, it must be carefully removed from the inlet, and either cleaned or replaced. Since cleaning gravel at a construction site may be difficult, use the sediment-laden stone instead as fill and put fresh stone around the inlet.
- The inlet protection should be removed 30 days after the upslope area has been fully stabilized. Any sediment around the inlet must be carefully removed and disposed.

REFERENCES

Best Management Practices and Erosion Control Manual for Construction Sites, Flood Control District of Maricopa County, Arizona, September 1992.

"Draft - Sedimentation and Erosion Control, An Inventory of Current Practices", U.S.E.P.A., April, 1990.

Erosion and Sediment Control Handbook, S.J. Goldman, K. Jackson, T.A. Bursetynsky, P.E., McGraw Hill Book Company.

Manual of Standards of Erosion and Sediment Control Measures, Association of Bay Area Governments, June 1981.

Proposed Guidance Specifying Management Measures for Sources of Nonpoint Pollution in Coastal Waters, Work Group Working Paper, USEPA, April, 1992.

Stormwater Management Water for the Puget Sound Basin, Washington State Department of Ecology, The Technical Manual - February 1992, Publication # 91-75.

Storm Water Pollution Prevention Handbook, First Edition, State of California, Department of Transportation Division of New Technology, Materials, and Research, October 1992.

ESC54

Best Management Practices

Additional Information — Storm Drain Inlet Protection

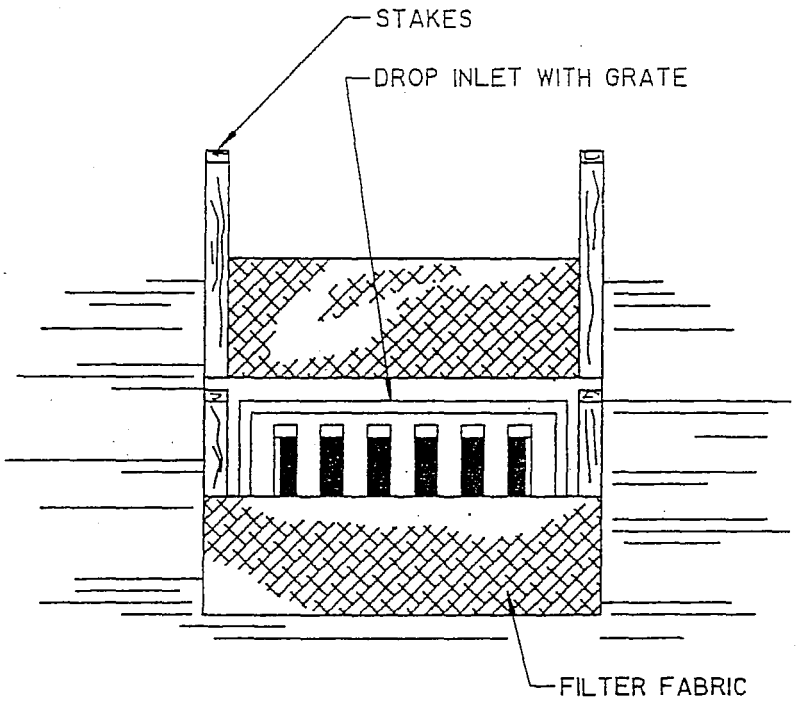

ELEVATION

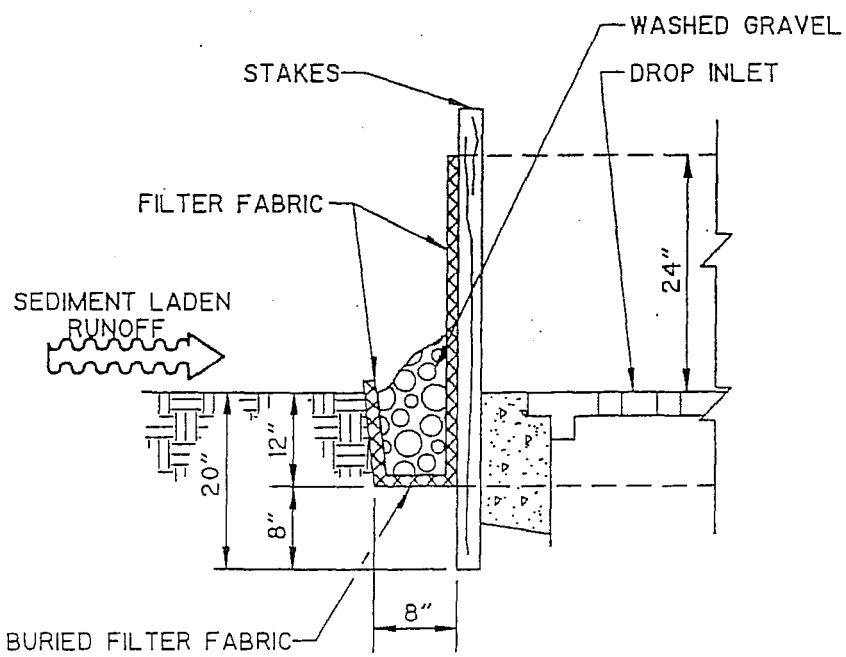

PROFILE

FILTER FABRIC FENCE DROP INLET FILTER

ESC54

Additional Information — Storm Drain Inlet Protection

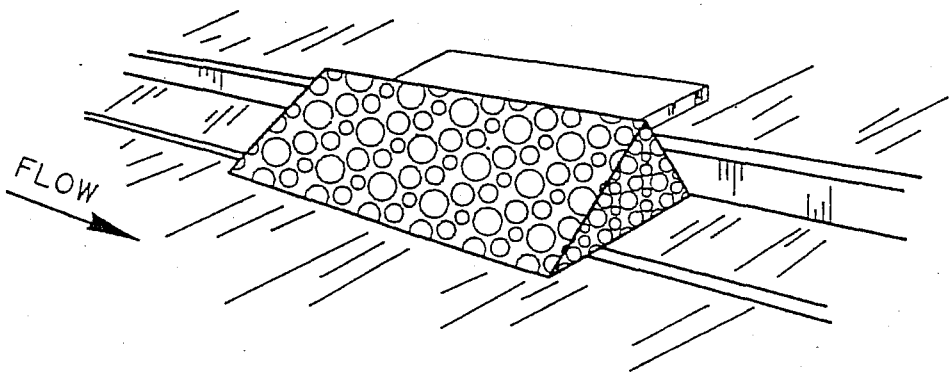

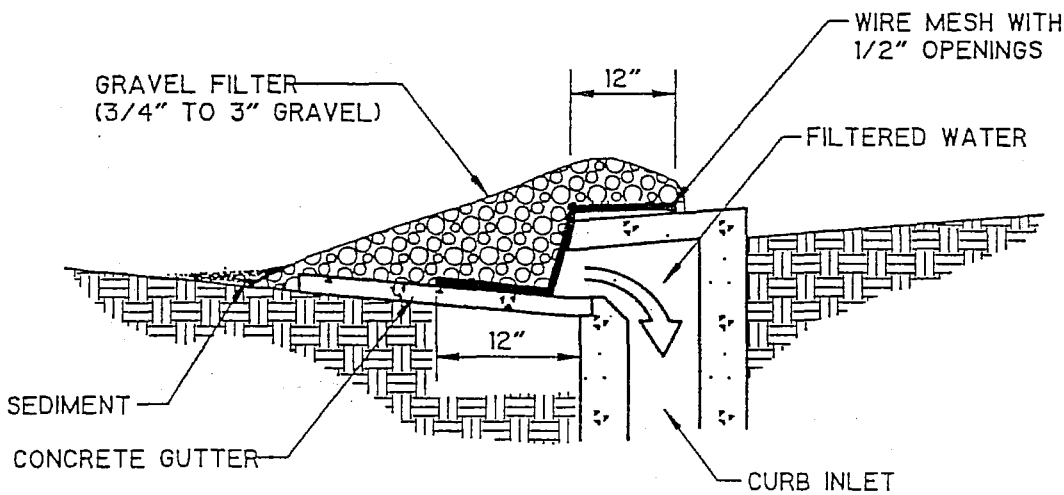

GRAVEL AND WIRE MESH FILTER FOR CURB INLET

ESC54

Additional Information — Storm Drain Inlet Protection

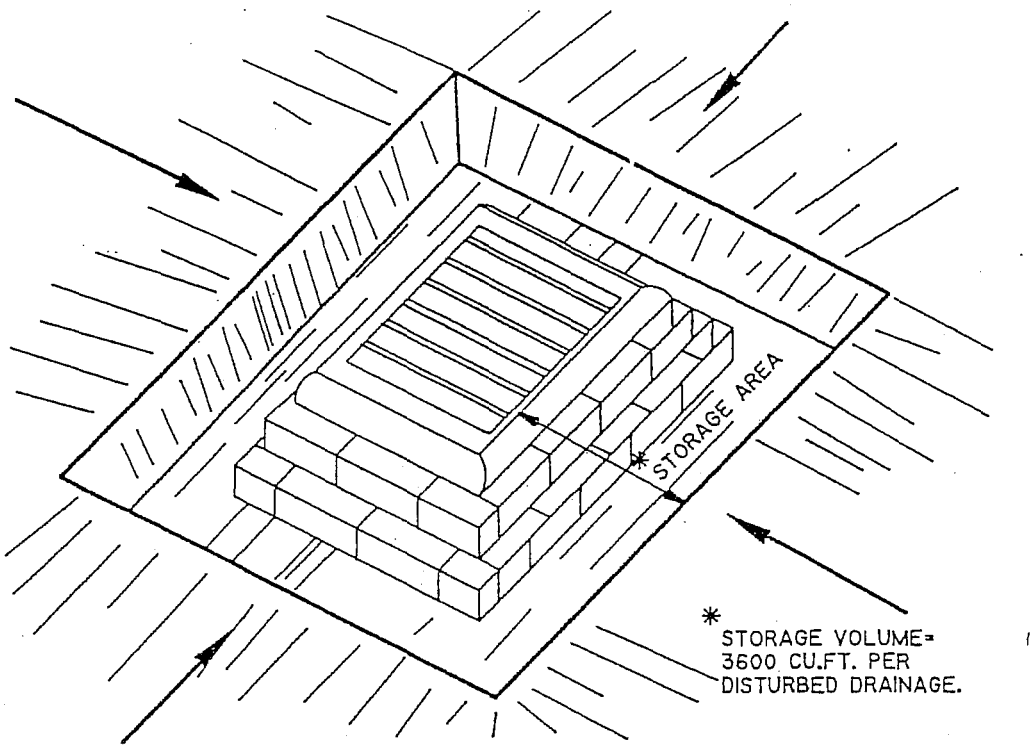

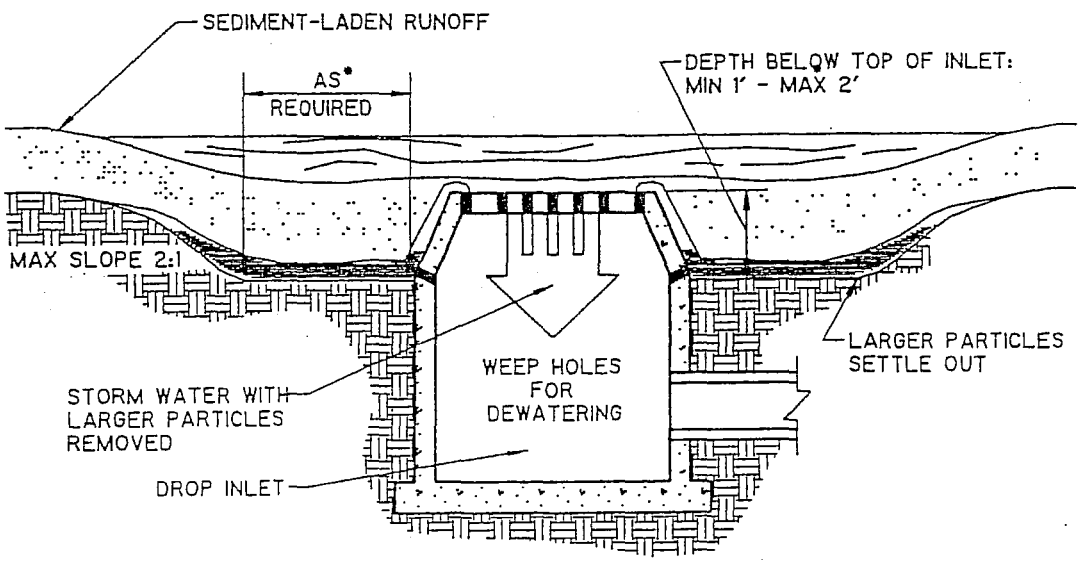

SPECIFIC APPLICATION

THIS METHOD OF INLET PROTECTION IS APPLICABLE WHERE HEAVY FLOWS ARE EXPECTED AND WHERE AN OVERFLOW CAPABILITY AND EASE OF MAINTENANCE ARE DESIRABLE.

ESC5

EXCAVATED DROP INLET SEDIMENT TRAP

Additional Information — Storm Drain Inlet Protection

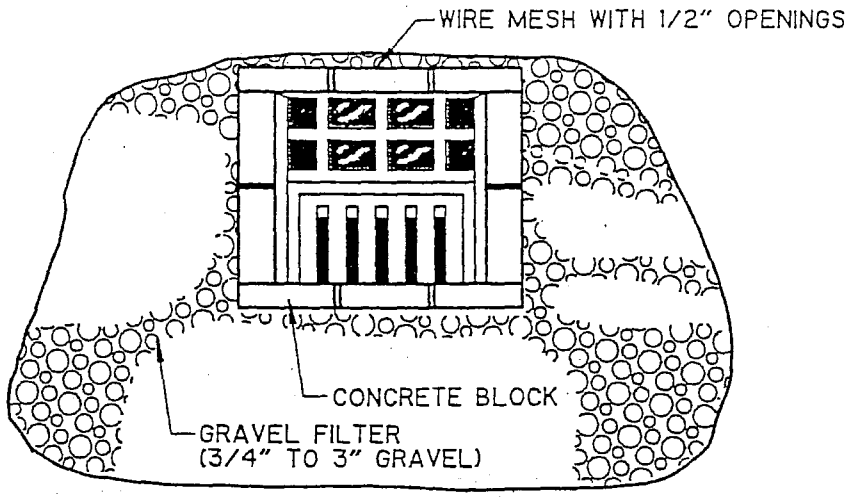

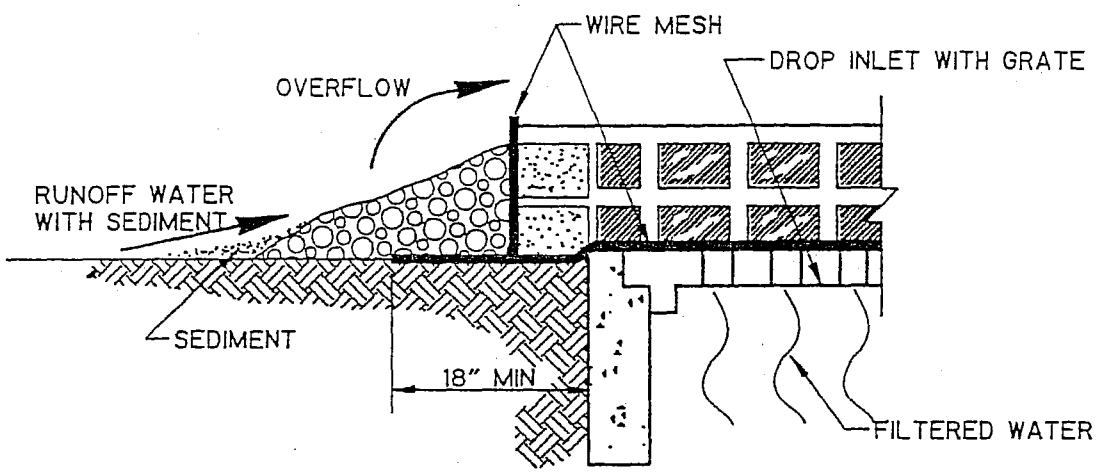

BLOCK AND GRAVEL FILTER AT DROP INLET

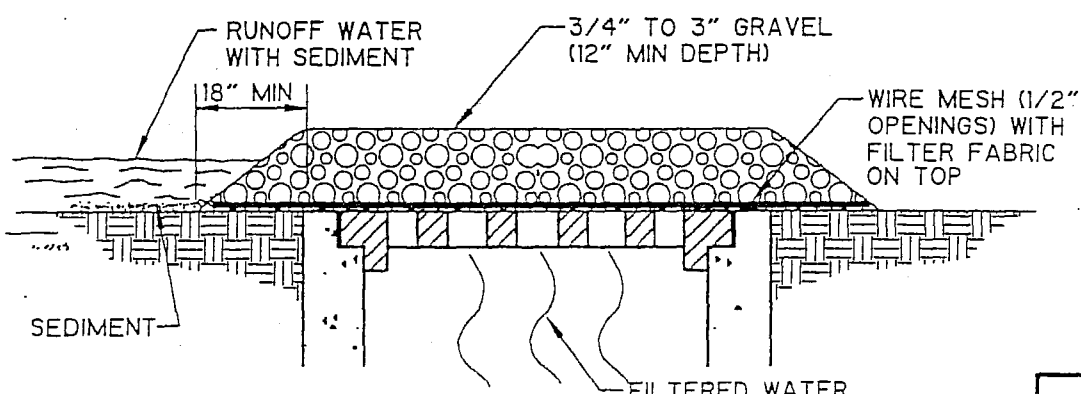

GRAVEL AND WIRE MESH FILTER FOR DROP INLET

ESC54

BMP: SEDIMENT TRAP

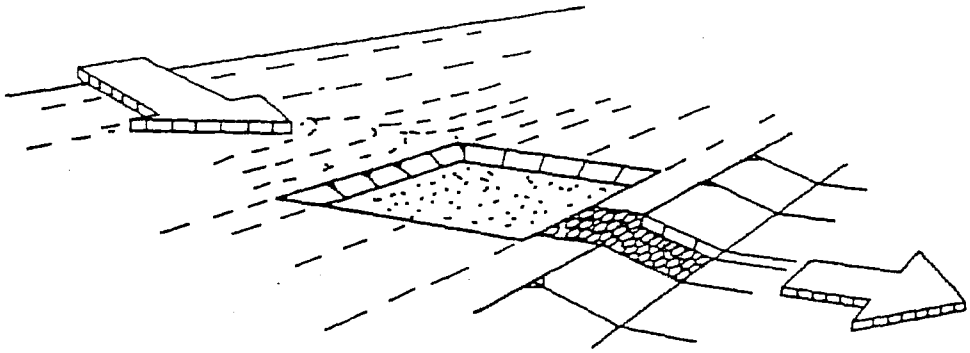

Objectives

- *Housekeeping Practices*
- *Contain Waste*
- *Minimize Disturbed Areas*
- *Stabalize Disturbed Areas*
- *Protect Slopes/Channels*
- *Control Site Perimeter*
- *Control Internal Erosion*

GENERAL DEFINITION

A sediment trap is a small, excavated or bermed area where runoff from small drainage areas is detained and sediment can settle.

SUITABLE APPLICATIONS

- Any disturbed area less than 5 acres. (Sediment Basins, ESC56, must be used for drainage areas greater than 5 acres).
- Along the perimeter of the site at locations where sediment-laden runoff is discharged off-site.
- Around and/or upslope from storm drain inlet protection measures.
- At any point within the site where sediment-laden runoff can enter stabilized or natural areas or waterways.

INSTALLATION/APPLICATION CRITERIA

- Build outside the area to be graded before clearing, grubbing, and grading begin.
- Locate where the trap can be easily cleared of sediment.
- Trap size depends on the type of soil, size of the drainage area, and desired sediment removal efficiency.
- The larger the trap, the less frequently sediment must be removed.
- The outlet of the trap must be stabilized with rock, vegetation, or another suitable material.
- A stable emergency spillway must be installed to safely convey major floods (see your local flood control agency).

REQUIREMENTS

- Maintenance
  - Remove sediment when the sediment storage zone is no more than 1 ft. from being full.
  - Inspect weekly and after each rain.
- Cost (source: EPA, 1992)
  - Average annual cost per installation and maintenance (18 month useful life) is \$0.70 per $ft.^3$ (\$1,300 per drainage acre).

LIMITATIONS

- Only use for drainage areas up to 5 acres (see Sedimentation Basin BMP ST8 for larger areas).
- Only removes coarse sediment (medium silt size and larger) unless sized like a sedimentation basin.

Targeted Pollutants

- ● *Sediment*
- ○ *Nutrients*
- ◒ *Toxic Materials*
- ○ *Oil & Grease*
- ○ *Floatable Materials*
- ○ *Other Construction Waste*

● *Likely to Have Significant Impact*
○ *Probable Low or Unknown Impact*

Implementation Requirements

- ○ *Capital Costs*
- ◒ *O&M Costs*
- ○ *Maintenance*
- ○ *Training*
- ○ *Suitability for Slopes >5%*

● *High* ○ *Low*

ESC 55

Best Management Practices

Additional Information — Sediment Trap

A sediment trap is a small temporary ponding area, usually with a gravel outlet, formed by excavation and/or by constructing an earthen embankment. Its purpose is to collect and store sediment from sites cleared and/or graded during construction. It is intended for use on small drainage areas, with no unusual drainage features, and projected for a quick build-out time. It should help in removing coarse sediment from runoff. The trap is a temporary measure with a design life of approximately 6 months, and is to be maintained until the site area is permanently protected against erosion by vegetation and/or structures.

Application Criteria

Planning:

Sediment traps should be used only for small drainage areas. If the contributing drainage area is greater than 5 acres, refer to Sediment Basins (ST8), or subdivide the catchment area into smaller drainage basins.

Sediment usually must be removed from the trap after each rainfall event. The SWPPP should detail how this sediment is to be disposed of, such as for in fill areas on-site, or removal to an approved off-site dump. Sediment traps used as a perimeter control should be installed before any land disturbance takes place in the drainage area.

Sediment traps are usually small enough that a failure of the structure would not result in a loss of life, damage to home or buildings, or interruption in the use of public roads or utilities. Also, sediment traps are attractive to children and can be dangerous. The following recommendations should be implemented to reduce risks.

1. Install continuous fencing around the sediment trap or pond. Consult local ordinances regarding requirements for maintaining health and safety.
2. Restrict basin side slopes to 3:1 or flatter.

Design:

Sediment trap size depends on the type of soil, size of the drainage area, and desired sediment removal efficiency (see Sedimentation Basin ESC56). As a rule of thumb, the larger the basin volume the greater the sediment removal efficiency. Sizing criteria are typically established under the local grading ordinance or equivalent. The runoff volume from a two-year, 24-hour storm is a common design criteria for sedimentation trap. The sizing criteria below assume that this runoff volume is 0.042 ac-ft/ac (0.5 inches of runoff). While the climatic, topographic, and soil type extremes make it difficult to establish a statewide standard, the following criteria should trap moderate to high amounts of sediment in most areas of California.

- Trap settling volume at least 67 cu. yd. per acre.
- Trap sediment storage volume at least 33 cu. yd. per acre (note: the larger this volume, the less frequently the trap must be cleaned out).
- Trap length greater than twice the basin width.
- Flood volume large enough to contain a major flood without upstream damage and overtopping the embankment.

Installation

Sediment traps can be constructed by excavating a depression in the ground or creating an impoundment with a barrier or low-head dam. Sediment traps should be installed outside the area being graded and should be built prior to the start of the grading activities or removal of vegetation. To minimize the area disturbed by them, sediment traps should be installed in natural depressions or in small swales or drainageways. The following steps must be followed during installation.

1. The area under the embankment must be cleared, grubbed, and stripped of any vegetation and root mat. The pool area should be cleared.
2. The fill material for the embankment must be free of roots or other woody vegetation as well as oversized stones, rocks, organic material, or other objectionable material. The embankment may be compacted by traversing with equipment while it is being constructed.

ESC55

Best Management Practices

3. The trap is removed and the area stabilized when the upslope drainage area has been properly stabilized.
4. All cut-and-fill slopes should be 3:1 or flatter.
5. When a riser is used, all pipe joints must be watertight.
6. When a riser is used, at least the top two-thirds of the riser shall be perforated with 1/2-inch diameter holes spaced 8 inches vertically and 10 to 12 inches horizontally. (See Sediment Basin, ESC56)
7. When an earth or stone outlet is used, the outlet crest elevation should be at least 1 foot below the top of the embankment.
8. When a crushed stone outlet is used, the crushed stone used in the outlet should meet AASHTO M43, size No. 2 or 24, or its equivalent such as MSHA No. 2. Gravel meeting the above gradation may be used if crushed stone is not available.

REFERENCES

Best Management Practices and Erosion Control Manual for Construction Sites, Flood Control District of Maricopa County, Rough Draft - July 1992.

"Draft - Sedimentation and Erosion Control, An Inventory of Current Practices", U.S.E.P.A., April, 1990.

"Environmental Criteria Manual", City of Austin, Texas.

Manual of Standards of Erosion and Sediment Control Measures, Association of Bay Area Governments, June 1981.

Proposed Guidance Specifying Management Measures for Sources of Nonpoint Pollution in Coastal Waters, Work Group Working Paper, USEPA, April, 1992.

Stormwater Management Water for the Puget Sound Basin, Washington State Department of Ecology, The Technical Manual - February 1992, Publication # 91-75.

Water Quality Management Plan for the Lake Tahoe Region, Volume II, Handbook of Management Practices, Tahoe Regional Planning Agency - November 1988.

ESC55

Best Management Practices

BMP: SEDIMENT BASIN

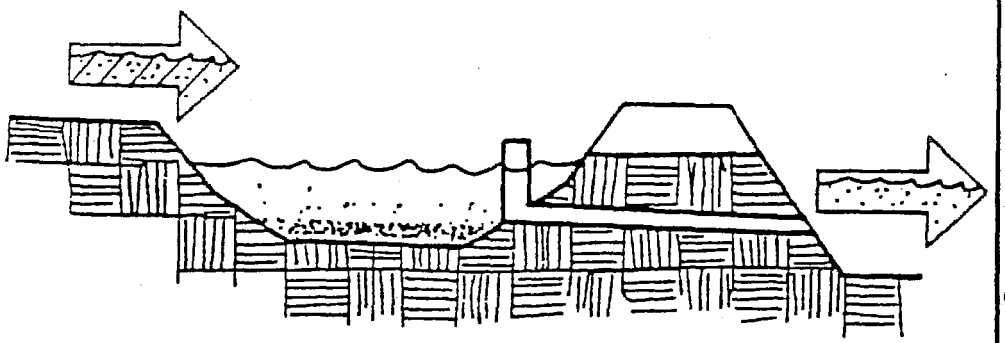

Objectives

- *Housekeeping Practices*
- *Contain Waste*
- *Minimize Disturbed Areas*
- *Stabalize Disturbed Areas*
- *Protect Slopes/Channels*
- *Control Site Perimeter*
- *Control Internal Erosion*

GENERAL DEFINITION

A pond created by excavation or constructing an embankment, and designed to retain or detain runoff sufficiently to allow excessive sediment to settle.

SUITABLE APPLICATIONS

- At the outlet of all disturbed watershed 10 acres or larger.
- At the outlet of smaller disturbed watersheds, as necessary.
- Where post construction detention basins will be located.
- Should be used in association with dikes, temporary channels, and pipes used to divert disturbed areas into the basin and undisturbed areas around the basin.

INSTALLATION/APPLICATION

- Construct before clearing and grading work begins.
- Do <u>not</u> locate in a stream.
- All basin sites should be located where failure of the embankment would not cause loss of life/property damage.
- Large basins are subject to state/local dam safety requirements.
- Securely anchor and install an anti-seep collar on the outlet pipe/riser, and provide an emergency spillway for passing major floods (see local flood control agency).
- The basin volume should be sized to capture runoff from a 2-year, 24-hour storm, or other appropriate design storms specified by the local agency. A detention time of 24 to 40 hours should allow 70 to 80 percent of sediment to settle.
- The basin volume consists of two zones:
  - A sediment storage zone at least 1 foot deep.
  - A settling zone at least 2 feet deep.
- The length to settling depth ratio (L/SD) should be less than 200.
- The length to width ratio should be greater than 6:1, or baffles are required to prevent short circuiting.

REQUIREMENTS

- Maintenance
  - Inspect weekly and after each rain.
  - Remove sediment where the sediment storage zone is half full.
- Cost: Average annual cost for installation and maintenance (2 year useful life, source: EPA, 1992)
  - Basin less than 50,000 $ft.^3$: \$0.40 per $ft.^3$ (\$700 per drainage acre)
  - Basin size greater than 50,000 $ft.^3$: \$0.20 per $ft.^3$ (\$350 per drainage acre)

Targeted Pollutants

- ● *Sediment*
- ○ *Nutrients*
- ◒ *Toxic Materials*
- ○ *Oil & Grease*
- ○ *Floatable Materials*
- ○ *Other Construction Waste*

- ● *Likely to Have Significant Impact*
- ○ *Probable Low or Unknown Impact*

Implementation Requirements

- ○ *Capital Costs*
- ◒ *O&M Costs*
- ○ *Maintenance*
- ○ *Training*
- ○ *Suitability for Slopes >5%*

● *High* ○ *Low*

ESC56

Best Management Practices

LIMITATIONS

- The basin should have shallow side slopes (minimum 4:1) or be fenced to prevent drowning.
- Sites with very fine sediments (fine silt and clay) may require longer detention times for effective sediment removal.
- Basins in excess of 25 feet height and/or an impounding capacity of 50 ac. ft. must obtain approval from Division of Safety of Dams.
- Standing water may cause mosquitos or other pests to breed.
- Basins in excess of certain depth and storage volume criteria must meet State Division of Safety of Dams (DSOD) and local safety requirements.

ESC56

Best Management Practices

Additional Information — Sediment Basin

A sediment basin is a controlled storm water release structure formed by excavation or by constructing an embankment of compacted soil across a drainageway, or other suitable location. Its purpose is to collect and store sediment from sites cleared and/or graded during construction or for extended periods of time before reestablishment of permanent vegetation and/or construction of permanent drainage structures. It is intended to trap sediment before it leaves the construction site. The basin is a temporary measure (with a design life of 12 to 18 months) and is to be maintained until the site area is permanently protected against erosion or a permanent detention basin is constructed.

Sedimentation basins are suitable for nearly all types of construction projects. Whenever possible, construct the sedimentation basins before clearing and grading work begins.
Basins should be located at the stormwater outlet from the site, but not in any natural or undisturbed stream. A typical application would include temporary dikes, pipes, and/or channels to divert runoff to the basin inlet.

Many development projects in California will be required by local ordinances to provide a storm water detention basin for post-construction flood control, desiltation, or storm water pollution control. A temporary sediment basin may be constructed by rough grading the post-construction control basins early in the project.

Sediment basins trap 70-80 percent of the sediment which flows into them if designed according to this handbook. Therefore, they should be used in conjunction with erosion control practices such as temporary seeding, mulching, diversion dikes, etc., to reduce the amount of sediment flowing into the basin.

Installation/Application Criteria

Planning:
To improve the effectiveness of the basin, it should be located to intercept runoff from the largest possible amount of disturbed area. The best locations are generally low areas below disturbed areas. Drainage into the basin can be improved by the use of diversion dikes and ditches. The basin must not be located in a stream but should be located to trap sediment-laden runoff before it enters the stream. The basin should not be located where its failure would result in the loss of life or interruption of the use or service of public utilities or roads.

Design:
- The sedimentation basin volume consists of two zones:
  - The sediment storage zone (at least 1 foot in depth).
  - A settling zone at least 2 feet in depth.
- The sedimentation basin may be formed by partial excavation and/or by construction of a compacted embankment. It may have one or more inflow points.
- A securely anchored riser pipe with an anti-seep collar is the principal outlet, along with an emergency overflow spillway. A solid riser pipe with two 1-inch diameter dewatering holes located at the top of the sediment storage volume on opposite sides of the riser pipe usually provides sufficient detention time for basins draining about 10 acres. Rock, rip-rap, or other suitable outlet protection is provided to reduce erosion at the riser pipe outlet.
- Settling Zone Volume

ESC56

Best Management Practices

Additional Information — Sediment Basin

The settling zone volume is determined by the following equation:

$$(V) = 1.2(SD)Q / V_{SED}$$

Q = design inflow based on the peak discharge from a specified design storm (e.g., a 2-year, 24-hour duration design storm event) from the tributary drainage area as computed using the methods required by the local flood control agency. Provide a minimum of 67 cubic yards of settling volume per acre of drainage if a design storm is not specified.

V_{SED} = the settling velocity of the design soil particle. The design particle chosen is medium silt (0.02 mm). This has a settling velocity (V_{SED}) of 0.00096 ft/sec. As a general rule it will not be necessary to design for a particle of size less than 0.02 mm, especially since the surface area requirement increases dramatically for smaller particle sizes. For example, a design particle of 0.01 mm requires about three times the surface area of 0.02 mm. Note also that choosing V_{SED} of 0.00096 ft/sec equates to a surface area (SA) of 1250 sq. ft. per cfs of inflow.

SD = settling depth, which should be at least 2 ft., and no shallower than the average distance from the inlet to the outlet of the pond (L) divided by 200 (i.e., SD > L/200).

Total sediment basin volume and dimension are determined as outlined below:

a. The details shown in the attached figure may be useful in designing the sediment basin.
b. Determine basin geometry for the sediment storage volume calculated above using a minimum of 1 ft depth and 3:1 side slopes from the bottom of the basin. Note, the basin bottom is level.
c. Extend the basin side slopes (at 3:1 max.) as necessary to obtain the settling zone volume as determined above.
d. Adjust the geometry of the basin to effectively combine the settling zone volume and sediment storage volumes while preserving the depth and side slope criteria.
e. Provide an emergency spillway with a crest elevation one foot above the top of the riser pipe.
f. The ratio between the basin length and width of the pond should either be greater than 6:1, or baffles should be installed to prevent short-circuiting.

Limitations

Sediment traps and ponds must be installed only within the property limits. Failure of the structure must not result in loss of life, damage to homes or buildings, or interruption of use or service of public roads or utilities. Also, sediment traps and ponds are attractive to children and can be very dangerous. Local ordinances regarding health and safety must be adhered to. If fencing of the pond is required, the type of fence and its location shall be shown in the SWPPP and in the construction specifications.

- Generally, temporary sedimentation ponds are limited to drainage of 5 acres or more.
- Sediment ponds may be capable of trapping smaller sediment particles if additional detention time is provided. However, they are most effective when used in conjunction with other BMPs such as seeding or mulching.
- Ponds may become an "attractive nuisance" and care must be taken to adhere to all safety practices.
- Sediment ponds designed according to this handbook are only practically effective in removing sediment down to about the medium silt size fraction. Sediment-laden runoff with smaller size fractions (fine silt and clay) will pass through untreated emphasizing the need to stabilize the soil quickly.

ESC56

Best Management Practices

Additional Information — Sediment Basin

REFERENCES

A Current Assessment of Urban Best Management Practices: Techniques for Reducing Nonpoint Source Pollution in the Coastal Zones, Metropolitan Washington Council of Governments, March, 1992.

Best Management Practices and Erosion Control Manual for Construction Sites, Flood Control District of Maricopa County, Rough Draft - July 1992.

Draft - Sedimentation and Erosion Control, An Inventory of Current Practices, U.S.E.P.A., April, 1990.

Environmental Criteria Manual, City of Austin, Texas.

Guidlines for the Design and Construction of Small Embankment Dams, Division of Safety of Dams, California Department of Water Resources, March 1986.

Manual of Standards of Erosion and Sediment Control Measures, Association of Bay Area Governments, Jun 1981.

Proposed Guidance Specifying Mnangement Measures for Sources of Nonpoint Pollution in Coastal Water, Work Group Working Paper, USEPA, April, 1992.

Stormwater Management Water for the Puget Sound Basin, Washington State Department of Ecology, The Technical Manual - February 1992, Publication # 91-75.

Water Quality Management Plan for the Lake Tahoe Region, Volume II, Handbook of Management Practices, Tahoe Regional Planning Agency - November 1988.

ESC56

Best Management Practices

Additional Information — Sediment Basin

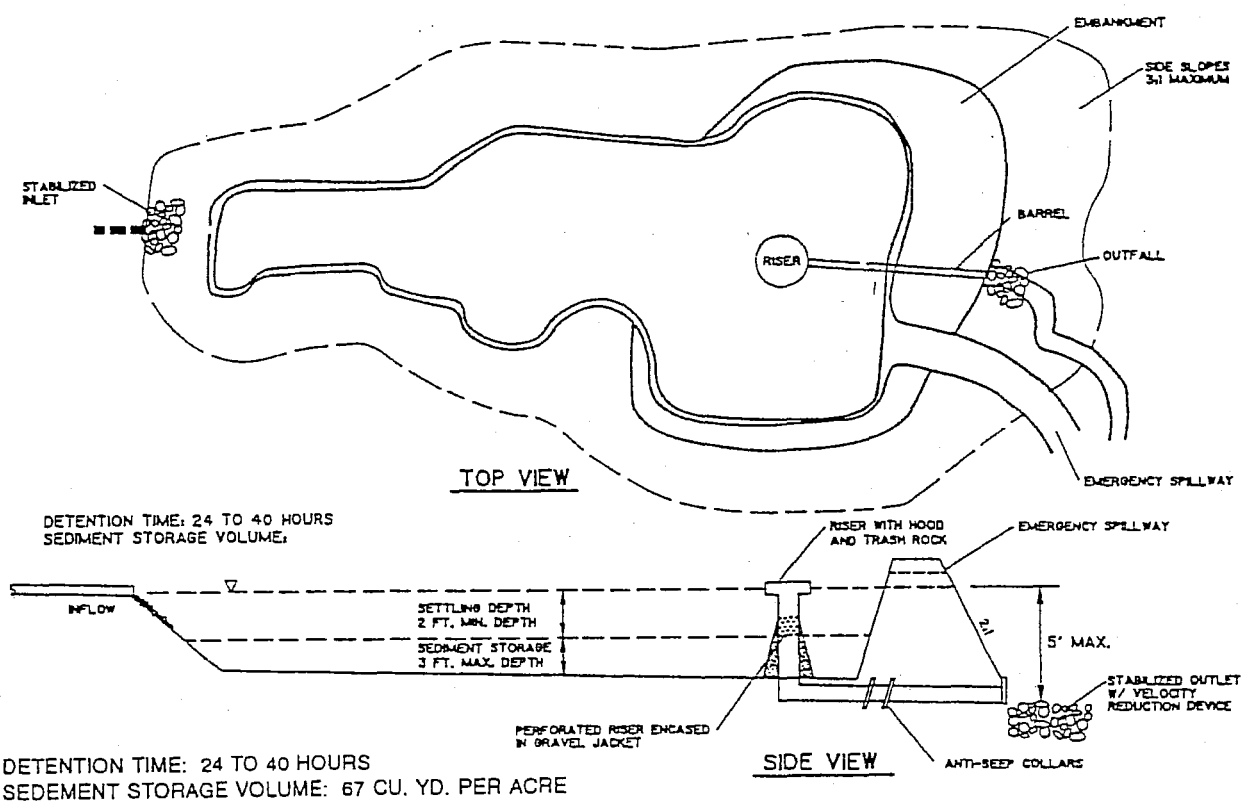

DETENTION TIME: 24 TO 40 HOURS
SEDEMENT STORAGE VOLUME: 67 CU. YD. PER ACRE

TEMPORARY SEDIMENT BASIN

ESC56

Best Management Practices

6. *MEASURING BMP PERFORMANCE*

INTRODUCTION

One of the final steps in the preparation of the Storm Water Pollution Prevention Plan (SWPPP) is to develop a program to monitor how well the BMPs work, and to evaluate whether additional BMPs are required. The construction general permit requires that a monitoring, inspection, and maintenance plan with the following objectives be a component of the SWPPP:

- To inspect BMPs annually, as well as prior to and after a storm event.
- To aid in implementation of the SWPPP.
- To measure the effectiveness of the BMPs.

To meet these objectives the monitoring effort has these elements:

- Site inspection
- Certification of compliance
- BMPs monitoring
- Record keeping
- SWPPP review and modifications

SITE INSPECTIONS

Inspections before and after a storm event are required by the construction general permit. At the onset of a construction project (e.g., clearing, grubbing, earth movement) it may be more appropriate to perform inspection of the BMPs on a regular basis instead of just before and after a storm. This will allow sufficient time for any corrections or improvements to be made in time before the storm. An inspector should be identified in the SWPPP. Inspection can usually be performed as part of a regular construction inspection program.

According to the general permit, a tracking or follow-up procedure must follow an inspection which discovers deficiencies in the BMPs.

The results of the inspection and assessment must be written. Include the date of the inspection, the person(s) who performed the inspection, and the observations. Inspection records must be retained for three years. A sample inspection form is provided at the end of this chapter.

It is possible that activities may have changed since the last inspection, by type or location. These should be noted. New BMPs and adjustments to the SWPPP may be necessary.

CERTIFICATION OF COMPLIANCE

You must certify, based on the annual inspection, that your facility is in compliance with the requirements of the general permit and the SWPPP. If the inspection indicates you are not in compliance, you are to notify your Regional Water Quality Control Board. The notification is to identify the type(s) of noncompliance, the actions identified to come into compliance, and a time schedule to achieve compliance.

BMPs MONITORING

The type of BMP monitoring depends on which BMP is implemented. In the case of contractor activity BMPs the monitoring consists of visual inspection to ensure that the BMP was implemented and maintained according to the SWPPP. Such inspection would include:

- looking for evidence of spills and resulting clean -up procedures (e.g., supplies of spill cleanup material);

- examining integrity of containment structures;
- verifying use of employees education programs for the various activities;
- noting the location of activity (e.g., outdoor vs. indoor, concrete vs. grass);
- verifying adequacy of trash receptacles;
- verifying waste disposal practices (e.g., recycle vs. hazardous waste bins);

Other inspection areas are described in the fact sheets found in Chapter 4.

In the case of sediment and erosion control BMPs, the monitoring program should consist of regular inspection to determine the following:

Are the BMPs installed effective?

The effectiveness of the BMP would be based on the presence of silt behind or within control devices, the presence of silt downstream of the site and signs of erosion in stabilized areas after a storm event. The system may be deemed ineffective if:

1. Silt is present outside of the control area;

2. Structural controls are breached or fail under storm events of minor (less than 2 year, 24 hour) intensity;

3. Rills and gullies are present in stabilized slopes;

4. Evidence of silt buildup in downstream storm drains and drainage ways is apparent; and

5. Controls are not maintained in accordance with design guidelines.

Have drainage patterns changed?

If the site has undergone significant grading operations, changing the drainage patterns, adjustments to the BMP controls will likely be required to address this change. The inspector shall determine the extent of the drainage pattern changes, if the changes are addressed in the SWPPP and if modifications to the erosion and sediment controls are required to address this change.

Are sediment and erosion BMPs installed properly?

The SWPPP BMPs should include details or references to allow for the proper construction of structural or vegetative erosion and sediment control devices. The inspector should insure that these systems are installed according to the SWPPP in the proper locations.

Are areas stabilized as quickly as possible after completion of construction activities in an area?

Active construction areas (inactive construction areas may be defined as areas in which no construction activity will occur for a period of 30 days or longer) which have been disturbed should be stabilized through the use of vegetation, mulch, erosion control matting or structural methods within 7 calendar days from the last construction activity in the area. If construction, climatological, or other site conditions do not allow stabilization within seven (7) days, the SWPPP should define alternative approaches (e.g., watering or chemicals for dust control).

Are the BMPs properly maintained?

Maintenance of the erosion and sediment control devices is the most critical as well as the potentially most expensive erosion control plan. The inspector should inspect the site on a regular basis and after any storm of 0.5 inches or greater to determine maintenance requirements and general condition of the installed system. The local jurisdiction may also inspect the site on a typical bi-weekly basis to assess the maintenance performed on the systems. The following maintenance tasks should be performed on a regular basis. All maintenance related to a storm event should be completed within 48 hours of the storm event.

1. Removal of silt from barriers and sedimentation devices.

2. Replacement or repair of worn or damaged geotextile fabric.

3. Repair or replacement of damaged structural controls.

4. Seeding or mulching of damaged stabilized areas.

5. BMPs for any chemicals or fuels not addressed in the SWPPP must be developed.

6. Other control maintenance as defined in the BMP fact sheet of this handbook or part of the approved SWPPP.

RECORD KEEPING

Records of all inspections, compliance certifications, and noncompliance reporting are to be retained for at least three years by the owner/developer.

It is suggested that records of incidents such as spills, or other episodic releases be kept. Analyzing a history of this information can provide insight into modifying the BMPs. The history may suggest a predominance of spills in particular locations, from particular activities, and/or of particular materials. Efforts can be focused accordingly. Photographs may be useful. Also keep a record of maintenance activities or any other BMPs that are of an "action" nature. It is easy to demonstrate that a BMP that involves a physical change, such as berming or covering, has been accomplished. But actions that relate to good housekeeping can only be demonstrated by record keeping. Keeping a record of sediment trap cleaning, for example, also provides insight into how soon it takes for the trap to refill.

SWPPP REVIEW AND MODIFICATIONS

During the course of construction, unanticipated changes may occur which affects the SWPPP, such as schedule changes, phasing changes, staging area modifications, off-site drainage impacts and repeated failures of designed controls. These changes must be made known and SWPPP revised accordingly. During the preparation and review of the modified SWPPP, construction may continue with temporary modifications to the erosion and sediment control BMPs.

Revisions to the SWPPP are also required when the properly installed systems are ineffective in the prevention of silt transport off of the site. This may be due to unforseen site conditions or construction techniques which adversely affect the system as designed. Revisions to the SWPPP are also required if there is a new, deleted, or moved activity that could result in a significant amount of pollutants discharged in the storm water.

SAMPLE
Construction General Permit
Inspection Checklist

[ ] Regular Inspection [ ] Rainfall Event Inspection (Before)
[ ] Rainfall Event Inspection (After) Rainfall _____ Inches

Inspected By:_____ Date:_____

Project:_____

YES	NO	DOES NOT APPLY	
			Are the BMPs called for on the SWPPP installed in the proper location and according to the specifications for the SWPPP?
			Are all operational storm drain inlets protected from sediment inflow?
			Do any structural practices require repair or clean-out to maintain adequate function? If yes, indicate which ones:
			Are construction on-site traffic routes, parking, and storage of equipment and supplies restricted to areas specifically designated for those uses?
			Are locations of temporary soil stock piles or construction materials in approved areas?
			Do any seeded or landscaped areas require maintenance, irrigation, fertilization, seeding, or mulching?
			Is there any evidence that sediment is leaving the site?
			Is there any evidence of erosion or cut or fill slopes?
			Is there any evidence of sediment, debris, or mud on public roads at intersections with site access roads?
			Does the SWPPP require revisions? If yes, explain:

APPENDIX A

STATE OF CALIFORNIA GENERAL CONSTRUCTION ACTIVITY STORM WATER PERMIT

STATE OF CALIFORNIA - CALIFORNIA ENVIRONMENTAL PROTECTION AGENCY

PETE WILSON, Governor

STATE WATER RESOURCES CONTROL BOARD
PAUL R. BONDERSON BUILDING
901 P STREET
P. O. BOX 100
SACRAMENTO, CALIFORNIA 95812-0100
916/657-0941

FAX: 916/657-0932

SEP 8 1992

SEP 14 1992

TO: Interested Parties

GENERAL CONSTRUCTION ACTIVITY STORM WATER PERMIT

Enclosed is a copy of the General Construction Activity Storm Water Permit (Permit), including the Fact Sheet, Notice of Intent (NOI) form, and NOI instructions, which was adopted by the State Water Resources Control Board (State Water Board) on August 20, 1992.

To be covered by this Permit, the owners of land where a construction activity occurs must submit the completed NOI form, with the appropriate fee, to the State Water Board. Permits are required for all storm water discharges associated with a construction activity where clearing, grading, and excavation results in a land disturbance of five or more acres. Storm water discharges from a construction activity that results in a land disturbance of less than five acres, but which is part of a larger common plan of development or sale, also require a permit. Permits are required until the construction is complete.

A permit must be obtained by October 1, 1992 for an ongoing construction activity that satisfies these criteria. For a new construction activity that begins after October 1, 1992, a permit must be obtained before construction starts.

The NOI must be sent to the following address:

State Water Resources Control Board
Division of Water Quality
Attention: Storm Water Permit Unit
P. O. Box 1977
Sacramento, CA 95812-1977

The NOI must be accompanied by the appropriate annual fee. The fee will either be $250.00 or $500.00 depending on the area of the construction activity. The NOI will not be processed if not accompanied by the fee. Enclosure 1 describes those areas in which the $250.00 annual fee applies. Dischargers in all other areas of the State must pay the $500.00 fee.

SEP 8 1992

Attachment No. 1 to the Permit lists the nine California Regional Water Quality Control Boards' (Regional Water Boards) addresses and telephone numbers. If you have any questions or concerns related to the Permit, you should discuss them with Regional Water Board staff.

We would appreciate it if you would inform other members of the construction industry of the need to obtain a storm water permit. If you know of others that need to obtain a permit but may be unaware of the State's program, please have them call the State Water Board's Construction Activity Storm Water Hotline at 916/657-1146.

Sincerely,

Walt Pettit
Executive Director

Enclosures (2)

Enclosure 1

AREAS OF THE STATE IN WHICH THE $250.00 ANNUAL FEE APPLIES

Municipality	Permitted Area
1. Alameda County	The permitted area of the county is the westerly side of the county which drains to San Francisco Bay.
2. Los Angeles County	The permitted area consists of the five hydrologic subbasins which drain into the Pacific Ocean as follows: Santa Monica Bay, Upper Los Angeles River, including Sycamore Channel, Upper San Gabriel River, Lower Los Angeles River, and Lower San Gabriel River, including Santa Clarita Valley. The permit does not cover the cities of Avalon, Lancaster, and Palmdale.
3. Orange County	The permitted area is delineated by the Los Angeles County line on the northwest, the San Bernardino County line on the north and northeast, the Riverside County line on the east, the San Diego County line on the south, and the Pacific Ocean on the southwest.
4. Riverside County	The permitted area is delineated by the San Bernardino County line on the north and northwest, the Orange County line on the west, the San Diego County line on the south, and the Santa Ana/Colorado River Basin Regional Boards' boundary line on the east (mountain crest).
5. Sacramento County	The entire county except for the incorporated City of Isleton.
6. San Bernardino County	The permitted area is delineated by the Santa Ana-Lahontan Regional Board boundary line on the north and northeast, the Santa Ana-Colorado River Basin Regional Board boundary line on the east, the San Bernardino-Riverside

Municipality	Permitted Area
	County boundary line on the south and southeast, the San-Bernardino-Orange County boundary line on the southwest, and the San Bernardino-Los Angeles County boundary line on the west.
7. San Diego County	The permitted area is delineated by the San Diego County lines on the north and south, the Pacific Ocean on the west, and the San Diego/Colorado River Basin Regional Board boundary on the east (mountain crest).
8. Santa Clara County	The Santa Clara Valley Basin portion of the county containing eleven hydrologic subbasins which discharge into watercourses which in turn flow into South San Francisco Bay.

STATE WATER RESOURCES CONTROL BOARD

901 P STREET, SACRAMENTO, CA 95814

FACT SHEET

FOR

NATIONAL POLLUTANT DISCHARGE ELIMINATION SYSTEM (NPDES)

GENERAL PERMIT FOR

STORM WATER DISCHARGES ASSOCIATED WITH

CONSTRUCTION ACTIVITY

BACKGROUND

In 1972, the Federal Water Pollution Control Act (also referred to as the Clean Water Act [CWA]) was amended to provide that the discharge of pollutants to waters of the United States from any point source is unlawful, unless the discharge is in compliance with a NPDES permit. The 1987 amendments to the CWA added Section 402(p) which establishes a framework for regulating municipal and industrial storm water discharges under the NPDES program. On November 16, 1990, the U.S. Environmental Protection Agency (USEPA) published final regulations that establish storm water permit application requirements for specified categories of industries. The regulations require that discharges of storm water associated with construction activity (storm water discharges) from soil disturbances of five (5) acres or more must be regulated as an industrial activity and covered by a NPDES permit.

In a recent ruling, the Ninth Circuit Court of Appeals invalidated the exemption granted by USEPA for storm water discharges from soil disturbances of less than five acres but remanded the regulation to USEPA for further action. The State Water Board, at this time, is not requiring storm water discharges from soil disturbances of less than five acres to be covered by this general permit. Instead, the State Water Board will await future USEPA or court action clarifying the types of storm water discharges that must be permitted. If necessary, the State Water Board will reopen the general permit to accommodate such a clarification.

While Federal regulations allow two permitting options for storm water discharges (individual permits and general permits), the State Water Board has elected to adopt only one statewide general permit at this time that will apply to all storm water discharges, except from those on Indian lands and the Lake Tahoe Hydrologic Unit. The State Water Board has previously adopted a separate statewide general permit for all other industrial storm water discharge categories, except for those discharges in Santa Clara County that drain to San Francisco Bay and on Indian Lands.

This general permit requires all owners of land where construction activity occurs (dischargers) to:

1. Eliminate or reduce non-storm water discharges to storm sewer systems and other waters of the nation,
2. Develop and implement a storm water pollution prevention plan, and
3. Perform inspections of storm water pollution prevention measures (control practices).

This general permit will be implemented and enforced by the nine California Regional Water Quality Control Boards (Regional Water Boards).

The general permit accompanying this fact sheet is intended to initiate regulation of storm water discharges. Regulating many storm water discharges under one permit will greatly reduce the otherwise overwhelming administrative burden associated with permitting individual storm water discharges. Dischargers must submit a notice of intent (NOI) to obtain coverage under this general permit. It is expected that as the storm water program develops, the Regional Water Boards may issue general permits containing more specific permit provisions. When this occurs, those dischargers will no longer be regulated by this general permit.

TYPES OF CONSTRUCTION ACTIVITY COVERED BY THIS GENERAL PERMIT

Construction activity includes clearing, grading, or excavation that results in soil disturbance of at least five acres of total land area. Construction activity that results in soil disturbances of less than five acres requires a permit if the construction activity is part of a larger common plan of development or sale. Construction activity does not include routine maintenance to maintain original line and grade, hydraulic capacity, or original purpose of the facility, nor does it include emergency construction activities required to protect public health and safety. Dischargers may confirm with the local Regional Water Board that a particular routine maintenance is not subject to this general permit.

Storm water discharges from those portions of a construction project which include dredging and/or filling which are subject to regulation by the U.S. Army Corps of Engineers (Corps), pursuant to Section 10 of the Rivers and Harbors Act and/or Section 404 of the CWA, are excluded from regulation under this general permit. Said portions of the project are, however, subject to the certification requirements of Section 401 of the CWA and must be addressed via the certification process. Storm water discharges from dredge spoil placement which occurs outside of Corps jurisdiction (upland sites) and is part of a construction activity which disturbs five or more acres of land are covered by this general permit.

NOTIFICATION REQUIREMENTS

The owner of the land where the construction activity is occurring is responsible for obtaining coverage under this general permit by filing a NOI and appropriate fee in accordance with the NOI instructions. For construction activity conducted on easements, or on nearby property by agreement or permission, the entity responsible for the construction activity must file a NOI.

A separate NOI must be submitted to the State Water Board for each covered construction activity. Owners of land with ongoing construction activity will be required to submit a NOI by September 30, 1992. Owners of land with construction activity commencing after September 30, 1992 must submit a NOI prior to commencement of construction activity. The NOI requirements of the general permit are intended to establish a mechanism which can be used to clearly identify the responsible parties, locations, and scope of operations of dischargers covered by the general permit.

The NOI must be sent to the following address:

California State Water Resources Control Board
Division of Water Quality
Storm Water Permit Unit
P.O. Box 1977
Sacramento, CA 95812-1977

The current annual fee for this general permit is either $500 or $250 depending on location. Dischargers who fail to obtain coverage under this general permit and are not otherwise covered by a NPDES permit for storm water discharges will be in violation of the CWA and the California Water Code. When construction is complete or ownership has been transferred, dischargers are required to notify the State Water Board indicating that all State and local requirements have been met in accordance with Special Provision 7 of the general permit.

TYPES OF CONSTRUCTION ACTIVITY NOT COVERED BY THIS GENERAL PERMIT

This general permit does not apply to storm water discharges from those areas on Indian lands and the Lake Tahoe Hydrologic Unit. Storm water discharges in the Lake Tahoe Hydrologic Unit will be regulated by a separate permit(s) adopted by the California Regional Water Quality Control Board, Lahontan Region (Lahontan Regional Water Board). USEPA will regulate storm water discharges on Indian lands. Permit applications for storm water discharges that will be conducted in the Lake Tahoe Hydrologic Unit should be submitted directly to the Lahontan Regional Water Board.

DESCRIPTION OF GENERAL PERMIT CONDITIONS

The following is a brief description of the major provisions of the general permit and the basis for the general permit. Dischargers should read the general permit carefully.

Prohibitions

This general permit authorizes the discharge of storm water associated with construction activity from construction sites. It prohibits the discharge of materials other than storm water and all discharges which contain a hazardous substance in excess of reportable quantities established at 40 Code of Federal Regulations (CFR) 117.3 or 40 CFR 302.4 unless a separate NPDES permit has been issued to regulate those discharges.

Effluent Limitations

Permits for storm water discharges associated with construction activity must meet all applicable provisions of Sections 301 and 402 of the CWA. These provisions require controls of pollutant discharges that utilize best available technology economically achievable (BAT) and best conventional pollutant control technology (BCT) to reduce pollutants, and any more stringent controls necessary to meet water quality standards.

It is not feasible at this time for the State Water Board to establish numeric effluent limitations. The reasons why establishment of numeric effluent limitations is not feasible is discussed in detail in State Water Board Orders Nos. WQ 91-03 and WQ 91-04. Therefore, the effluent limitations contained in this general permit are narrative and include the requirement to implement appropriate pollution prevention control practices and/or Best Management Practices (BMPs). The BMPs may include treatment of storm water discharges, along with source reduction, which will constitute BAT and BCT and will achieve compliance with water quality standards. The effluent limitations constitute compliance with the requirements of the CWA. However, if storm water discharges cause water quality standards to be exceeded, this general permit may be amended, or the appropriate Regional Water Board may adopt a general permit which replaces this general permit to include additional effluent limitations necessary to achieve water quality standards. Elimination or reduction of non-storm water discharges is a major goal of this general permit. Non-storm water discharges include a wide variety of sources, including improper dumping, spills, or leakage from storage tanks or transfer areas. Non-storm water discharges may contribute a significant pollutant load to receiving waters. Measures to control spills, leakage, and dumping and to prevent illicit connections during construction can often be addressed through BMPs. This general permit prohibits the discharge of materials other than storm water. The general permit, however, recognizes that certain non-storm water discharges may be necessary for the practical performance and completion of construction projects. Such discharges include, but are not limited to: landscape irrigation of erosion control measures, pipe flushing and testing, street washing, and dewatering. Such discharges are allowed by this general permit if the discharges are (1) infeasible to eliminate, (2) comply with BMPs as described in the Storm Water Pollution Prevention Plan, (3) do not cause or contribute to a violation of water quality standards, and (4) are not required to be permitted by the local Regional Water Board (e.g., some Regional Water Boards have adopted general permits for dewatering discharges).

Storm Water Pollution Prevention Plan (SWPPP)

This general permit requires development and implementation of SWPPPs emphasizing storm water BMPs. This approach provides the flexibility necessary to establish control practices which can appropriately address sources of pollutants at different construction activities.

All dischargers must prepare, retain at the construction site, and implement a SWPPP. The SWPPP has two major objectives: (1) to help identify the sources of sediment and other pollutants that affect the quality of storm water discharges and (2) to describe and ensure the implementation of practices to reduce sediment and other pollutants in storm water discharges. The SWPPP must include BMPs which address source reduction, and, if necessary, should include BMPs which require treatment.

The SWPPPs are considered reports available to the public under Section 308(b) of the CWA and will be made available by the Regional Water Board upon request. Required elements of the SWPPPs include: (1) site description, (2) erosion and sediment controls, (3) waste disposal, (4) implementation of approved local plans, (5) proposed post-construction controls, including description of local post-construction erosion and sediment control requirements, and (6) non-storm water management.

Monitoring Program

Another major feature of the general permit is the development and implementation of a monitoring program. All dischargers are required to conduct inspections of the construction site prior to anticipated storm events and after actual storm events to identify areas contributing to a storm water discharge and to evaluate whether measures to reduce pollutant loadings identified in the SWPPP are adequate and properly implemented in accordance with the terms of the general permit or whether additional control practices are needed.

Each discharger must certify annually that its construction activity is in compliance with the requirements of this general permit and its SWPPP. Dischargers who cannot annually certify compliance or who have had other instances of noncompliance must notify the appropriate Regional Water Board. A well-developed monitoring program will provide a good method for checking on the effectiveness of the SWPPP.

Retention of Records

The discharger is required to retain records of all monitoring information, copies of all reports required by this general permit, and records of all data used to complete the NOI for the construction activity to be covered by the general permit for a period of at least three years. This period may be extended by request of the State and/or Regional Water Boards. With the exception of noncompliance reporting, dischargers are not required to submit the records, except upon specific request by the Regional Water Board.

STATE WATER RESOURCES CONTROL BOARD (STATE WATER BOARD)
ORDER NO. 92-08-DWQ
NATIONAL POLLUTANT DISCHARGE ELIMINATION SYSTEM (NPDES)
GENERAL PERMIT NO. CAS000002

WASTE DISCHARGE REQUIREMENTS (WDRS)
FOR
DISCHARGES OF STORM WATER RUNOFF ASSOCIATED WITH CONSTRUCTION ACTIVITY

The State Water Board finds that:

1. Federal regulations for controlling pollutants in storm water runoff discharges were issued by the U.S. Environmental Protection Agency (USEPA) on November 16, 1990 (40 Code of Federal Regulations (CFR) Parts 122, 123, and 124). The regulations require discharges of storm water associated with construction activity including clearing, grading, and excavation activities (except operations that result in disturbance of less than five acres of total land area and which are not part of a larger common plan of development or sale)[1/] to obtain a NPDES permit and to implement Best Available Technology Economically Achievable (BAT) and Best Conventional Pollutant Control Technology (BCT) to reduce or eliminate storm water pollution.

2. This general permit shall regulate pollutants in discharges of storm water associated with construction activity (storm water discharges) except from those areas on Indian lands, the Lake Tahoe Hydrologic Unit, and where the storm water discharge is determined ineligible for coverage under this general permit by the California Regional Water Quality Control Boards (Regional Water Boards). Attachment 1 contains addresses and telephone numbers of each Regional Water Board office.

3. This general permit does not preempt or supersede the authority of local storm water management agencies to prohibit, restrict, or control storm water discharges to separate storm sewer systems or other watercourses within their jurisdiction, as allowed by State and Federal law.

4. To obtain authorization for current and future storm water discharges pursuant to this general permit, the owner of a site where construction activity occurs (discharger) must submit a Notice of Intent (NOI) and appropriate fee to the State Water Board. Dischargers who submit a NOI and appropriate fee are authorized to discharge storm water under the terms and conditions of this general permit.

5. If an individual NPDES permit is issued to a discharger otherwise subject to this general permit, or an alternative general permit is subsequently adopted which covers storm water discharges regulated by this general permit, the applicability of this general permit to such discharges is automatically terminated on the effective date of the individual permit or the date of approval for coverage under the subsequent general permit.

6. This action to adopt a NPDES permit is exempt from the provisions of the California Environmental Quality Act (Public Resources Code Section 21100, et seq.), in accordance with Section 13389 of the California Water Code.

1/ In a recent ruling, the Ninth Circuit Court of Appeals invalidated the exemption granted by USEPA for storm water discharges from soil disturbances less that five acres but remanded to USEPA for further action. This general permit may be reopened, as necessary, to accommodate a redefinition of the types of storm water discharges that must be permitted.

7. The State Water Board adopted the California Ocean Plan on March 22, 1990 and the California Inland Surface Waters Plan and Enclosed Bays and Estuaries Plan on April 11, 1991. In addition, the Regional Water Boards have adopted and the State Water Board has approved Water Quality Control Plans (Basin Plans). Dischargers regulated by this general permit must comply with the water quality standards in these Plans and subsequent amendments thereto.

8. It is not feasible at this time to establish numeric effluent limitations for pollutants in storm water discharges from construction activities. Instead, the provisions of this general permit that require implementation of Best Management Practices (BMPs) to control and abate the discharge of pollutants in storm water discharges constitute compliance with BAT/BCT requirements and with requirements to achieve water quality standards.

9. Discharges of non-storm water may be necessary for the practical performance and completion of certain construction projects. Such discharges include, but are not limited to: landscape irrigation of erosion control measures, pipe flushing and testing, street washing, and dewatering. Such discharges are allowed under this general permit so long as they comply with BMPs as described in the Storm Water Pollution Prevention Plan and they do not cause or contribute to violation of any water quality standard.

10. Following adoption of this general permit, the Regional Water Boards shall enforce the provisions of this general permit including the monitoring and reporting requirements.

11. Following public notice in accordance with State and Federal laws and regulations, the State Water Board in a public meeting held May 14, 1992 heard and considered all comments. The State Water Board has prepared written responses to all significant comments.

12. This Order is a NPDES permit in compliance with Section 402 of the Clean Water Act (CWA) and shall take effect upon adoption by the State Water Board.

13. This general permit does not authorize discharges of fill or dredged material regulated by the U.S. Army Corps of Engineers under CWA Section 404 and does not constitute a waiver of water quality certification under CWA Section 401.

IT IS HEREBY ORDERED that all dischargers who file a Notice of Intent (NOI) indicating their intention to be regulated under the provisions of this general permit shall comply with the following:

A. DISCHARGE PROHIBITIONS:

1. Discharges of material other than storm water, which are not otherwise regulated by a NPDES permit, to a separate storm sewer system or waters of the nation are prohibited, except as allowed in Provision C.3.

2. Storm water discharges shall not cause or threaten to cause pollution, contamination, or nuisance.

3. Storm water discharges regulated by this general permit shall not contain a hazardous substance equal to or in excess of a reportable quantity listed in 40 CFR Part 117 and/or 40 CFR Part 302.

B. RECEIVING WATER LIMITATIONS:

1. Storm water discharges to any surface or ground water shall not adversely impact human health or the environment.

2. Storm water discharges shall not cause or contribute to a violation of any applicable water quality standards contained in the California Ocean Plan, Inland Surface Waters Plan, Enclosed Bays and Estuaries Plan, or the applicable Regional Water Board's Basin Plan.

C. SPECIAL PROVISIONS FOR CONSTRUCTION ACTIVITY:

1. All dischargers must file a NOI and appropriate fee for construction activities conducted at each site as required by Attachment 2: Notice of Intent--General Instructions.

2. All dischargers must develop and implement a Storm Water Pollution Prevention Plan in accordance with Section A: Storm Water Pollution Prevention Plan (SWPPP).

3. Discharges of non-storm water are allowed only when necessary for performance and completion of construction projects and where they do not cause or contribute to a violation of any water quality standard. Such discharges must be described in the SWPPP. Wherever feasible, alternatives which do not result in discharge of non-storm water shall be implemented, in accordance with Section A.7 of the SWPPP requirements.

4. All dischargers must develop and implement a monitoring program and reporting plan in accordance with Section B: Monitoring Program and Reporting Requirements.

5. All dischargers must comply with the lawful requirements of municipalities, counties, drainage districts, and other local agencies regarding discharges of storm water to separate storm sewer systems or other watercourses under their jurisdiction, including applicable requirements in municipal storm water management programs developed to comply with NPDES permits issued by the Regional Water Boards to local agencies.

6. All dischargers must comply with the standard provisions and reporting requirements contained in Section C: Standard Provisions.

7. The discharger may revoke (cancel) coverage under this general permit by submitting to the State Water Board certification, in accordance with the signatory requirements of Section C: Standard Provisions, Items 9 and 10, that construction activity has been completed, that all elements of the SWPPP have been completed, that construction and equipment maintenance waste have been disposed of properly, that the site is in compliance with all local storm water management requirements including erosion/sediment control requirements, policies, and guidelines. In addition, a discharger may revoke (cancel) coverage under this general permit when ownership of all or a portion of the project has been transferred. The new owner must comply with the provisions of Section A(2)(c) and B(3)(b) of this general permit. The revocation should accompany the NOI from the new owner when possible.

8. This general permit will expire on August 20, 1997. Upon reissuance of a NPDES general permit by the State Water Board, dischargers subject to the reissued general permit may be required to file a revised NOI.

D. REGIONAL WATER BOARD AUTHORITIES:

1. Following adoption of this general permit, Regional Water Boards shall:

   a. Implement the provisions of this general permit. Implementation of this general permit may include, but is not limited to, reviewing SWPPPs, reviewing monitoring reports, conducting compliance inspections, and taking enforcement actions.

   b. Issue permits as they deem appropriate to individual dischargers, categories of dischargers, or dischargers in a geographic area. Upon issuance of such permits by a Regional Water Board, the affected dischargers shall no longer be regulated by this general permit.

2. Regional Water Boards may provide guidance to dischargers on SWPPP and Monitoring Program implementation.

3. Regional Water Boards may require dischargers to retain records for more than three years.

4. Regional Water Boards may require additional monitoring and reporting program requirements.

CERTIFICATION

The undersigned, Administrative Assistant to the State Water Board, does hereby certify that the foregoing is a full, true, and correct copy of an order duly and regularly adopted at a meeting of the State Water Resources Control Board held on August 20, 1992.

AYE: W. Don Maughan
Eliseo M. Samaniego
Marc Del Piero
James M. Stubchaer

NO: None

ABSENT: John Caffrey

ABSTAIN: None

Maureen Marché
Administrative Assistant to the Board

Section A: STORM WATER POLLUTION PREVENTION PLAN

1. Objectives

A Storm Water Pollution Prevention Plan (SWPPP) shall be developed and implemented for each construction site covered by this general permit. The SWPPP shall be certified in accordance with the signatory requirements of Standard Provision C.9. The SWPPP shall be developed and amended, when necessary, to meet the following objectives:

a. To identify pollutant sources that may affect the quality of discharges of storm water associated with construction activity (storm water discharges) from the construction site, and

b. To identify, construct, and implement storm water pollution prevention measures (control practices) to reduce pollutants in storm water discharges from the construction site both during construction and after construction is completed.

2. Implementation Schedule

a. For construction activity commencing on and after October 1, 1992, the SWPPP must be developed and implemented concurrent with commencement of construction activities.

b. For construction activity commencing prior to and continuing beyond October 1, 1992, the SWPPP must be developed and implemented by October 1, 1992.

c. For ongoing construction activity involving a change of ownership of property covered by this general permit, the new owner must accept and maintain the existing SWPPP.

3. Availability

The SWPPP shall be kept on site during construction activity and made available upon request of a representative of the Regional Water Board and/or local agency.

4. Required Changes

a. The discharger shall amend the SWPPP whenever there is a change in construction or operations which may affect the discharge of significant quantities of pollutants to surface waters, ground waters, or a municipal separate storm sewer system. The SWPPP should also be amended if it is in violation of any condition of this general permit or has not achieved the general objective of reducing pollutants in storm water discharges.

b. The Regional Water Board, or local agency with the concurrence of the Regional Water Board, may require the discharger to amend the SWPPP.

5. Source Identification

The SWPPP shall provide a description of potential sources which are likely to add significant quantities of pollutants to storm water discharges or which may result in non-storm water discharges from the construction site. The SWPPP shall include, at a minimum, the following items:

a. A map extending approximately one-quarter mile beyond the property boundaries of the construction site showing: the construction site, surface water bodies (including known springs and wetlands[1/]), known wells, an outline of off-site drainage areas that discharge into the construction site, general topography, and the anticipated discharge location(s) where the construction site's storm water discharges to a municipal storm sewer system or other water body. The requirements of this paragraph may be included in the site map required under the following paragraph if appropriate.

b. A site map(s) showing:

i. Location of control practices used during construction;

ii. Areas used to store soils and wastes;

iii. Areas of cut and fill;

iv. Drainage patterns and slopes anticipated after major grading activities are completed;

v. Areas of soil disturbance;

vi. Surface water locations;

vii. Areas of potential soil erosion where control practices will be used during construction;

viii. Existing and planned paved areas and buildings;

ix. Locations of post-construction control practices;

x. An outline of the drainage area for each on-site storm water discharge point;

xi. Vehicle storage and service areas; and

xii. Areas of existing vegetation.

c. A narrative description of the following:

i. Toxic materials that are known to have been treated, stored, disposed, spilled, or leaked in significant quantities onto the construction site;

ii. Practices to minimize contact of construction materials, equipment, and vehicles with storm water;

iii. Construction material loading, unloading, and access areas;

iv. Preconstruction control practices (if any) to reduce sediment and other pollutants in storm water discharges;

v. Equipment storage, cleaning, and maintenance areas;

1/ The determination of whether wetlands exist shall be made by the person who prepares the SWPPP and shall not be binding upon any other person.

vi. Methods of on-site storage and disposal of construction materials; and

vii. The nature of fill material and existing data describing the soil on the construction site.

d. A list of pollutants (other than sediment) that are likely to be present in storm water discharges in significant quantities. Describe the control practices (if different from Item 6 below) appropriate to reduce these pollutants in the storm water discharges.

e. An estimate of the size of the construction site (in acres or square feet), an estimate of the runoff coefficient of the construction site before and after construction, and an estimate of the percentage of the area of the construction site that is impervious (e.g., pavement, buildings, etc.) before and after construction.

f. A copy of the NOI.

6. Erosion and Sediment Control

The SWPPP shall include:

a. A description of soil stabilization practices. These practices shall be designed to preserve existing vegetation where feasible and to revegetate open areas as soon as feasible after grading or construction. In developing these practices, the discharger shall consider: temporary seeding, permanent seeding, mulching, sod stabilization, vegetative buffer strips, protection of trees, or other soil stabilization practices. At a minimum, the operator must implement these practices on all disturbed areas during the rainy season.

b. A description or illustration of control practices which, to the extent feasible, will prevent a net increase of sediment load in storm water discharge. In developing control practices, the discharger shall consider a full range of erosion and sediment controls such as detention basins, straw bale dikes, silt fences, earth dikes, brush barriers, velocity dissipation devices, drainage swales, check dams, subsurface drain, pipe slope drain, level spreaders, storm drain inlet protection, rock outlet protection, sediment traps, temporary sediment basins, or other controls. At a minimum, sandbag dikes, silt fences, straw bale dikes, or equivalent controls practices are required for all significant sideslope and downslope boundaries of the construction area. The discharger must consider site-specific and seasonal conditions when designing the control practices.

c. Control practices to reduce the tracking of sediment onto public or private roads. These public and private roads shall be inspected and cleaned as necessary.

d. Control practices to reduce wind erosion.

7. Non-Storm Water Management

The SWPPP shall include provisions which eliminate or reduce to the extent feasible the discharge of materials other than storm water to the storm sewer system and/or receiving waters. Such provisions shall ensure, to the extent feasible, that no materials are discharged in quantities which will have an adverse effect on receiving waters. Materials other than storm water that are discharged shall be listed along with the estimated quantity of the discharged material.

8. Post-Construction Storm Water Management

The SWPPP shall describe the control practices to reduce pollutants in storm water discharges after all construction phases have been completed at the site. These must be consistent with all local post-construction storm water management requirements, policies, and guidelines. The discharger must consider site-specific and seasonal conditions when designing the control practices. Operation and maintenance of control practices after construction is completed shall be addressed, including short- and long-term funding sources and the responsible party.

9. Waste Management and Disposal

All wastes (including equipment maintenance waste) disposed at the site or removed from the site for disposal shall be disposed of in compliance with Federal, State, and local laws, regulations, and ordinances.

10. Maintenance, Inspection, and Repair

The SWPPP shall include maintenance, inspections, and repair procedures to ensure that all grade surfaces, walls, dams and structures, vegetation, erosion and sediment control measures, and other protective devices identified in the site plan are maintained in good and effective condition and are promptly repaired or restored.

11. Training

The SWPPP shall include procedures to ensure that all inspections required in Section B.4 of the Monitoring Program and Reporting Requirements of this general permit and maintenance and repair required in Paragraph 10 of this Section are done by trained personnel.

12. List of Contractors/Subcontractors

The SWPPP shall include a list of all contractors (or subcontractors) responsible for implementing the SWPPP.

13. Other Plans

This SWPPP may incorporate, by reference, the appropriate elements of other plans required by local, State, or Federal agencies. A copy of any requirements incorporated by reference shall be kept at the construction site.

14. Public Access

The SWPPP is considered a report that shall be available to the public under Section 308(b) of the CWA. Upon request by members of the public, the discharger shall make available for review a copy of the SWPPP either to the Regional Water Board or directly to the requestor.

15. Preparer

The SWPPP shall include the signature and title of the person responsible for preparation of the SWPPP and include the date of initial preparation and each amendment, thereto.

Section B: MONITORING PROGRAM AND REPORTING REQUIREMENTS

1. General

Dischargers are required to conduct inspections before and after storm events and to annually certify that they are in compliance with the general permit and their SWPPP. Other than reporting incidents of noncompliance, dischargers are not required to submit reports or certifications.

2. Required Changes

The Regional Water Board may require the discharger to conduct additional site inspections, submit reports and certifications, or to perform sampling and analysis.

3. Implementation

a. The requirements of this Section shall be implemented by October 1, 1992 or commencement of the construction activity. The discharger is responsible for implementing these requirements until construction activity is complete.

b. For ongoing construction activity involving a change in ownership of property covered by this general permit, the new owner must implement the requirements of this Section concurrent with the change of ownership.

4. Site Inspections

Dischargers shall conduct inspections of the construction site prior to anticipated storm events and after actual storm events to identify areas contributing to a discharge of storm water associated with construction activity and to evaluate whether control practices to reduce pollutant loadings identified in the SWPPP are adequate and properly implemented in accordance with the terms of the general permit or whether additional control practices are needed. A record of the inspections must include the date of the inspection, the individual(s) who performed the inspection, and the observations.

5. Compliance Certification

Each discharger must annually certify that its construction activity is in compliance with the requirements of this general permit and its SWPPP. This certification should be based upon the site inspections required in Paragraph 4 of this Section. The first certification must be completed by July 1, 1993, and each July 1 thereafter.

6. Noncompliance Reporting

Dischargers who cannot certify compliance, in accordance with Paragraph 5 of this Section and/or who have had other instances of noncompliance, must notify the appropriate Regional Water Board. The notifications shall identify the type(s) of noncompliance, describe the actions necessary to achieve compliance, and include a time schedule, subject to the modifications by the Regional Water Board, indicating when compliance will be achieved. Noncompliance notifications must be submitted within 30 days of identification of noncompliance.

7. Monitoring Records

Records of all inspections, compliance certifications, and noncompliance reporting must be retained for a period of at least three years. With the exception of noncompliance reporting, dischargers are not required to submit these records.

Section C: STANDARD PROVISIONS FOR CONSTRUCTION ACTIVITY

1. Duty to Comply

The discharger must comply with all of the conditions of this general permit. Any permit noncompliance constitutes a violation of the CWA and the Porter-Cologne Water Quality Control Act and is grounds for enforcement action and/or removal from general permit coverage.

The discharger shall comply with effluent standards or prohibitions established under Section 307(a) of the CWA for toxic pollutants within the time provided in the regulations that establish these standards or prohibitions, even if this general permit has not yet been modified to incorporate the requirement.

2. General Permit Actions

This general permit may be modified, revoked and reissued, or terminated for cause. The filing of a request by the discharger for a general permit modification, revocation and reissuance, or termination, or a notification of planned changes or anticipated noncompliance does not stay any general permit condition.

If any toxic effluent standard or prohibition (including any schedule of compliance specified in such effluent standard or prohibition) is promulgated under Section 307(a) of the Clean Water Act for a toxic pollutant which is present in the discharge and that standard or prohibition is more stringent than any limitation on the pollutant in this general permit, this general permit shall be modified or revoked and reissued to conform to the toxic effluent standard or prohibition; and the dischargers so notified.

3. Need to Halt or Reduce Activity Not a Defense

It shall not be a defense for a discharger in an enforcement action that it would have been necessary to halt or reduce the permitted activity in order to maintain compliance with the conditions of this general permit.

4. Duty to Mitigate

The discharger shall take all responsible steps to minimize or prevent any discharge in violation of this general permit which has a reasonable likelihood of adversely affecting human health or the environment.

5. Proper Operation and Maintenance

The discharger shall at all times properly operate and maintain any facilities and systems of treatment and control (and related appurtenances) which are installed or used by the discharger to achieve compliance with the conditions of this general permit and with the requirements of storm water pollution prevention plans. Proper operation and maintenance also includes adequate laboratory controls and appropriate quality assurance procedures. Proper operation and maintenance may require the operation of backup or auxiliary facilities or similar systems, installed by a discharger when necessary to achieve compliance with the conditions of this general permit.

6. Property Rights

This general permit does not convey any property rights of any sort, or any exclusive privileges, nor does it authorize any injury to private property or any invasion of personal rights, nor any infringement of Federal, State, or local laws or regulations.

7. Duty to Provide Information

The discharger shall furnish the Regional Water Board, State Water Board, or USEPA, within a reasonable time, any requested information to determine compliance with this general permit. The discharger shall also furnish, upon request, copies of records required to be kept by this general permit.

8. Inspection and Entry

The discharger shall allow the Regional Water Board, State Water Board, USEPA, and/or, in the case of construction sites which discharge through a municipal separate storm sewer, an authorized representative of the municipal operator of the separate storm sewer system receiving the discharge, upon the presentation of credentials and other documents as may be required by law, to:

a. Enter upon the discharger's premises at reasonable times where a regulated construction activity is being conducted or where records must be kept under the conditions of this general permit;

b. Have access to and copy at reasonable times, any records that must be kept under the conditions of this general permit;

c. Inspect at reasonable times the construction site and the related erosion/sediment controls; and

d. Sample or monitor at reasonable times for the purpose of ensuring general permit compliance.

9. Signatory Requirements

a. All Notices of Intent submitted to the State Water Board shall be signed as follows:

1. For a corporation: by a responsible corporate officer. For the purpose of this section, a responsible corporate officer means: (a) a president, secretary, treasurer, or vice president of the corporation in charge of a principal business function, or any other person who performs similar policy or decision-making functions for the corporation, or (b) the manager of the construction activity if authority to sign documents has been assigned or delegated to the manager in accordance with corporate procedures;

2. For a partnership or sole proprietorship: by a general partner or the proprietor, respectively; or

3. For a municipality, State, Federal, or other public agency: by either a principal executive officer, ranking elected official, or duly authorized representative. The principal executive officer of a Federal agency includes the chief executive officer of the agency or the senior executive officer having responsibility for the overall operations of a principal geographic unit of the agency (e.g., Regional Administrators of USEPA).

b. All storm water pollution prevention plans, reports, certifications, or other information required by the general permit and/or requested by the Regional Water Board, State Water Board, USEPA, or the local storm water management agency shall be signed by a person described above or by a duly authorized representative. A person is a duly authorized representative if:

1. The authorization is made in writing by a person described above and retained as part of the SWPPP;

2. The authorization specifies either an individual or a position having responsibility for the overall operation of the construction activity, such as the position of manager, operator, superintendent, or position of equivalent responsibility or an individual or position having overall responsibility for environmental matters for the company. (A duly authorized representative may thus be either a named individual or any individual occupying a named position.); and

3. If an authorization is no longer accurate because a different individual or position has responsibility for the overall operation of the construction activity, a new authorization must be attached to the SWPPP prior to submittal of any reports, information, or certifications to be signed by the authorized representative.

10. Certification

Any person signing documents under Provision 8 shall make the following certification:

"I certify under penalty of law that this document and all attachments were prepared under my direction or supervision in accordance with a system designed to assure that qualified personnel properly gather and evaluate the information submitted. Based on my inquiry of the person or persons who manage the system or those persons directly responsible for gathering the information, the information submitted is to the best of my knowledge and belief, true, accurate, and complete. I am aware that there are significant penalties for submitting false information, including the possibility of fine and imprisonment for knowing violations."

11. Anticipated Noncompliance

The discharger will give advance notice to the Regional Water Board and local storm water management agency of any planned changes in the construction activity which may result in noncompliance with general permit requirements.

12. Penalties for Falsification of Reports.

Section 309(c)(4) of the CWA provides that any person who knowingly makes any false material statement, representation, or certification in any record or other document submitted or required to be maintained under this general permit, including reports of compliance or noncompliance shall, upon conviction, be punished by a fine of not more than $10,000 or by imprisonment for not more than two years or by both.

13. Oil and Hazardous Substance Liability

Nothing in this general permit shall be construed to preclude the institution of any legal action or relieve the discharger from any responsibilities, liabilities, or penalties to which the discharger is or may be subject under Section 311 of the CWA.

14. Severability

The provisions of this general permit are severable, and, if any provision of this general permit or the application of any provision of this general permit to any circumstance is held invalid, the application of such provision to other circumstances and the remainder of this general permit shall not be affected thereby.

15. Reopener Clause

This general permit may be modified, revoked and reissued, or terminated for cause due to promulgation of amended regulations, receipt of USEPA guidance concerning regulated activities, judicial decision, or in accordance with 40 CFR 122.62, 122.63, 122.64, and 124.5.

16. Penalties for Violations of Permit Conditions

a. Section 309 of the CWA provides significant penalties for any person who violates a permit condition implementing Sections 301, 302, 306, 307, 308, 318, or 405 of the CWA or any permit condition or limitation implementing any such section in a permit issued under Section 402. Any person who violates any permit condition of this general permit is subject to a civil penalty not to exceed $25,000 per day of such violation, as well as any other appropriate sanction provided by Section 309 of the CWA.

b. The Porter-Cologne Water Quality Control Act also provides for civil and criminal penalties which in some cases are greater than those under the CWA.

17. Availability

A copy of this general permit shall be maintained at the construction site during construction activity and be available to operating personnel.

18. Transfers

This general permit is not transferable. A new owner of an ongoing construction activity must submit a NOI in accordance with the requirements of this general permit to be authorized to discharge under this general permit. An owner who sells property covered by this general permit shall inform the new owner of the duty to file a NOI and shall provide the new owner with a copy of this general permit.

19. Continuation of Expired Permit

This general permit continues in force and effect until a new general permit is issued or the State Water Board rescinds this general permit. Only those dischargers authorized to discharge under the expiring general permit are covered by the continued general permit.

STATE WATER RESOURCES CONTROL BOARD

P. O. Box 100, Sacramento, CA 95812-0100
Legislative and Public Affairs: (916)657-2390
Clean Water Programs Information: (916) 739-4400
Water Quality Information: (916) 657-0687
Water Rights Information: (916) 657-2170

CALIFORNIA REGIONAL WATER QUALITY CONTROL BOARDS

NORTH COAST REGION (1)

5550 Skylane Blvd. Suite A
Santa Rosa, CA 95403
(707) 576-2220

SAN FRANCISCO BAY REGION (2)

2101 Webster Street, Ste. 500
Oakland, CA 94612
(510) 464-1255

CENTRAL COAST REGION (3)

81 Higuera St., Suite 200
San Luis Obispo, CA 93401-5414
(805) 549-3147

LOS ANGELES REGION (4)

101 Centre Plaza Drive
Monterey Park, CA 91754-2156
(213) 266-7500

CENTRAL VALLEY REGION (5)

3443 Routier Road, Suite A
Sacramento, CA 95827-3098
(916) 361-5600

Fresno Branch Office

3614 East Ashlan Ave.
Fresno, CA 93726
(209) 445-5116

Redding Branch Office

415 Knollcrest Drive
Redding, CA 96002
(916) 224-4845

LAHONTAN REGION (6)

2092 Lake Tahoe Boulevard, Suite 2
South Lake Tahoe, CA 96150
(916) 544-3481

Victorville Branch Office

Civic Plaza,
15428 Civic Drive, Suite 100
Victorville, CA 92392-2359
(619) 241-6583

COLORADO RIVER BASIN REGION (7)

73-720 Fred Waring Drive, Suite 100
Palm Desert, CA 92260
(619) 346-7491

SANTA ANA REGION (8)

2010 Iowa Avenue, Suite 100
Riverside, CA 92507-2409
(714) 782-4130

SAN DIEGO REGION (9)

9771 Clairemont Mesa Blvd. Ste. B
San Diego, CA 92124
(619) 467-2952

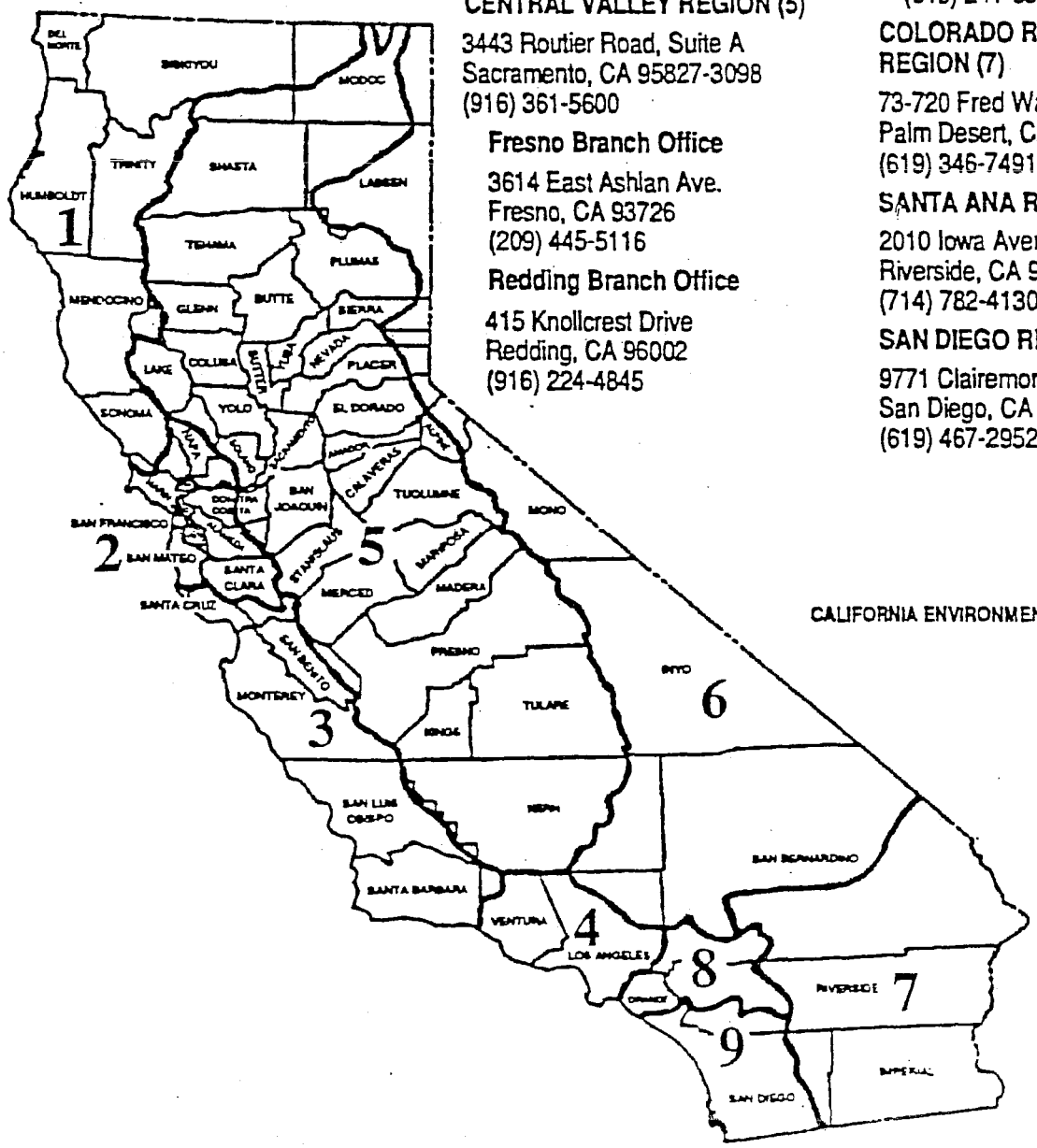

STATE OF CALIFORNIA
Pete Wilson, Governor

CALIFORNIA ENVIRONMENTAL PROTECTION AGENCY
James M. Strock, Secretary

NOTICE OF INTENT (NOI) TO COMPLY WITH THE TERMS OF THE GENERAL PERMIT TO DISCHARGE STORM WATER ASSOCIATED WITH CONSTRUCTION ACTIVITY

GENERAL INSTRUCTIONS

Who Must Submit

Discharges of storm water associated with construction activity (storm water discharges) that results in the disturbance of five acres or more of total land area or which is part of a larger common area of development or sale must be permitted. Construction activity includes clearing, grading, excavation, and reconstruction of existing facilities involving removal and replacement. Construction activity does not include routine maintenance to maintain original line and grade, hydraulic capacity, or original purpose of the facility.

The owner of the land where the construction activity is occurring is responsible for obtaining a permit. Owners may obtain coverage under the General Storm Water Permit to Discharge Storm Water Associated with Construction Activity (General Permit) by filing a NOI in accordance with the following instructions. Coverage for construction activity conducted on easements (e.g., pipeline construction), or on nearby properties by agreement or permission, shall be obtained by the entity responsible for the construction activity.

Construction Activities Not Covered by This General Permit

Storm water discharges in the Lake Tahoe Hydrologic Unit will be regulated by a separate permit(s) adopted by the California Regional Water Quality Control Board, Lahonton Region, and may not seek coverage under the State Water Board's general permit. Storm water discharges on Indian lands will be regulated by the U.S. Environmental Protection Agency.

Where to Apply

The NOI should be mailed to the State Water Resources Control Board at the following address:

State Water Resources Control Board
Division of Water Quality
Attn: Storm Water Permit Unit
P.O. Box 1977
Sacramento, CA 95812-1977

When to Apply

Owners of ongoing construction must file a NOI, along with the appropriate annual fee, by September 30, 1992. Owners of new construction (those beginning construction after September 30, 1992) must file a NOI prior to the commencement of construction. For ongoing construction activity involving a change of ownership, the new owner must submit a new NOI within 30 days of the date of change of ownership. Preferably, the NOI should be sent with the revocation prepared by the previous owner.

Fees

The current annual fee is $250.00 for each construction site which discharges into a municipal separate storm sewer system regulated by an areawide urban storm water permit and $500.00 for all other construction sites.

Completing the NOI

Completion and submittal of the attached NOI (Form NOI-2) is required to gain coverage under the general permit. It must be completely and accurately filled out. A construction site will be considered to be covered by the general permit upon filing a complete and accurate NOI and submitting the appropriate annual fee. Upon receipt of the NOI and fee, each discharger will be sent a letter containing the discharger's identification number.

Questions?

If you have any questions on completing the NOI after reading the following line-by-line instructions, please call us at (916) 657-1146.

NOI— BY LINE INSTRUCTIONS

The NOI consists of two parts--a NOI Form (Form NOI-2) and a site map. Please type or print when completing the NOI Form and site map.

Mark one of the three boxes at the top portion of the NOI. Check box 1 if the NOI is being completed for ongoing construction, box 2 if the construction site is new (commencing on or after October 1, 1992), and box 3 if the NOI is being submitted to report changes for a construction site already covered by the general permit. An example of a change that warrants a resubmittal of the NOI would be a change of ownership of the construction site. Complete only those portions of the NOI that apply to the changes (the NOI must always be signed). If box 3 is checked, the WDID No. must be included.

SECTION I—OWNER

Enter the owner of the construction site's official or legal name, address, contact person, and contact person's title and telephone number.

SECTION II—CONSTRUCTION SITE INFORMATION

In Part A, enter the name of the developer (or general contractor), official, or legal name, address, contact person, and contact person's title and telephone number. The contact person should be the construction site manager completely familiar with the construction site and charged with compliance and oversight of the general permit.

In Part B, enter the address, county, and telephone number (if any) of the construction site. Construction sites that do not have a street address must attach to the NOI a legal description of the construction site.

In Part C, indicate whether the construction site is part of a larger common plan of development or sale. For example, indicate yes if the construction activity is occuring on a two-acre site within an industrial park development of greater than five acres. If the construction site is part of a larger common plan of development or sale, name the common plan (e.g., XYZ Estates, ABC Industrial Park).

In Part D, indicate the construction commencement date (month, day, year). When there is a change in ownership of the property that requires a new NOI, the construction commencement date should be the date of the change in ownership.

In Part E, indicate when the construction is expected to be completed.

SECTION III—BILLING ADDRESS

To continue coverage under the general permit, the annual fee must be paid. Use this section to indicate whether the annual fee invoices should be sent to the owner, developer, or other party (include address).

SECTION IV—RECEIVING WATER INFORMATION

In Part A of this section, the owner is required to indicate whether the construction site's storm water runoff discharges to a separate storm sewer system, directly to waters of the United States, or indirectly to waters of the United States.

Discharges to separate storm sewer systems are those that discharge to a collection system operated by municipalities, flood control districts, utilities, or similar entities. Storm water discharges directly to waters of the United States will typically have an outfall structure directly from the facility to a river, creek, ocean, etc. Indirect discharges are those that may flow over adjacent properties or rights-of-way prior to discharging to waters of the United States.

Regardless of point of discharge, the owner must determine the closest receiving water for the construction site's storm water discharge. If discharge is to a separate storm sewer system, the owner of that system should know the receiving water. The name of the receiving water of a direct discharge should be easily available while the receiving water of an indirect discharge may require some effort to identify.

SECTION V—TYPE OF CONSTRUCTION

Indicate the type of construction taking place. Transportation should be checked for the construction of roads. Utility should be checked for installation of sewer, electric, and telephone systems.

SECTION VI—MATERIAL HANDLING/MANAGEMENT PRACTICES

Part A of this section requires identification of the type(s) of materials stored and handled outdoors. If materials other than those listed are maintained on site, please check "other" and describe the type of material.

Part B of this section requests information on proposed management practices to reduce pollutants in storm water discharges. Check the appropriate categories or list other control measures you will use at your construction site.

SECTION VII—SITE INFORMATION

List the size, in acres, of the facility and the percentage of the site that is impervious before construction and after construction is completed.

SECTION VIII—REGULATORY STATUS

Indicate whether the construction site's erosion/sediment control plan must be reviewed and approved by a local agency. If yes, identify the name of the local agency.

SECTION IX--CERTIFICATION

This section must be completed by the owner of the construction site. The certification provides for assurances that the NOI and site map were completed in an accurate and complete fashion and with the knowledge that penalties exist for providing false information. It also requires the owner to certify that the provisions in the general permit will be complied with.

The NOI must be signed by:

For a corporation: a responsible corporate officer (or authorized individual).
For a partnership or sole proprietorship: a general partner or the proprietor, respectively.
For a municipality, State, Federal, or other public agency: either a principal executive officer, ranking elected official, or duly authorized representative.

SITE MAP

Provide a "to scale" drawing of the construction site and its immediate surroundings. Include as much detail about the construction site as possible. At a minimum, show existing and proposed buildings, roadways, storm water collection and discharge points, a north arrow, and the names of adjacent streets.

State Water Resources Control Board

NOTICE OF INTENT

TO COMPLY WITH THE TERMS OF THE
GENERAL PERMIT TO DISCHARGE STORM WATER
ASSOCIATED WITH CONSTRUCTION ACTIVITY (WQ Order No. 92-08-DWQ)

MARK ONLY ONE ITEM	1. ☐ Ongoing Construction 2. ☐ New Construction	3. ☐ Change of Information WDID # _____

I. OWNER

Name			Contact Person
Local Mailing Address			Title
City	State	Zip	Phone

II. CONSTRUCTION SITE INFORMATION

A. Developer			Contact Person
Local Mailing Address			Title
City	State	Zip	Phone
B. Site Address			County
City	State CA	Zip	Phone

C. Is the construction site part of a larger common plan of development or sale ? ☐ Yes ☐ No

If yes, name of plan or development

D. Construction commencement date M M D D Y Y

E. Projected construction completion date M M D D Y Y

III. BILLING ADDRESS

Send to:

☐ OWNER ☐ DEVELOPER

☐ OTHER *(Enter information at right)*

Name		
Mailing Address		
City	State	Zip

IV. RECEIVING WATER INFORMATION

A. Does your construction site's storm water discharge to: (Check one)

1. ☐ Storm drain system - Enter system owners name
2. ☐ Directly to waters of U.S. (e.g., river, lake, creek, ocean)
3. ☐ Indirectly to waters of U.S.

B. Name of closest receiving water

STATE USE ONLY

WDID:	Regional Board Office:	Date Permit Issued:

NPDES Permit Number:	Order Number:	Fee Amount Received:	Date NOI Received:
CA _____	_____	$ _____	_____

V. TYPE OF CONSTRUCTION (Check all that apply)

1. ☐ Residential 2. ☐ Commercial 3. ☐ Industrial 4. ☐ Reconstruction 5. ☐ Transportation

6. ☐ Utility 99. ☐ Other (Please List)

VI. MATERIAL HANDLING/MANAGEMENT PRACTICES

A. Types of materials that will be handled and/or stored at the site: (Check all that apply)

1. ☐ Solvents 2. ☐ Metal 3. ☐ Petroleum Products 4. ☐ Plated Products

5. ☐ Asphalt/Concrete 6. ☐ Hazardous Substances 7. ☐ Paints 8. ☐ Wood Treated Products

99. ☐ Other (Please list)

B. Identify proposed management practices to reduce pollutants in storm water discharges: (Check all that apply)

1. ☐ Oil/Water Separator 2. ☐ Erosion Controls 3. ☐ Sedimentation Controls 4. ☐ Overhead Coverage

5. ☐ Detention/Desiltation Pond 99. ☐ Other (Please list)

VII. SITE INFORMATION

A. Total size of construction site:

_____ Acres

B. Percent of site impervious: (Including rooftops)

Before construction _____ % After construction _____ %

VIII. REGULATORY STATUS

Is the site subject to a locally approved erosion/sediment control plan ? ☐ Yes ☐ No

If yes, name of local agency

IX. CERTIFICATION

I certify under penalty of law that this document and all attachments were prepared under my direction and supervision in accordance with a system designed to assure that qualified personnel properly gather and evaluate the information submitted. Based on my inquiry of the person or persons who manage the system, or those persons directly responsible for gathering the information, the information submitted is, to the best of my knowledge and belief, true accurate, and complete. I am aware that there are significant penalties for submitting false information, including the possibility of fine and imprisonment. In addition, I certify that the provisions of the permit, including the development and implementation of a Storm Water Pollution Prevention Plan and a Monitoring Program Plan, will be complied with.

Printed Name: _____

Signature: _____ Date: _____

Title: _____

DEFINITIONS

1. "Best Management Practices" ("BMPs") means schedules of activities, prohibitions of practices, maintenance procedures, and other management practices to prevent or reduce the pollution of waters of the United States. BMPs also include treatment requirements, operating procedures, and practices to control site runoff, spillage or leaks, waste disposal, or drainage from raw material storage.

2. "Clean Water Act" ("CWA") means the Federal Water Pollution Control Act enacted by Public Law 92-500 as amended by Public Laws 95-217, 95-576, 96-483, and 97-117; 33 USC. 1251 et seq.

3. "Construction Site" is the location of the construction activity.

4. "Non-Storm Water Discharge" means any discharge to storm sewer systems that is not composed entirely of storm water except discharges pursuant to a NPDES Permit and discharges resulting from fire fighting activities.

5. "Significant Materials" includes, but is not limited to: raw materials; fuels; materials such as solvents, detergents, and plastic pellets; finished materials such as metallic products; raw materials used in food processing or production; hazardous substances designated under Section 101(14) of Comprehensive Environmental Response, Compensation, and Liability Act (CERLCA); any chemical the facility is required to report pursuant to Section 313 of Title III of Superfund Amendments and Reauthorization Act (SARA); fertilizers; pesticides; and waste products such as ashes, slag, and sludge that have the potential to be released with storm water discharges.

6. "Significant Quantities" is the volume, concentrations, or mass of a pollutant in storm water discharge that can cause or threaten to cause pollution, contamination, or nuisance; adversely impact human health or the environment; and cause or contribute to a violation of any applicable water quality standards for the receiving water.

7. "Storm Water" means storm water runoff, snow melt runoff, and surface runoff and drainage. It excludes infiltration and runoff from agricultural land.

8. "Pollution" means "the man-made or man-induced alternation of the chemical, physical, biological, and radiological integrity of water". [Clean Water Act Section 502(19)]. Pollution also means "an alternation of the quality of the waters of the state by waste to a degree which unreasonably affects either...the waters for beneficial uses...or facilities which serve these beneficial uses." [California Water Code Section 13050(l)]

9. "Contamination" means "an impairment of the quality of the waters of the state by waste to a degree which creates a hazard to the public health through poisoning or through the spread of disease ... including any equivalent effect resulting from the disposal of waste, whether or not waters of the state are affected." [California Water Code Section 13050(k)]

10. "Nuisance" means "anything which meets all of the following requirements: (1) is injurious to health, or is indecent or offensive to the senses, or an obstruction to the free use of property, so as to interfere with the comfortable enjoyment of life and property; (2) affects at the same time an entire community or neighborhood, or any considerable number of persons, although the extent of the annoyance or damage inflicted upon individuals may be unequal; (3) occurs during or as a result of the treatment or disposal of wastes." [California Water Code Section 13050(m)]

11. "Local Agency" means any agency that is involved with providing review, approval, or oversight of the construction sites' (a) construction activity, (b) erosion and sediment controls, or (c) storm water discharge.

APPENDIX B

SAMPLE STORM WATER POLLUTION PREVENTION PLAN

APPENDIX B

EXAMPLE SWPPP FOR A CONSTRUCTION PROJECT

This Appendix gives an example of a storm water pollution prevention plan (SWPPP) for a relatively straight forward, short-term construction project. It uses the SWPPP worksheets found at the end of Chapter 2. The level of detail provided is appropriate for projects in California of similar size and complexity. The BMPs selected for this example are appropriate for the example problem only -- other projects/sites will typically require a unique set of BMPs tailored to the particular site conditions. It may be useful to include additional working site maps and/or other materials used for selecting appropriate BMPS, such as those discussed in Chapters 2 and 3, for background. These materials are not required in the SWPPP, however, and are not included here. Also, a project location map and complete set of BMP fact sheets are not included in this example, but should be part of a complete SWPPP.

It is impossible to cover the full range of construction projects within California with a single example. Long-term, complex construction projects will probably require additional information to supplement the SWPPP worksheet, or may require phased SWPPPs for each construction phase. The concepts and level of detail shown in this example should be used only as a guide for preparing an SWPPP.

REVISIONS	DATE

NOI attached?
[ ] Yes
[✓] No

Storm Water Pollution Prevention Plan (SWPPP) Worksheet
California Construction General Permit

Worksheet 1. Project Information

Project Name: NOI WAREHOUSE

Project Location: Street Address (or Equivalent): 461 MAJOR ROAD

City: ANYTOWN County: CONTRA PERMIT Zip Code: 99999

Project Owner: NOI PACKAGING, INC.

Contact Person: S.W. RUNOFF Phone No. (213) 555-1212

Owner's Mailing Address: Street Address (or Equivalent): 999 INDUSTRY BLVD.

City: ANYTOWN County: CONTRA PERMIT Zip Code: 99999

[✓] Identify responsible personnel:

[✓] Implementing and revising the SWPPP: S.W. RUNOFF

[✓] Inspecting equipment: M. POOL

[✓] Regular inspections of BMPs: I. C. PROBLEMS

[✓] Training employees about BMPs affecting their job: U. C. FIXES

List all Contractors and Subcontractors responsible for implementing SWPPP for the project:

NAME	CONTACT PERSON	DATE WORK BEGINS	DATE WORK ENDS
ABC General Contractor	Geo. Foreman	10/15/92	9/1/93
XYZ Electric	U. R. Sparks	3/10/93	6/10/93
DEF Mechanical	C. R. Gear	2/1/93	7/1/93
Dirt Excavation	E. Mover	10/15/92	12/1/92
Flowers Landscaping	Fred Flowers	7/1/93	9/1/93

Worksheet 2. Project Site Map Requirements

Please Check the Boxes, and provide supporting information as requested:

[✓] Topographic Base Map Attached? Map shows:

- [✓] An area extending one-quarter mile beyond the property boundaries of the construction site: **See Location Map on Project Construction Drawings.**
- [✓] The boundary of the construction site. Construction Area = __12__ Acres
- [✓] Nearby surface water bodies, including water courses, wetlands, springs and wells.
- [✓] The location(s) where storm water drains onto or off of the property.
- [✓] Boundary of off-site areas that drain into the construction site.

[✓] Site map(s) attached? Maps show:

- [✓] Temporary storm water structures used during construction.
- [✓] Areas used to store soils and construction waste.
- [✓] Areas of cut and fill.
- [✓] Drainage patterns and slopes anticipated after major grading activities, including the location of storm water structures to be constructed on the property (e.g., storm drains, detention ponds, channels).
- [✓] Areas of soil disturbance.
- [✓] Locations of potential soil erosion requiring BMPs during construction.
- [✓] Existing and proposed paved areas and buildings.

  Existing Area: __0__ percent of site Proposed Area: __70__ percent of site

- [✓] Estimated runoff coefficient before construction: __35__ after construction __78__
  (See the local municipality for approved runoff coefficients for your community.)
- [✓] Locations where storm water structures and controls will be built to control storm water pollution after construction is complete.
- [✓] The boundary of the drainage area upstream of each location where storm water leaves the property. **See Hydrology Report for Project, Page 25.**
- [✓] Any vehicles storage and service areas. NONE
- [✓] Areas of existing vegetation.

Worksheet 3. Inventory of Contractor's Activities and Special Site Conditions

Provide a description of contractor's activities that could result in the discharge of pollutants in the storm water runoff from the site. In addition, provide a description of special site conditions that may impact pollutants in storm water discharges.

Contractor's Activities

[✓] Describe toxic materials that are known to have been stored, disposed, spilled, or leaked in significant quantities onto the construction site:
No toxic materials were stored, disposed, spilled or leaked on-site prior to construction.

[✓] Describe construction materials, equipment and vehicles that comes in contact with storm water:
Construction Materials: Concrete, structural steel, aluminum wall panels, asphalt roofing, shrubbery, fertilizer, corrugated metal drainage pipe.
Equipment & Vehicles: Bulldozer, grader, concrete truck/forming, welder.

[✓] Describe construction material loading, unloading and access areas/activities:
All construction materials will be delivered to and stored on pallets in a bermed area staging at the northwest corner of the site (except concrete and asphalt roofing, which will be used immediately upon delivery to the site.

[✓] Describe equipment storage, cleaning, and maintenance areas/activities:
Equipment will be stored off-site if not needed within a 21 day period. Equipment will be stored on-site either in the bermed staging area or inside the partially completed warehouse. Fueling and routine maintenance will take place in the bermed staging area. Major equipment overhauls will take place off-site.

[✓] Describe storage and disposal of construction materials (on-site and off-site):
Materials will be stored on pallets in a bermed staging area until installation, and will be installed within 72 hours after removing from the bermed staging area. Building material waste will be placed nightly in dumpsters in the waste containment areas which will be emptied weekly. Excess concrete and asphalt roofing materials will be taken to approved off-site disposal areas.

Special Site Conditions

[✓] Describe storm water structures and controls on the site prior to construction and how these structures/controls will be integrated into the SWPPP to reduce sediment and other pollutants in storm water discharges:
No structures/controls existed on-site prior to construction.

[✓] List materials/waters other than storm water which will flow from the site during dry weather, the approximate amount of flow, and methods for preventing other dry weather flows:
No dry weather flows/discharges will be generated on-site by this construction project.

Worksheet 4. BMPs for Contractor Activities

Provide a list of BMPs selected to reduce pollutants associated with contractor activities (see Worksheet 3). For each BMP selected, identify the pollution(s) of concern (see Table 1.1). Attach modified BMP fact sheets and/or appropriate information for the BMP selected. (See Chapter 4, BMPs for Contract or Activities.)

Contractor Activities (Worksheet 3)	Construction Practices			Materials Management			Waste Management					Vehicle & Equipment Management			Primary Pollutant(s) of Concern
	CA1	CA2	CA3	CA10	CA11	CA12	CA20	CA21	CA22	CA23	CA24	CA30	CA31	CA32	
1. Toxic material on-site															
2. Construction material equipment & vehicles in contact with storm water		✓	✓		✓								✓	✓	See Worksheet 3
3. Material loading, unloading and access areas/activities				✓		✓									Various Building Materials (Floatables)
4. Equipment storage cleaning, and maintenance areas/activities													✓	✓	Fuels, Oil, Grease, Hydraulic Fluids
5. Storage and disposal of construction materials (on-site and off-site)							✓			✓	✓				Various Building Materials (Floatables), Concrete, Asphalt

NOTE: Modified BMP Fact Sheet CA10 is included as an example. The Complete SWPPP would include other modified BMP Fact Sheets.

Worksheet 5. BMPs for Erosion and Sedimentation Control

[ ] Describe the source and composition of the existing soil and fill material
(Soil Report Attached? Yes [ ] No [✓])
No significant fill materials are needed for this project. Only native soils available on-site will be used. The native soil is a loamy clay. Temporary stock piles will be created during construction.

[ ] Provide a site map showing locations where BMPs for erosion and sediment control are placed. This map should be updated when BMPs are revised to meet evolving construction conditions. Provide a brief description of BMP selected, and, if appropriate, attach modified fact sheets or additional information for erosion and sedimentation control BMPs.

✓	BMPs SELECTED	DESCRIPTION OF BMPs FOR EROSION & SEDIMENTATION CONTROL
SITE PLANNING CONSIDERATIONS		
	Scheduling	
✓	Preservation of Existing Vegetation	**Existing tree, vegetation along Minor Creek**
SOIL STABILIZATION		
✓	Seeding and Planting	**Final site stabilization of slopes, site periphery**
	Mulching	
PHYSICAL STABILIZATION		
	Geotextiles and Mats	
	Dust Control	
	Temporary Stream Crossing	
	Construction Road Stabilization	
✓	Stabilized Construction Entrance	**Perimeter Control: vehicular sediment tracking onto major road**
DIVERSION OF RUNOFF		
	Earth Dike	
✓	Temporary Drains and Swales	**Intercept, collect flows to prevent slope erosion**
✓	Slope Drain	**Slope Protection: convey runoff from top to toe of slope**

✓	BMPs SELECTED	DESCRIPTION OF BMPs FOR EROSION & SEDIMENTATION CONTROL
VELOCITY REDUCTION		
✓	Outlet Protection	**Prevent stream erosion from high velocities at pipe outlets**
	Check Dams	
	Slope Roughing/Terracing	
SEDIMENT TRAPPING/FILTERING		
✓	Silt Fence	**Trap sediment along Minor Creek**
	Straw Bale Barrier	
	Sand Bag Barrier	
	Rock or Brush Filter	
✓	Storm Drain Inlet Protection	**Prevent sediment from entering new D.I.'s**
	Sediment Trap	
✓	Sediment Basin	**Sedimentation for most site runoff before discharge to Minor Creek**

Worksheet 6. Post-Construction BMPs

Provide a site map locating treatment control BMPs which will be constructed as part of this project to reduce storm water pollution after construction is complete. Selection of these and other post-construction BMPs may be guided using the Municipal BMP Handbook, and must consider site-specific and seasonal conditions. Provide on the worksheet below the BMP selected, the responsible party for maintenance and operation, and source for funding the operation and maintenance.

✓	BMPs SELECTED	MAINTENANCE RESPONSIBILITY	FUNDING SOURCE FOR O&M
	TREATMENT CONTROL BMPs		
	Infiltration		
	Wet Ponds		
	Constructed Wetlands		
	Vegetated Swales and Strips		
✓	Extended Detention Basins **(To be constructed where sediment basin is located during construction.)**	**NOI Packaging will contract for maintenance services annually**	**NOI Packaging will pay for all maintenance costs**
	Media Filtration		
	Oil/Water Separators and Water Quality Inlets		
	Multiple Systems		
	SOURCE CONTROL BMPs		
✓	**Inlet Stencilling/Employee Education**	**Anytown O&M crews will stencil and provide brochure to employees**	**Restencil every 3 years, regular Anytown O&M activity**
✓	**Prevent Illicit Connections**	**Anytown City inspectors will check drains before issuing occupancy permit**	**Fee for occupancy permit covers inspection cost.**

Describe other measures which will be employed on the project site to control storm water pollution after construction is complete, and steps to be taken by the current owner to ensure that these measures are conducted.

[✓] Describe maintenance/repair efforts to ensure BMPs are in good and effective condition:

- Sediment will be removed from sedimentation basin, silt fence, and inlet protection when sediment depth reaches 1/3 of the total available depth.
- Any silt fence/inlet protection washed out or otherwise disrupted will be replaced or repaired within 48 hours of discovery.

[✓] Describe inspection procedures and record keeping efforts:

Attached inspection form to be filled out and inserted after this worksheet in the SWPPP.

[✓] Annual Inspection:

Inspection will occur about October 10, when site clearing is complete and all ESC measures are installed.

[✓] Pre-storm Inspection:

On days before predicted rainfall, a drive-by inspection will be conducted to check for any damage. Inspector will call a crew to immediately repair damage.

[✓] Post-storm Inspection:

Each BMP will be closely inspected within 48 hours after each rainfall of 0.5" or more. BMPs will be checked for 1) structural integrity; 2) sediment accumulation greater than 1/3 total depth of BMP; 3) evidence of excessive sediment downstream of the site; and 4) evidence of other construction materials washed off-site..

[✓] Describe training program/material for site personnel responsible for installing, inspecting, and maintaining BMPs:

1) **BMP fact sheets from this SWPPP will be copied and distributed to site personnel engaged in the activity in question and/or installation/maintenance of ESC BMPs.**

2) **Site inspector observing improper construction measures or pollution caused by ineffective construction pollution management practices will inform site personnel performing these practices of proper BMPs, along with special follow-up inspections for further training.**

Certification

I certify under penalty of law that this document and all attachments were prepared under my direction or supervision in accordance with a system designed to assure that qualified personnel properly gather and evaluate the information submitted. Based on my inquiry of the person or persons who manage the system or those persons directly responsible for gathering the information, the information submitted is to the best of my knowledge and belief, true, accurate, and complete. I am aware that there are significant penalties for submitting false information, including the possibility of fine and imprisonment for knowing violations.

Name S. W. Runoff Title Environmental Coordinator

Signature S. W. Runoff Date October 1, 1992

This SWPPP was prepared by:

Name S. W. Runoff Title Environmental Coordinator

Signature S. W. Runoff Date October, 1992

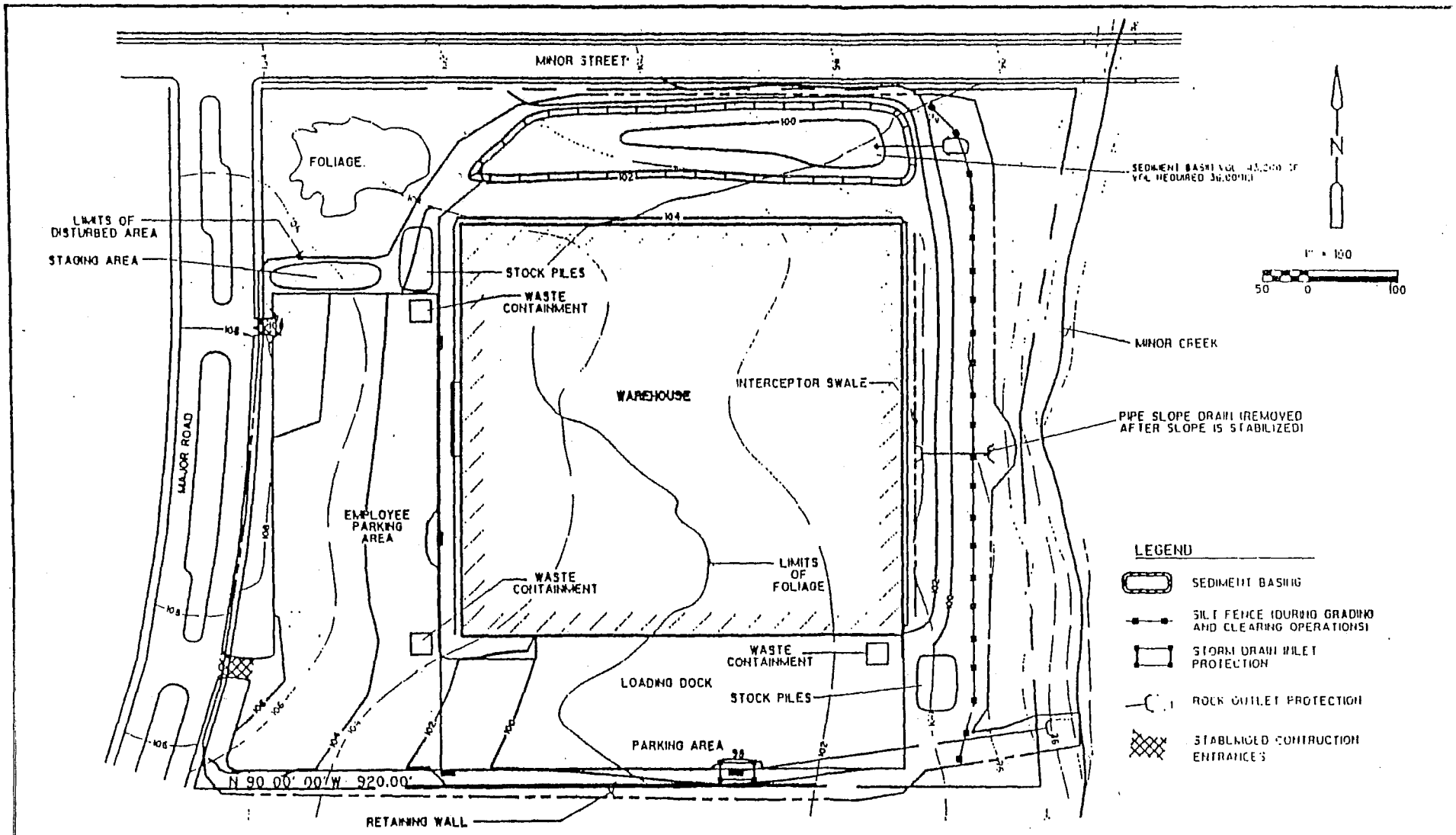

SWPPP EXAMPLE SITE MAP

ACTIVITY: MATERIAL DELIVERY AND STORAGE

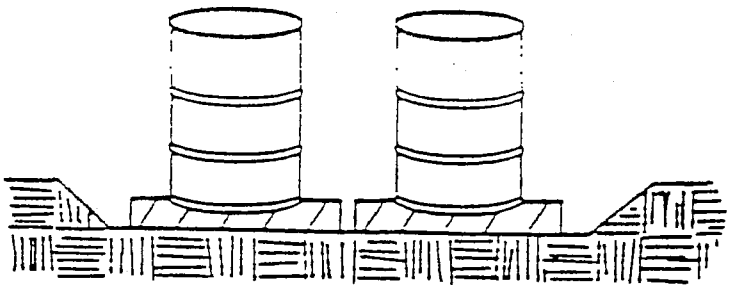

Objectives

- Housekeeping Practices
- Contain Waste
- Minimize Disturbed Areas
- Stabilize Disturbed Areas
- Protect Slopes/Channels
- Control Site Perimeter
- Control Internal Erosion

Targeted Pollutants

- ◒ Sediment
- ◒ Nutrients
- ◒ Toxic Materials
- ◒ Oil & Grease
- ◒ Floatable Materials
- ○ Other Construction Waste

● Likely to Have Significant Impact
○ Probable Low or Unknown Impact

Implementation Requirements

- ○ Capital Costs
- ○ O&M Costs
- ○ Maintenance
- ◒ Training
- ○ Suitability for Slopes >5%

● High ○ Low

SYMBOL

CA10

Best Management Practices

DESCRIPTION

Prevent or reduce the discharge of pollutants to storm water from material delivery and storage by minimizing the storage of hazardous materials on-site, storing materials in a designated area, installing secondary containment, conducting regular inspections, and training employees and subcontractors.

This best management practice covers only material delivery and storage. For other information on materials, see CA11 (Material Use), or CA12 (Spill Prevention and Control). For information on wastes, see the waste management BMPs in this chapter.

APPROACH

The following materials are commonly stored on this construction sites:

- ~~Soil,~~
- ~~Pesticides and herbicides,~~
- Fertilizers,
- ~~Detergents,~~
- Petroleum products such as fuel, oil, and grease, and
- Other hazardous chemicals such as acids, lime, glues, paints, solvents, and curing compounds.

Storage of these materials on-site can pose the following risks:

- Storm water pollution,
- Injury to workers or visitors,
- Groundwater pollution, and
- Soil contamination.

Therefore, the following steps should be taken to minimize your risk:

- Designate areas of the construction site for material delivery and storage.
  - -Place near the construction entrances, away from waterways (Southeast corner)
  - -Avoid transport near drainage paths or waterways
  - -Surround with earth berms (see ESC30, Earth Dike.)
  - -Place in an area which will be paved
- Storage of reactive, ignitible, or flammable liquids must comply with the fire codes of your area. Contact the local Fire Marshal to review site materials, quantities, and proposed storage area to determine specific requirements. See the Flammable and Combustible Liquid Code, NFPA30.
- Keep an accurate, up-to-date inventory of materials delivered and stored on-site.
- Keep your inventory down.
- Minimize hazardous materials on-site storage.
- Handle hazardous materials as infrequently as possible.
- During the rainy season, consider storing materials in a covered area. Store materials in ~~secondary containment such as an earthen dike, hay bales, or even a children's wading pool for non-reactive materials such as detergents, oil, grease, and paints.~~

Small amounts of material ~~may~~ will be secondarily contained in "bus boy" trays or concrete mixing trays.

- Do not store chemicals, drums, or bagged materials directly on the ground. Place these items on a pallet and, when possible, in secondary containment.
- ~~If drums must be kept uncovered, store them at a slight angle to reduce ponding of rainwater on the lids and to reduce corrosion.~~ No Drum Storage
- Try to keep chemicals in their original containers, and keep them well labeled.
- Train employees and subcontractors.
- Employees trained in emergency spill cleanup procedures should be present when dangerous materials or liquid chemicals are unloaded.
- If significant residual materials remain on the ground after construction is complete, properly remove materials and any contaminated soil(See CA22). If the area is to be paved, pave as soon as materials are removed to stabilize the soil.

REQUIREMENTS

Cost (Capital, O&M)

- All of the above are low cost measures.

Maintenance

- Keep the designated storage area clean and well organized.
- Conduct routine weekly inspections and check for external corrosion of material containers.
- Keep an ample supply of spill cleanup materials near the storage area.

LIMITATIONS

- ~~Storage sheds often must meet building and fire code requirements.~~ No storage sheds.

REFERENCES

Storm Water Pollution Prevention for Construction Activities (Draft); USEPA, April 1992

Coastal Nonpoint Pollution Control Program: Program Development and Approval Guidance, Working Group Working Paper; USEPA, April 1992

Best Management Practices and Erosion Control Manual for Construction Sites; Flood Control District of Maricopa County, AZ, September 1992

Construction-Related Industries: Best Management Practices for Industrial Storm Water Pollution Control; Santa Clara Valley Nonpoint Source Pollution Control Program, 1992

Additional BMPs

- Use materials removed from bermed storage area w/in 72 hrs.
- Deliver concrete & asphalt roofing materials directly to points of application, and follow appropriate material use BMP (CA 11)

SYMBOL

CA10

State of California
State Water Resources Control Board

NOTICE OF INTENT

TO COMPLY WITH THE TERMS OF THE
GENERAL PERMIT TO DISCHARGE STORM WATER
ASSOCIATED WITH CONSTRUCTION ACTIVITY (WQ Order No. 92-08-DWQ)

MARK ONLY ONE ITEM
1. ☐ Ongoing Construction
2. ☒ New Construction
3. ☐ Change of information
WDID # _____

I. OWNER

Name: NOI Packaging, Inc		Contact Person: S. W. Runoff	
Local Mailing Address: 999 Industry Blvd		Title: Facility Manager	
City: AnyTown	State: CA	Zip: 99999-0000	Phone: 213-555-1212

II. CONSTRUCTION SITE INFORMATION

A. Developer: Same as Owner		Contact Person:	
Local Mailing Address:		Title:	
City:	State:	Zip:	Phone:
B. Site Address: 461 Major Road		County: Contra Permit	
City: AnyTown	State: CA	Zip: 99999-0000	Phone: NONE

C. Is the construction site part of a larger common plan of development or sale? ☐ Yes ☒ No — If yes, name of plan or development:

D. Construction commencement date (MM DD YY): 10 15 92

E. Projected construction completion date (MM DD YY): 09 01 93

III. BILLING ADDRESS

Send to:
☒ OWNER ☐ DEVELOPER
☐ OTHER *(Enter information at right)*

Name: Same as Owner
Mailing Address:
City: State: Zip:

IV. RECEIVING WATER INFORMATION

A. Does your construction site's storm water discharge to: (Check one)

1. ☐ Storm drain system - Enter system owners name
2. ☒ Directly to waters of U.S. (e.g., river, lake, creek, ocean)
3. ☐ Indirectly to waters of U.S.

B. Name of closest receiving water: Minor Creek

STATE USE ONLY

WDID:	Regional Board Office:	Date Permit Issued:
NPDES Permit Number: CA _____	Order Number: _____	Fee Amount Received: $ _____ / Date NOI Received: _____

V. TYPE OF CONSTRUCTION (Check all that apply)

1. ☐ Residential 2. ☒ Commercial 3. ☐ Industrial 4. ☐ Reconstruction 5. ☐ Transportation
6. ☐ Utility 99. ☐ Other (Please List)

VI. MATERIAL HANDLING/MANAGEMENT PRACTICES

A. Types of materials that will be handled and/or stored at the site: (Check all that apply)

1. ☐ Solvents 2. ☒ Metal 3. ☐ Petroleum Products 4. ☐ Plated Products
5. ☒ Asphalt/Concrete 6. ☐ Hazardous Substances 7. ☐ Paints 8. ☐ Wood Treated Products
99. ☐ Other (Please list)

B. Identify proposed management practices to reduce pollutants in storm water discharges: (Check all that apply)

1. ☐ Oil/Water Separator 2. ☒ Erosion Controls 3. ☒ Sedimentation Controls 4. ☐ Overhead Coverage
5. ☒ Detention/Desiltation Pond 99. ☐ Other (Please list)

VII. SITE INFORMATION

A. Total size of construction site: 12 Acres

B. Percent of site impervious: (Including rooftops) Before construction 0 % After construction 70 %

VIII. REGULATORY STATUS

Is the site subject to a locally approved erosion/sediment control plan ? ☒ Yes ☐ No

If yes, name of local agency Anytown Public Works Dept.

IX. CERTIFICATION

I certify under penalty of law that this document and all attachments were prepared under my direction and supervision in accordance with a system designed to assure that qualified personnel properly gather and evaluate the information submitted. Based on my inquiry of the person or persons who manage the system, or those persons directly responsible for gathering the information, the information submitted is, to the best of my knowledge and belief, true accurate, and complete. I am aware that there are significant penalties for submitting false information, including the possibility of fine and imprisonment. In addition, I certify that the provisions of the permit, including the development and implementation of a Storm Water Pollution Prevention Plan and a Monitoring Program Plan, will be complied with.

Printed Name: S. W. Runoff

Signature: S. W. Runoff Date: 10/1/92

Title: Facility Manager

APPENDIX C

GLOSSARY

APPENDIX C

GLOSSARY

Backfill: Earth refilling a trench or an excavation.

Berm: An earthen mound used to direct the flow of runoff around or through a structure.

Best Management Practices (BMPs): Includes schedules of activities, prohibitions of practices, maintenance procedures, and other management practices to prevent or reduce the pollution of waters of the United States. BMPs also include treatment requirements, operating procedures, and practices to control plant site runoff spillage or leaks, sludge or waste disposal, or drainage from raw material storage.

Buffer Strip or Zone: Strip of erosion-resistant vegetation between a waterway and an area of more intensive land use.

Catch Basin: Box-like underground concrete structure with openings in curbs and gutters designed to collect runoff from streets and pavement.

Clean Water Act (CWA): (33 U.S.C. 1251 et seq.) requirement of the NPDES program are defined under Sections 307, 402, 318 and 405 of the CWA.

Conduit: Any pipe for collecting and directing the storm water.

Conveyance System: Any channel or pipe for collecting and directing the storm water.

Construction General Permit: A National Pollutant Discharge Elimination System (NPDES) permit issued by the State Water Resources Control Board for the discharge of storm water associated with construction activity from soil disturbance of five (5) acres or more.

Culvert: A covered channel or a large-diameter pipe that directs water flow below the ground level.

Denuded: Land stripped of vegetation or land that has had its vegetation worn down due to the impacts from the elements or humans.

Discharge: The release of storm water or other substance from a conveyance system or storage container.

Erosion: The wearing away of land surface by wind or water. Erosion occurs naturally from weather or runoff but can be intensified by land-clearing practices related to farming, residential or industrial development, road building, or timber-cutting.

Organic Pollutants: Substances containing carbon which may cause pollution problems in receiving waters.

Organic Solvents: Liquid organic compounds capable of dissolving solids, gases, or liquids.

Outfall: The point where storm water discharges from a pipe, channel, ditch, or other conveyance to a waterway.

Permeability: The quality of a soil that enables water or air to move through it. Usually expressed in inches/hour or inches/day.

Point Source: Any discernible, confined, and discrete conveyance from which pollutants are or may be discharged. This term does not include return flows from irrigated agriculture or agricultural storm water runoff.

Pollutant: Generally, any substance introduced into the environment that adversely affects the usefulness of a resource.

Precipitation: Any form of rain or snow.

Retention: The storage of storm water to prevent it from leaving the development site; may be temporary or permanent.

Runon: Off-site flows which flows onto your site.

Runoff: Water originating from rainfall and other sources (e.g., sprinkler irrigation) that is found in drainage facilities, rivers, streams, springs, seeps, ponds, lakes, wetlands, and shallow groundwater.

Scour: The erosive and digging action in watercourse by flowing water.

Secondary Containment: Structures, usually dikes or berms, surrounding tanks or other storage containers and designed to catch spilled material from the storage containers.

Sedimentation: The process of depositing soil particles, clays, sands, or other sediments that were picked up by runoff.

Sediments: Soil, sand, and minerals washed from land into water usually after rain, that pile up in reservoirs, rivers, and harbors, destroying fish-nesting areas and holes of water animals and clouding the water so that needed sunlight might not reach aquatic plants. Careless farming, mining, and building activities will expose sediment materials, allowing them to be washed off the land after rainfalls.

APPENDIX D

LIST OF ACRONYMS

APPENDIX D

LIST OF ACRONYMS

APWA	American Public Works Association
BMPs	Best Management Practices
CA	Contractor Activities
CCR	California Code of Regulations
CERCLA	Comprehensive Environmental Response Compensation and Liability Act
CEQA	California Environmental Quality Act
CFR	Code of Federal Register
COE	U.S. Army Corps of Engineers
CWA	Clean Water Act (Federal Water Pollution Control Act of 1972 as amended in 1987)
DTSC	California Department of Toxic Substance Control
EIR	Environmental Impact Report
ESC	Erosion and Sedimentation Control
FHWA	Federal Highway Authority
Hazmat	Hazardous Material
O&M	Operations and Maintenance
MSDS	Material Safety Data Sheet
NOAA	National Oceanographic and Atmospheric Administration
NOI	Notice of Intent
NPDES	National Pollutant Discharge Elimination System
OSHA	Occupational Safety and Health Administration
PAHs	Polyaromatic Hydrocarbons
POTW	Publicly Owned Treatment Works
RWQCB	Regional Water Quality Control Board
SARA	Superfund Amendments and Reauthorization Act
SPCC	Spill Prevention Control and Countermeasure
SWPPP	Storm Water Pollution Prevention Plan
SWRCB	State Water Resources Control Board
TSS	Total Suspended Solids
UFC	Uniform Fire Code
USEPA	United States Environmental Protection Agency