FIELD REDEVELOPMENT PROJECT

SECTION 30 T9N R32W

EAST CAT CANYON FIELD – SANTA BARBARA COUNTY – CA

DRAWING INDEX

FILE NO.	REV.	DESCRIPTION	FILE NO.	REV.	DESCRIPTION	FILE NO.	REV.	DESCRIPTION	FILE NO.	REV.	DESCRIPTION
SK–13186–51	E2	TITLE SHEET/DRAWING INDEX – PROCESS	SK–13186–62	E2	PFD – WCP 2 CLARIFIER TANK AND IGF UNIT			SCP			
			SK–13186–63	E2	PFD – WCP 2 FILTERS	SK–13186–83	E2	PFD – SCP 1 SLUDGE TANK, SKIM TANK & CENTRIFUGE			
		GROUP STATION	SK–13186–64	E	PFD – WCP 2 FILTERED WATER STORAGE AND DISTRIBUTION	SK–13186–84	E	PFD – SCP 2 SLUDGE TANK, SKIM TANK & CENTRIFUGE			
SK–13186–52	E2	PFD – DEGASSER VESSELS 1 AND 2				SK–13186–85	E	PFD – SCP FLASH TREATER			
					WSP						
		OCP	SK–13186–67	E2	PFD – WSP 1 SOFTENERS			SGS			
SK–13186–53	E2	PFD – OCP 1 DESAND/FWKO	SK–13186–68	E2	PFD – WSP 2 SOFTENERS	SK–13186–87	E1	PFD – SGS STEAM GENERATORS SG–8120/8220/8320			
SK–13186–54	E2	PFD – OCP 1 COALESCER	SK–13186–69	E	PFD – WSP 1 SW STORAGE, BRINE, DISTRIBUTION AND DISPOSAL	SK–13186–88	E	PFD – SGS STEAM GENERATORS SG–8420/8520/8620			
SK–13186–55	E2	PFD – OCP 2 DESAND/FWKO	SK–13186–70	E	PFD – WSP 2 SW STORAGE, BRINE AND DISTRIBUTION	SK–13186–89	E2	PFD – SGS STEAM DISTRIBUTION AND BLOWDOWN			
SK–13186–56	E2	PFD – OCP 2 COALESCER				SK–13186–90	E	PFD – SGS INSTRUMENT AIR SYSTEM			
SK–13186–97	E	PFD – HEAT MEDIUM SYSTEM			PGTP						
SK–13186–99	E2	PFD – OCP TVR	SK–13186–75	E2	PFD – PGTP PRODUCED GAS COOLING & SCRUBBING			UTILITY SYSTEMS			
			SK–13186–76	E2	PFD – PGTP SULFATREAT/FLARE	SK–13186–91	E2	PFD – COS/LOS TVR			
		COS AND LOS	SK–13186–77	E	PFD – PGTP SULFEROX PLANT AREA 1	SK–13186–92	E2	PFD – WSP TVR			
SK–13186–57	E2	PFD – LOS	SK–13186–78	E	PFD – PGTP SULERFOX PLANT AREA 2	SK–13186–93	E2	PFD – CPP DRAIN SYSTEM			
SK–13186–58	E1	PFD – COS	SK–13186–79	E	PFD – PGTP SULFEROX CHEMICAL STORAGE	SK–13186–94	E2	PFD – NORTH CPP INSTRUMENT AIR SYSTEM			
						SK–13186–95	E	PFD – FIRE & UTILITY WATER			
		WCP			PGSG	SK–13186–96	E	PFD – SISQUOC PRODUCTION GATHERING			
SK–13186–59	E2	PFD – WCP 1 CLARIFIER TANK AND IGF UNIT	SK–13186–80	E2	PFD – PGSG STEAM GENERATOR SG–6030	SK–13186–98	E	PFD – SOUTH CPP INSTRUMENT AIR SYSTEM			
SK–13186–60	E2	PFD – WCP 1 FILTERS	SK–13186–81	E	PFD – PGSG SO2 SCRUBBING	SK–13186–129	E	PFD – INSTRUMENT/UTILITY AIR SYSTEM			
SK–13186–61	E	PFD – WCP 1 FILTERED WATER STORAGE AND DISTRIBUTION	SK–13186–82	E	PFD – PGSG WESP						

DWG NUMBER	TITLE
REFERENCE DRAWINGS	

TJCROSS ENGINEERS

AUTOCAD CONTROL

SCALE: NONE
PLOT AT: 1=1
ENGINEER: WES
DATE STARTED: 09/02/13
FILE: 13186/SK1318651
LAYER(S):
CHANGED BY: JJM
LAST CHANGED: 03/28/16

DATE	REV	DESCRIPTION	BY	APPR	ENG
03/28/16	E2	REVISED IFR	CJF	SMH	EWP
11/02/15	E1	ISSUED FOR REVIEW	CJF	SMH	EWP
07/18/14	E	ISSUED FOR REVIEW	OIC	SMH	EWP
06/24/14	D	REVISED PER AERA REVIEW	CJF	SMH	EWP
05/21/14	C	REVISED IFR	CJF	SMH	EWP
04/08/14	B	RE–ISSUED PER AERA COMMENTS	CJF	SMH	EWP
11/27/13	A	ISSUED FOR REVIEW	CJF	SMH	EWP

AERA

TITLE SHEET/DRAWING INDEX – PROCESS
FIELD REDEVELOPMENT PROJECT
SECTION 30 T9N R32W
EAST CAT CANYON FIELD – SANTA BARBARA COUNTY – CA

AERA ENGINEER: ERIC PAULSON
CO. ENGINEER: TJ CROSS ENGINEERS, INC.
PROJ. MGR: ALI GOKGOZ
DRAFTED BY: TJ CROSS ENGINEERS, INC
ECCN NO.
ORIGINAL DWG NO.
DATE: 09/13/13 SCALE: NONE
NO. SK–13186–51 REV. E2
CAD FILE NO. SK1318651

:FUNCTIONAL LOCATION NO.

PROCESS PARAMETER (OPERATING) \ STREAM DESCRIPTION	1 GROUP STATION 1 PRODUCTION TO OCP 1	41 GROUP STATION 2 PRODUCTION TO OCP 2	101 FIELD PRODUCTION TO PRODUCTION GROUP STATIONS	102 FIELD PRODUCTION TO PRODUCTION GROUP STATIONS	103 FIELD PRODUCTION TO GROUP STATION 1	104 FIELD PRODUCTION TO GROUP STATION 1 DEGASSER VESSEL	105 GROUP STATION 1 PRODUCED GAS AND STEAM TO OCP 1	106 GROUP STATION 2 PRODUCED GAS AND STEAM TO OCP 2																	
OIL (BPD)	4,994	4,994	5,000	5,000	5,000	5,000	6	6																	
WATER\ STEAM (BPD)	18,253	18,253	18,825	18,825	18,825	18,825	572	572																	
CONDENSIBLE H.C. (BPD)																									
NON-CONDEN. GAS (MMSCFD)	0.0000	0.0000	0.5000	0.5000	0.5000	0.5000	0.5000	0.5000																	
WATER SG. (W/60 F REF.)	1.003	1.003	1.003	1.003	1.003	1.003																			
GAS MW	40.8	40.8	30.4	30.4	30.4	30.4	30.3	30.3																	
PRESSURE (PSIG)	22	22			35	35	35	35																	
TEMPERATURE (°F)	260	260			260	260	260	260																	
LINE SIZE (IN)	6	6	6	6	6	6	10	10																	
PIPE MATERIAL/SPEC	3CS2S01	3CS2S01	3CS2S01	3CS2S01	3CS2S01	3CS2S01	3CS2S01	3CS2S01																	

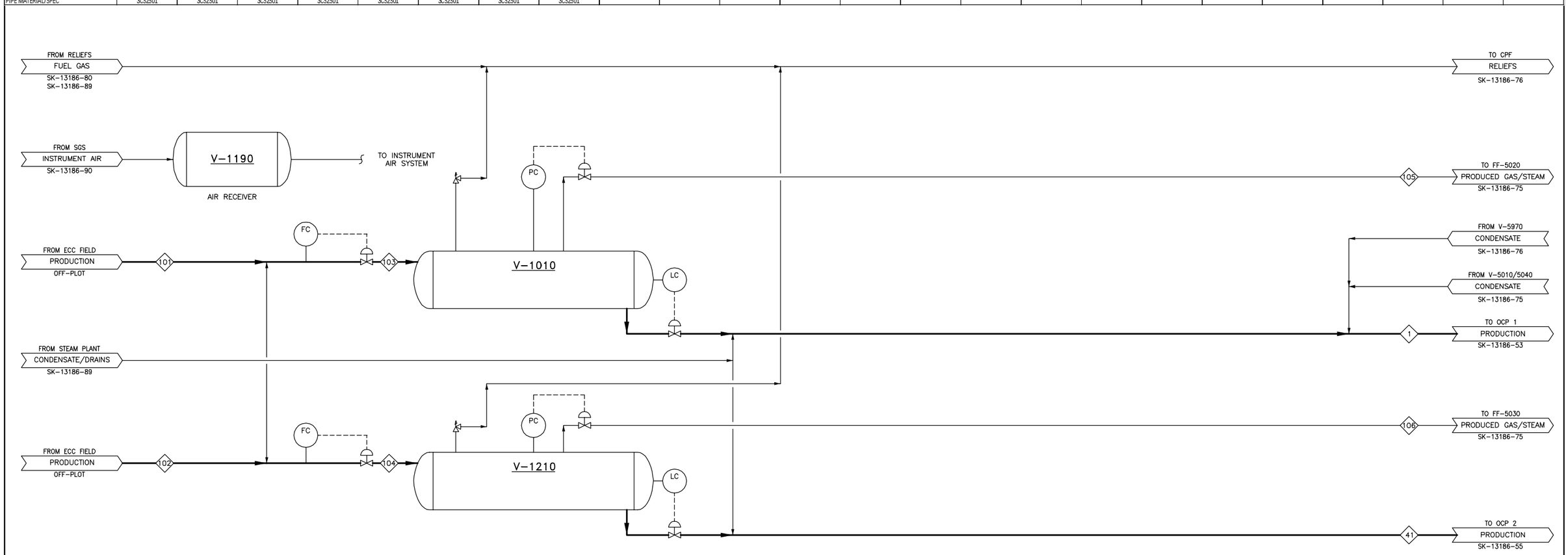

ITEM	VESSELS		
	V-1010	V-1210	V-1190
SERVICE	PRODUCTION TRAIN 1 GROUP STATION DE-GASSING	PRODUCTION TRAIN 2 GROUP STATION DE-GASSING	AIR RECEIVER
DIMENSIONS	8'-0"Ø x 30'-0" S/S	8'-0"Ø x 30'-0" S/S	30"Ø x 72" S/S
OPERATING/DESIGN PRESS (PSIG)	35 / 300	35 / 300	125 / 200
OPERATING/DESIGN TEMP (°F)	260 / 400	260 / 400	100 / 200
DESIGN FLOW-GAS (MMSCFD)	5.0	5.0	
DESIGN FLOW-LIQUID (BPD)	25,000	25,000	
HOLDING CAPACITY	270 BBL	270 BBL	200 GAL
DESIGN & FABRICATION CODE	ASME SEC. VIII	ASME SEC. VIII	ASME SEC. VIII

DWG NUMBER	TITLE
SK-13186-51	TITLE SHEET/DRAWING INDEX - PROCESS

REFERENCE DRAWINGS

TJCROSS ENGINEERS

T.J. CROSS AUTOCAD CONTROL
SCALE: NONE
PLOT AT: 1:1
ENGINEER: WES
DATE STARTED: 01/09/14
FILE: 13186/SK1318652
LAYER(S): AERA
CHANGED BY: JJM
LAST CHANGED: 03/28/16

DATE	REV	DESCRIPTION	BY	APPR	AERA ENG
03/28/16	E2	REVISED IFR	CJF	SMH	EWP
11/02/15	E1	ISSUED FOR REVIEW	CJF	SMH	EWP
07/18/14	E	ISSUED FOR REVIEW	OIC	SMH	EWP
06/24/14	D	REVISED PER AERA REVIEW	CFJ	SMH	EWP
05/19/14	C	REVISED IFR	CJF	SMH	EWP
04/08/14	B	RE-ISSUED PER AERA COMMENTS	CJF	SMH	EWP
11/27/13	A	ISSUED FOR REVIEW	CJF	SMH	EWP

AERA

PROCESS FLOW DIAGRAM - GROUP STATION - DEGASSER VESSELS 1 AND 2
FIELD REDEVELOPMENT PROJECT
SECTION 30 T9N R32W
EAST CAT CANYON FIELD - SANTA BARBARA COUNTY - CA

AERA ENGINEER: ERIC PAULSON
CO. ENGINEER: TJ CROSS ENGINEERS, INC.
PROJ. MGR: ALI GOKGOZ
DESIGNED BY: TJ CROSS ENGINEERS, INC.
DRAFTED BY: OLIVIA CASTRO
ECCN NO.

DATE: 09/13/13
SCALE: NONE
ORIGINAL DWG NO.
NO. SK-13186-52
REV. E2
CAD FILE NO. SK1318652

:FUNCTIONAL LOCATION NO.

STREAM DESCRIPTION / PROCESS PARAMETER (OPERATING)	1 TRAIN 1 PRODUCTION FROM FIELD	2 PRODUCTION AND LIGHT CRUDE OIL TO TREATING TRAIN 1	3 DE-GASSED PRODUCTION TO FWKO TRAIN 1	4 PRODUCED GAS FROM DE-SANDER TRAIN 1	5 EMULSION TO TRAIN 1 COALESCER	6 PRODUCED WATER FROM FWKO TRAIN 1	7 PRODUCED GAS FROM FWKO TRAIN 1	8 PRODUCED GAS FROM DE-SANDER/FWKO TRAIN 1	9 WET STEAM TO LCO HEATER	10 STEAM CONDENSATE FROM LCO HEATER	11 PRODUCED WATER AND STEAM COND. FROM FWKO TRAIN 1	12 LIGHT CRUDE FROM HEAT MEDIUM LCO HEATER	13 HEATED LIGHT CRUDE TO TRAIN 1	14 OILY SOLIDS TO SCP 1	204 LIGHT CRUDE OIL FROM LOS	210 WARM HEAT MEDIUM TO LCO HEAT MEDIUM HEATER	211 COOL HEAT MEDIUM FROM LCO HEAT MEDIUM HEATER	327 JET WATER TO OCP TRAIN 1 DE-SANDERS (PERIODIC FLOW)					
OIL (BPD)	4,994	6,659	6,659		6,659			6				1,665	1,665		1,665									
WATER\ STEAM (BPD)	18,253	18,253	18,253		2,854	15,399		572	132	132	15,531			321				321						
GLYCOL (BPD)																801	801							
NON-CONDEN. GAS (MMSCFD)	0.0000	0.0000	0.0000		0.0000	0.0000					0.0000													
WATER SG. (W/60 F REF.)	1.003	1.003	1.003		1.003	1.003			1.003	1.003	1.003			1.003				1.003						
GAS MW / STEAM QUALITY (%)	40.8	40.8	40.8	40.8	40.7	41.2		30.3	44%	0%	41.2													
PRESSURE (PSIG)	60.0	55	45	30	40	40	30	30	250	250	40	60	55	55	70	197	192	75						
TEMPERATURE (°F)	260	260	260	260	260	260	260	248	406	406	261	196	260	175	80	211	100	175						
LINE SIZE (IN)	6	6	6	6	6	6	6	10	2	1	6	3	3	4	3	2	2	4						
PIPE MATERIAL/SPEC	3CS2S01	1CS2S01	1CS2S01	1CS2S01	1CS2S01	1CS2S01	1CS2S01	1CS2S01	3CS2S01	3CS2S01	1CS2S01	1CS2S01	1CS2S01	1CS2S01	1CS2S01	1CS2S01	1CS2S01	1CS2S01						

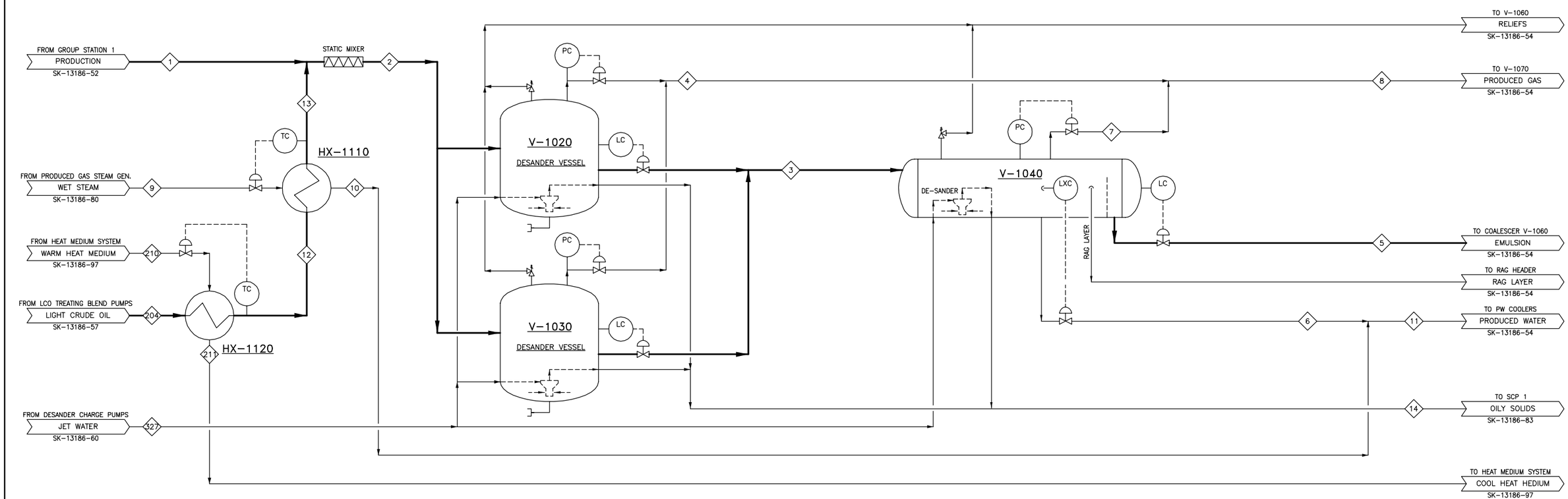

ITEM	VESSELS		ITEM	HEAT EXCHANGERS	
	V-1020/1030	V-1040		HX-1110	HX-1120
SERVICE	TRAIN 1 DE-SANDING & DE-GASSING	TRAIN 1 FWKO	SERVICE	TRAIN 1 LCO STEAM HEATER	TRAIN 1 LCO HEAT MEDIUM HEATER
DIMENSIONS	8'-0"Ø x 16'-0" S/S	12'-0"Ø x 60'-0" S/S	DUTY (MMBTU/HR)	1.0	1.5
OPERATE/DESIGN PRESSURE (PSIG)	55 / 200	45 / 125	PROCESS DP (PSI)	5	5
OPERATE/DESIGN TEMPERATURE (°F)	260 / 350	260 / 350	SHELL SIDE TEMP IN/OUT (°F)	406 / 406	80 / 196
DESIGN FLOW - GAS (MMSCFD)	0.500	0.500	TUBE SIDE TEMP IN/OUT (°F)	196 / 260	211 / 100
DESIGN FLOW - LIQUID (BPD)	25,000	25,000	DESIGN PRESSURE (PSIG)	SH: 300/ T: 150	SH: 300/ T: 150
HOLDING CAPACITY (BBL)			DESIGN TEMPERATURE (°F)	450	300
			DIMENSIONS		
DESIGN & FABRICATION CODE	ASME SEC. VIII	ASME SEC. VIII	DESIGN & FABRICATION CODE	TEMA	TEMA

DWG NUMBER	TITLE
SK-13186-51	TITLE SHEET/DRAWING INDEX – PROCESS

REFERENCE DRAWINGS

RE-ISSUED FOR REVIEW
NOT FOR CONSTRUCTION

TJCROSS ENGINEERS

T.J. CROSS AUTOCAD CONTROL
SCALE: NONE
PLOT AT: 1:1
ENGINEER: WES
DATE STARTED: 09/02/13
FILE: 13186/SK1318653
LAYER(S): AERA
CHANGED BY: CJF
LAST CHANGED: 12/28/15

DATE	REV	DESCRIPTION	BY	APPR	AERA ENG
12/29/15	E2	REVISED IFR	CJF	SMH	EWP
07/18/14	E	ISSUED FOR REVIEW	OIC	SMH	EWP
06/24/14	D	REVISED PER AERA REVIEW	CJF	SMH	EWP
05/19/14	C	REVISED IFR	CJF	SMH	EWP
04/08/14	B	RE-ISSUED PER AERA COMMENTS	CJF	SMH	EWP
10/24/13	A	ISSUED FOR REVIEW	CJF	SMH	EWP

AERA

PROCESS FLOW DIAGRAM – OCP 1 DESAND/FWKO
FIELD REDEVELOPMENT PROJECT
SECTION 30 T9N R32W
EAST CAT CANYON FIELD – SANTA BARBARA COUNTY – CA

AERA ENGINEER: ERIC PAULSON
CO. ENGINEER: TJ CROSS ENGINEERS, INC.
PROJ. MGR: ALI GOKGOZ
DESIGNED BY: TJ CROSS ENGINEERS INC.
DRAFTED BY: OLIVIA CASTRO
ECCN NO.

DATE: 09/13/13
SCALE: NONE
ORIGINAL DWG NO.
NO. SK-13186-53
REV. E2
CAD FILE NO. SK1318653

:FUNCTIONAL LOCATION NO.

STREAM DESCRIPTION / PROCESS PARAMETER (OPERATING)	5 EMULSION FROM TRAIN 1 FWKO	8 PRODUCED GAS FROM TRAIN 1 DE-SANDER/FWKO	11 PRODUCED WATER FROM FWKO TRAIN 1	15 EMULSION TO TRAIN 1 COALESCER	16 DRY CRUDE OIL FROM V-1060	17 PRODUCED WATER FROM V-1060	18 PRODUCED GAS FROM V-1060	19 TRAIN 1 STEAM AND PRODUCED GAS TO V-1070	20 TRAIN 1 STEAM AND PRODUCED GAS TO HX-1080	21 TRAIN 1 WARM PRODUCED GAS TO PGTP	22 COOL HEAT MEDIUM TO PRODUCED GAS COOLER	23 HOT HEAT MEDIUM FROM PRODUCED GAS COOLER	24 STEAM TO EMULSION HEATER	25 COOL HEAT MEDIUM TO DRY OIL COOLER	26 HOT HEAT MEDIUM FROM DRY OIL COOLER	27 COOL HEAT MEDIUM TO PRODUCED WATER COOLER	28 HOT HEAT MEDIUM FROM PRODUCED WATER COOLER	29 CLEAN BLEND TO COS	30 STEAM CONDENSATE FROM EMULSION HEATER	31 HOT PRODUCED WATER TO PRODUCED WATER COOLER	32 COOLED PRODUCED WATER TO WCP 1	120 COOL HEAT MEDIUM TO PRODUCTION COOLERS	806 HOT HEAT MEDIUM FROM PRODUCTION COOLERS	.
OIL (BPD)	6,659	6		6,659	6,659			6	6	6								6,659						
WATER\ STEAM (BPD)	2,854	572	15,531	2,854	100	2,754		572	560	560			NNF					100	NNF	18,285	18,285			
GLYCOL (BPD)											8,274	8,274		2,839	2,839	19,295	19,295					30,408	30,408	
NON-CONDEN. GAS (MMSCFD)	0.0000		0.0000	0.0000	0.0000													0.0000		0.0000	0.0000			
WATER SG. (W/60 F REF.)	1.003		1.003	1.003	1.003	1.003		1.003	1.003	1.003			1.003					1.003	1.003	1.003	1.003			
GAS MW / STEAM QUALITY (%)	40.7	30.3	41.2	40.7	40.7			30.3	30.3	30.3			44%					40.7	0%	41.2	41.2			
PRESSURE (PSIG)	40	30	40	35	30	30	30	30	30	30	250	245	250	250	245	250	245	25	250	30	25	250	245	
TEMPERATURE (°F)	260	248	261	260	260	260	260	248	248	180	160	233	406	160	245	160	247	190	406	260	180	160	243	
PIPE SIZE (IN.)	6	10	6	6	4	3	4	10	10	10	4	4	4	3	3	6	6	4	2	8	8	8	8	
PIPE MATERIAL/SPEC.	1CS2S01	1CS2S01	1CS2S01	1CS2S01	1CS2S01	1CS2S01	1CS2S01	1CS2S01	1CS2S01	1CS2S01	1CS2S01	1CS2S01	3CS2S01	1CS2S01	1CS2S01	1CS2S01	1CS2S01	1CS2S01	3CS2S01	1CS2S01	1CS2S01	3CS2S01	3CS2S01	

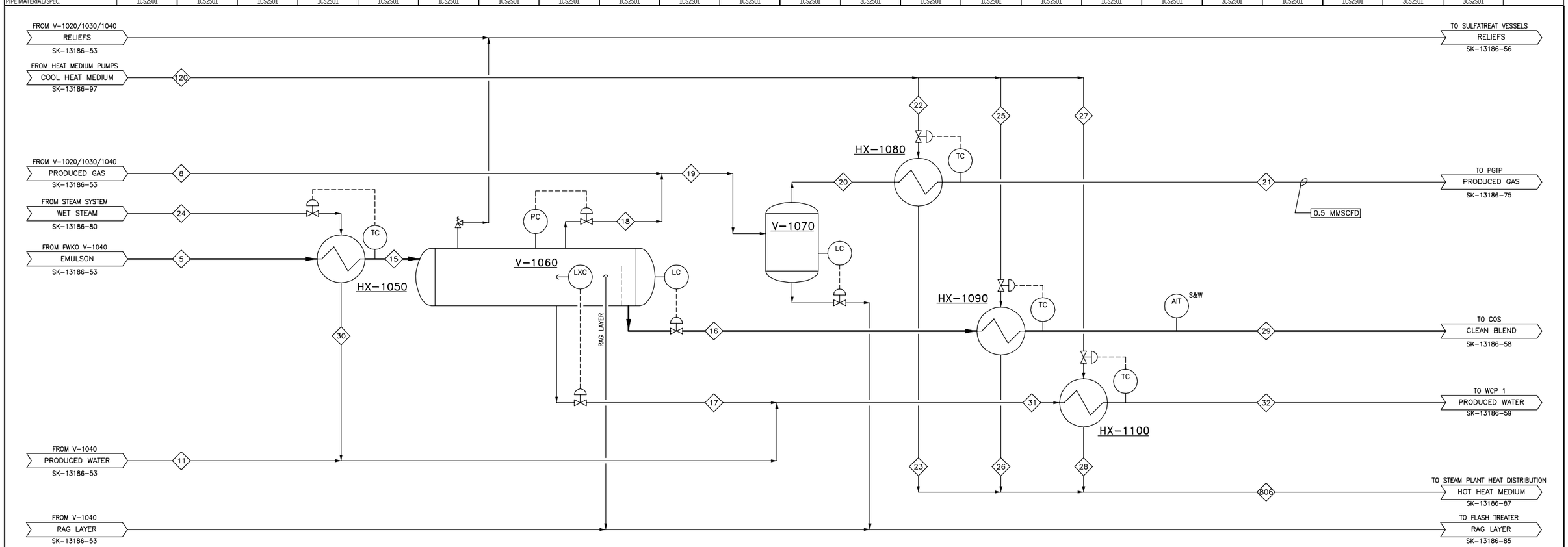

ITEM	VESSELS	
	V-1060	V-1070
SERVICE	TRAIN 1 ELECTROSTATIC COALESCER	TRAIN 1 PRODUCED GAS SCRUBBER
DIMENSIONS	12'-0"Ø x 60'-0" S/S	3'-6"Ø x 12'-0" S/S
OPERATE/DESIGN PRESSURE (PSIG)	35 / 125	25 / 125
OPERATE/DESIGN TEMPERATURE (˚F)	260 / 350	260 / 350
DESIGN FLOW - GAS (MMSCFD)	0.500	5.0
DESIGN FLOW - LIQUID (BPD)	10,000	100
HOLDING CAPACITY (BBL)		
REMARKS:		
DESIGN & FABRICATION CODE	ASME SEC. VIII	ASME SEC. VIII

ITEM	HEAT EXCHANGERS			
	HX-1050	HX-1080	HX-1090	HX-1100
SERVICE	TRAIN 1 EMULSION HEATER	TRAIN 1 PRODUCED GAS COOLER	TRAIN 1 TREATED OIL COOLER	TRAIN 1 PRODUCED WATER COOLER
DUTY (MMBTU/HR)	5.5	10.0	4.0	27.3
PROCESS DP (PSI)	5	5	5	5
SHELL SIDE TEMP IN/OUT (˚F)	406 / 406	160 / 233	160 / 245	160 / 247
TUBE SIDE TEMP IN/OUT (˚F)	210 / 260	248 / 180	260 / 190	260 / 180
DESIGN PRESSURE (PSIG)	SH: 300 / T: 300	SH: 300 / T: 150	SH: 300 / T: 150	SH: 300 / T: 150
DESIGN TEMPERATURE (˚F)	450	300	300	300
DIMENSIONS				
DESIGN & FABRICATION CODE	TEMA	TEMA	TEMA	TEMA

SK-13186-51	TITLE SHEET/DRAWING INDEX – PROCESS
DWG NUMBER	TITLE

REFERENCE DRAWINGS

RE-ISSUED FOR REVIEW
NOT FOR CONSTRUCTION

TJCROSS ENGINEERS

T.J. CROSS AUTOCAD CONTROL
SCALE: NONE
FILE: 13186/SK1318654
PLOT AT: 1:1
LAYER(S): AERA
ENGINEER: WES
CHANGED BY: CJF
DATE STARTED: 09/02/13
LAST CHANGED: 12/28/15

DATE	REV	DESCRIPTION	BY	APPR	AERA ENG
12/29/15	E2	REVISED IFR	CJF	SMH	EWP
07/18/14	E	ISSUED FOR REVIEW	OIC	SMH	EWP
06/24/14	D	REVISED PER AERA REVIEW	CJF	SMH	EWP
05/19/14	C	REVISED IFR	CJF	SMH	EWP
04/08/14	B	RE-ISSUED PER AERA COMMENTS	CJF	SMH	EWP
10/24/13	A	ISSUED FOR REVIEW	CJF	SMH	EWP

AERA

PROCESS FLOW DIAGRAM – OCP 1 COALESCER
FIELD REDEVELOPMENT PROJECT
SECTION 30 T9N R32W
EAST CAT CANYON FIELD – SANTA BARBARA COUNTY – CA

AERA ENGINEER: ERIC PAULSON
DATE: 09/13/13
SCALE: NONE
CO. ENGINEER: TJ CROSS ENGINEERS, INC.
ORIGINAL DWG NO.
PROJ. MGR: ALI GOKGOZ
DESIGNED BY: TJ CROSS ENGINEERS INC.
DRAFTED BY: OLIVIA CASTRO
ECCN NO.
NO. SK-13186-54
REV. E2
CAD FILE NO. SK1318654

:FUNCTIONAL LOCATION NO.

Stream Description / Process Parameter (OPERATING)	41 TRAIN 2 PRODUCTION FROM FIELD	42 PRODUCTION AND LIGHT CRUDE OIL TO TREATING TRAIN 2	43 DE-GASSED PRODUCTION TO FWKO TRAIN 2	44 PRODUCED GAS FROM DE-SANDER TRAIN 2	45 EMULSION TO COALESCER TRAIN 2	46 PRODUCED WATER FROM FWKO TRAIN 2	47 PRODUCED GAS FROM FWKO TRAIN 2	48 PRODUCED GAS FROM DE-SANDER/FWKO TRAIN 2	49 WET STEAM TO LCO HEATER	50 STEAM CONDENSATE FROM LCO HEATER	51 LIGHT CRUDE FROM HEAT MEDIUM LCO HEATER	52 HEATED LIGHT CRUDE TO TRAIN 2	53 PRODUCED WATER AND STEAM COND. FROM FWKO TRAIN 2	72 OILY SOLIDS TO SCP 2	204 LIGHT CRUDE OIL FROM LOS	210 HOT HEAT MEDIUM TO LCO HEAT MEDIUM HEATER	211 COOL HEAT MEDIUM FROM LCO HEAT MEDIUM HEATER	327 JET WATER TO OCP TRAIN 2 DE-SANDERS (PERIODIC FLOW)					
OIL (BPD)	4,994	6,659	6,659		6,659			6			1,665	1,665			1,665								
WATER\ STEAM (BPD)	18,253	18,253	18,253		2,854	15,399		572	132	132			15,531	321				321					
GLYCOL (BPD)																801	801						
NON-CONDEN. GAS (MMSCFD)	0.0000	0.0000	0.0000		0.0000	0.0000							0.0000										
WATER SG. (W/60 F REF.)	1.003	1.003	1.003		1.003	1.003			1.003	1.003			1.003	1.003									
GAS MW / STEAM QUALITY (%)	40.8	40.8	40.8	40.8	40.7	41.2		30.3	44%	0%			41.2										
PRESSURE (PSIG)	60	55	45	30	40	40	30	30	250	250	60	55	40	55	70	197	192						
TEMPERATURE (°F)	260	260	260	260	260	260	260	248	406	406	196	260	261	175	80	211	100	175					
LINE SIZE (IN)	6	6	6	6	6	6	6	6	2	1	3	3	6	4	3	2	2	4					
PIPE MATERIAL/SPEC	3CS2S01	1CS2S01	1CS2S01	1CS2S01	1CS2S01	1CS2S01	1CS2S01	1CS2S01	3CS2S01	3CS2S01	1CS2S01	3CS2S01	1CS2S01	1CS2S01	3CS2S01	1CS2S01	1CS2S01	1CS2S01					

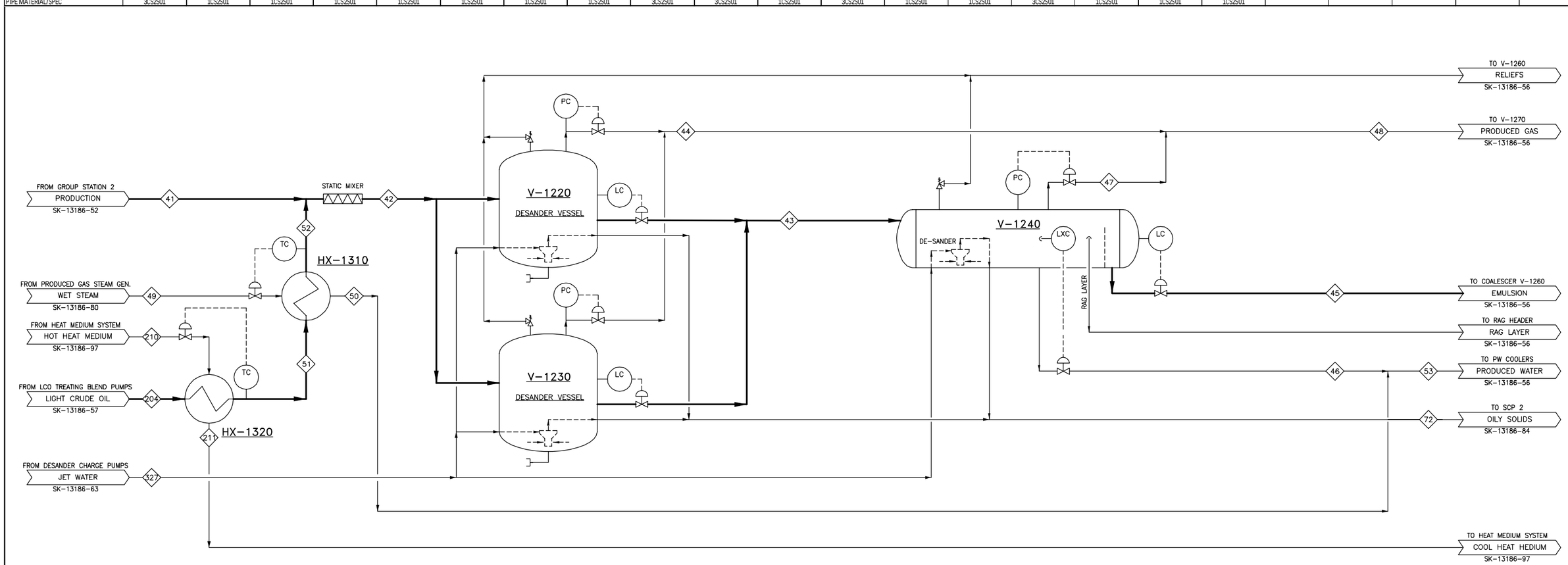

ITEM	VESSELS		ITEM	HEAT EXCHANGERS	
	V-1220/1230	V-1240		HX-1310	HX-1320
SERVICE	TRAIN 2 DE-SANDING & DE-GASSING	TRAIN 2 FWKO	SERVICE	TRAIN 2 LCO STEAM HEATER	TRAIN 1 LCO HEAT MEDIUM HEATER
DIMENSIONS	8'-0"Ø x 16'-0" S/S	12'-0"Ø x 60'-0" S/S	DUTY (MMBTU/HR)	1.0	1.5
OPERATE/DESIGN PRESSURE (PSIG)	55 / 200	45 / 125	PROCESS DP (PSI)	5	5
OPERATE/DESIGN TEMPERATURE (°F)	260 / 350	260 / 350	SHELL SIDE TEMP IN/OUT (°F)	406 / 406	80 / 196
DESIGN FLOW - GAS (MMSCFD)	0.500	0.500	TUBE SIDE TEMP IN/OUT (°F)	196 / 260	211 / 100
DESIGN FLOW - LIQUID (BPD)	25,000	25,000	DESIGN PRESSURE (PSIG)	SH: 300/ T: 150	SH: 300/ T: 150
HOLDING CAPACITY (BBL)			DESIGN TEMPERATURE (°F)	450	300
REMARKS:			DIMENSIONS		
DESIGN & FABRICATION CODE	ASME SEC. VIII	ASME SEC. VIII	DESIGN & FABRICATION CODE	TEMA	TEMA

SK-13186-51	TITLE SHEET/DRAWING INDEX – PROCESS
DWG NUMBER	TITLE

REFERENCE DRAWINGS

RE-ISSUED FOR REVIEW
NOT FOR CONSTRUCTION

TJCROSS ENGINEERS

T.J. CROSS AUTOCAD CONTROL
SCALE: NONE
PLOT AT: 1:1
ENGINEER: WES
DATE STARTED: 09/02/13
FILE: 13186/SK1318655
LAYER(S): AERA
CHANGED BY: CJF
LAST CHANGED: 12/28/15

DATE	REV	DESCRIPTION	BY	APPR	AERA ENG
12/29/15	E2	REVISED IFR	CJF	SMH	EWP
07/18/14	E	ISSUED FOR REVIEW	OIC	SMH	EWP
06/24/14	D	REVISED PER AERA REVIEW	CJF	SMH	EWP
05/19/14	C	REVISED IFR	CJF	SMH	EWP
04/08/14	B	RE-ISSUED PER AERA COMMENTS	CJF	SMH	EWP
10/24/13	A	ISSUED FOR REVIEW	CJF	SMH	EWP

AERA

PROCESS FLOW DIAGRAM – OCP 2 DESAND/FWKO
FIELD REDEVELOPMENT PROJECT
SECTION 30 T9N R32W
EAST CAT CANYON FIELD – SANTA BARBARA COUNTY – CA

AERA ENGINEER: ERIC PAULSON
CO. ENGINEER: TJ CROSS ENGINEERS, INC.
PROJ. MGR: ALI GOKGOZ
DESIGNED BY: TJ CROSS ENGINEERS, INC.
DRAFTED BY: OLIVIA CASTRO
ECCN NO.

DATE: 09/13/13
SCALE: NONE
ORIGINAL DWG NO.
NO. SK-13186-55
REV. E2
CAD FILE NO. SK1318655

:FUNCTIONAL LOCATION NO.

Stream Description / Process Parameter (OPERATING)	45 EMULSION FROM TRAIN 2 FWKO	48 PRODUCED GAS FROM TRAIN 2 DE-SANDER/FWKO	53 PRODUCED WATER FROM FWKO TRAIN 2	54 EMULSION TO TRAIN 2 COALESCER	55 DRY CRUDE OIL FROM V-1260	56 STEAM TO HX-1250	57 PRODUCED WATER FROM V-1260	58 PRODUCED GAS FROM V-1260	59 TRAIN 2 STEAM AND PRODUCED GAS TO V-1270	60 TRAIN 2 STEAM AND PRODUCED GAS TO HX-1280	61 TRAIN 2 WARM PRODUCED GAS TO PGTP	62 COOL HEAT MEDIUM TO PRODUCED GAS COOLER	63 HOT HEAT MEDIUM FROM PRODUCED GAS COOLER	64 CLEAN BLEND TO COS	65 COOL HEAT MEDIUM TO DRY OIL COOLER	66 HOT HEAT MEDIUM FROM DRY OIL COOLER	67 COOL HEAT MEDIUM TO PRODUCED WATER COOLER	68 HOT HEAT MEDIUM FROM PRODUCED WATER COOLER	69 STEAM CONDENSATE FROM EMULSION HEATER	70 HOT PRODUCED WATER TO PRODUCED WATER COOLER	71 COOLED PRODUCED WATER TO WCP 2	120 COOL HEAT MEDIUM TO PRODUCTION COOLERS	806 HOT HEAT MEDIUM FROM PRODUCTION COOLERS	.
OIL (BPD)	6,659	6		6,659	6,659				6	6	6			6,659										
WATER\ STEAM (BPD)	2,854	572	15,531	2,854	100	NNF	2,754		572	560	560			100					NNF	18,285	18,285			
GLYCOL (BPD)												8,274	8,274		2,839	2,839	19,295	19,295				30,408	30,408	
NON-CONDEN. GAS (MMSCFD)	0.0000		0.0000	0.0000	0.0000									0.0000						0.0000	0.0000			
WATER SG. (W/60 F REF.)	1.003		1.003	1.003	1.003	1.003	1.003		1.003	1.003	1.003			1.003					1.003	1.003	1.003			
GAS MW / STEAM QUALITY (%)	40.7	30.3	41.2	40.7	40.7	44%			30.3	30.3	30.3			40.7						41.2	41.2			
PRESSURE (PSIG)	40.0	30	40	35	30	250	30	30	30	30	30	250	245	25	250	245	250	245	250	30	25	250	245	
TEMPERATURE (°F)	260	248	261	260	260	406	260	260	248	248	180	160	233	190	160	245	160	247	406	260	180	160	243	
PIPE SIZE (IN.)	6	10	6	6	4	4	3	4	10	10	10	4	4	4	3	3	6	6	2	8	8	8	8	
PIPE MATERIAL/SPEC.	1CS2S01	1CS2S01	1CS2S01	1CS2S01	1CS2S01	3CS2S01	1CS2S01	1CS2S01	1CS2S01	1CS2S01	1CS2S01	1CS2S01	1CS2S01	1CS2S01	1CS2S01	1CS2S01	1CS2S01	1CS2S01	3CS2S01	1CS2S01	1CS2S01	3CS2S01	3CS2S01	

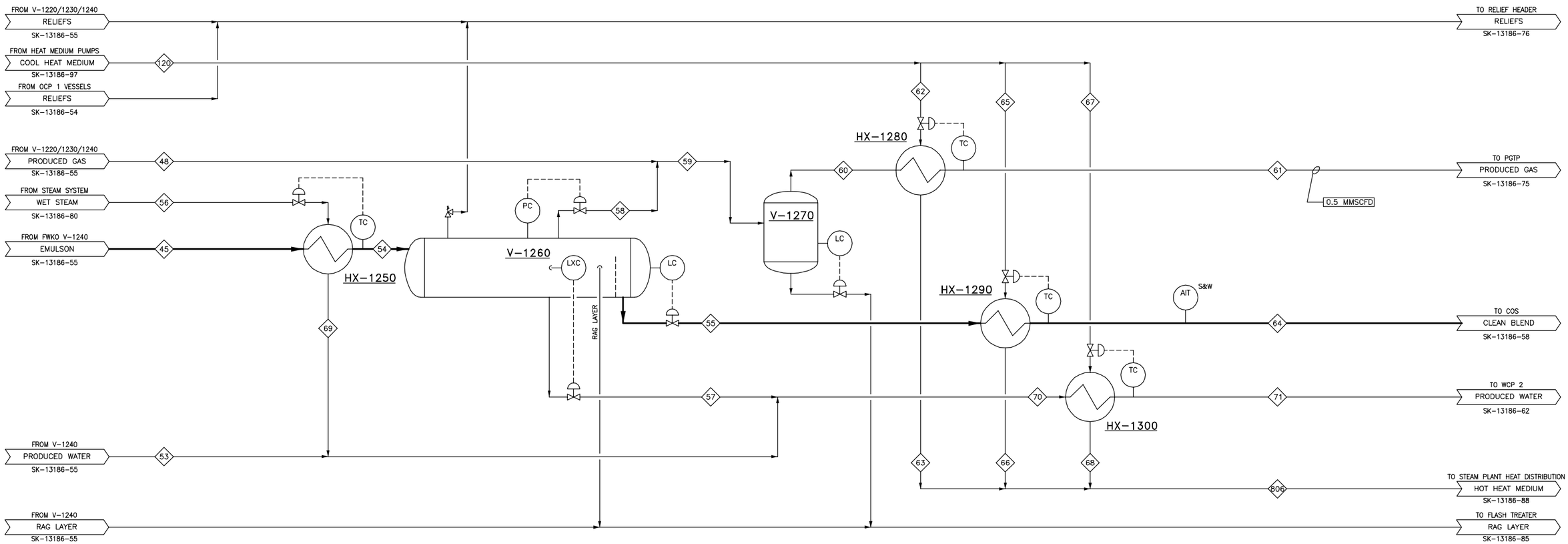

ITEM	VESSELS V-1260	VESSELS V-1270	ITEM	HEAT EXCHANGERS HX-1250	HX-1280	HX-1290	HX-1300
SERVICE	TRAIN 2 ELECTROSTATIC COALESCER	TRAIN 2 PRODUCED GAS SCRUBBER	SERVICE	TRAIN 2 EMULSION HEATER	TRAIN 2 PRODUCED GAS COOLER	TRAIN 2 TREATED OIL COOLER	TRAIN 2 PRODUCED WATER COOLER
DIMENSIONS	12'-0"Ø x 60'-0" S/S	3'-6"Ø x 12'-0" S/S	DUTY (MMBTU/HR)	5.5	10	4.0	27.3
OPERATE/DESIGN PRESSURE (PSIG)	35 / 125	25 / 125	PROCESS DP (PSI)	5	5	5	5
OPERATE/DESIGN TEMPERATURE (°F)	260 / 350	260 / 350	SHELL SIDE TEMP IN/OUT (°F)	406 / 406	160 / 233	160 / 245	160 / 247
DESIGN FLOW - GAS (MMSCFD)	0.500	5.0	TUBE SIDE TEMP IN/OUT (°F)	210 / 260	248 / 180	260 / 190	260 / 180
DESIGN FLOW - LIQUID (BPD)	10,000	100	DESIGN PRESSURE (PSIG)	SH: 300 / T: 300	SH: 300 / T: 150	SH: 300 / T: 150	SH: 300 / T: 150
HOLDING CAPACITY (BBL)			DESIGN TEMPERATURE (°F)	450	300	300	300
REMARKS:			DIMENSIONS				
DESIGN & FABRICATION CODE	ASME SEC. VIII	ASME SEC. VIII	DESIGN & FABRICATION CODE	TEMA	TEMA	TEMA	TEMA

DWG NUMBER	TITLE
SK-13186-51	TITLE SHEET/DRAWING INDEX – PROCESS

REFERENCE DRAWINGS

RE-ISSUED FOR REVIEW
NOT FOR CONSTRUCTION

TJCROSS ENGINEERS

T.J. CROSS AUTOCAD CONTROL
SCALE: NONE
FILE: 13186/SK1318656
PLOT AT: 1:1
LAYER(S): AERA
ENGINEER: WES
CHANGED BY: AMW
DATE STARTED: 09/02/13
LAST CHANGED: 01/20/16

DATE	REV	DESCRIPTION	BY	APPR	AERA ENG
01/20/16	E2	REVISED IFR	CJF	SMH	EWP
07/18/14	E	ISSUED FOR REVIEW	OIC	SMH	EWP
06/24/14	D	REVISED PER AERA REVIEW	WES	SMH	EWP
05/19/14	C	REVISED IFR	CJF	SMH	EWP
04/08/14	B	RE-ISSUED PER AERA COMMENTS	CJF	SMH	EWP
10/24/13	A	ISSUED FOR REVIEW	CJF	SMH	EWP

AERA

PROCESS FLOW DIAGRAM – OCP 2 COALESCER
FIELD REDEVELOPMENT PROJECT
SECTION 30 T9N R32W
EAST CAT CANYON FIELD – SANTA BARBARA COUNTY – CA

AERA ENGINEER: ERIC PAULSON
DATE: 09/13/13
SCALE: NONE
CO. ENGINEER: TJ CROSS ENGINEERS, INC.
ORIGINAL DWG NO.
PROJ. MGR: ALI GOKGOZ
DESIGNED BY: TJ CROSS ENGINEERS INC.
DRAFTED BY: OLIVIA CASTRO
ECCN NO.
CAD FILE NO. SK1318656

NO. SK-13186-56
REV. E2

:FUNCTIONAL LOCATION NO.

STREAM DESCRIPTION / PROCESS PARAMETER (OPERATING)	110	111	112	120	210	211	811																	
	COOL HEAT MEDIUM TO TRIM COOLERS	COOL HEAT MEDIUM FROM TRIM COOLERS	COOL HEAT MEDIUM TO CIRCULATION PUMPS	COOL HEAT MEDIUM TO OCP COOLERS	WARM HEAT MEDIUM TO OCP LCO HEATERS	COOL HEAT MEDIUM FROM OCP LCO HEATERS	COOL HEAT MEDIUM RETURN FROM SGS																	
OIL (BPD)																								
WATER\ STEAM (BPD)																								
GLYCOL (BPD)	29,607	30,408	30,408	30,408	801	801	30,408																	
NON-CONDEN. GAS (MMSCFD)																								
WATER SG. (W/60 F REF.)																								
GAS MW																								
PRESSURE (PSIG)	180	10	10	250	197	180	197																	
TEMPERATURE (°F)	211	160	160	160	211	100	211																	
PIPE SIZE (IN.)	8	8	8	8	2	2	8																	
PIPE MATERIAL/SPEC.	1CS2501	1CS2501	1CS2501	1CS2501	1CS2501	1CS2501	1CS2501																	

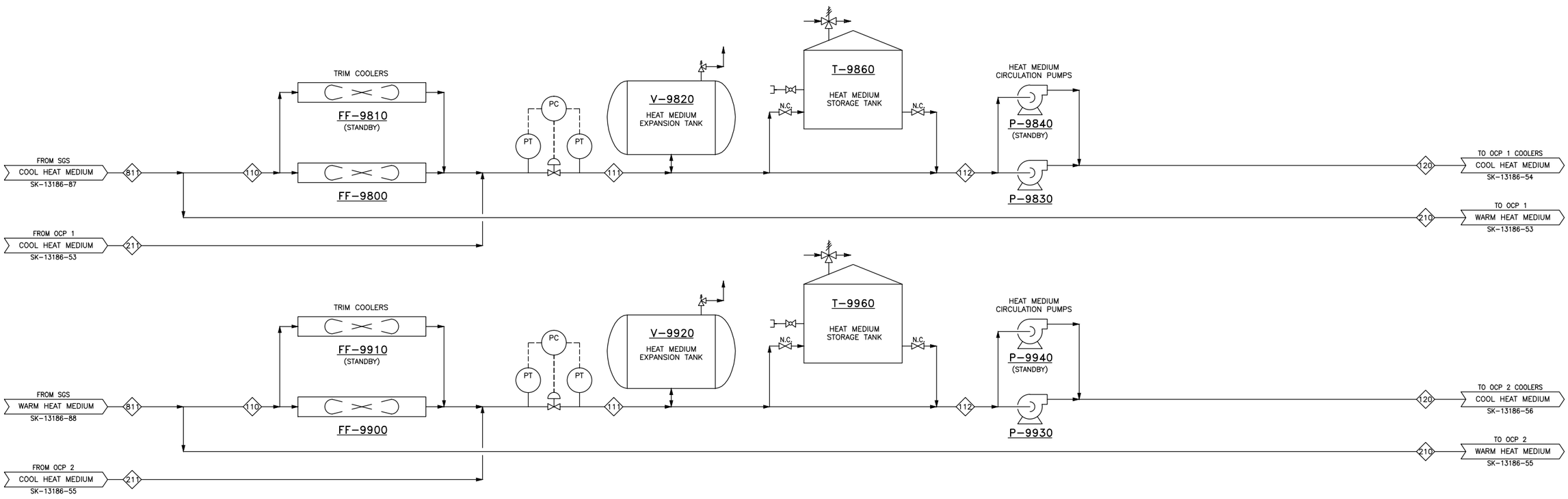

ITEM	VESSELS	ITEM	FIN-FAN	ITEM	PUMPS	ITEM	TANK
	V-9820/9920		FF-9800/9810/9900/9910		P-9830/9840/9930/9940		T-9860/9960
SERVICE	HEAT MEDIUM EXPANSION	SERVICE	HEAT MEDIUM TRIM COOLING	SERVICE	HEAT MEDIUM CIRCULATION	SERVICE	HEAT MEDIUM STORAGE
DIMENSIONS	5'-0"Ø x 15'-0" S/S	DUTY (MMBTU/HR)	11.3	DESIGN CAPACITY (GPM)	920	DIMENSIONS	15'-6"Ø x 24'-0"
OPERATING/DESIGN PRESS (PSIG)	10 / 150	PROCESS DP (PSI)/FLOW (LBS/HR)	5 / 240,000	DESIGN HEAD (PSI)	240	OPERATE/DESIGN PRESSURE (OSIG)	-1.0 / 6.0
OPERATING/DESIGN TEMP (°F)	160 / 350	AIRFLOW (SCFM)/TEMPIN/TEMPOUT (°F)	99,675 / 80 / 183	OPERATING/DESIGN TEMP (°F)	160 / 200	OPERATE/DESIGN TEMPERATURE (F)	170 / 250
DESIGN FLOW-GAS (MMSCFD)		PROCESS TEMP IN/OUT/ DESIGN (°F)	211 / 160 / 250	NPSHA/VAPOR PRESSURE (PSIA)		HOLDING CAPACITY (BBL)	750
DESIGN FLOW-LIQUID (BPD)		OPERATE/DESIGN PRESSURE (PSIG)	180 / 250	BH/HP/SG	250		
HOLDING CAPACITY (BBL)	50	FAN HP / # OF FANS	25 / 1	SKID DIMENSIONS			
		DIMENSIONS	16' x 14'			REMARKS	
DESIGN & FABRICATION CODE	ASME SEC. VIII	DESIGN & FABRICATION CODE	API 661	DESIGN & FABRICATION CODE	ANSI B73.1	DESIGN & FABRICATION CODE	API 650

DWG NUMBER	TITLE
SK-13186-51	TITLE SHEET/DRAWING INDEX – PROCESS

REFERENCE DRAWINGS

ISSUED FOR REVIEW
NOT FOR CONSTRUCTION

TJCROSS ENGINEERS

T.J. CROSS AUTOCAD CONTROL
SCALE: NONE
PLOT AT: 1:1
ENGINEER: WES
DATE STARTED: 11/21/13
FILE: 13186/SK1318697
LAYER(S): AERA
CHANGED BY: OIC
LAST CHANGED: 07/18/14

DATE	REV	DESCRIPTION	BY	APPR	AERA ENG
07/18/14	E	ISSUED FOR REVIEW	OIC	SMH	EWP
06/24/14	D	REVISED PER AERA REVIEW	WES	SMH	EWP
05/19/14	C	REVISED IFR	CJF	SMH	EWP
04/08/14	B	RE-ISSUED PER AERA COMMENTS	CJF	SMH	EWP
11/27/14	A	ISSUED FOR REVIEW	JJM	SMH	EWP

AERA

PROCESS FLOW DIAGRAM – OCP – HEAT MEDIUM SYSTEM
FIELD REDEVELOPMENT PROJECT
SECTION 30 T9N R32W
EAST CAT CANYON FIELD – SANTA BARBARA COUNTY – CA

AERA ENGINEER: ERIC PAULSON
CO. ENGINEER: TJ CROSS ENGINEERS, INC.
PROJ. MGR: ALI GOKGOZ
DESIGNED BY: TJ CROSS ENGINEERS INC.
DRAFTED BY: OLIVIA CASTRO
ECCN NO.

DATE: 09/13/13
SCALE: NONE
ORIGINAL DWG NO.
NO. SK-13186-97
REV. E
CAD FILE NO. SK1318697

:FUNCTIONAL LOCATION NO.

Stream Description / Process Parameter (OPERATING)	909 COS/LOS TVR DISCHARGE GAS TO SOUR GAS SCRUBBER	924 WATER PLANT TVR DISCHARGE GAS TO SOUR GAS SCRUBBER	931 WCP TANK VAPORS TO TVR COOLER	932 WCP TANK VAPORS AND OCP PRODUCED GAS TO OCP TVR SUCTION SCRUBBER	933 WCP TANK VAPORS AND OCP PRODUCED GAS TO OCP TVR COMPRESSORS	934 CONDENSATE FROM OCP TVR KO SCRUBBER	935 TANK VAPORS AND PRODUCED GAS TO OCP TVR COMPRESSOR	936 CONDENSATE FROM TVR SKID INLET SCRUBBER PUMP	937 TVR SKID COMPRESSOR DISCHARGE GAS TO DISCHARGE COOLER	938 COOLED TVR COMPRESSOR DISCHARGE GAS TO DISCHARGE SCRUBBER	940 CONDENSATE FROM TVR SKID DISCHARGE SCRUBBER	941 VR CONDENSATE TO SCP	970 OCP TVR DISCHARGE GAS TO PGTP
OIL (BPD)				2		2						2	
WATER\ STEAM (BPD)	3	3	43	97	23	74	23	0	23	23	20	94	3
CONDENSIBLE H.C. (BPD)													
NON-CONDEN. GAS (MMSCFD)	0.4230	0.4230	0.8460	0.8460	0.8460	0.8460	0.8460		0.8460	0.8460			0.8460
WATER SG. (W/60 F REF.)			1.003	1.003		1.003		1.003			1.003	1.003	
GAS MW	18.4	18.4	18.4	18.4	18.4	18.4	18.4		18.4	18.4			18.4
PRESSURE (PSIG)	30	30	0	0	0	0	0	30	35	30	30	30	30
TEMPERATURE (°F)	120	120	180	120	120	120	120	120	321	120	120	120	120
LINE SIZE (IN)	4	4	10	14	10	2	8	1	8	8	2	2	8
PIPE MATERIAL/SPEC	1CS2S01	1CS2S01	1CS2S01	1CS2S01	1CS2S01	1CS2S01	1CS2S01	1CS2S01	1CS2S01	1CS2S01	1CS2S01	1CS2S01	1CS2S01

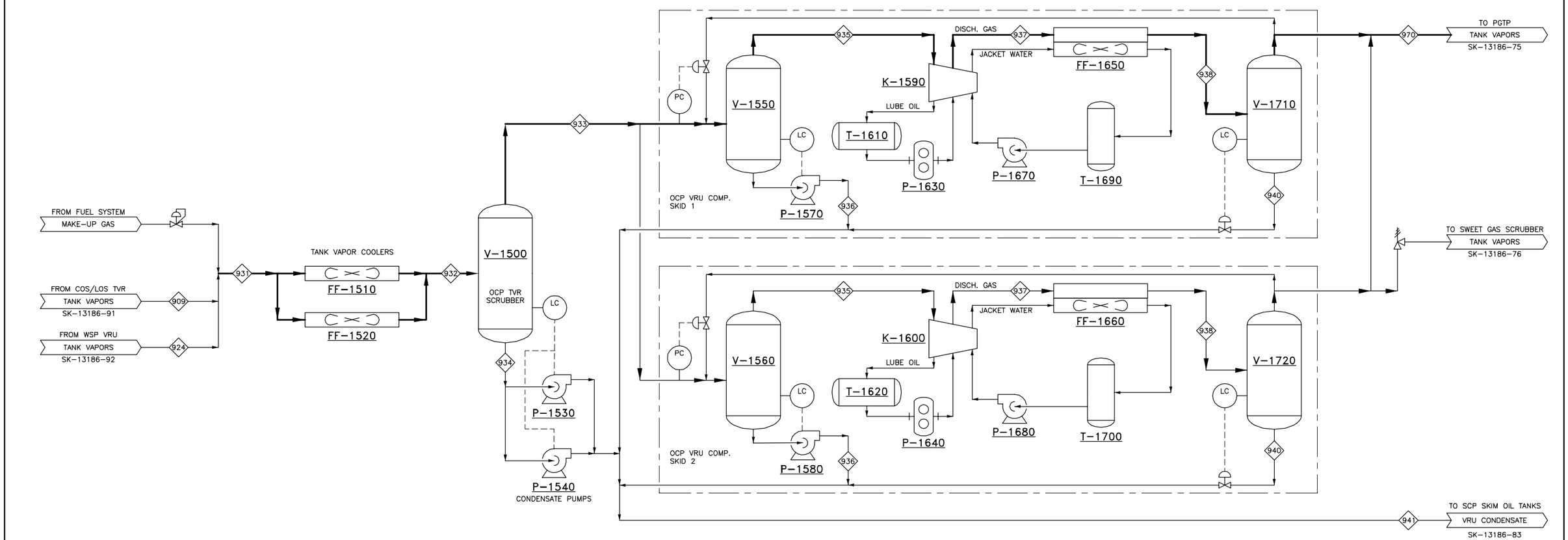

ITEM	VESSELS V-1500	V-1550/1560	V-1710/1720
SERVICE	OIL PLANT TVR INLET SCRUBBER	TVR SKID INLET SCRUBBER	TVR SKID DISCHARGE SCRUBBER
DIMENSIONS	36"Ø x 12'-0" S/S	36"Ø x 12'-0" S/S	24"Ø x 9'-0" S/S
OPERATING/DESIGN PRESS (PSIG)	0 / 150	0 / 150	30 / 150
OPERATING/DESIGN TEMP (°F)	120 / 350	120 / 350	120 / 350
HOLDING CAPACITY (BBL)			
DESIGN FLOW-LIQUID (BPD)			
HOLDING CAPACITY (GAL)			
REMARKS			
DESIGN & FABRICATION CODE	ASME SEC. VIII	ASME SEC. VIII	ASME SEC. VIII

ITEM	FIN-FANS FF-1510/1520	FF-1650/1660	
SERVICE	WCP VAPOR COOLING	DISCH. GAS COOLING SECTION	JACKET WATER COOLING SECTION
DUTY (MBTU/HR)	200	900	120
PROCESS DP (PSI)	0.5	1	0.5
AIRFLOW (SCFM)/TEMPIN/TEMPOUT (°F)			
PROCESS TEMP IN/OUT (°F)	180 / 120	120 / 321	137 / 120
OPERATE/DESIGN PRESSURE (PSIG)	0 / 150	35 / 150	- / 150
FAN HP / # OF FANS	5 / 1	10 / 1	
DIMENSIONS			
DESIGN & FABRICATION CODE	API 661	API 661	API 661

ITEM	PUMPS P-1530/1540	P-1570/1580	P-1630/1640	P-1670/1680
SERVICE	OIL PLANT TVR SCRUBBER COND. PUMP	TVR SKID SCRUBBER COND. PUMP	LUBE OIL	JACKET WATER
DESIGN CAPACITY (GPM)	15 GPM	15 GPM		15 GPM
DESIGN HEAD (PSI)	40	40	150	40
OPERATING/DESIGN TEMP (°F)	120 / 250	120 / 250	120 / 250	120 / 250
NPSHA/VAPOR PRESSURE (PSIA)				
BH/HP/SG	1.5	1.5	1.0	1.5
SKID DIMENSIONS				
DESIGN & FABRICATION CODE	ANSI B73.1	ANSI B73.1	API 676	ANSI B73.1

ITEM	TANKS T-1610/1620	T-1690/1700
SERVICE	LUBE OIL	JACKET WATER
DIMENSIONS	BY VENDOR	BY VENDOR
OPERATING/DESIGN PRESS (PSIG)		
OPERATING/DESIGN TEMP (°F)		
HOLDING CAPACITY (BBL)		
BH/HP/SG		
SKID DIMENSIONS		
DESIGN & FABRICATION CODE		

ITEM	COMPRESSORS K-1590/1600
SERVICE	OIL PLANT TANK VAPORS
DESIGN CAPACITY (MSCFD)	1,400
DESIGN DIFF. PRESS (PSI)	35
TEMP. IN/OUT (°F)	120 / 321
OP./DESIGN PRESS IN (PSIA)	14.7/14.2
OP./DESIGN PRESS OUT (PSIG)	30 / 35
HP	150
DESIGN & FABRICATION CODE	

SK-13186-51	TITLE SHEET/DRAWING INDEX – PROCESS
DWG NUMBER	TITLE

REFERENCE DRAWINGS

ISSUED FOR REVIEW
NOT FOR CONSTRUCTION

TJCROSS ENGINEERS

T.J. CROSS AUTOCAD CONTROL
SCALE: NONE
FILE: 13186/SK1318699
PLOT AT: 2:1
LAYER(S): AERA
ENGINEER: WES
CHANGED BY: AMW
DATE STARTED: 11/21/13
LAST CHANGED: 01/28/16

DATE	REV	DESCRIPTION	BY	APPR	AERA ENG
01/20/16	E2	REVISED IFR	CJF	SMH	EWP
11/02/15	E1	ISSUED FOR REVIEW	CJF	SMH	EWP
07/18/14	E	ISSUED FOR REVIEW	OIC	SMH	EWP
06/24/14	D	REVISED PER AERA REVIEW	CJF	SMH	EWP
05/19/14	C	REVISED IFR	CJF	SMH	EWP
04/08/14	B	RE-ISSUED PER AERA COMMENTS	CJF	SMH	EWP
11/27/14	A	ISSUED FOR REVIEW	CJF	SMH	EWP

AERA

PROCESS FLOW DIAGRAM – OCP – OCP TVR
FIELD REDEVELOPMENT PROJECT
SECTION 30 T9N R32W
EAST CAT CANYON FIELD – SANTA BARBARA COUNTY – CALIFORNIA

AERA ENGINEER: ERIC PAULSON
DATE: 11/21/2013
SCALE: NONE
CO. ENGINEER: TJ CROSS ENGINEERS, INC.
ORIGINAL DWG NO.
PROJ. MGR: ALI GOKGOZ
DESIGNED BY: TJ CROSS ENGINEERS, INC.
DRAFTED BY: OLIVIA CASTRO
ECCN NO.
NO. SK-13186-99
REV. E2
CAD FILE NO. SK1318699

:FUNCTIONAL LOCATION NO.

PROCESS PARAMETER (OPERATING) \ STREAM DESCRIPTION	200 LIGHT CRUDE OIL FROM UNLOADING RACKS	201 LIGHT CRUDE OIL FROM UNLOADING PUMPS	202 LIGHT CRUDE OIL TO LCO STORAGE TANKS	203 LIGHT CRUDE OIL TO TREATING BLEND PUMPS	204 LIGHT CRUDE OIL TO OIL TREATING PLANT	205 LIGHT CRUDE OIL TO PIPELINE BLEND PUMPS	206 LIGHT CRUDE OIL TO FUTURE PIPELINE STATION																	
OIL (BPD)				3,330	1,665																				
WATER\ STEAM (BPD)																									
INSTANTANEOUS DESIGN RATE (GPM)	300	300	600																						
NON-CONDEN. GAS (MMSCFD)																									
WATER SG. (W/60 F REF.)																									
GAS MW																									
PRESSURE (PSIG)	0	30	15	5	70	5																			
TEMPERATURE (°F)	80	80	80	80	80	80	80																		
PIPE SIZE (IN.)	6	4	8	4	3	6	4																		
PIPE MATERIAL/SPEC.	1CS2S01	1CS2S01	1CS2S01	1CS2S01	1CS2S01	1CS2S01	1CS2S01																		

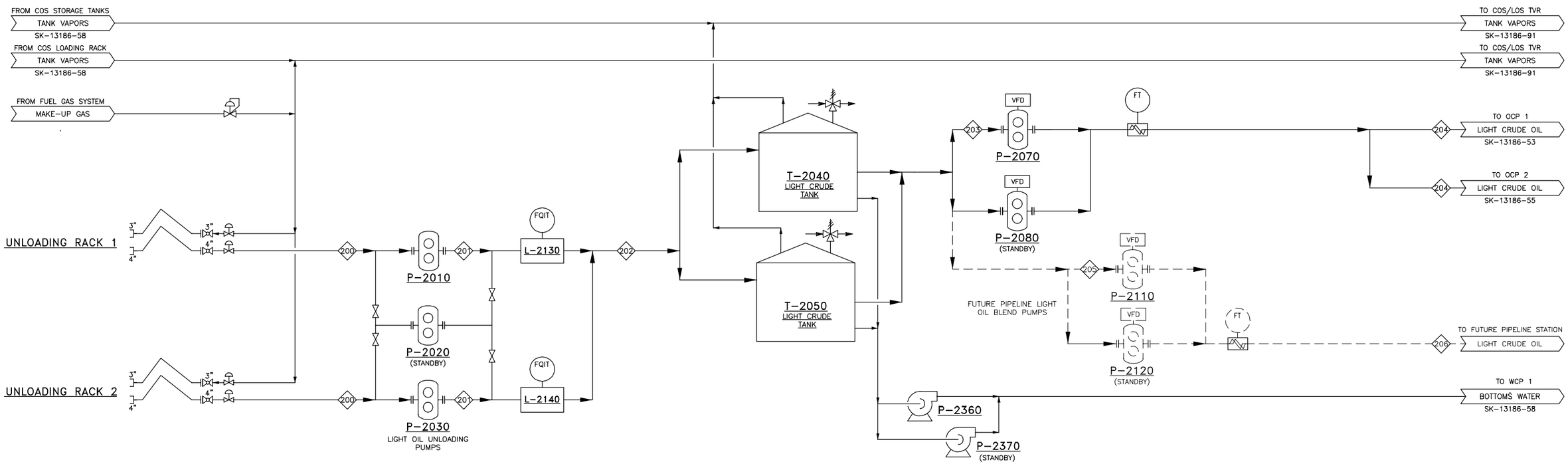

ITEM	TANKS	ITEM	PUMPS				ITEM	LACT
	T-2040/2050		P-2010/2020/2030	P-2070/2080	P-2110/2120	P-2360/2370		L-2130/2140
SERVICE	LCO STORAGE	SERVICE	LCO TRUCK UNLOADING	TREATING BLEND	PIPELINE BLEND	BOTTOMS WATER	SERVICE	LCO UNLOADING LACT METERING
DIMENSIONS	44'-0" Ø x 24'-0" H	DESIGN CAPACITY (GPM/BPD)	300 GPM	100 GPM	200 GPM	100 GPM	OPERATING/DESIGN FLOW RATE (GPM)	300 / 400
OPERATE/DESIGN PRESSURE (OSIG)	-1.0 / 6.0	DESIGN HEAD (PSI)	50	85	130	50	OPERATING/DESIGN PRESSURE (PSIG)	85 / 285
OPERATE/DESIGN TEMPERATURE (F)	80 / 250	OPERATING/DESIGN TEMP (°F)	120 / 250	80 / 250	80 / 250	80 / 250	OPERATING/DESIGN TEMPERATURE (°F)	180 / 250
HOLDING CAPACITY (BBL)	6,500	NPSHA/VAPOR PRESSURE (PSIA)					METER SIZE	4"
		HP	15	10	20	5	SKID DIMENSIONS	
		SKID DIMENSIONS	18" x 92"	15" x 64"	15" x 92"	12" x 45"		
REMARKS								

DWG NUMBER	TITLE
SK-13186-51	TITLE SHEET/DRAWING INDEX – PROCESS

REFERENCE DRAWINGS

RE-ISSUED FOR REVIEW
NOT FOR CONSTRUCTION

TJCROSS ENGINEERS

T.J. CROSS AUTOCAD CONTROL
SCALE: NONE
PLOT AT: 1:1
ENGINEER: WES
DATE STARTED: 09/02/13
FILE: 13186/SK1318657
LAYER(S): AERA
CHANGED BY: AMW
LAST CHANGED: 01/20/16

DATE	REV	DESCRIPTION	BY	APPR	AERA ENG
01/20/16	E2	REVISED IFR	AMW	SMH	EWP
07/18/14	E	ISSUED FOR REVIEW	OIC	SMH	EWP
06/24/14	D	REVISED PER AERA REVIEW	CJF	SMH	EWP
05/19/14	C	REVISED IFR	CJF	SMH	EWP
04/08/14	B	RE-ISSUED PER AERA COMMENTS	CJF	SMH	EWP
11/27/13	A	ISSUED FOR REVIEW	CJF	SMH	EWP

AERA

PROCESS FLOW DIAGRAM – LOS
FEILD REDEVELOPMENT PROJECT
SECTION 30 T9N R32W
EAST CAT CANYON FIELD – SANTA BARBARA COUNTY – CA

AERA ENGINEER: ERIC PAULSON
CO. ENGINEER: TJ CROSS ENGINEERS, INC.
PROJ. MGR: ALI GOKGOZ
DESIGNED BY: TJ CROSS ENGINEERS INC.
DRAFTED BY: OLIVIA CASTRO
ECCN NO.

DATE: 09/13/13
SCALE: NONE
ORIGINAL DWG NO.
NO. SK-13186-57
REV. E2
CAD FILE NO. SK1318657

:FUNCTIONAL LOCATION NO.

PROCESS PARAMETER (OPERATING) / STREAM DESCRIPTION	29	64	216	219	220	221	222	223	224	225	226	227	228	662	718
	HEAVY CRUDE FROM TRAIN 1 COALESCER	HEAVY CRUDE FROM TRAIN 2 COALESCER	HEAVY CRUDE FROM STOCK OIL COOLERS TO OIL STORAGE	HEAVY CRUDE FROM CRUDE STORAGE TANK	HEAVY CRUDE TO TRUCK LACT CHARGE PUMP	HEAVY CRUDE FROM TRUCK LACT CHARGE PUMP	HEAVY CRUDE TO TRUCK LOADING RACK	REJECT OIL FROM TRUCK LOADING LACT	HEAVY CRUDE TO PIPELINE LACT CHARGE PUMP	HEAVY CRUDE TO PIPELINE LACT	STOCK OIL HEATER STEAM CONDENSATE TO SCP 1	CRUDE OIL TO TANK HEATER CIRCULATION PUMP	CRUDE OIL FROM TANK HEATER	WET STEAM TO STEAM STOCK OIL HEATER	HEAVY CRUDE FROM FLASH OIL TREATER (HOLD)
OIL (BPD)	6,659	6,659	13,330									5,143	5,143		12
WATER\ STEAM (BPD)	100	100	100								220			220	
INSTANTANEOUS DESIGN RATE (GPM)				1,200	300	300	300	1,200	500	500					
NON-CONDEN. GAS (MMSCFD)	0.0000	0.0000	0.0000							0					
WATER SG. (W/60 F REF.)	1.003	1.003	1.003							0					
GAS MW / STEAM QUALITY	40.7	40.7	40.7							0	0%			44%	
PRESSURE (PSIG)	25	25	25	5	5	90	60	5	5	135	250	5	10	250	
TEMPERATURE (°F)	190	190	190	190	190	190	190	190	190	190	406	155	190	406	
PIPE SIZE (IN.)	4	4	4	14	8	6	4	14	10	5	1	6	4	2	4
PIPE MATERIAL/SPEC.	1CS2501	1CS2501	1CS2501	1CS2501	1CS2501	1CS2501	1CS2501	1CS2501	1CS2501	1CS2501	3CS2501	1CS2501	1CS2501	3CS2501	1CS2501

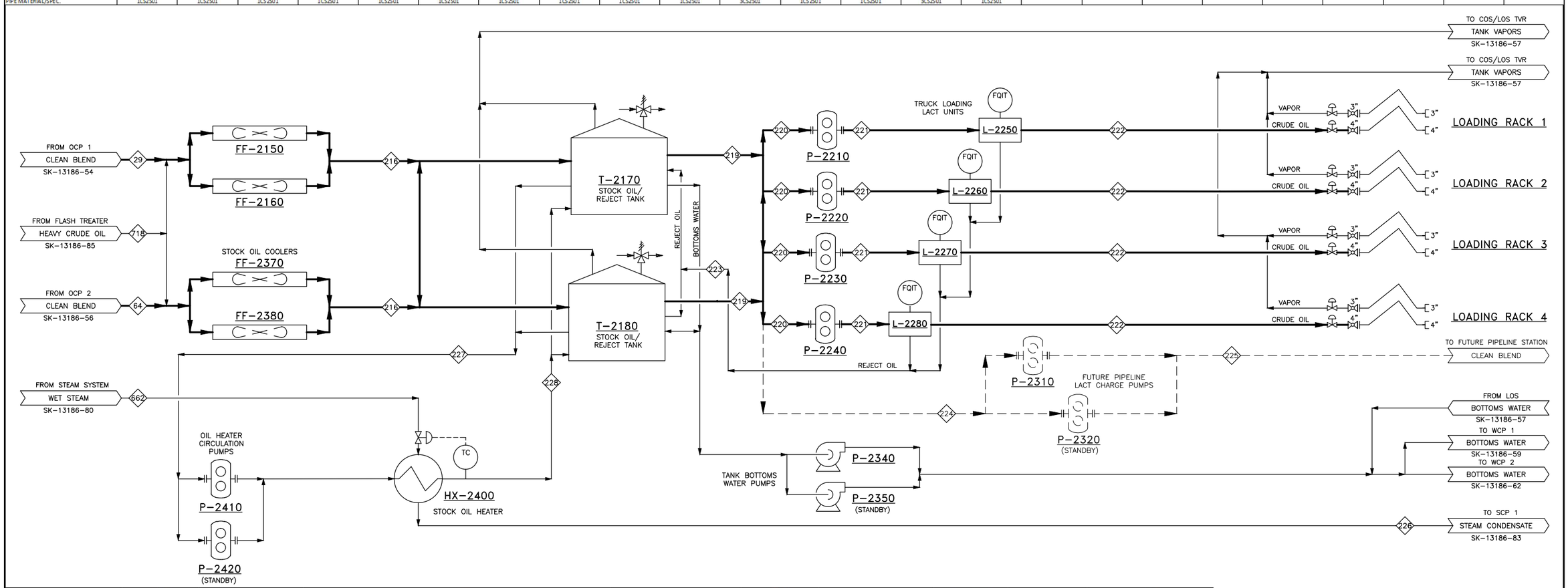

ITEM	TANKS	ITEM	PUMPS				ITEM	FIN-FAN	ITEM	HEAT EXCHANGERS	ITEM	LACT
	T-2170/2180		P-2210/2220/2230/2240	P-2310/2320	P-2340/2350	P-2410/2420		FF-2150/2160/2370/2380		HX-2400		L-2250/2260/2270/2280
SERVICE	STOCK OIL STORAGE/REJECT	SERVICE	TRUCK LACT CHARGE	PIPELINE LACT CHARGE	BOTTOMS WATER TRANSFER	TANK HEATER CIRCULATION	SERVICE	STOCK OIL COOLING	SERVICE	STEAM STOCK OIL HEATING	SERVICE	LOADING RACK LACT UNIT
DIMENSIONS	55'-0" Ø x 24'-0" H	DESIGN CAPACITY (GPM/BPD)	300 GPM	500 GPM	100 GPM	150 GPM	DUTY (MMBTU/HR)	1.75	DUTY (MMBTU/HR)	1.5	OPERATING/DESIGN FLO	300 / 400
DESIGN PRESSURE (OSIG)	-1.0 / 6.0	DESIGN HEAD (PSI)	85	130	50	85	PROCESS DP (PSI)/FLOW (LBS/HR)	5 / 96,000	PROCESS DP (PSI)	5	OPERATING/DESIGN PRE	85 / 285
OPERATE/DESIGN TEMPERATURE (F)	180 / 250	OPERATING/DESIGN TEMP. (°F)	190 / 250	190 / 250	190 / 250	160 / 250	AIRFLOW (SCFM)/TEMPIN/TEMPOUT (°F)	59,000 / 80 / 107	SHELL SIDE IN/OUT (F)	406 / 406	OPERATING/DESIGN TEM	180 / 250
HOLDING CAPACITY (BBL)	10,000	NPSHA/VAPOR PRESSURE (PSIA)					PROCESS TEMP IN/OUT/DESIGN (°F)	260 / 190 / 300	TUBE SIDE IN/OUT (F)	155 / 190	METER SIZE	4"
		HP	20	75	5	15	OPERATE/DESIGN PRESSURE (PSIG)	30 / 150	DESIGN PRESSURE (PSIG)	SH: 300 / T: 300	SKID DIMENSIONS	
	-	SKID DIMENSIONS	18" x 96"		12" x 45"	18" x 96"	FAN HP / # OF FANS/RPM	15 / 1	DESIGN TEMPERATURE (F)	450		
							DIMENSIONS	12' x 12'	DIMENSIONS			
DESIGN & FABRICATION CODE	API 650	DESIGN & FABRICATION CODE	API 676	API 676	ANSI B73.1	API 676	DESIGN & FABRICATION CODE	API 661	DESIGN & FABRICATION CODE	TEMA	REMARKS	API 11N

DWG NUMBER	TITLE
SK-13186-51	TITLE SHEET/DRAWING INDEX – PROCESS

REFERENCE DRAWINGS

ISSUED FOR REVIEW
NOT FOR CONSTRUCTION

TJCROSS ENGINEERS

T.J. CROSS AUTOCAD CONTROL
SCALE: NONE
PLOT AT: 1:1
ENGINEER: WES
DATE STARTED: 09/02/13
FILE: 13186/SK1318658
LAYER(S): AERA
CHANGED BY: CJF
LAST CHANGED: 11/02/15

DATE	REV	DESCRIPTION	BY	APPR	AERA ENG
11/02/15	E1	ISSUED FOR REVIEW	CJF	SMH	EWP
07/18/14	E	ISSUED FOR REVIEW	OIC	SMH	EWP
06/24/14	D	REVISED PER AERA REVIEW	WES	SMH	EWP
05/19/14	C	REVISED IFR	CJF	SMH	EWP
04/08/14	B	RE-ISSUED PER AERA COMMENTS	CJF	SMH	EWP
11/27/13	A	ISSUED FOR REVIEW	CJF	SMH	EWP

AERA

PROCESS FLOW DIAGRAM – COS
FEILD REDEVELOPMENT PROJECT
SECTION 30 T9N R32W
EAST CAT CANYON FIELD – SANTA BARBARA COUNTY – CA

AERA ENGINEER: ERIC PAULSON
CO. ENGINEER: TJ CROSS ENGINEERS, INC.
PROJ. MGR: ALI GOKGOZ
DESIGNED BY: TJ CROSS ENGINEERS INC.
DRAFTED BY: OLIVIA CASTRO
ECCN NO.

DATE: 09/13/13 SCALE: NONE
ORIGINAL DWG NO.
NO. SK-13186-58 REV. E1
CAD FILE NO. SK1318658

:FUNCTIONAL LOCATION NO.

STREAM DESCRIPTION / PROCESS PARAMETER (OPERATING)	32	300	301	302	303	304	306	308	309	310	342	710	727
	PRODUCED WATER FROM OCP 1	PRODUCED WATER TO PRODUCED WATER COOLERS	PRODUCED WATER FROM PRODUCED WATER COOLER	PRODUCED WATER TO CLARIFIER TANK	PRODUCED WATER TO IGF CHARGE PUMP	PRODUCED WATER TO IGF UNIT	DE-OILED WATER FROM IGF UNIT TO FILTER FEED TANK	SKIMS FROM IGF UNIT	SKIMMINGS TO SCP 1	OILY BRACKISH WATER FROM SOURCE WATER WELLS	SKIM WATER FROM WCP 1 BACKWASH SKIM PUMP	PRODUCED WATER FROM SCP 1	PRODUCED WATER FROM FLASH TREATER (HOLD)
OIL (BPD)													
WATER (BPD)	18,285	21,304	10,652	21,304	21,875	21,875	20,781	1,094	1094	571	450	2,477	92
CONDENSIBLE H.C. (BPD)													
NON-CONDEN. GAS (MMSCFD)	0.0000												
WATER SG. (W/60 F REF.)	1.003	1.003	1.003	1.003	1.003	1.003	1.003	1.003	1.003	1.003	1.003	1.003	1.003
GAS MW	41.2												
PRESSURE (PSIG)	25	25	10	10	0	20	8	8	8	15	25	25	
TEMPERATURE (°F)	180	180	180	180	180	180	180	180	180	80	175	180	
LINE SIZE (IN)	8	8	8	8	8	8	8	4	6	6	6	4	4
PIPE MATERIAL/SPEC	1CS2S01	1CS2S01	1CS2S01	1CS2S01	1CS2S01	1CS2S01	1CS2S01	1CS2S01	1CS2S01	1CS2S01	1CS2S01	1CS2S01	#REF!

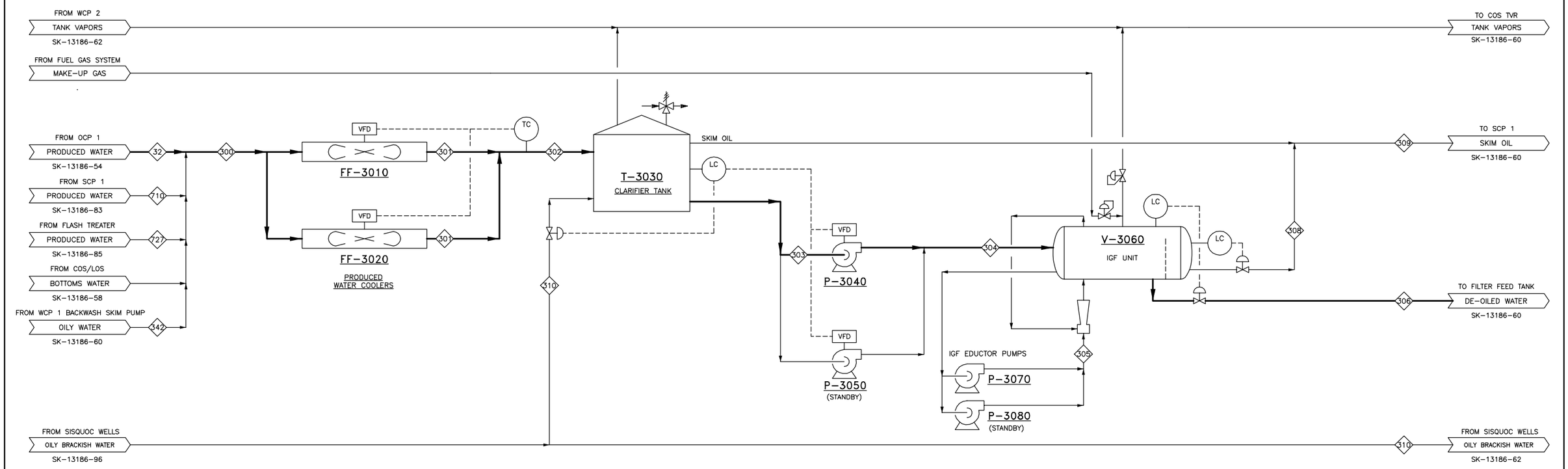

ITEM	FIN-FANS	ITEM	TANKS	ITEM	PUMPS		ITEM	VESSELS
	FF-3010/3020		T-3030		P-3040/3050	P-3070/3080		V-3060
SERVICE	PRODUCED WATER COOLING	SERVICE	CLARIFIER / WATER PLANT SURGE	SERVICE	IGF CHARGE PUMP	IGF EDUCTOR PUMP	SERVICE	IGF UNIT
DUTY (MMBTU/HR)	11.4	DIMENSIONS	38'-8"Ø x 24'-0" H	DESIGN CAPACITY (GPM/BPD)	875 GPM	350 GPM	DIMENSIONS	6'-0"Ø x 24'-0" S/S
PROCESS DP (PSI)	5	DESIGN PRESSURE (OSIG)	-1.0 / 6.0	DESIGN HEAD (PSI)	20	60	OPERATING/DESIGN PRESS (PSIG)	20 / 50
AIR TEMP IN/TEMP OUT (°F)	80 / 164	OPERATING/DESIGN TEMPERATURE (°F)	180 / 250	OPERATING/DESIGN TEMP (°F)	180 / 250	180 / 250	OPERATING/DESIGN TEMP (°F)	180 / 250
PROCESS TEMP IN/OUT/ DESIGN (°F)	260 / 180 / 260	HOLDING CAPACITY (BBL)	5,000	NPSHA/VAPOR PRESSURE (PSIA)			DESIGN FLOW-GAS (MMSCFD)	.
OPERATE/DESIGN PRESSURE (PSIG)	25/150			HP	30	25	DESIGN FLOW-LIQUID (BPD)	4,500 / 30,000
FAN HP / # OF FANS	20 / 1			SKID DIMENSIONS	26" x 62"	22" x 68"	HOLDING CAPACITY (BBL)	.
DIMENSIONS	14' X 14'							
DESIGN & FABRICATION CODE	API 661	REMARKS:	API 650	DESIGN & FABRICATION CODE	ANSI B73.1	ANSI B73.1	REMARKS:	ASME SEC. VIII

DWG NUMBER	TITLE
SK-13186-51	TITLE SHEET/DRAWING INDEX – PROCESS

REFERENCE DRAWINGS

ISSUED FOR REVIEW
NOT FOR CONSTRUCTION

TJCROSS ENGINEERS

T.J. CROSS AUTOCAD CONTROL
SCALE: NONE
PLOT AT: 1:1
ENGINEER: WES
DATE STARTED: 09/11/13
FILE: 13186/SK1318659
LAYER(S): AERA
CHANGED BY: AMW
LAST CHANGED: 01/20/16

DATE	REV	DESCRIPTION	BY	APPR	AERA ENG
01/20/16	E2	REVISED IFR	AMW	SMH	EWP
07/18/14	E	ISSUED FOR REVIEW	OIC	SMH	EWP
06/24/14	D	REVISED PER AERA REVIEW	CJF	SMH	EWP
05/19/14	C	REVISED IFR	CJF	SMH	EWP
04/08/14	B	RE-ISSUED PER AERA COMMENTS	CJF	SMH	EWP
11/27/13	A	ISSUED FOR REVIEW	CJF	SMH	EWP

AERA

PROCESS FLOW DIAGRAM – WCP 1 CLARIFIER TANK AND IGF UNIT
FIELD REDEVELOPMENT PROJECT
SECTION 30 T9N R32W
EAST CAT CANYON FIELD – SANTA BARBARA COUNTY – CA

AERA ENGINEER: ERIC PAULSON
CO. ENGINEER: TJCROSS ENGINEERS, INC.
PROJ. MGR: ALI GOKGOZ
DESIGNED BY: TJCROSS ENGINEERS INC.
DRAFTED BY: OLIVIA CASTRO
ECCN NO.

DATE: 09/13/13 SCALE: NONE
ORIGINAL DWG NO.
NO. SK-13186-59 REV. E2
CAD FILE NO. SK1318659

:FUNCTIONAL LOCATION NO.

STREAM DESCRIPTION / PROCESS PARAMETER (OPERATING)	306 DE-OILED WATER FROM IGF UNITS	309 SKIM OIL FROM WCP 1 CLARIFIER AND IGF	318 DE-OILED WATER TO FILTER CHARGE PUMP	320 DE-OILED WATER TO DEEP BED FILTER	323 FILTERED WATER TO FILTERED WATER TANK	324 BACKWASH WATER TO FILTER BACKWASH TANK	326 DE-OILED WATER TO DESANDER CHARGE PUMPS	327 JET WATER TO OCP 1 VESSEL DESANDERS	330 WCP 1 SKIM OIL TO SCP 1	331 JET WATER TO FILTER BACKWWASH TANK	332 JET WATER TO SCP1 SLUDGE TANK	340 FILTER BACKWASH SKIM WATER TO FILTER BACKWASH SKIM PUMP	342 FILTER BACKWASH SKIM WATER TO CLARIFIER TANK	344 FILTER BACKWASH OILY SOLIDS TO SOLIDS CONCENTRATING PLANT	◇	◇	◇	◇	◇	◇	◇	◇	◇	◇
OIL (BPD)																								
WATER (BPD)	20,781	1,094	20,246	20,246	19,796	450	535	321	1,094	107	107	450	450	107										
CONDENSIBLE H.C. (BPD)																								
NON-CONDEN. GAS (MMSCFD)																								
WATER SG. (W/60 F REF.)	1.003	1.003	1.003	1.003	1.003	1.003	1.003	1.003	1.003	1.003	1.003	1.003	1.003	1.003										
GAS MW																								
PRESSURE (PSIG)	8	8	0	60	20	20	0	75	8	35	35	0	25	20										
TEMPERATURE (°F)	180	180	175	175	175	175	175	175	180	175	175	175	175	175										
LINE SIZE (IN)	8	6	10	8	8	6	6	4	6	4	4	10	6	4										
PIPE MATERIAL/SPEC	1CS2S01	1CS2S01	1CS2S01	1CS2S01	1CS2S01	1CS2S01	1CS2S01	1CS2S01	1CS2S01	1CS2S01	1CS2S01	1CS2S01	1CS2S01	1CS2S01										

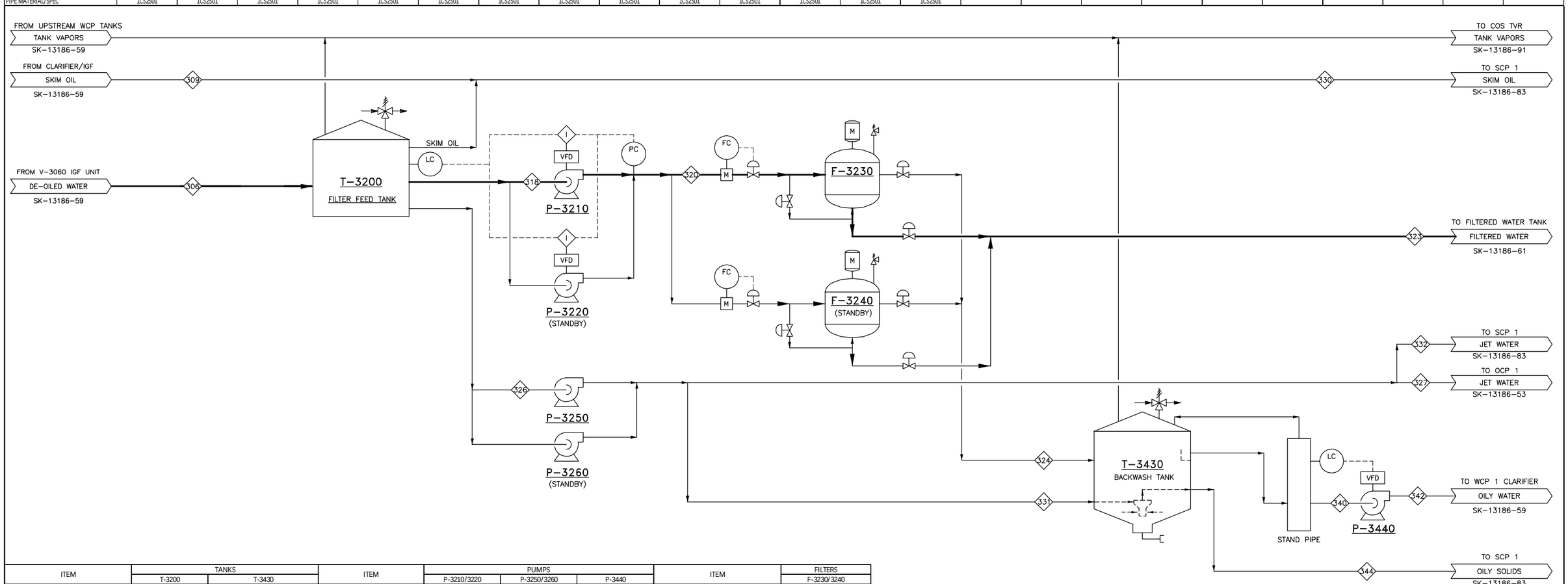

ITEM	TANKS T-3200	TANKS T-3430
SERVICE	FILTER FEED TANK	FILTER BACKWASH
DIMENSIONS	38'-8"ϕ x 24'-0" H	15'-6"Ø x 16'-0" (6' CONE) 24' OAH
DESIGN PRESSURE (OSIG)	-1.0 / 6.0	-1.0 / 6.0
OPERATING/DESIGN TEMPERATURE (°F)	180 / 210	180 / 250
HOLDING CAPACITY (BBL)	5,000	500
DESIGN & FABRICATION CODE	API 650	API 650

ITEM	PUMPS P-3210/3220	PUMPS P-3250/3260	PUMPS P-3440
SERVICE	FILTER FEED PUMPS	DESANDER PUMPS	BACKWASH SKIM PUMP
DESIGN CAPACITY (GPM/BPD)	730 GPM	150 GPM	550 GPM
DESIGN HEAD (PSI)	65	100	40
OPERATING/DESIGN TEMP (°F)	175 / 250	175 / 250	175 / 250
NPSHA/VAPOR PRESSURE (PSIA)			
HP	50	25	25
SKID DIMENSIONS	22" x 68"	26" x 62"	26" x 62"
DESIGN & FABRICATION CODE	ANSI B73.1	ANSI B73.1	ANSI B73.1

ITEM	FILTERS F-3230/3240
SERVICE	DEEP BED FILTERATION
DIMENSIONS	9'-0"ϕ 9'-0" S/S
OPERATING/DESIGN PRESSURE (PSIG)	65 / 150
OPERATING/DESIGN TEMPERATURE (°F)	180 / 200
DESIGN FLOW-GAS (MMSCFD)	-
DESIGN FLOW-LIQUID (BPD)	29,000
HOLDING CAPACITY (BBL)	-
REMARKS:	UNITS HAVE 40 HP MOTORS
DESIGN & FABRICATION CODE	ASME SEC. VIII

SK-13186-51	TITLE SHEET/DRAWING INDEX – PROCESS
DWG NUMBER	TITLE

REFERENCE DRAWINGS

RE-ISSUED FOR REVIEW
NOT FOR CONSTRUCTION

TJCROSS ENGINEERS

T.J. CROSS AUTOCAD CONTROL
SCALE: NONE
FILE: 13186/SK1318660
PLOT AT: 1:1
LAYER(S): AERA
ENGINEER: WES
CHANGED BY: AMW
DATE STARTED: 10/15/13
LAST CHANGED: 01/20/16

DATE	REV	DESCRIPTION	BY	APPR	AERA ENG
01/20/16	E2	REVISED IFR	AMW	SMH	EWP
07/18/14	E	ISSUED FOR REVIEW	OIC	SMH	EWP
06/24/14	D	REVISED PER AERA REVIEW	CJF	SMH	EWP
05/19/14	C	REVISED IFR	CJF	SMH	EWP
04/30/14	B	RE-ISSUED PER AERA COMMENTS	CJF	SMH	EWP
11/27/13	A	ISSUED FOR REVIEW	CJF	SMH	EWP

AERA

PROCESS FLOW DIAGRAM – WCP 1 FILTERS
FIELD REDEVELOPMENT PROJECT
SECTION 30 T9N R32W
EAST CAT CANYON FIELD – SANTA BARBARA COUNTY – CA

AERA ENGINEER: ERIC PAULSON
DATE: 10/15/13
SCALE: NONE
CO. ENGINEER: TJ CROSS ENGINEERS, INC.
ORIGINAL DWG NO.
PROJ. MGR: ALI GOKGOZ
DESIGNED BY: TJ CROSS ENGINEERS INC.
DRAFTED BY: OLIVIA CASTRO
ECCN NO.
NO. SK-13186-60
REV. E2
CAD FILE NO. SK1318660

:FUNCTIONAL LOCATION NO.

Stream Description / Process Parameter (OPERATING)	323	329	334	335	336	419	420	421
	FILTERED WATER FROM WALNUT SHELL FILTERS	FILTERED WATER FROM FILTERED WATER TANK	FILTERED WATER TO SOFTENER CHARGE PUMP	FILTERED WATER TO SAC SOFTENER BACKWASH/RINSE PUMPS	FILTERED WATER TO SAC SOFTENERS	BACKWASH WATER TO SAC POLISHING SOFTENER	BACKWASH WATER TO SAC PRIMARY SOFTENER	FAST RINSE TO SAC SOFTENERS
OIL (BPD)								
WATER (BPD)	19,796	19,796	18,315	1,481	18,315	275	561	645
CONDENSIBLE H.C. (BPD)								
NON-CONDEN. GAS (MMSCFD)								
WATER SG. (W/60 F REF.)	1.003	1.003	1.003	1.003	1.003	1.003	1.003	1.003
GAS MW								
PRESSURE (PSIG)	8	0	0	0	80	60	60	80
TEMPERATURE (°F)	175	170	170	170	170	170	170	170
LINE SIZE (IN)	8	14	10	10	6	8	8	8
PIPE MATERIAL/SPEC	1CS2501	1CS2501	1CS2501	1CS2501	1CS2501	1CS2501	1CS2501	1CS2501

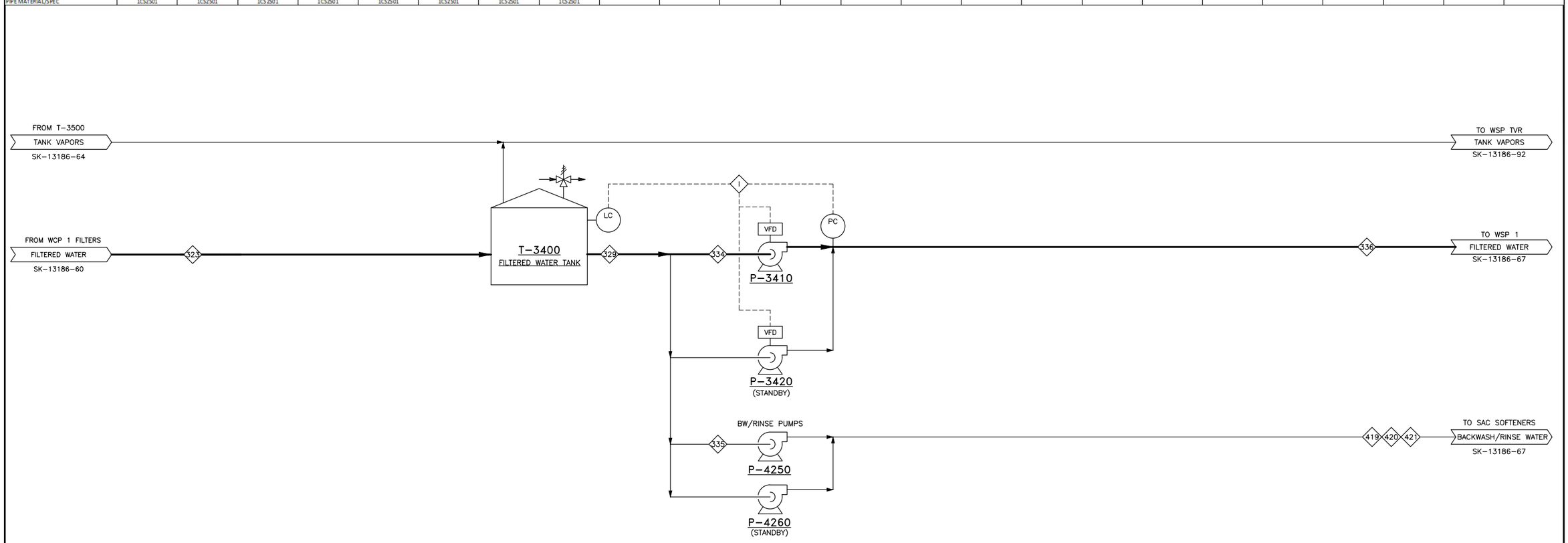

ITEM	TANKS	ITEM	PUMPS	
	T-3400		P-3410/3420	P-4250/4260
SERVICE	FILTERED WATER TANK	SERVICE	SOFTENER FEED PUMPS	SOFTENER BACKWASH/RINSE
DIMENSIONS	38'-8"ϕ x 24'-0" H	DESIGN CAPACITY (GPM/BPD)	550	800
DESIGN PRESS (OSIG)	-1.0 / 6.0	DESIGN HEAD (PSI)	80	60
OPERATING/DESIGN TEMP (°F)	180 /250	OPERATING/DESIGN TEMP (°F)	180 / 250	180 / 250
HOLDING CAPACITY (BBL)	5,000	NPSHA/VAPOR PRESSURE (PSIA)		
		HP	50	50
		SKID DIMENSIONS	22" x 68"	22" x 68"
DESIGN & FABRICATION CODE	API 650	DESIGN & FABRICATION CODE	ANSI B73.1	ANSI B73.1

DWG NUMBER	TITLE
SK-13186-51	TITLE SHEET/DRAWING INDEX – PROCESS

REFERENCE DRAWINGS

ISSUED FOR REVIEW
NOT FOR CONSTRUCTION

TJCROSS ENGINEERS

T.J. CROSS AUTOCAD CONTROL
SCALE: NONE
PLOT AT: 1:1
ENGINEER: WES
DATE STARTED: 10/16/13
FILE: 13186/SK1318661
LAYER(S): AERA
CHANGED BY: OIC
LAST CHANGED: 07/18/14

DATE	REV	DESCRIPTION	BY	APPR	AERA ENG
07/18/14	E	ISSUED FOR REVIEW	OIC	SMH	EWP
06/24/14	D	REVISED PER AERA REVIEW	CJF	SMH	EWP
05/19/14	C	REVISED IFR	CJF	SMH	EWP
04/08/14	B	RE-ISSUED FOR AERA COMMENTS	CJF	SMH	EWP
11/27/13	A	ISSUED FOR REVIEW	CJF	SMH	EWP

AERA

PROCESS FLOW DIAGRAM – WCP 1 FILTERED WATER STORAGE AND DISTRIBUTION
FIELD REDEVELOPMENT PROJECT
SECTION 30 T9N R32W
EAST CAT CANYON FIELD – SANTA BARBARA COUNTY – CA

AERA ENGINEER: ERIC PAULSON
CO. ENGINEER: TJ CROSS ENGINEERS, INC.
PROJ. MGR: ALI GOKGOZ
DESIGNED BY: TJ CROSS ENGINEERS, INC.
DRAFTED BY: OLIVIA CASTRO
ECCN NO.
DATE: 10/15/13
SCALE: NONE
ORIGINAL DWG NO.
NO. SK-13186-61
REV. E
CAD FILE NO. SK1318661

:FUNCTIONAL LOCATION NO.

Stream Description / Process Parameter (OPERATING)	71	300	301	302	303	304	306	308	309	310	342	710	727
	PRODUCED WATER FROM OCP 2	PRODUCED WATER TO PRODUCED WATER COOLERS	PRODUCED WATER FROM PRODUCED WATER COOLER	PRODUCED WATER TO CLARIFIER TANK	PRODUCED WATER TO IGF CHARGE PUMP	PRODUCED WATER TO IGF UNIT	DE-OILED WATER FROM IGF UNIT TO FILTER FEED TANK	SKIMS FROM IGF UNIT	SKIMMINGS TO SCP 2	OILY BRACKISH WATER FROM SOURCE WATER WELLS	SKIM WATER FROM WCP 2 BACKWASH SKIM PUMP	PRODUCED WATER FROM SCP 2	PRODUCED WATER FROM FLASH TREATER (HOLD)
OIL (BPD)													
WATER (BPD)	18,285	21,304	10,652	21,304	21,875	21,875	20,781	1,094	1,094	571	450	2,477	92
CONDENSIBLE H.C. (BPD)													
NON-CONDEN. GAS (MMSCFD)	0.0000												
WATER SG. (W/60 F REF.)	1.003	1.003	1.003	1.003	1.003	1.003	1.003	1.003	1.003	1.003	1.003	1.003	1.003
GAS MW	41.2												
PRESSURE (PSIG)	25	25	20	10	0	20	8	8	8	15	25	25	
TEMPERATURE (°F)	180	180	180	180	180	180	175	180	180	80	175	180	
LINE SIZE (IN)	8	8	8	8	8	8	8	6	6	6	6	6	4
PIPE MATERIAL/SPEC	1CS2S01	1CS2S01	1CS2S01	1CS2S01	1CS2S01	1CS2S01	1CS2S01	1CS2S01	1CS2S01	1CS2S01	1CS2S01	1CS2S01	#REF!

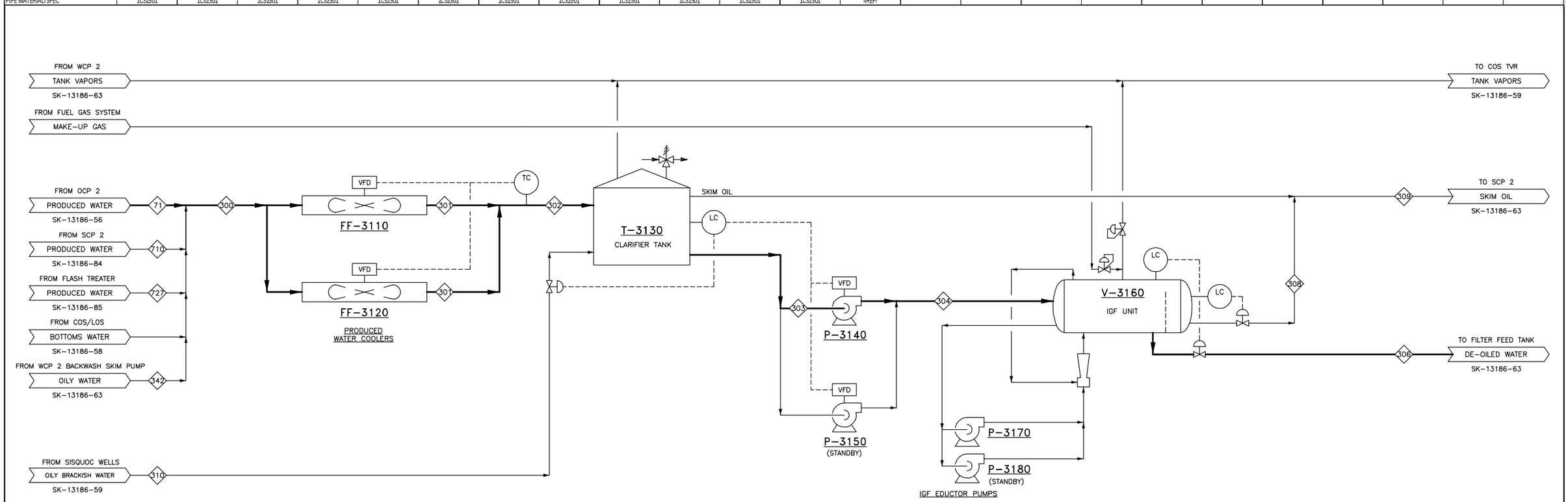

ITEM	FIN-FANS	ITEM	TANKS	ITEM	PUMPS		ITEM	VESSELS
	FF-3110/3120		T-3130		P-3140/3150	P-3170/3180		V-3160
SERVICE	PRODUCED WATER COOLING	SERVICE	CLARIFIER / WATER PLANT SURGE	SERVICE	IGF CHARGE PUMP	IGF EDUCTOR PUMP	SERVICE	IGF UNIT
DUTY (MMBTU/HR)	11.4	DIMENSIONS	38'-8"Ø x 24'-0" H	DESIGN CAPACITY (GPM/BPD)	875 GPM	350 GPM	DIMENSIONS	6'-0"Ø x 24'-0" S/S
PROCESS DP (PSI)	5	DESIGN PRESSURE (OSIG)	-1.0 / 6.0	DESIGN HEAD (PSI)	20	60	OPERATING/DESIGN PRESS (PSIG)	20 / 50
AIR TEMP IN/TEMP OUT (°F)	80 / 164	OPERATING/DESIGN TEMPERATURE (°F)	180 / 210	OPERATING/DESIGN TEMP (°F)	180 / 250	180 / 250	OPERATING/DESIGN TEMP (°F)	180 / 250
PROCESS TEMP IN/OUT/ DESIGN (°F)	260 / 180 / 260	HOLDING CAPACITY (BBL)	5,000	NPSHA/VAPOR PRESSURE (PSIA)			DESIGN FLOW-GAS (MMSCFD)	.
OPERATE/DESIGN PRESSURE (PSIG)	25/150			HP	30	25	DESIGN FLOW-LIQUID (BPD)	4,500 / 30,000
FAN HP / # OF FANS	20 / 1			SKID DIMENSIONS	26" x 62"	22" x 68"	HOLDING CAPACITY (BBL)	.
DIMENSIONS	14' X 14'							
DESIGN & FABRICATION CODE	API 661	REMARKS:	API 650	DESIGN & FABRICATION CODE	ANSI B73.1	ANSI B73.1	REMARKS:	ASME SEC. VIII

SK-13186-51	TITLE SHEET/DRAWING INDEX – PROCESS
DWG NUMBER	TITLE

REFERENCE DRAWINGS

ISSUED FOR REVIEW
NOT FOR CONSTRUCTION

TJCROSS ENGINEERS

T.J. CROSS AUTOCAD CONTROL

SCALE: NONE
PLOT AT: 1:1
ENGINEER: WES
DATE STARTED: 09/11/13
FILE: 13186/SK1318662
LAYER(S): AERA
CHANGED BY: AMW
LAST CHANGED: 01/20/16

DATE	REV	DESCRIPTION	BY	APPR	AERA ENG
01/20/16	E2	REVISED IFR	AMW	SMH	EWP
07/18/14	E	ISSUED FOR REVIEW	OIC	SMH	EWP
06/24/14	D	REVISED PER AERA REVIEW	CFH	SMH	EWP
05/19/14	C	REVISED IFR	CJF	SMH	EWP
04/08/14	B	RE-ISSUED PER AERA COMMENTS	CJF	SMH	EWP
11/27/13	A	ISSUED FOR REVIEW	CJF	SMH	EWP

AERA

PROCESS FLOW DIAGRAM – WCP 2 CLARIFIER TANK AND IGF UNIT
FIELD REDEVELOPMENT PROJECT
SECTION 30 T9N R32W
EAST CAT CANYON FIELD – SANTA BARBARA COUNTY – CA

AERA ENGINEER:	ERIC PAULSON	DATE: 09/13/13	SCALE: NONE
CO. ENGINEER:	TJCROSS ENGINEERS, INC.	ORIGINAL DWG NO.	
PROJ. MGR:	ALI GOKGOZ	NO. SK-13186-62	REV. E2
DESIGNED BY:	TJCROSS ENGINEERS INC.		
DRAFTED BY:	OLIVIA CASTRO		
ECCN NO.		CAD FILE NO. SK1318662	

:FUNCTIONAL LOCATION NO.

Stream Description / Process Parameter (OPERATING)	306 DE-OILED WATER FROM IGF UNITS	309 SKIM OIL FROM WCP 2 CLARIFIER AND IGF	318 DE-OILED WATER TO FILTER CHARGE PUMP	320 DE-OILED WATER TO DEEP BED FILTER	323 FILTERED WATER TO FILTERED WATER TANK	324 BACKWASH WATER TO FILTER BACKWASH TANK	326 DE-OILED WATER TO DESANDER CHARGE PUMPS	327 JET WATER TO OCP 2 VESSEL DESANDERS	330 WCP 2 SKIM OIL TO SCP 2	331 JET WATER TO FILTER BACKWWASH TANK	332 JET WATER TO SCP1 SLUDGE TANK	340 FILTER BACKWASH SKIM WATER TO FILTER BACKWASH SKIM PUMP	342 FILTER BACKWASH SKIM WATER TO CLARIFIER TANK	344 FILTER BACKWASH OILY SOLIDS TO SOLIDS CONCENTRATING PLANT	.	.	.	.	.	.	.	.	.	.
OIL (BPD)																								
WATER (BPD)	20,781	1,094	20,246	20,246	19,796	450	535	321	1,094	107	107	450	450	107										
CONDENSIBLE H.C. (BPD)																								
NON-CONDEN. GAS (MMSCFD)																								
WATER SG. (W/60 F REF.)	1.003	1.003	1.003	1.003	1.003	1.003	1.003	1.003	1.003	1.003	1.003	1.003	1.003	1.003										
GAS MW																								
PRESSURE (PSIG)	8	8	0	60	8	20	0	75	8	35	35	0	25	20										
TEMPERATURE (°F)	175	180	175	175	175	175	175	175	180	175	175	175	175	175										
LINE SIZE (IN)	8	6	10	8	8	6	6	4	6	4	4	10	6	4										
PIPE MATERIAL/SPEC	1CS2S01	1CS2S01	1CS2S01	1CS2S01	1CS2S01	1CS2S01	1CS2S01	1CS2S01	1CS2S01	1CS2S01	1CS2S01	1CS2S01	1CS2S01	1CS2S01										

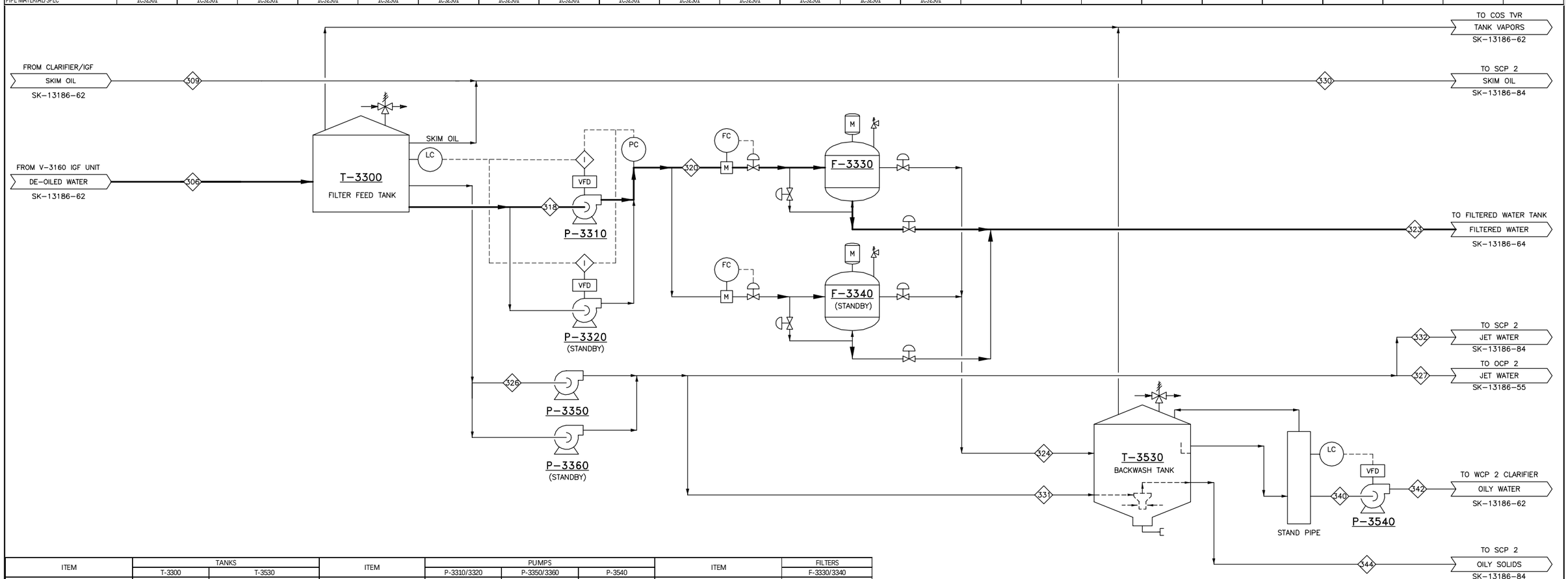

ITEM	TANKS		ITEM	PUMPS			ITEM	FILTERS
	T-3300	T-3530		P-3310/3320	P-3350/3360	P-3540		F-3330/3340
SERVICE	FILTER FEED TANK	FILTER BACKWASH	SERVICE	FILTER FEED PUMPS	DESANDER PUMPS	BACKWASH SKIM PUMP	SERVICE	DEEP BED FILTERATION
DIMENSIONS	38'-8"ϕ x 24'-0" H	15'-6"Ø x 16'-0" (6' CONE) 24' OAH	DESIGN CAPACITY (GPM/BPD)	730 GPM	150 GPM	550 GPM	DIMENSIONS	9'-0"ϕ 9'-0" S/S
DESIGN PRESSURE (OSIG)	-1.0 / 6.0	-1.0 / 6.0	DESIGN HEAD (PSI)	65	100	40	OPERATING/DESIGN PRESSURE (PSIG)	65 / 150
OPERATING/DESIGN TEMPERATURE (°F)	180 / 210	180 / 250	OPERATING/DESIGN TEMP (°F)	175 / 250	175 / 250	175 / 250	OPERATING/DESIGN TEMPERATURE (°F)	180 / 200
HOLDING CAPACITY (BBL)	5,000	500	NPSHA/VAPOR PRESSURE (PSIA)				DESIGN FLOW-GAS (MMSCFD)	.
			HP	50	25	25	DESIGN FLOW-LIQUID (BPD)	29,000
			SKID DIMENSIONS	22" x 68"	26" x 62"	26" x 62"	HOLDING CAPACITY (BBL)	.
							REMARKS:	UNITS HAVE 40 HP MOTORS
DESIGN & FABRICATION CODE	API 650	API 650	DESIGN & FABRICATION CODE	ANSI B73.1	ANSI B73.1	ANSI B73.1	DESIGN & FABRICATION CODE	ASME SEC. VIII

DWG NUMBER	TITLE
SK-13186-51	TITLE SHEET/DRAWING INDEX – PROCESS

REFERENCE DRAWINGS

RE-ISSUED FOR REVIEW
NOT FOR CONSTRUCTION

TJ CROSS ENGINEERS

T.J. CROSS AUTOCAD CONTROL
SCALE: NONE
FILE: 13186/SK1318663
PLOT AT: 1:1
LAYER(S): AERA
ENGINEER: WES
CHANGED BY: AMW
DATE STARTED: 10/15/13
LAST CHANGED: 01/20/16

DATE	REV	DESCRIPTION	BY	APPR	AERA ENG
01/20/16	E2	REVISED IFR	AMW	SMH	EWP
07/18/14	E	ISSUED FOR REVIEW	OIC	SMH	EWP
06/24/14	D	REVISED PER AERA REVIEW	CJF	SMH	EWP
05/19/14	C	REVISED IFR	CJF	SMH	EWP
04/08/14	B	RE-ISSUED PER AERA COMMENTS	CJF	SMH	EWP
11/27/13	A	ISSUED FOR REVIEW	CJF	SMH	EWP

AERA

PROCESS FLOW DIAGRAM – WCP 2 FILTERS
FIELD REDEVELOPMENT PROJECT
SECTION 30 T9N R32W
EAST CAT CANYON FIELD – SANTA BARBARA COUNTY – CA

AERA ENGINEER: ERIC PAULSON
DATE: 10/15/13
SCALE: NONE
CO. ENGINEER: TJ CROSS ENGINEERS, INC.
ORIGINAL DWG NO.
PROJ. MGR: ALI GOKGOZ
DESIGNED BY: TJ CROSS ENGINEERS INC.
DRAFTED BY: OLIVIA CASTRO
ECCN NO.
NO. SK-13186-63
REV. E2
CAD FILE NO. SK1318663

:FUNCTIONAL LOCATION NO.

Stream Description / Process Parameter (OPERATING)	323 FILTERED WATER FROM WALNUT SHELL FILTERS	329 FILTERED WATER FROM FILTERED WATER TANK	334 FILTERED WATER TO SOFTENER CHARGE PUMP	335 FILTERED WATER TO SAC SOFTENER BACKWASH/RINSE PUMPS	336 FILTERED WATER TO SAC SOFTENERS	419 BACKWASH WATER TO SAC POLISHING SOFTENER	420 BACKWASH WATER TO SAC PRIMARY SOFTENER	421 FAST RINSE TO SAC SOFTENERS
OIL (BPD)								
WATER (BPD)	19,796	19,796	18,315	1,481	18,315	275	561	645
CONDENSIBLE H.C. (BPD)								
NON-CONDEN. GAS (MMSCFD)								
WATER SG. (W/60 F REF.)	1.003	1.003	1.003	1.003	1.003	1.003	1.003	1.003
GAS MW								
PRESSURE (PSIG)	8	0	0	0	80	60	60	80
TEMPERATURE (°F)	175	170	170	170	170	170	170	170
LINE SIZE (IN)	8	14	10	10	6	8	8	8
PIPE MATERIAL/SPEC	1CS2501	1CS2501	1CS2501	1CS2501	1CS2501	1CS2501	1CS2501	1CS2501

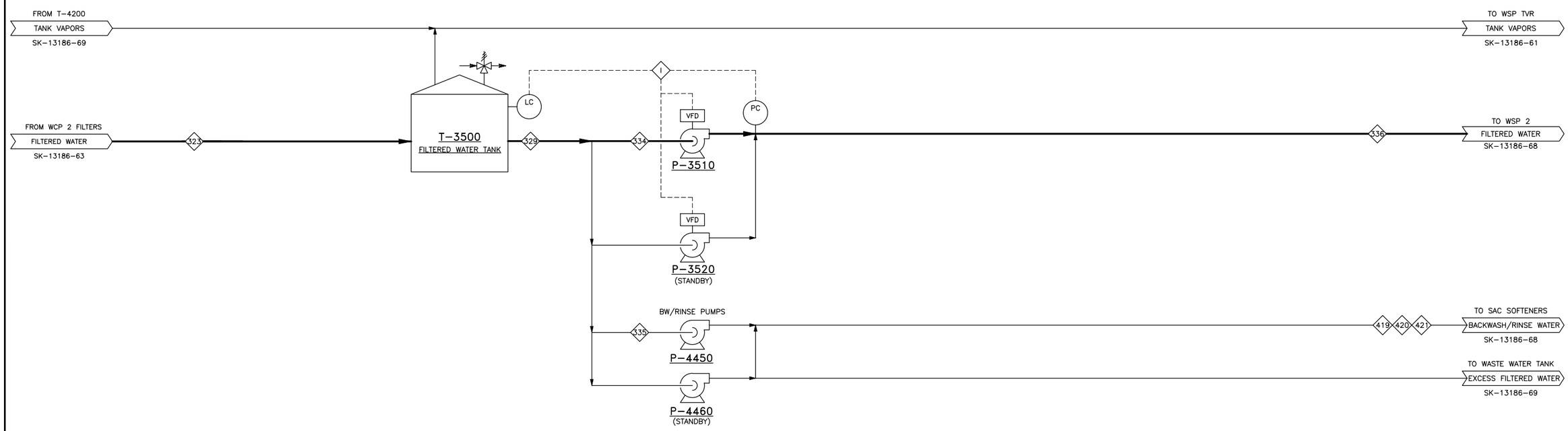

ITEM	TANKS T-3500	ITEM	PUMPS P-3510/3520	PUMPS P-4450/4460
SERVICE	FILTERED WATER TANK	SERVICE	SOFTENER FEED PUMPS	SOFTENER BACKWASH/RINSE
DIMENSIONS	38'-8"ϕ x 24'-0" H	DESIGN CAPACITY (GPM/BPD)	550	800
DESIGN PRESS (OSIG)	-1.0 / 6.0	DESIGN HEAD (PSI)	80	60
OPERATING/DESIGN TEMP (°F)	180 /250	OPERATING/DESIGN TEMP (°F)	180 / 250	180 / 250
HOLDING CAPACITY (BBL)	5,000	NPSHA/VAPOR PRESSURE (PSIA)		
		HP	50	50
		SKID DIMENSIONS	22" x 68"	22" x 68"
DESIGN & FABRICATION CODE	API 650	DESIGN & FABRICATION CODE	ANSI B73.1	ANSI B73.1

DWG NUMBER	TITLE
SK-13186-51	TITLE SHEET/DRAWING INDEX – PROCESS

REFERENCE DRAWINGS

ISSUED FOR REVIEW
NOT FOR CONSTRUCTION

TJCROSS ENGINEERS

T.J. CROSS AUTOCAD CONTROL
SCALE: NONE
PLOT AT: 1:1
ENGINEER: WES
DATE STARTED: 10/16/13
FILE: 13186/SK1318664
LAYER(S): AERA
CHANGED BY: OIC
LAST CHANGED: 07/18/14

DATE	REV	DESCRIPTION	BY	APPR	AERA ENG
07/18/14	E	ISSUED FOR REVIEW	OIC	SMH	EWP
06/24/14	D	REVISED PER AERA REVIEW	CJF	SMH	EWP
05/19/14	C	REVISED IFR	CJF	SMH	EWP
04/08/14	B	RE-ISSUED FOR AERA COMMENTS	CJF	SMH	EWP
11/27/13	A	ISSUED FOR REVIEW	CJF	SMH	EWP

AERA

PROCESS FLOW DIAGRAM – WCP 2 FILTERED WATER STORAGE AND DISTRIBUTION
FIELD REDEVELOPMENT PROJECT
SECTION 30 T9N R32W
EAST CAT CANYON FIELD – SANTA BARBARA COUNTY – CA

AERA ENGINEER: ERIC PAULSON
CO. ENGINEER: TJ CROSS ENGINEERS, INC.
PROJ. MGR: ALI GOKGOZ
DESIGNED BY: TJ CROSS ENGINEERS, INC.
DRAFTED BY: OLIVIA CASTRO
ECCN NO.

DATE: 10/15/13
SCALE: NONE
ORIGINAL DWG NO.
NO. SK-13186-64
REV. E
CAD FILE NO. SK1318664

:FUNCTIONAL LOCATION NO.

Process Parameter (OPERATING) \ Stream Description	336 FILTERED WATER TO SAC/SAC SOFTENERS	346 FILTERED WATER TO SAC PRIMARY SOFTENER	347 SOFTENED WATER FROM SAC POLISHING SOFTENER	348 SAC SOFTENED WATER TO WAC POLISHER	349 SOFT WATER FROM WAC POLISHER	401 SOFT WATER TO SOFT WATER STORAGE TANK	417 18% BRINE TO SAC POLISHING SOFTENER	418 BLOCKING WATER TO PRIMARY SAC SOFTENER	419 BACKWASH WATER TO SAC POLISHING SOFTENER	420 BACKWASH WATER TO SAC PRIMARY SOFTENER	421 FAST RINSE TO SAC SOFTENERS	422 BACKWASH WATER FROM SAC PRIMARY SOFTENER	423 BACKWASH WATER FROM SAC POLISHING SOFTENER	424 SPENT BRINE FROM SAC SOFTENERS	425 FAST RINSE FROM SAC SOFTENERS	426 BRINE DISPLACEMENT WATER TO SAC SOFTENERS	427 BRINE DISPLACEMENT FROM SAC SOFTENERS	428 SAC REGENERATION WASTE TO WATER INJECTION TANK	◇	◇	◇	◇	◇	◇
BRINE (BPD)							504							617										
BRINE CONCENTRATION (WT %)							18%	0%						15%										
WATER (BPD)	18,315	18,315	18,315	18,315	18,315	18,315		113	275	561	645	561	275		645	482	482	2,580						
NON-CONDEN. GAS (MMSCFD)																								
WATER SG. (W/60 F REF.)	1.003	1.003	1.003	1.003	1.003	1.003		1.003	1.003	1.003	1.003	1.003	1.003	1.116	1.003	1.003	1.003	1.003						
GAS MW																								
PRESSURE (PSIG)	65	60	45	40	20	20	80	80	60	60	80	20	20	20	80	60	60	20						
TEMPERATURE (°F)	170	170	170	170	170	170	170	170	170	170	170	170	170	170	170	170	170	170						

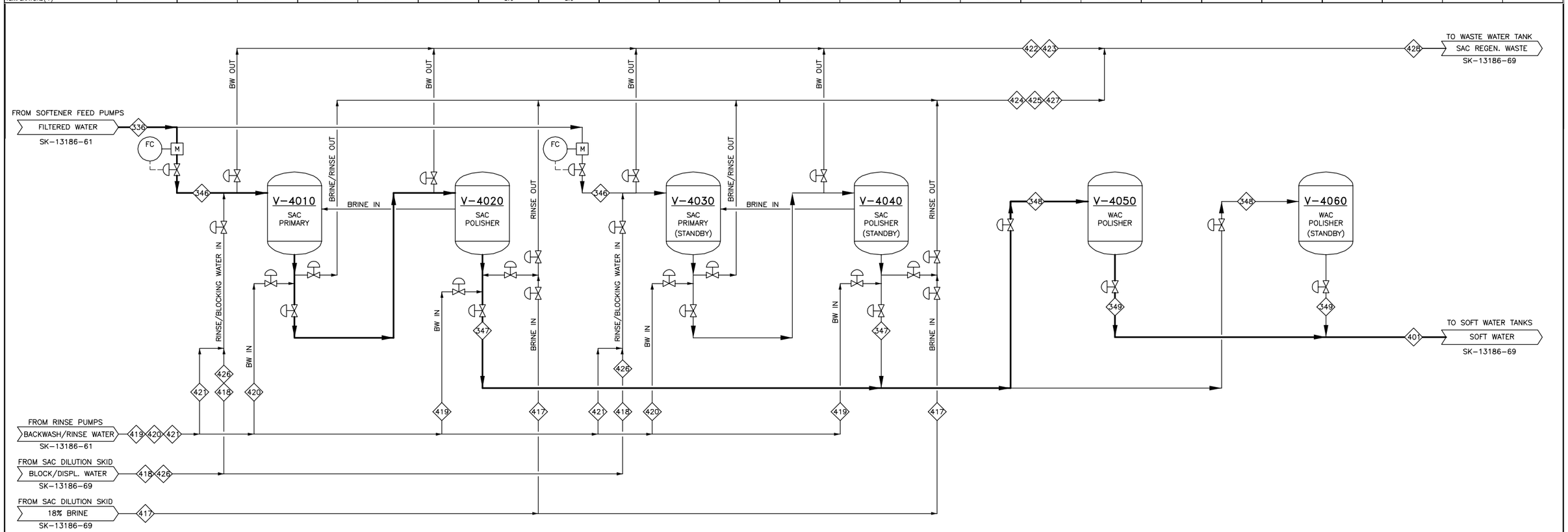

ITEM	VESSELS		
	V-4010/4030	V-4020/4040	V-4050/4060
SERVICE	SAC PRIMARY SOFTENER	SAC POLISHER SOFTENER	WAC POLISHER SOFTENER
DIMENSIONS	10'-0"Ø x 11'-0" S/S	7'-0"Ø x 11'-0" S/S	7'-0"Ø x 9'-0" S/S
OPERATING/DESIGN PRESS (PSIG)	80 / 100	60 / 100	40 / 100
OPERATING/DESIGN TEMP (°F)	180 / 239	180 / 239	180 / 239
RESIN VOLUME (FT3)	600	250	80
DESIGN FLOW-LIQUID (BPD)	18,500	18,500	18,500
HOLDING CAPACITY (GAL)			
DESIGN & FABRICATION CODE	ASME SEC. VIII	ASME SEC. VIII	ASME SEC. VIII

NOTES:

1. WAC SOFTENER RESIN TO BE REGENERATED OFF-SITE.

.

DWG NUMBER	TITLE
SK-13186-51	TITLE SHEET/DRAWING INDEX - PROCESS

REFERENCE DRAWINGS

ISSUED FOR REVIEW
NOT FOR CONSTRUCTION

TJCROSS ENGINEERS

T.J. CROSS AUTOCAD CONTROL
SCALE: NONE
FILE: 13186/SK1318667
PLOT AT: 1:1
LAYER(S): AERA
ENGINEER: WES
CHANGED BY: AMW
DATE STARTED: 10/16/13
LAST CHANGED: 01/20/16

DATE	REV	DESCRIPTION	BY	APPR	AERA ENG
01/20/16	E2	REVISED IFR	AMW	SMH	EWP
07/18/14	E	ISSUED FOR REVIEW	OIC	SMH	EWP
06/24/14	D	REVISED PER AERA REVIEW	CJF	SMH	EWP
05/19/14	C	REVISED IFR	CJF	SMH	EWP
04/08/14	B	RE-ISSUED PER AERA COMMENTS	CJF	SMH	EWP
11/27/13	A	ISSUED FOR REVIEW	CJF	SMH	EWP

AERA

PROCESS FLOW DIAGRAM - WSP 1 SOFTENERS
FIELD REDEVELOPMENT PROJECT
SECTION 30 T9N R32W
EAST CAT CANYON FIELD - SANTA BARBARA COUNTY - CA

AERA ENGINEER: ERIC PAULSON
DATE: 10/15/13
SCALE: NONE
CO. ENGINEER: TJ CROSS ENGINEERS, INC.
ORIGINAL DWG NO.
PROJ. MGR: ALI GOKGOZ
DESIGNED BY: TJ CROSS ENGINEERS, INC.
DRAFTED BY: OLIVIA CASTRO
ECCN NO.
NO. SK-13186-67
REV. E2
CAD FILE NO. SK1318667

:FUNCTIONAL LOCATION NO.

Process Parameter (OPERATING) \ Stream Description	336 FILTERED WATER TO SAC/SAC SOFTENERS	346 FILTERED WATER TO SAC PRIMARY SOFTENER	347 SOFTENED WATER FROM SAC POLISHING SOFTENER	348 SAC SOFTENED WATER TO WAC POLISHER	349 SOFT WATER FROM WAC POLISHER	401 SOFT WATER TO SOFT WATER STORAGE TANK	417 18% BRINE TO SAC POLISHING SOFTENER	418 BLOCKING WATER TO PRIMARY SAC SOFTENER	419 BACKWASH WATER TO SAC POLISHING SOFTENER	420 BACKWASH WATER TO SAC PRIMARY SOFTENER	421 FAST RINSE TO SAC SOFTENERS	422 BACKWASH WATER FROM SAC PRIMARY SOFTENER	423 BACKWASH WATER FROM SAC POLISHING SOFTENER	424 SPENT BRINE FROM SAC SOFTENERS	425 FAST RINSE FROM SAC SOFTENERS	426 BRINE DISPLACEMENT WATER TO SAC SOFTENERS	427 BRINE DISPLACEMENT FROM SAC SOFTENERS	428 SAC REGENERATION WASTE TO WATER INJECTION TANK	◇	◇	◇	◇	◇	◇
BRINE (BPD)							504							617										
BRINE CONCENTRATION (WT %)							18%	0%						15%										
WATER (BPD)	18,315	18,315	18,315	18,315	18,315	18,315		113	275	561	645	561	275		645	482	482	2,580						
NON-CONDEN. GAS (MMSCFD)																								
WATER SG. (W/60 F REF.)	1.003	1.003	1.003	1.003	1.003	1.003		1.003	1.003	1.003	1.003	1.003	1.003	1.116	1.003	1.003	1.003	1.003						
GAS MW																								
PRESSURE (PSIG)	80	60	45	40	20	20	80	80	60	60	80	20	20	20	80	60	60	20						
TEMPERATURE (°F)	170	170	170	170	170	170	170	170	170	170	170	170	170	170	170	170	170	170						

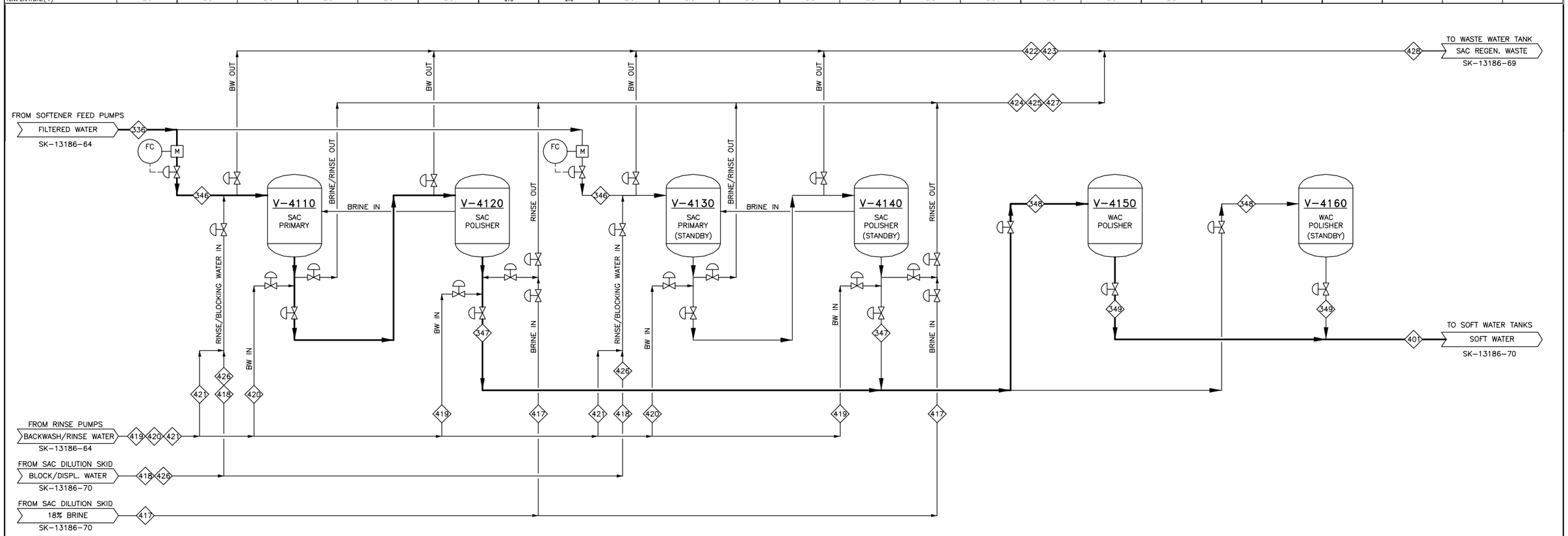

ITEM	VESSELS		
	V-4110/4130	V-4120/4140	V-4150/4160
SERVICE	SAC PRIMARY SOFTENER	SAC POLISHER SOFTENER	WAC POLISHER SOFTENER
DIMENSIONS	10'-0"Ø x 11'-0" S/S	7'-0"Ø x 11'-0" S/S	7'-0"Ø x 9'-0" S/S
OPERATING/DESIGN PRESS (PSIG)	80 / 100	60 / 100	40 / 100
OPERATING/DESIGN TEMP (°F)	180 / 239	180 / 239	180 / 239
HOLDING CAPACITY (BBL)			
DESIGN FLOW-LIQUID (BPD)	18,500	18,500	18,500
HOLDING CAPACITY (GAL)			
DESIGN & FABRICATION CODE	ASME SEC. VIII	ASME SEC. VIII	ASME SEC. VIII

NOTES:

1. WAC SOFTENER RESIN TO BE REGENERATED OFF-SITE.

.

SK-13186-51	TITLE SHEET/DRAWING INDEX - PROCESS
DWG NUMBER	TITLE

REFERENCE DRAWINGS

ISSUED FOR REVIEW
NOT FOR CONSTRUCTION

TJCROSS ENGINEERS

T.J. CROSS AUTOCAD CONTROL

SCALE: NONE
FILE: 13186/SK1318668
PLOT AT: 1:1
LAYER(S): AERA
ENGINEER: WES
CHANGED BY: AMW
DATE STARTED: 10/16/13
LAST CHANGED: 01/20/16

DATE	REV	DESCRIPTION	BY	APPR	AERA ENG
01/20/16	E2	REVISED IFR	AMW	SMH	EWP
07/18/14	E	ISSUED FOR REVIEW	OIC	SMH	EWP
06/24/14	D	REVISED PER AERA REVIEW	CJF	SMH	EWP
05/19/14	C	REVISED IFR	CJF	SMH	EWP
04/08/14	B	RE-ISSUED PER AERA COMMENTS	CJF	SMH	EWP
11/27/13	A	ISSUED FOR REVIEW	CJF	SMH	EWP

AERA

PROCESS FLOW DIAGRAM - WSP 2 SOFTENERS
FIELD REDEVELOPMENT PROJECT
SECTION 30 T9N R32W
EAST CAT CANYON FIELD - SANTA BARBARA COUNTY - CA

AERA ENGINEER: ERIC PAULSON
DATE: 10/15/13
SCALE: NONE
CO. ENGINEER: TJ CROSS ENGINEERS, INC.
ORIGINAL DWG NO.
PROJ. MGR: ALI GOKGOZ
DESIGNED BY: TJ CROSS ENGINEERS, INC.
DRAFTED BY: OLIVIA CASTRO
ECCN NO.
NO. SK-13186-68
REV. E2
CAD FILE NO. SK1318668

:FUNCTIONAL LOCATION NO.

Stream Description / Process Parameter (OPERATING)	401 SOFT WATER FROM WAC SOFTENERS	402 SOFT WATER FROM SOFT WATER TANKS	403 SOFT WATER TO STEAM SYSTEM FEED PUMPS	404 SOFT WATER TO STEAM GENERATORS AND SOFT WATER SYSTEM	406 SOFT WATER TO SULEROX PLANT	407 SOFT WATER TO SO2 SCRUBBERS	408 SOFT WATER TO PRODUCED GAS STEAM PLANT	409 SOFT WATER TO CENTRAL STEAM PLANT	410 SOFT WATER BRINE SYSTEM PUMPS	412 SOFT WATER TO SAC DILUTION SKID	415 BRINE TO SAC DILUTION SKID	417 18% BRINE TO SAC POLISHING SOFTENER	418 BLOCKING WATER TO SAC PRIMARY SOFTENER	426 BRINE DISPLACEMENT WATER TO SAC SOFTENERS	428 SAC REGENERATION WASTE FROM SAC SOFTENERS	430 WASTE WATER TO INJECTION PUMPS	431 WASTE WATER TO DISPOSAL WELLS	512 SULFEROX PURGE WATER WASTE	644 WASTE WATER FROM SO2 SCRUBBERS AND WESP	◇	◇	◇	◇	◇
BRINE (BPD)											329	504												
BRINE CONCENTRATION (WT %)											26%	18%	0%	0%		1%	1%	34	1,371					
WATER (BPD)	18,315	18,315	17,216	17,216	61	1,371	3,000	30,000	329	770			113	482	2,580	6,565	6,565							
NON-CONDEN. GAS (MMSCFD)																								
WATER SG. (W/60 F REF.)	1.003	1.003	1.003	1.003	1.003	1.003	1.003	1.003	1.003	1.003			1.003	1.003	1.003	1.007	1.007	1.003	1.003					
GAS MW																								
PRESSURE (PSIG)	8	0	0	230	70	50	230	74	0	80	80	80	80	60	20	0	1,800	9	9					
TEMPERATURE (°F)	170	170	170	170	160	160	170	170	170	170	170	170	170	170	170	170	170	106	160					
LINE SIZE (IN)	12	12	10	6.000	2	3	6	8	6	4	3	4	2	4	8	8	6	2	2					
PIPE MATERIAL/SPEC	15D0D01	15D0D01	15D0D01	35D0D01	15D0D01	15D0D01	35D0D01	35D0D01	15D0D01	15D0D01	15D0D01	15D0D01	15D0D01	15D0D01	15D0D01	1CS2501	1SCS2501	15D0D01	15D0D01					

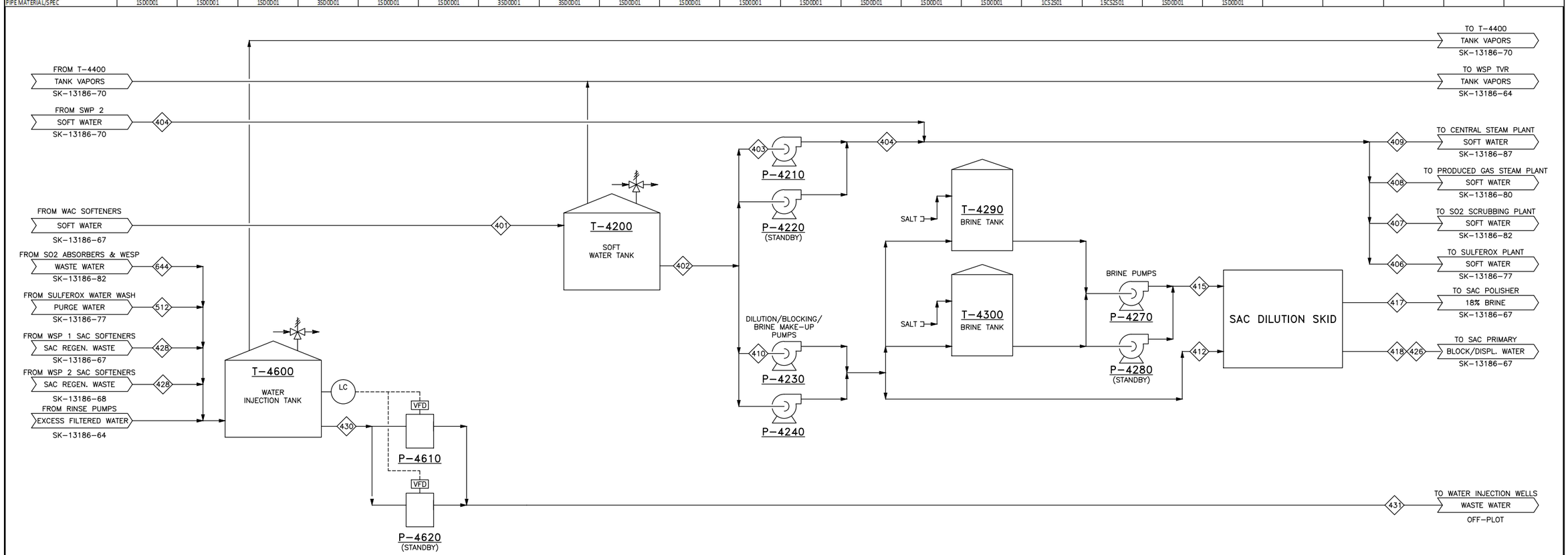

ITEM	TANKS			ITEM	PUMPS			
	T-4200	T-4290/4300	T-4600		P-4210/4220	P-4230/4240	P-4270/4280	P-4610/4620
SERVICE	SOFT WATER TANK	BRINE TANKS	WATER INJECTION TANK	SERVICE	STEAM PLANT FEED	BRINE MAKE-UP/ DILUTION	CONCENTRATED BRINE	WATER INJECTION
DIMENSIONS	55'-0"Ø x 24'-0" H	14'-0"ϕ x 35'-0" H	29'-9"Ø x 24'-0" H	DESIGN CAPACITY (GPM)	525	200	140	12,000 BPD
OPERATING/DESIGN PRESS (OSIG)	-1.0 / 6.0	ATMOSPHERIC	-1.0 / 6.0	DESIGN HEAD (PSI)	300	80	80	1,800
OPERATING/DESIGN TEMP (°F)	180 / 250	160 / 180	180 / 250	OPERATING/DESIGN TEMP (°F)	170 / 250	170 / 250	170 / 250	170 / 200
HOLDING CAPACITY (BBL)	10,000	170 TONS	3,000	NPSHA/VAPOR PRESSURE (PSIA)				
				HP	150	15	15	500
				SKID DIMENSIONS				
DESIGN & FABRICATION CODE	API 650	ASME/ANSI RTP-1	API 650	DESIGN & FABRICATION CODE	ANSI B73.1	ANSI B73.1	ANSI B73.1	API 674

DWG NUMBER	TITLE
SK-13186-51	TITLE/SHEET INDEX – PROCESS

REFERENCE DRAWINGS

ISSUED FOR REVIEW
NOT FOR CONSTRUCTION

TJCROSS ENGINEERS

T.J. CROSS AUTOCAD CONTROL
SCALE: NONE
PLOT AT: 1:1
ENGINEER: WES
DATE STARTED: 11/19/13
FILE: 13186/SK1318669
LAYER(S): AERA
CHANGED BY: OIC
LAST CHANGED: 07/18/14

DATE	REV	DESCRIPTION	BY	APPR	AERA ENG
07/18/14	E	ISSUED FOR REVIEW	OIC	SMH	EWP
06/24/14	D	REVISED PER AERA REVIEW	CJF	SMH	EWP
05/19/14	C	REVISED IFR	CJF	SMH	EWP
04/08/14	B	RE-ISSUED PER AERA COMMENTS	CJF	SMH	EWP
11/27/13	A	ISSUED FOR REVIEW	CJF	SMH	EWP

AERA

PROCESS FLOW DIAGRAM – WSP 1 SW STORAGE, BRINE, DISTRIBUTION AND DISPOSAL
FIELD REDEVELOPMENT PROJECT
SECTION 30 T9N R32W
EAST CAT CANYON FIELD – SANTA BARBARA COUNTY – CA

AERA ENGINEER: ERIC PAULSON
CO. ENGINEER: TJ CROSS ENGINEERS, INC.
PROJ. MGR: ALI GOKGOZ
DESIGNED BY: TJ CROSS ENGINEERS, INC.
DRAFTED BY: OLIVIA CASTRO
ECCN NO.

DATE: 11/19/13 SCALE: NONE
ORIGINAL DWG NO.
NO. SK-13186-69 REV. E
CAD FILE NO. SK1318669

:FUNCTIONAL LOCATION NO.

Stream Description / Process Parameter (OPERATING)	401 SOFT WATER FROM WAC SOFTENERS	402 SOFT WATER FROM SOFT WATER TANKS	403 SOFT WATER TO STEAM SYSTEM FEED PUMPS	404 SOFT WATER TO STEAM GENERATORS AND SOFT WATER SYSTEM	410 SOFT WATER BRINE SYSTEM PUMPS	412 SOFT WATER TO SAC DILUTION SKID	415 BRINE TO SAC DILUTION SKID	417 18% BRINE TO SAC POLISHING SOFTENER	418 BLOCKING WATER TO SAC PRIMARY SOFTENER	426 BRINE DISPLACEMENT WATER TO SAC SOFTENERS
BRINE (BPD)							329	504		
BRINE CONCENTRATION (WT %)							26%	18%	0%	0%
WATER (BPD)	18,315	18,315	17,216	17,216	329	770			113	482
NON-CONDEN. GAS (MMSCFD)										
WATER SG. (W/60 F REF.)	1.003	1.003	1.003	1.003	1.003	1.003			1.003	1.003
GAS MW										
PRESSURE (PSIG)	8	0	0	230	0	80	80	80	80	60
TEMPERATURE (°F)	170	170	170	170	170	170	170	170	170	170
LINE SIZE (IN)	12	12	10	6	6	4	3	4	2	4
PIPE MATERIAL/SPEC	1S00D01	1S00D01	1S00D01	3S00D01	1S00D01	1S00D01	1S00D01	1S00D01	1S00D01	1S00D01

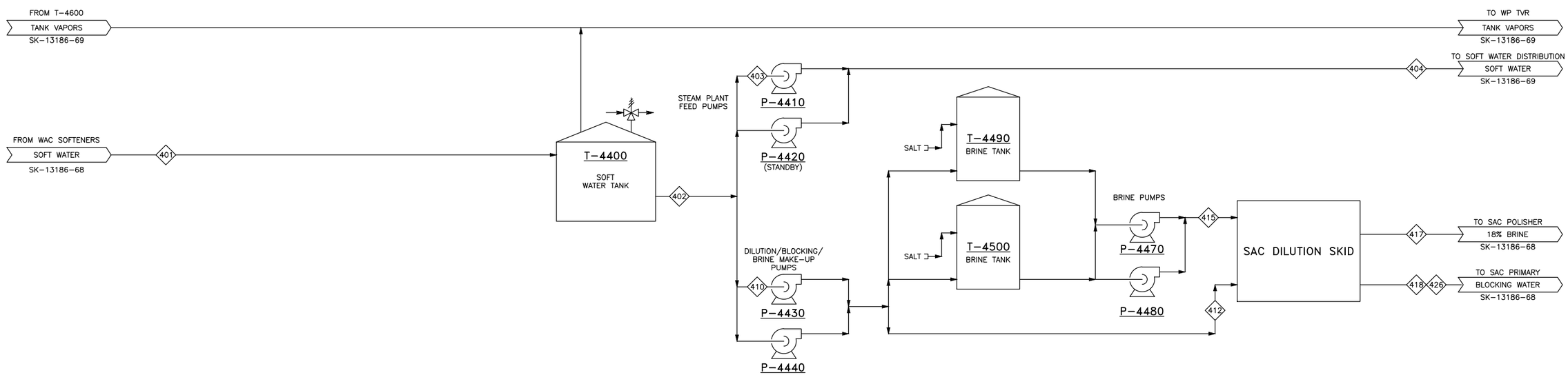

ITEM	TANKS		ITEM	PUMPS		
	T-4400	T-4490/4500		P-4410/4420	P-4430/4440	P-4470/4480
SERVICE	SOFT WATER TANK	BRINE TANKS	SERVICE	STEAM PLANT FEED	BRINE MAKE-UP/ DILUTION	CONCENTRATED BRINE
DIMENSIONS	55'-0"Ø x 24'-0" H	14'-0"ϕ x 35'-0" H	DESIGN CAPACITY (GPM)	525	200	140
OPERATING/DESIGN PRESS (OSIG)	-1.0 / 6.0	ATMOSPHERIC	DESIGN HEAD (PSI)	300	80	80
OPERATING/DESIGN TEMP (°F)	180 / 210	160 / 180	OPERATING/DESIGN TEMP (°F)	170 / 250	170 / 250	170 / 250
HOLDING CAPACITY (BBL)	10,000	170 TONS	NPSHA/VAPOR PRESSURE (PSIA)			
			HP	150	15	15
			SKID DIMENSIONS			
DESIGN & FABRICATION CODE	API 650	ASME/ANSI RTP-1	DESIGN & FABRICATION CODE	ANSI B73.1	ANSI B73.1	ANSI B73.1

DWG NUMBER	TITLE
SK-13186-51	TITLE/SHEET INDEX – PROCESS

REFERENCE DRAWINGS

ISSUED FOR REVIEW
NOT FOR CONSTRUCTION

TJCROSS ENGINEERS

T.J. CROSS AUTOCAD CONTROL
SCALE: NONE
PLOT AT: 1:1
ENGINEER: WES
DATE STARTED: 11/19/13
FILE: 13186/SK1318670
LAYER(S): AERA
CHANGED BY: OIC
LAST CHANGED: 07/18/14

DATE	REV	DESCRIPTION	BY	APPR	AERA ENG
07/18/14	E	ISSUED FOR REVIEW	OIC	SMH	EWP
06/24/14	D	REVISED PER AERA REVIEW	CJF	SMH	EWP
05/19/14	C	REVISED IFR	CJF	SMH	EWP
04/08/14	B	RE-ISSUED PER AERA COMMENTS	CJF	SMH	EWP
11/27/13	A	ISSUED FOR REVIEW	CJF	SMH	EWP

AERA

PROCESS FLOW DIAGRAM – WSP 2 SW STORAGE, BRINE AND DISTRIBUTION
FIELD REDEVELOPMENT PROJECT
SECTION 30 T9N R32W
EAST CAT CANYON FIELD – SANTA BARBARA COUNTY – CA

AERA ENGINEER: ERIC PAULSON
CO. ENGINEER: TJ CROSS ENGINEERS, INC.
PROJ. MGR: ALI GOKGOZ
DESIGNED BY: TJ CROSS ENGINEERS, INC.
DRAFTED BY: OLIVIA CASTRO
ECCN NO.

DATE: 11/19/13 SCALE: NONE
ORIGINAL DWG NO.
NO. SK-13186-70 REV. E
CAD FILE NO. SK1318670

:FUNCTIONAL LOCATION NO.

Stream Description / Process Parameter (OPERATING)	21 PRODUCED GAS FROM OCP 1	61 PRODUCED GAS FROM OCP 2	500 PRODUCED GAS	501 VAPOR REVOVERY GAS TO COOLED GAS SCRUBBER	502 COOLED PRODUCED GAS TO SULFATREAT VESSELS OR TO SULFEROX PLANT	505 CONDENSATE FROM WARM GAS SCRUBBER	506 CONDENSATE	970 TVR GAS FROM OCP/WCP TVR COMPRESSORS	105 GROUP STATION 1 PRODUCED GAS AND STEAM TO OCP 1	106 GROUP STATION 2 PRODUCED GAS AND STEAM TO OCP 2
OIL (BPD)	6	6	12			10	10		6	6
WATER\ STEAM (BPD)	560	560	1,120	9	9	1,066	1,066	3	572	572
CONDENSIBLE H.C. (BPD)										
NON-CONDEN. GAS (MMSCFD)	0.0000	0.0000	0.0000	1.8460	1.8460			0.8460	0.5000	0.5000
WATER SG. (W/60 F REF.)	1.003	1.003	1.003			1.003	1.003			
GAS MW	30.3	30.3	30.3	18.4	18.4			18.4	30	30
PRESSURE (PSIG)	30	30	30	30	30	22	22	30	35	35
TEMPERATURE (°F)	180	180	180	120	120	180	180	120	260	260
LINE SIZE (IN)	10	10	14	10	10	2	3	8	10	10
PIPE MATERIAL/SPEC	1CS2S01	1CS2S01	1CS2S01	1CS2S01	1CS2S01	1CS2S01	1CS2S01	1CS2S01	3CS2S01	3CS2S02

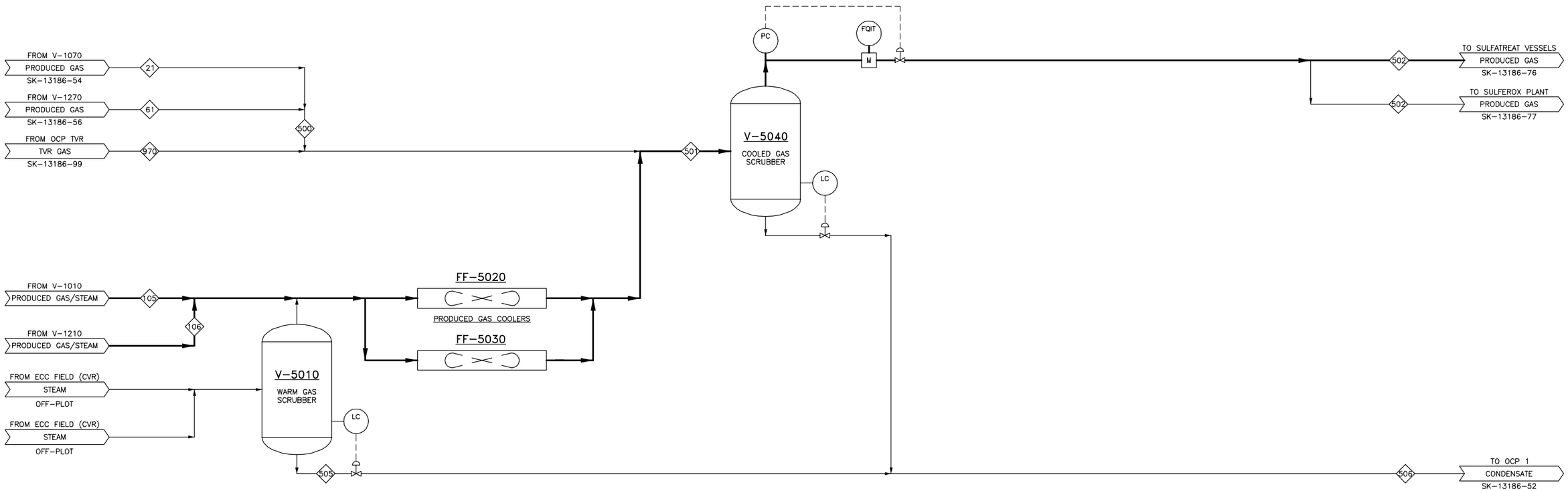

ITEM	VESSELS		ITEM	FIN FAN EXCHANGER
	V-5010	V-5040		FF-5020/5030
SERVICE	WARM GAS SCRUBBER	COOLED GAS SCRUBBER	SERVICE	PRODUCED GAS COOLER
DIMENSIONS	36"Ø x 15'-0" S/S	30"Ø x 10'-0" S/S	DUTY (MBTU/HR)	400
OP./DESIGN PRESSURE (PSIG)	35 / 150	30 / 150	PROCESS DP (PSI)	2
OP./DES. TEMPERATURE (°F)	260 / 350	120 / 350	AIRFLOW (SCFM)/TEMPIN/TEMPOUT (°F)	
DES. FLOW - GAS (MMSCFD)	1.5	2.5	PROCESS TEMP IN/OUT/ DESIGN (°F)	180 / 120 / 350
DES. FLOW - LIQUID (BPD)	1,100	50	OPERATE/DESIGN PRESSURE (PSIG)	13 / 150
HOLDING CAPACITY (BBL)			FAN HP / # OF FANS/RPM	7.5 / 1
REMARKS:			DIMENSIONS	
DESIGN & FABRICATION CODE	ASME SEC. VIII	ASME SEC. VIII	DESIGN & FABRICATION CODE	API 661

DWG NUMBER	TITLE
SK-13186-51	TITLE SHEET/DRAWING INDEX – PROCESS

REFERENCE DRAWINGS

ISSUED FOR REVIEW
NOT FOR CONSTRUCTION

TJCROSS ENGINEERS

T.J. CROSS AUTOCAD CONTROL
SCALE: NONE
FILE: 13186/SK1318675
PLOT AT: 1:1
LAYER(S): AERA
ENGINEER: WES
CHANGED BY: AMW
DATE STARTED: 09/30/13
LAST CHANGED: 01/20/16

DATE	REV	DESCRIPTION	BY	APPR	AERA ENG
01/20/16	E2	REVISED IFR	CJF	SMH	EWP
07/18/14	E	ISSUED FOR REVIEW	OIC	SMH	EWP
06/24/14	D	REVISED PER AERA REVIEW	CJF	SMH	EWP
05/19/14	C	REVISED IFR	CJF	SMH	EWP
04/08/14	B	RE-ISSUED PER AERA COMMENTS	CJF	SMH	EWP
11/18/13	A	ISSUED FOR REVIEW	CJF	SMH	EWP

AERA

PROCESS FLOW DIAGRAM – PGTP – PRODUCED GAS COOLING & SCRUBBING
FIELD REDEVELOPMENT PROJECT
SECTION 30 T9N R32W
EAST CAT CANYON FIELD – SANTA BARBARA COUNTY – CA

AERA ENGINEER: ERIC PAULSON
DATE: 10/01/13
SCALE: NONE
CO. ENGINEER: TJ CROSS ENGINEERS, INC.
ORIGINAL DWG NO.
PROJ. MGR: ALI GOKGOZ
DESIGNED BY: TJ CROSS ENGINEERS, INC
DRAFTED BY: OLIVIA CASTRO
ECCN NO.
NO. SK-13186-75
REV. E2
CAD FILE NO. SK1318675

:FUNCTIONAL LOCATION NO.

Stream Description / Process Parameter (OPERATING)	502 COOLED PRODUCED GAS TO PRIMARY SULFATREAT VESSEL	518 SWEET GAS FROM SULFEROX PLANT	541 SWEET GAS FROM SULFATREAT VESSELS TO SWEET GAS SCRUBBER	542 RELIEF GAS FROM KO VESSEL TO FLARE	546 PGTP CONDENSATE TO SCP	550 SWEET PRODUCED GAS TO PRODUCED GAS STEAM GENERATOR	551 SWEET PRODUCED GAS TO SGS
OIL (BPD)					10		
WATER\ STEAM (BPD)	9	9	9	9	1,066	9	
CONDENSIBLE H.C. (BPD)							
NON-CONDEN. GAS (MMSCFD)	1.8460	1.9786	1.9786	1.9786		1.9786	1.9786
WATER SG. (W/60 F REF.)					1.003		
GAS MW	18.4	24.1	24.1	24.1		24.1	100.0
PRESSURE (PSIG)	30	25	25	25	13	25	
TEMPERATURE (°F)	120	120	120	120	180	120	120
LINE SIZE (IN)	10	8	8	8	3	8	4
PIPE MATERIAL/SPEC	1CS2S01	1CS2S01	1CS2S01	1CS2S01	1CS2S01	1CS2S01	

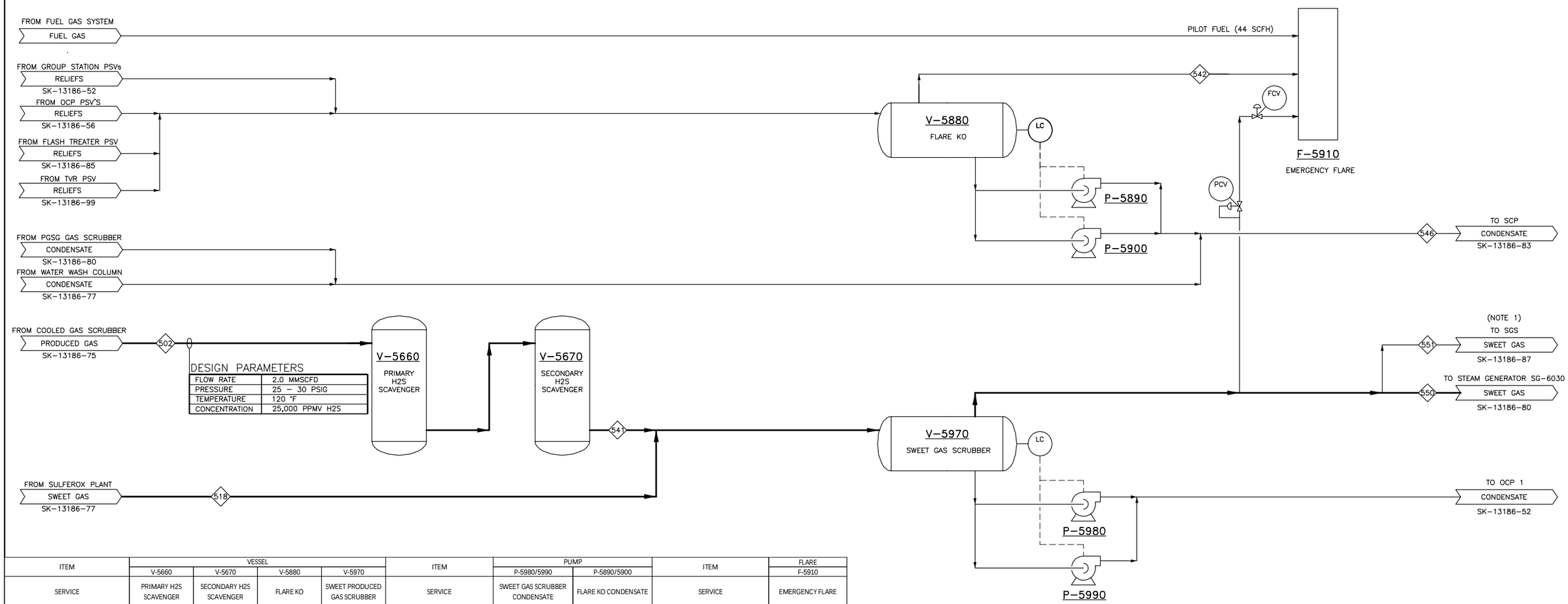

ITEM	VESSEL				ITEM	PUMP		ITEM	FLARE
	V-5660	V-5670	V-5880	V-5970		P-5980/5990	P-5890/5900		F-5910
SERVICE	PRIMARY H2S SCAVENGER	SECONDARY H2S SCAVENGER	FLARE KO	SWEET PRODUCED GAS SCRUBBER	SERVICE	SWEET GAS SCRUBBER CONDENSATE	FLARE KO CONDENSATE	SERVICE	EMERGENCY FLARE
DIMENSIONS	12'-0"Ø x 30'-0"	12'-0"Ø x 30'-0"	5'-0"Ø x 15'-0"	3'-0"Ø x 9'-0"	DESIGN CAPACITY (GPM)	15	50	DUTY (MMBTU/HR)	40.0
OPERATE/DESIGN PRESSURE (PSIG)	25 / 150	25 / 150	25 / 150	25 / 150	DESIGN HEAD (PSI)	40	40	DESIGN FLOW - GAS (MMSCFD)	
OPERATE/DESIGN TEMPERATURE (°F)	120 / 250	120 / 250	260 / 350	260 / 350	OPERATING/DESIGN TEMP (°F)	120 / 250	200 / 250	PROCESS TEMP (°F)	1,500
DESIGN FLOW - GAS (MMSCFD)	2.0	2.0	2.0	2.0	NPSHA/VAPOR PRESSURE (PSIA)				
DESIGN FLOW - LIQUID (BPD)					HP	1.5	3		
HOLDING CAPACITY (GAL)					SKID DIMENSIONS			IGNITION	PILOT
REMARKS:					REMARKS:			REMARKS:	25 HP BLOWER
DESIGN & FABRICATION CODE	ASME SEC. VIII	ASME SEC. VIII	ASME SEC. VIII	ASME SEC. VIII	DESIGN & FABRICATION CODE	ANSI B73.1	ANSI B73.1	DIMENSIONS	7'-0"ϕ X 40'

SK-13186-51	TITLE SHEET/DRAWING INDEX - PROCESS
DWG NUMBER	TITLE

REFERENCE DRAWINGS

NOTES:

1. NORMALLY ZERO FLOW.

ISSUED FOR REVIEW
NOT FOR CONSTRUCTION

TJCROSS ENGINEERS

T.J. CROSS AUTOCAD CONTROL
SCALE: NONE
PLOT AT: 1:1
ENGINEER: WES
DATE STARTED: 10/24/13
FILE: 13186/SK1318676
LAYER(S): AERA
CHANGED BY: AMW
LAST CHANGED: 02/01/16

DATE	REV	DESCRIPTION	BY	APPR	AERA ENG
01/20/16	E2	REVISED IFR	CJF	SMH	EWP
11/02/15	E1	ISSUED FOR REVIEW	CJF	SMH	EWP
07/18/14	E	ISSUED FOR REVIEW	OIC	SMH	EWP
06/24/14	D	REVISED PER AERA REVIEW	CJF	SMH	EWP
05/19/14	C	REVISED IFR	CJF	SMH	EWP
04/08/14	B	RE-ISSUED PER AERA COMMENTS	CJF	SMH	EWP
11/18/13	A	ISSUED FOR REVIEW	CJF	SMH	EWP

AERA

PROCESS FLOW DIAGRAM - PGTP - SULFATREAT/FLARE
FIELD REDEVELOPMENT PROJECT
SECTION 30 T9N R32W
EAST CAT CANYON FIELD - SANTA BARBARA COUNTY - CA

AERA ENGINEER: ERIC PAULSON
CO. ENGINEER: TJ CROSS ENGINEERS, INC.
PROJ. MGR: ALI GOKGOZ
DESIGNED BY: TJ CROSS ENGINEERS, INC.
DRAFTED BY: OLIVIA CASTRO
ECCN NO.

DATE: 10/24/13 SCALE: NONE
ORIGINAL DWG NO.
NO. SK-13186-76 REV. E2
CAD FILE NO. SK1318676

:FUNCTIONAL LOCATION NO.

Process Parameter (OPERATING) \ Stream Description	406 SOFT WATER FROM SOFT WATER DISTRIBUTION	502 PRODUCED GAS FROM COOLED GAS SCRUBBER	508 WASH WATER TO WASH WATER CIRCULATION PUMPS	509 WASH WATER TO WASH WATER HEATER	510 HEATED WASH WATER TO WASH WATER COLUMN	511 WASHED PRODUCED GAS TO WASH WATER FILTER SEPARATOR	512 PURGE WATER TO WASTE WATER INJECTION TANK	513 WET STEAM TO WASH WATER HEATER	514 STEAM CONDENSATE TO SCP	515 FILTERED PRODUCED GAS TO SPARGE TOWER	516 MAKE-UP WATER TO WASH WATER COLUMN	517 TREATED PRODUCED GAS TO SULFEROX TREATED GAS SCRUBBER	518 TREATED GAS TO TREATED GAS SCRUBBER	521 SFX SOLUTION TO REGENERATOR	522 REGEN. AIR TO REGENERATOR	523 SFX SOLUTION TO SURGE TANK	533 HEATED SFX SOLUTION TO SPARGE TOWER	◇	◇	◇	◇	◇	◇	◇
STEAM QUALITY (%)								53%	0%															
WATER\ STEAM (BPD)	61	9	3,451	3,417	3,417	9	34	109	109	9	61	9	9											
SFX SOLUTION (GPM)														325		325	85							
NON-CONDEN. GAS (MMSCFD)		2.0289				2.0289				2.0289		1.9786	1.9786		0.3710									
WATER SG. (W/60 F REF.)	1.003		1.003	1.003	1.003		1.003	1.003	1.003		1.003													
GAS MW		24.3				24.3				24.3		24.1	24.1		29.0									
PRESSURE (PSIG)	70	30	30	35	30	29	80	50	50	28	70	28	25	15	15	2	29							
TEMPERATURE (°F)	80	120	106	106	121	120	106	298	298	120	80	120	120	120	120	120	120							
LINE SIZE (IN)	2	10	4	2	2	10	2	3	2	8	2	8	8	4	4	8	3							
PIPE MATERIAL/SPEC	1S00D01	1S00D01	1S00D01	1S00D01	1S00D01	1S00D01	1S00D01	1CS2S01	1CS2S01	1S00D01	1S00D01	1S00D01	1CS2S01	1S00D01	1S00D01	1S00D01	1S00D01							

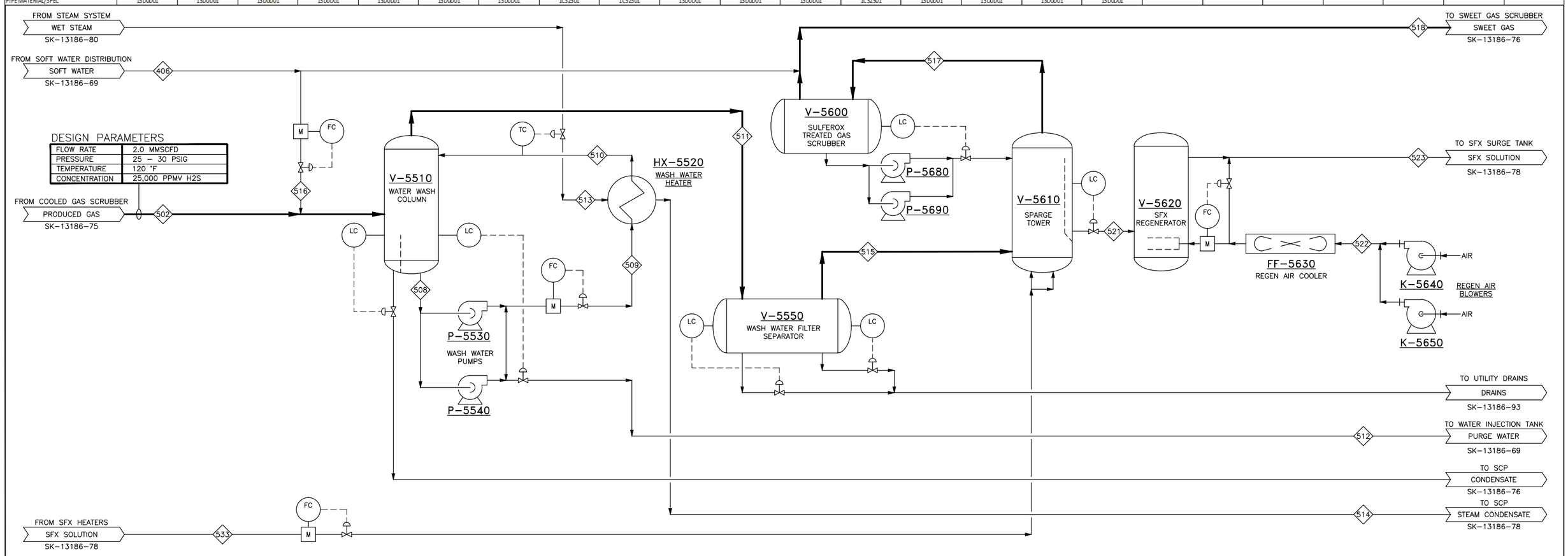

ITEM	VESSELS					ITEM	HEAT EXCHANGER	ITEM	FIN FAN	ITEM	PUMP		ITEM	BLOWER
	V-5510	V-5550	V-5600	V-5610	V-5620		HX-5520		FF-5630		P-5530/5540	P-5680/5690		K-5640/5650
SERVICE	PRODUCED GAS WATER WASH	WATER WASH FILTERATION/ SEPARATION	TREATED GAS SCRUBBING	SFX GAS SPARGING	SFX SOLUTION REGENERATION	SERVICE	WATER WASH HEATING	SERVICE	REGEN AIR COOLING	SERVICE	WASH WATER CIRC./PURGE	TREATED GAS SCRUBBER CONDENSATE	SERVICE	SULFEROX REGEN AIR
DIMENSIONS	3'-6" ID x 30'-0" S/S	2'-6" ID x 9'-0" S/S	3'6"ID x 10'-0" S/S	7'-6" ID x 40'-0" S/S	6'-0" ID x 20'-0" s/s	DUTY (MMBTU/HR)	0.820	DUTY (MBTU/HR)	80	DESIGN CAPACITY (GPM)	110	50	FLOW / PRESSURE	300 SCFM/ 15 PSIG
OPERATING/DESIGN PRESS (PSIG)	40 / 100	30 / 100	30 / 100	30 / 100	15 / 30	PROCESS DP (PSI)	5	PROCESS DP (PSI)/FLOW (LBS/HR)		DESIGN HEAD (FT)	103	30	HP / RPM	50 / 3600
OPERATING/DESIGN TEMP (°F)	120 / 250	120 / 300	120 / 250	120 / 250	120 / 375	SHELL SIDE TEMP IN/OUT (°F)	298 / 298	AIRFLOW (SCFM)/TEMP IN/TEMP OUT (°F)	XXX	OPERATING/DESIGN TEMP (°F)	120 / 250	120 / 250		
DESIGN FLOW-GAS (MMSCFD)		.				TUBE SIDE TEMP IN/OUT (°F)	106 / 121	PROCESS TEMP IN/OUT/ DESIGN (°F)	XXX / 400	NPSHA/VAPOR PRESSURE (PSIA)				
DESIGN FLOW-LIQUID (BPD)		XXX / XXX				DESIGN PRESSURE (PSIG)	150	OPERATE/DESIGN PRESSURE (PSIG)	XX / 30	HP	7.5	2		
HOLDING CAPACITY (GAL)		330				DESIGN TEMPERATURE (°F)	350	FAN HP / # OF FANS/RPM	5 HP; 1 bay; VFD	SKID DIMENSIONS	26"x62"	18"x54"		
REMARKS:	304L SS, 2" INSUL.	304L SS; 2" INSUL.	304L SS	304L SS, 1" INSUL.	304L SS, 1" INSUL.	REMARKS:	AET Horizontal, 304L SS	DIMENSIONS	XXX		316 SS	316 SS		
DESIGN & FABRICATION CODE	ASME SEC. VIII	ASME SEC. VIII	ASME SEC. VIII	ASME SEC. VIII	ASME SEC. VIII	DESIGN & FABRICATION CODE	TEMA	DESIGN & FABRICATION CODE		DESIGN & FABRICATION CODE	ANSI B73.1	ANSI B73.1		

DWG NUMBER	TITLE
SK-13186-51	TITLE SHEET/DRAWING INDEX - PROCESS

REFERENCE DRAWINGS

ISSUED FOR REVIEW
NOT FOR CONSTRUCTION

TJCROSS ENGINEERS

T.J. CROSS AUTOCAD CONTROL
SCALE: NONE
PLOT AT: 1:1
ENGINEER: WES
DATE STARTED: 10/22/2013
FILE: 13186/SK1318677
LAYER(S): AERA
CHANGED BY: OIC
LAST CHANGED: 07/18/14

DATE	REV	DESCRIPTION	BY	APPR	AERA ENG
07/18/14	E	ISSUED FOR REVIEW	OIC	SMH	EWP
06/24/14	D	REVISED PER AERA REVIEW	CJF	SMH	EWP
05/19/14	C	REVISED IFR	CJF	SMH	EWP
04/08/14	B	RE-ISSUED PER AERA COMMENTS	CJF	SMH	EWP
11/18/13	A	ISSUED FOR REVIEW	CJF	SMH	EWP

AERA

PROCESS FLOW DIAGRAM - PGTP - SULFEROX PLANT AREA 1
FIELD REDEVELOPMENT PROJECT
SECTION 30 T9N R32W
EAST CAT CANYON FIELD - SANTA BARBARA COUNTY - CA

AERA ENGINEER: ERIC PAULSON
DATE: 10/22/13
SCALE: NONE
CO. ENGINEER: TJ CROSS ENGINEERS, INC.
ORIGINAL DWG NO.
PROJ. MGR: ALI GOKGOZ
DESIGNED BY: TJ CROSS ENGINEERS, INC.
DRAFTED BY: OLIVIA CASTRO
ECCN NO.
CAD FILE NO. SK1318677
NO. SK-13186-77
REV. E

Stream Description / Process Parameter (OPERATING)	514 STEAM CONDENSATE FROM WASH WATER HEATER	523 REGENERATED SFX SOLUTION FROM REGENERATOR	524 SPENT AIR TO VENT STACK/FLARE	525 SFX SULFUR SLURRY TO SLURRY CIRCULATION PUMPS	526 SFX SULFUR SLURRY FROM SLURRY CIRCULATION PUMPS	527 SFX SULFUR SLURRY TO SULFUR FILTERS	528 SFX SULFUR SLURRY RECYCLE TO SURGE TANK	529 SFX FILTRATE TO FILTRATE TANK	530 SFX FILTRATE TO FILTRATE PUMPS	531 SFX SOLUTION TO SFX CIRCULATION PUMPS	532 SFX SOLUTION TO SFX HEATERS	533 HEATED SFX SOLUTION TO SPARGE TOWER	535 HEAT MEDIUM FROM CIRCULATION PUMPS TO HEAT MEDIUM HEATER	536 HEAT MEDIUM FROM HEAT MEDIUM HEATER	537 HEAT MEDIUM TO RETURN TO SURGE DRUM	538 SULFUR CAKE TO TRUCK BINS	561 WET STEAM TO HEAT MEDIUM HEATER	562 STEAM CONDENSATE FROM HEAT MEDIUM HEATER	563 STEAM CONDENSATE FROM SULFEROX HEATING SYSTEMS TO SCP					
STEAM QUALITY (%)	0%																53%	0%	0%					
WATER\ STEAM (BPD)	109												153 GPM	153 GPM	153 GPM		159	159	268					
SFX SOLUTION (GPM)		325		85	325	85	240	85	105	85	325	325												
NON-CONDEN. GAS (MMSCFD)			0.374																					
SULFUR (TONS/DAY)																2.1								
GAS MW			28.1																					
PRESSURE (PSIG)	50	2	2	2	100	100	2	0	0	15	82	80	150	165	150		50	50	50					
TEMPERATURE (°F)	298	120	120	120	120	120	120	120	120	120	120	125	30	28	25		298	298	298					
LINE SIZE (IN)	2	8	6	6	6	3	4	3	3	3	4	4	3	3	3		3	3	3					
PIPE MATERIAL/SPEC	1CS2S01	1SD0D01	1SD0D01	1SD0D01	1SD0D01	1SD0D01	1SD0D01	1SD0D01	1SD0D01	1SD0D01	1SD0D01	1SD0D01	1CS2S01	1CS2S01	1CS2S01		1CS2S01	1CS2S01	1CS2S01					

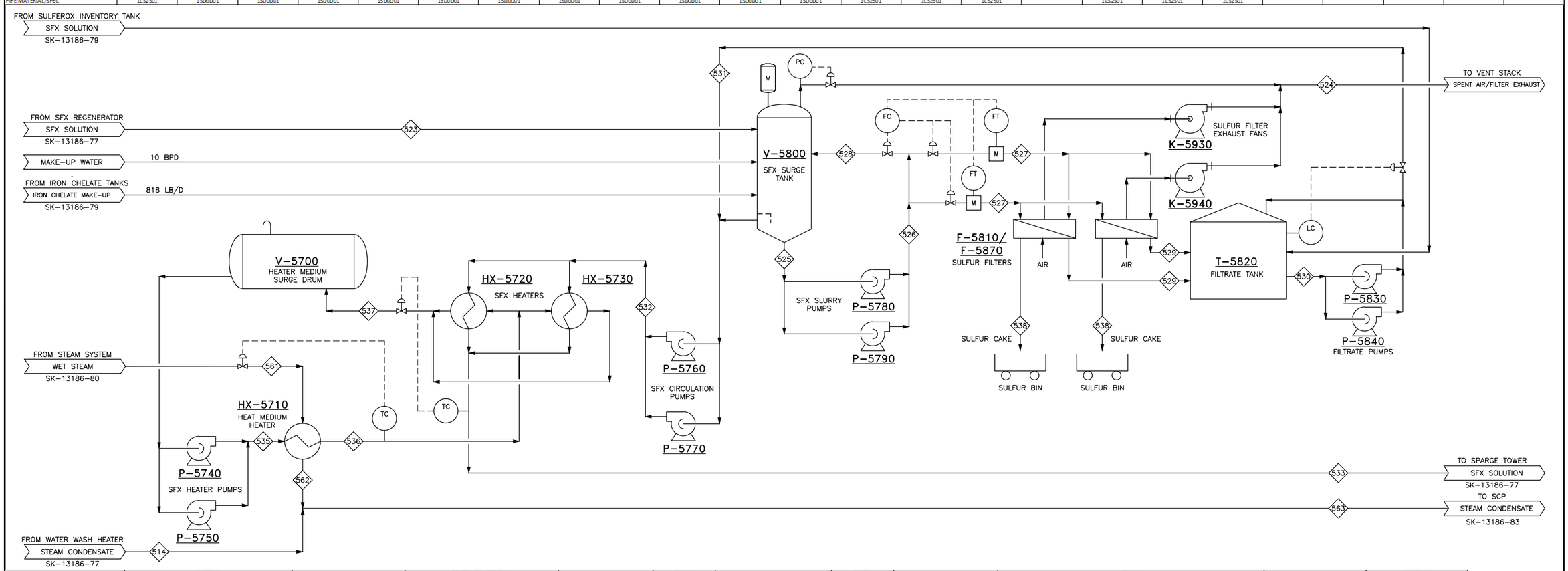

ITEM	VESSELS V-5700	VESSELS V-5800	ITEM	HEAT EXCHANGERS HX-5710	HEAT EXCHANGERS HX-5720/5730	ITEM	FILTER F-5810/5870	ITEM	TANK T-5820	ITEM	PUMPS P-5740/5750	PUMPS P-5760/5770	PUMPS P-5780/5790	PUMPS P-5830/5840	ITEM	BLOWER K-5930/5940
SERVICE	HEAT TRANSFER FLUID SURGE	SFX SURGE	SERVICE	HEAT TRANSFER FLUID HEATER	SFX SOLUTION HEATER	SERVICE	SULFUR FILTERTRATION	SERVICE	FILTRATE STORAGE	SERVICE	SFX HEATER	SFX CIRCULATION	SFX SLURRY	FILTRATE CIRCULATION	SERVICE	SULFUR FILTER EXHAUST
DIMENSIONS	3'-0" Ø x 8'-0" S/S	7-6"Ø x 28'-0" S/S	DUTY (MMBTU/HR)	1.13	1.13	DIMENSIONS		DIMENSIONS	8'-0" Ø x 6'-0" H	DESIGN CAPACITY (GPM)	170	360	95	115	FLOW (ACFM)/ PRESSURE (PSI)	
OPERATE/DESIGN PRESSURE (PSIG)	0 / 50	10,990.000	PROCESS DP (PSI)	5	5	MAWP @ TEMP		OPERATE/DESIGN PRESSURE (OSIG)		DESIGN HEAD (FT)	86	125	96	161	HP @ RPM	
OPERATE/DESIGN TEMPERATURE (°F)	150 / 250	120/ 250	SHELL SIDE TEMP IN/OUT (°F)	298 / 298	150 / 165	TYPE		OPERATE/DESIGN TEMPERATURE (F)		OPERATING/DESIGN TEMP (°F)	120/ 250	120/ 250	120/ 250	120/ 250		
DESIGN FLOW - LIQUID (BPD)			TUBE SIDE TEMP IN/OUT (°F)	150 / 165	120 / 125			HOLDING CAPACITY (GAL)	2,300	NPSHA/VAPOR PRESSURE (PSIA)						
HOLDING CAPACITY (GAL)	425	9,250	DESIGN PRESSURE (PSIG)	150	150					HP	10	50	10	10		
HP		3/4 (RAKE MOTOR)	DESIGN TEMPERATURE (°F)	350	350					SKID DIMENSIONS	26" x 62"	22" x 68"	26" x 62"	26" x 62"		
REMARKS:	304L SS, 1.5" INSUL	304L SS, 2" INSUL	REMARKS:	BEU	VERTICAL BEM, 316 SS	REMARKS:		REMARKS	POLYETHYLENE	REMARKS:	316 SS	316 SS	316 SS	316 SS		
DESIGN & FABRICATION CODE	ASME SEC. VIII	ASME SEC. VIII	DESIGN & FABRICATION CODE	TEMA	TEMA	DESIGN & FABRICATION CODE		DESIGN & FABRICATION CODE		DESIGN & FABRICATION CODE	ANSI B73.1	ANSI B73.1	ANSI B73.1	ANSI B73.1	DESIGN & FABRICATION CODE	

DWG NUMBER	TITLE
SK-13186-51	TITLE SHEET/DRAWING INDEX – PROCESS

REFERENCE DRAWINGS

ISSUED FOR REVIEW
NOT FOR CONSTRUCTION

TJCROSS ENGINEERS

T.J. CROSS AUTOCAD CONTROL
SCALE: NONE
PLOT AT: 1:1
ENGINEER: WES
DATE STARTED: 10/28/13
FILE: 13186/SK1318678
LAYER(S): AERA
CHANGED BY: OIC
LAST CHANGED: 07/18/14

DATE	REV	DESCRIPTION	BY	APPR	AERA ENG
07/18/14	E	ISSUED FOR REVIEW	OIC	SMH	EWP
06/24/14	D	REVISED PER AERA REVIEW	CJF	SMH	EWP
05/19/14	C	REVISED IFR	CJF	SMH	EWP
04/08/14	B	RE-ISSUED PER AERA COMMENTS	CJF	SMH	EWP
11/18/13	A	ISSUED FOR REVIEW	CJF	SMH	EWP

AERA

PROCESS FLOW DIAGRAM – PGTP – SULFEROX PLANT AREA 2
FIELD REDEVELOPMENT PROJECT
SECTION 30 T9N R32W
EAST CAT CANYON FIELD – SANTA BARBARA COUNTY – CA

AERA ENGINEER: ERIC PAULSON
CO. ENGINEER: TJ CROSS ENGINEERS, INC.
PROJ. MGR: ALI GOKGOZ
DESIGNED BY: TJ CROSS ENGINEERS, INC.
DRAFTED BY: OLIVIA CASTRO
ECCN NO.

DATE: 10/28/13 SCALE: NONE
ORIGINAL DWG NO.
NO. SK-13186-78 REV. E
CAD FILE NO. SK1318678

:FUNCTIONAL LOCATION NO.

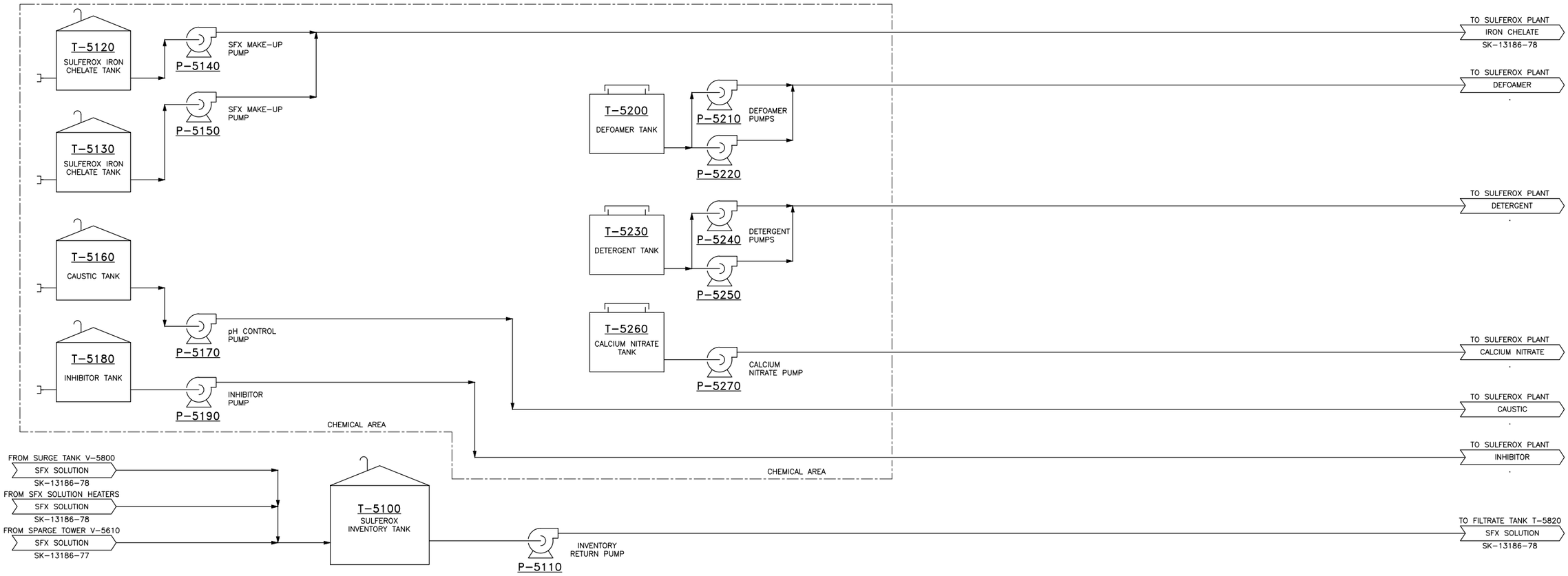

ITEM	TANK						
	T-5100	T-5120/5130	T-5160	T-5180	T-5200	T-5230	T-5260
SERVICE	SULFEROX INVENTORY STORAGE	SULFEROX IRON CHELATE MAKE-UP	CAUSTIC TANK	INHIBITOR TANK	DEFOAMER TANK	DETERGENT TANK	CALCIUM NITRATE TANK
DIMENSIONS	12'-0"Ø x 14'-4 S/S	12'-0"Ø x 11'-11 S/S	7'-5"Ø x 7'-5 S/S	7'-5"Ø x 7'-5 S/S	3'-6" x 3'-6" x 3'-6"	3'-6" x 3'-6" x 3'-6"	3'-6" x 3'-6" x 3'-6"
OPERATE/DESIGN PRESSURE (OSIG)							
OPERATE/DESIGN TEMPERATURE (F)							
HOLDING CAPACITY (GAL)	10,300	8,000	2,000	2,000	255	255	255
REMARKS	POLY TANK	POLY TANK	POLY TANK	POLY TANK	S/S TOTE	S/S TOTE	S/S TOTE

ITEM	PUMPS						
	P-5110	P-5140/5150	P-5170	P-5190	P-5210/5220	P-5240/5250	P-5270
SERVICE	INVENTORY RETURN	IRON CHELATE METERING	CAUSTIC pH METERING	INHIBITOR METERING	DE-FOAMER METERING	DETERGENT METERING	CALCIUM NITRATE METERING
DESIGN CAPACITY	200 GPM	2.5 GPH	2.0 GPH	1.0 GPH	0.08 GPH	0.04 GPH	0.04 GPH
DESIGN HEAD	87 FT						
OPERATING/DESIGN TEMP (°F)	120/ 250	120/ 250	120/ 250	120/ 250	120/ 250	120/ 250	120/ 250
NPSHA/VAPOR PRESSURE (PSIA)							
HP	10	1/4	1/4	1/4	1/4	1/4	1/4
SKID DIMENSIONS							

SK-13186-51	TITLE SHEET/DRAWING INDEX – PROCESS
DWG NUMBER	TITLE

REFERENCE DRAWINGS

ISSUED FOR REVIEW
NOT FOR CONSTRUCTION

TJCROSS ENGINEERS

T.J. CROSS AUTOCAD CONTROL
SCALE: NONE
FILE: 13186/SK1318679
PLOT AT: 1:1
LAYER(S): AERA
ENGINEER: WES
CHANGED BY: OIC
DATE STARTED: 11/19/13
LAST CHANGED: 07/18/14

DATE	REV	DESCRIPTION	BY	APPR	AERA ENG
07/18/14	E	ISSUED FOR REVIEW	OIC	SMH	EWP
06/24/14	D	REVISED PER AERA REVIEW	CJF	SMH	EWP
05/19/14	C	REVISED IFR	CJF	SMH	EWP
04/08/14	B	RE-ISSUED PER AERA COMMENTS	CJF	SMH	EWP
11/27/13	A	ISSUED FOR REVIEW	CJF	SMH	EWP

AERA

PFD – PGTP SULFEROX CHEMICAL STORAGE
FIELD REDEVELOPMENT PROJECT
SECTION 30 T9N R32W
EAST CAT CANYON FIELD – SANTA BARBARA COUNTY – CA

AERA ENGINEER:	ERIC PAULSON	DATE: 11/19/13	SCALE: NONE
CO. ENGINEER:	TJ CROSS ENGINEERS, INC.	ORIGINAL DWG NO.	
PROJ. MGR:	ALI GOKGOZ	NO. SK-13186-79	REV. E
DESIGNED BY:	TJ CROSS ENGINEERS, INC.		
DRAFTED BY:	OLIVIA CASTRO		
ECCN NO.		CAD FILE NO. SK1318679	

:FUNCTIONAL LOCATION NO.

Stream Description / Process Parameter (OPERATING)	9 WET STEAM TO OCP 1 LCO HEATER	24 WET STEAM TO OCP 1	49 WET STEAM TO OCP 2 LCO HEATER	56 WET STEAM TO OCP 2	408 SOFT WATER TO PRODUCED GAS STEAM GENERATOR FEED PUMP	513 WET STEAM TO SULFEROX WASH WATER HEATER	550 TREATED PRODUCED GAS TO PRODUCED GAS STEAM GENERATOR FUEL SYSTEM	561 WET STEAM TO SULFEROX HEAT MEDIUM SYSTEM	602 FUEL GAS TO PRODUCED GAS STEAM GENERATOR	615 SOFT WATER TO PRODUCED GAS STEAM GENERATOR	616 WET STEAM TO UTILITY STEAM SEPARATOR	617 DRY STEAM TO CENTRAL STEAM PLANT	618 STEAM CONDENSATE TO UTILITY STEAM SYSTEM	620 SOUR FLUE GAS TO SO2 SCRUBBERS	660 WET STEAM TO FLASH TREATER HEATER (HOLD)	662 WET STEAM TO STOCK OIL HEATER
STEAM QUALITY (%)	44%	44%	44%	44%	0%	44%		44%		0%	70%	100%	0%		44%	44%
WATER\ STEAM (BPD)	132	NNF	132	NNF	3,000	109	9	159		3,000	3,000	2,100	900		148	220
CONDENSIBLE H.C. (BPD)																
NON-CONDEN. GAS (MMSCFD)							1.9786							18.2		
WATER SG. (W/60 F REF.)	1.003	1.003	1.003	1.003	1.003	1.003		1.003		1.003	1.003		1.003		1.003	1.003
GAS MW							24.1		18.4					28.5		
PRESSURE (PSIG)	250	250	250	250	230	250	25	250	100	2,450	2,200	2,200	2,200	0	250	250
TEMPERATURE (°F)	406	406	406	406	170	406	120	406	100	172	650	650	650	350	406	406
LINE SIZE (IN)	2	4	2	4	6	3	8	3	4	4	6	6	3	36	2	2
PIPE MATERIAL/SPEC	3CS2S01	3CS2S01	3CS2S01	3CS2S01	1CS2S01	3CS2S01	1CS2S01	3CS2S01	1CS2S01	15CS2S01	15CS2S01	15CS2S01	15CS2S01	ALLOY 20	1CS2S01	3CS2S01

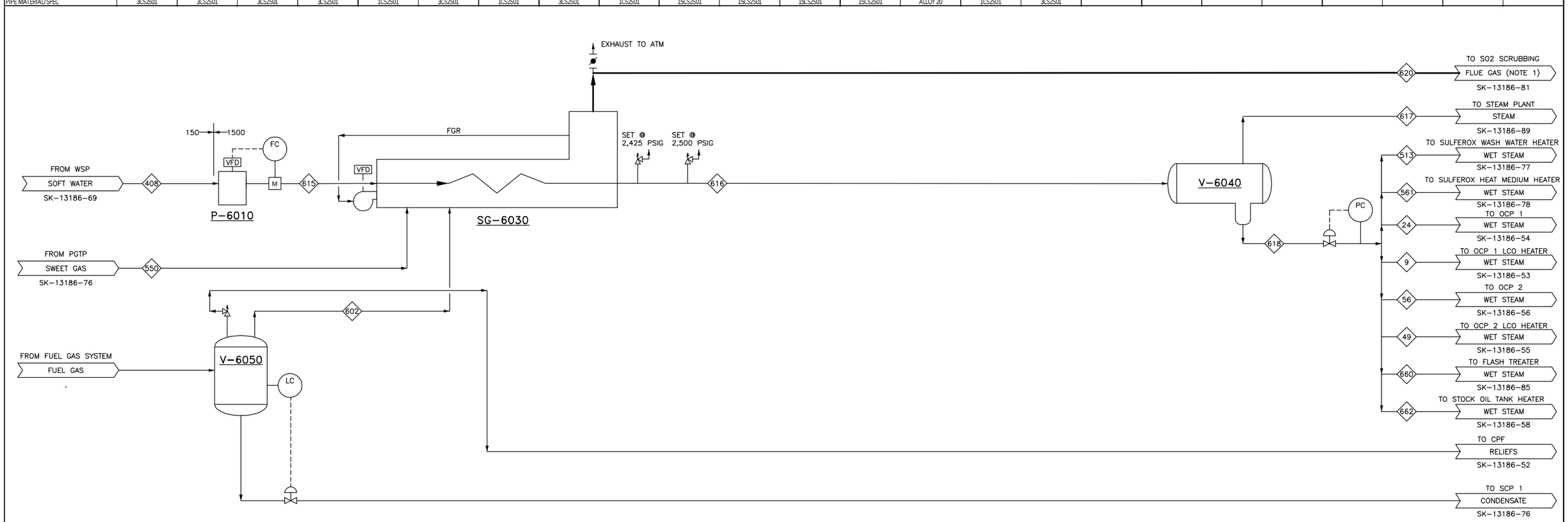

ITEM	PUMPS P-6010	ITEM	STEAM GENERATOR SG-6030	ITEM	VESSELS V-6040	V-6050
SERVICE	SOFT WATER CHARGE	SERVICE	PRODUCED GAS STEAM GENERATOR	SERVICE	UTILITY STEAM SEPARATOR	FUEL GAS SCRUBBER
DESIGN CAPACITY (BPD)	3,200	DUTY (MMBTU/HR)	62.5	DIMENSIONS	48"Ø x 12'-0"	8.625"Ø x 6'-6"
DESIGN HEAD (PSI)	2600	DESIGN PRESSURE (PSIG)	2,600	OPERATING/DESIGN PRESS (PSIG)	2,200 / 2,600	100 / 285
OPERATING/DESIGN TEMP (°F)	180 / 200	DESIGN TEMP (°F)	675	OPERATING/DESIGN TEMP (°F)	650 / 675	100 / 150
NPSHA/VAPOR PRESSURE (PSIA)		STEAM QUALITY (%)	70	DESIGN FLOW-GAS (MMSCFD)		2.0
HP	250	STEAM RATE (BPD)	3,200	DESIGN FLOW-STEAM (BPD)	4,000	
SKID DIMENSIONS		BLOWER	125 HP / 480 VAC / 1800 RPM	HOLDING CAPACITY (BBL)	7	
		EFFICIENCY (%)	84	REMARKS		
DESIGN & FABRICATION CODE	API 674	DESIGN & FABRICATION C	ASME SEC. I	DESIGN & FABRICATION CODE	ASME SEC. VIII	ASME SEC. VIII

NOTES:

1. SO2 SCRUBBER PLANNED IF SO2 FROM PGSG EXCEEDS 10 TONS/YR.

DWG NUMBER	TITLE
SK-13186-51	TITLE SHEET AND DRAWING INDEX – PROCESS

REFERENCE DRAWINGS

ISSUED FOR REVIEW
NOT FOR CONSTRUCTION

TJCROSS ENGINEERS

T.J. CROSS AUTOCAD CONTROL
SCALE: NONE
PLOT AT: 1:1
ENGINEER: WES
DATE STARTED: 09/30/13
FILE: 13186/SK1318680
LAYER(S): AERA
CHANGED BY: JJM
LAST CHANGED: 03/28/16

DATE	REV	DESCRIPTION	BY	APPR	AERA ENG
03/28/16	E2	REVISED IFR	JJM	SMH	EWP
07/18/14	E	ISSUED FOR REVIEW	OIC	SMH	EWP
06/24/14	D	REVISED PER AERA REVIEW	CJF	SMH	EWP
05/19/14	C	REVISED IFR	CJF	SMH	EWP
04/08/14	B	RE-ISSUED PER AERA COMMENTS	CJF	SMH	EWP
11/22/13	A	ISSUED FOR REVIEW	CJF	SMH	EWP

AERA

PROCESS FLOW DIAGRAM – PGSP – STEAM GENERATOR SG-6030
FIELD REDEVELOPMENT PROJECT
SECTION 30 T9N R32W
EAST CAT CANYON FIELD – SANTA BARBARA COUNTY – CA

AERA ENGINEER: ERIC PAULSON
CO. ENGINEER: TJ CROSS ENGINEERS, INC.
PROJ. MGR: ALI GOKGOZ
DESIGNED BY: TJ CROSS ENGINEERS, INC.
DRAFTED BY: OLIVIA CASTRO
ECCN NO.

DATE: 10/01/13
SCALE: NONE
ORIGINAL DWG NO.
NO. SK-13186-80
REV. E2
CAD FILE NO. SK1318680

:FUNCTIONAL LOCATION NO.

Stream Description / Process Parameter (OPERATING)	620 FLUE GAS TO PRIMARY ABSORBER	622 FLUE GAS TO SECONDARY ABSORBER	623 TREATED FLUE GAS TO WESP	624 25% CAUSTIC TO PRIMARY ABSORBER	625 25% CAUSTIC TO SECONDARY ABSORBER	626 SOFT WATER TO PRIMARY ABSORBER	627 SOFT WATER TO SECONDARY ABSORBER	629 AUTO SOFT WATER FILL TO SECONDARY ABSORBER	630 PRIMARY ABSORBER CAUSTIC SOLUTION RECYCLE TO PUMPS	631 SECONDARY ABSORBER CAUSTIC SOLUTION RECYCLE TO PUMPS	632 ANALYZER FLUID RETURN TO PRIMARY ABSORBER	633 ANALYZER FLUID RETURN TO SECONDARY ABSORBER	634 RECYCLE TO PRIMARY ABSORBER PACKING	635 RECYCLE TO SECONDARY ABSORBER PACKING	636 RECYCLE TO PRIMARY ABSORBER QUENCH	637 RECYCLE TO SECONDARY ABSORBER QUENCH	638 SECONDARY RECYCLE TO PRIMARY ABSORBER	639 ABSORBER WASTE TO WASTE TANK	653 25% CAUSTIC TO ABSORBERS FROM CAUSTIC PUMPS	655 SOFT WATER TO ABSORBERS				
OIL (BPD)																								
WATER \ CAUSTIC (BPD)				2.5 GPM	2.5 GPM	1 GPM	1 GPM		860 GPM	360 GPM									5 GPM	35 GPM				
CONDENSIBLE H.C. (BPD)																								
NON-CONDEN. GAS (MMSCFD)	18.2	18.2	18.2																					
WATER S.G. (W/60 F REF.)																								
GAS MW	28.5	28.5	28.5																					
PRESSURE (PSIG)	0	0	0	50	50	50	50	50	0	0	2	2	5	5	5	5	5	10	120	50				
TEMPERATURE (°F)	350	285	220	160	160	160	160	160	160	160	160	160	160	160	160	160	160	160	160	160				
LINE SIZE (IN)	36	36	36	1	1	2	2.5	1	10	10	1	1	8	8	2	2	2	4	2	2				
PIPE MATERIAL/SPEC	ALLOY 20	ALLOY 20	ALLOY 20	15D0D01	15D0D01	15D0D01	15D0D01	15D0D01	15D0D01	15D0D01	15D0D01	15D0D01	15D0D01	15D0D01	15D0D01	15D0D01	15D0D01	15D0D01	15D0D01	15D0D01				

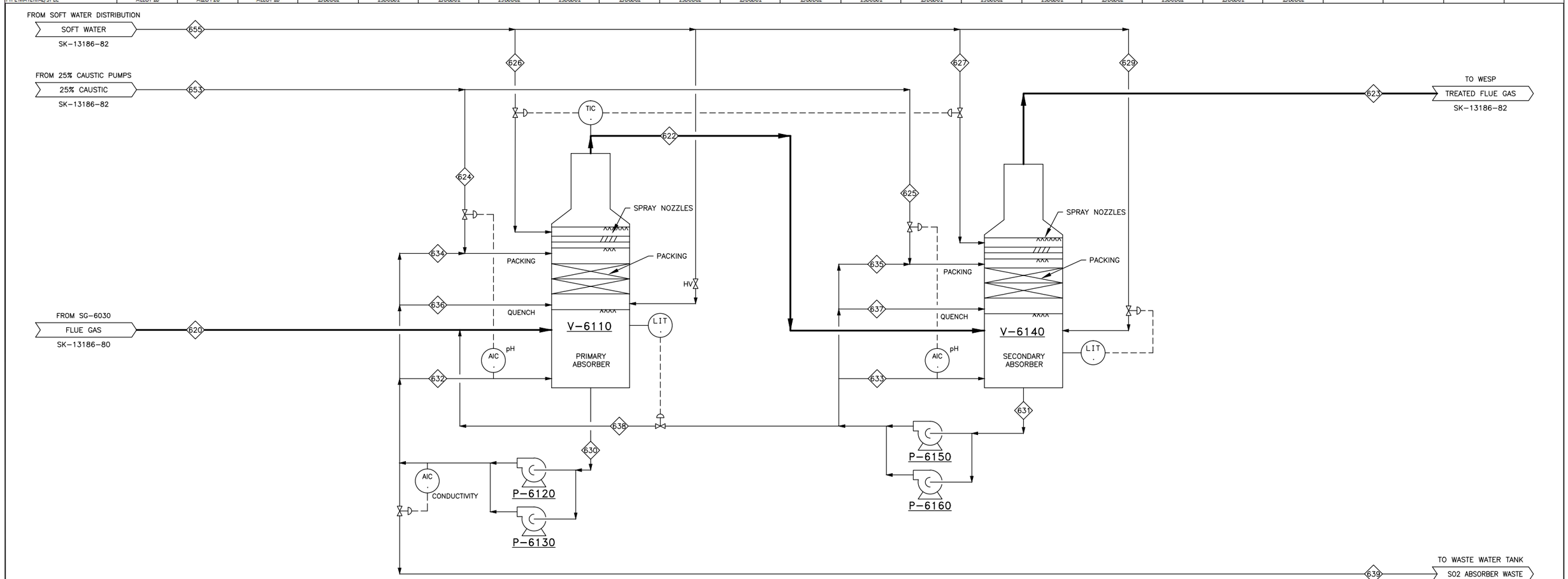

ITEM	VESSELS V-6110	V-6140	ITEM	PUMPS P-6120/6130	P-6150/6160
SERVICE	PRIMARY ABSORBER	SECONDARY ABSORBER	SERVICE	PRIMARY ABSORBER RECYCLE	SECONDARY ABSORBER RECYCLE
DIMENSIONS	8'-6"Ø x 31'-6" OAH	8'-6"Ø x 31'-6" OAH	DESIGN CAPACITY (GPM/BPD)	860 GPM	360 GPM
MAWP @ TEMP.	12 / -5.6 OSI @ 500 F / -20 F	12 / -5.6 OSI @ 500 F / -20 F	DESIGN HEAD (PSI)	100 FT TDH	100 FT TDH
CAPACITY, BBL	282	282	OPERATING/DESIGN TEMP (°F)	160 / 250	160 / 250
			HP	50	20
			PUMP SIZE	4" x 6" -13, IMP 10.625"	2" x 3" - 13, IMP 11.000"
			SKID DIMENSIONS		
REMARKS:	316L SS	316L SS	REMARKS:	GOULDS 3196	GOULDS 3196
DESIGN & FABRICATION CODE	ASME SEC. VIII	ASME SEC. VIII	DESIGN & FABRICATION CODE	ANSI B73.1	ANSI B73.1

DWG NUMBER	TITLE
SK-13186-51	TITLE SHEET AND DRAWING INDEX – PROCESS

REFERENCE DRAWINGS

ISSUED FOR REVIEW
NOT FOR CONSTRUCTION

TJCROSS ENGINEERS

T.J. CROSS AUTOCAD CONTROL
SCALE: NONE
PLOT AT: 1:1
ENGINEER: WES
DATE STARTED: 09/30/13
FILE: 13186/SK1318681
LAYER(S): AERA
CHANGED BY: OIC
LAST CHANGED: 07/18/14

DATE	REV	DESCRIPTION	BY	APPR	AERA ENG
07/18/14	E	ISSUED FOR REVIEW	OIC	SMH	EWP
06/24/14	D	REVISED PER AERA REVIEW	CJF	SMH	EWP
05/19/14	C	REVISED IFR	CJF	SMH	EWP
04/08/14	B	RE-ISSUED PER AERA COMMENTS	CJF	WES	EWP
11/22/13	A	ISSUED FOR REVIEW	CJF	SMH	EWP

AERA

PROCESS FLOW DIAGRAM – PGSG SO2 SCRUBBING
FIELD REDEVELOPMENT PROJECT
SECTION 30 T9N R32W
EAST CAT CANYON FIELD – SANTA BARBARA COUNTY – CA

AERA ENGINEER: ERIC PAULSON
CO. ENGINEER: TJ CROSS ENGINEERS, INC.
PROJ. MGR: ALI GOKGOZ
DESIGNED BY: TJ CROSS ENGINEERS, INC.
DRAFTED BY: OLIVIA CASTRO
ECCN NO.

DATE: 10/01/13
SCALE: NONE
ORIGINAL DWG NO.
NO. SK-13186-81
REV. E
CAD FILE NO. SK1318681

Process Parameter (OPERATING) \ Stream Description	407 SOFT WATER FROM SOFT WATER DISTRIBUTION SYSTEM	623 FLUE GAS FROM ABSORBERS TO WESP	639 ABSORBER WASTE TO WASTE TANK	640 TREATED FLUE GAS TO ID FAN	641 TREATED FLUE GAS TO VENT STACK	642 WESP WASTE TO WASTE TANK	643 SO2 ABSORBER WASTE TO WASTE PUMPS	644 ABSORBER WASTE TO WASTE WATER TANK	645 SOFT WATER TO 25% CAUSTIC TANK	646 25% CAUSTIC TO CAUSTIC PUMPS	647 25% CAUSTIC FROM PUMP DISCHARGE	648 25% CAUSTIC TO 1% CAUSTIC TANK	649 SOFT WATER TO 1% DILUTE CAUSTIC TANK	650 1% CAUSTIC TO DILUTE CAUSTIC PUMPS	651 1% CAUSTIC PUMP DISCH. TO WESP	652 SOFT WATER TO WESP FLUSH SYSTEM	653 25% CAUSTIC TO SO2 ABSORBERS	655 SOFT WATER TO SO2 ABSORBERS						
OIL (BPD)																								
WATER (BPD/GPM)	40 GPM						40 GPM	40 GPM		5 GPM	5 GPM						5 GPM	35 GPM						
CONDENSIBLE H.C. (BPD)																								
NON-CONDEN. GAS (MMSCFD)		21.6		21.6	21.6																			
WATER SG. (W/60 F REF.)																								
GAS MW																								
PRESSURE (PSIG)	50	0	10	0	0	2	0	35	50	0	120	3	3	0	120	50	120	50						
TEMPERATURE (°F)	160	220	160	220	220	160	160	160	160	160	160	160	160	160	160	160	160	160						
LINE SIZE (IN)	3	36	4	36	36	4	3	2	2	3	2	2	2	2	1	2	2	2						
PIPE MATERIAL/SPEC	1SD0D01	ALLOY 20	1SD0D01	ALLOY 20	ALLOY 20	1SD0D01	1SD0D01	1SD0D01	1SD0D01	1SD0D01	1SD0D01	1SD0D01	1SD0D01	1SD0D01	1SD0D01	1SD0D01	1SD0D01	1SD0D01						

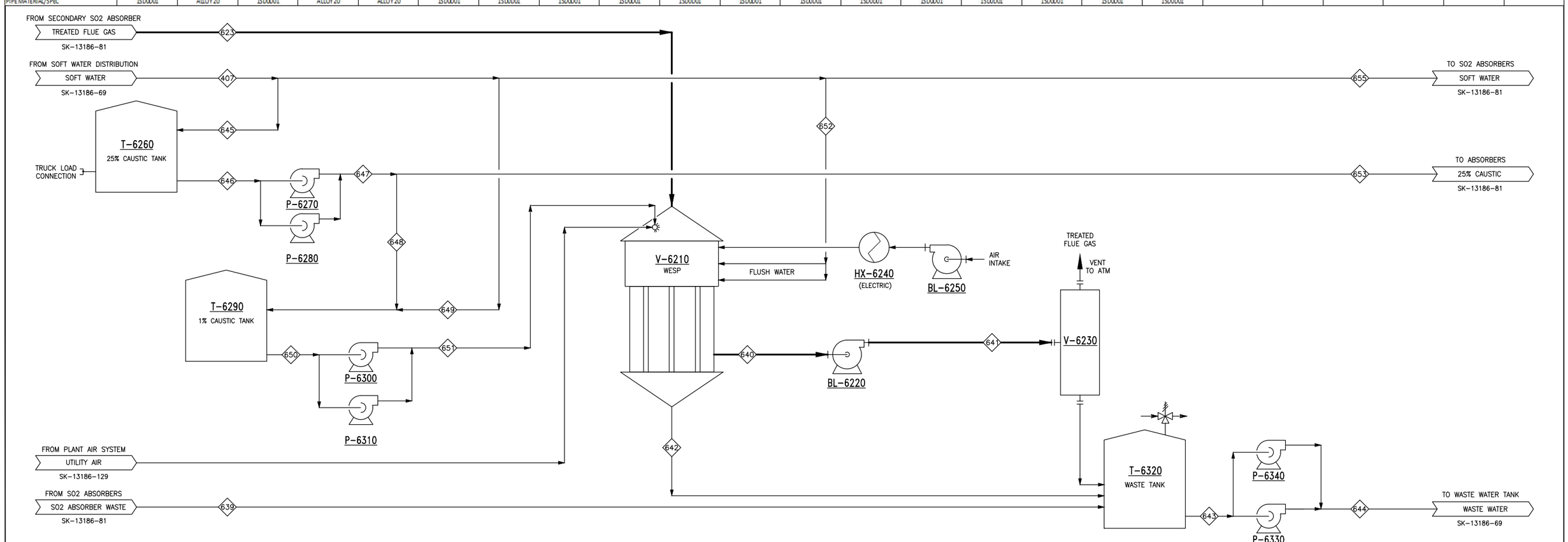

ITEM	VESSELS	ITEM	VENT STACK	ITEM	BLOWERS/HEAT EXCHANGERS			ITEM	TANKS			ITEM	PUMPS		
	V-6210		V-6230		BL-6220	HX-6240	BL-6250		T-6320	T-6260	T-6290		P-6270 / 6280	P-6300 / 6310	P-6330 / 6340
SERVICE	WESP	SERVICE	VENT STACK	SERVICE	WESP ID FAN	WESP AIR HEATER	WESP AIR BLOWER	SERVICE	WASTE TANK	25% CAUSTIC TANK	1% CAUSTIC TANK	SERVICE	25% CAUSTIC	1% CAUSTIC	WESP WASTE
DIMENSIONS	12'-0"Ø x 36'-10.5" OAH	DIMENSIONS	4'-0"Ø x 40'-0" OAH	DUTY (MBTU/HR)		92.2		DIMENSIONS	12'-0"Ø x 15'-0"	15'-6"Ø x 24'-0"	7'-11"Ø x 10'-0"	DESIGN CAPACITY (GPM/BPD)	40 GPM	5 GPM	45 GPM
GAS TEMPERATURE (°F)	145	OPERATE/DESIGN TEMP (°F)	ATM Pressure @ 200F/-20F	PROC. DP (PSI)				DESIGN PRESSURE (OSIG)	-0.5 / 16.0	-0.5 / 8.0	-0.5 / 16.0	DESIGN HEAD (PSI)	300 FT TDH	320 FT TDH	80 FT TDH
GAS PRESSURE (INWC)	1 INLET - 0 OUTLET	CAPACITY (BBL)	89.5	AIRFLOW (SCFM)/ TEMP IN/OUT (°F)	30000 / 200			OPERATING/DESIGN TEMP. (°F)	160 / 200	160 / 200	160 / 200	OPERATING/DESIGN TEMP (°F)	170	170	170
GAS HUMIDITY (%)	22.2			PROCESS TEMP IN/ OUT DESIGN (°F)	200			HOLDING CAPACITY (BBL)	300	750	90	HP	15	1.5	5
SO3 LOADING (gr/DSCF)	0.0535 INLET - 0.005 OUTLET			OPERATE/DESIGN PRESSURE (PSIG)								PUMP SIZE	1" X 1.5"-8	1 SV- 12 STAGE	1" X 1.5"-6
SO3 REMOVAL EFFICIENCY (%)	90%			HP / POWER	75	27 KW	2					SKID DIMENSIONS	-	-	-
	SS 316L			REMARKS:								REMARKS:	GOULDS 3296	GOULDS 1SV	GOULDS 3196 STi
DESIGN & FABRICATION CODE	ASME SEC. VIII	REMARKS	SA-240 316L	REMARKS:				DESIGN & FABRICATION CODE	API 12F	API 12F	API 12F	DESIGN & FABRICATION CODE	ANSI B73.1		ANSI B73.1

DWG NUMBER	TITLE
SK-13186-51	TITLE SHEET AND DRAWING INDEX – PROCESS

REFERENCE DRAWINGS

ISSUED FOR REVIEW
NOT FOR CONSTRUCTION

TJCROSS ENGINEERS

T.J. CROSS AUTOCAD CONTROL
SCALE: NONE
PLOT AT: 1:1
ENGINEER: WES
DATE STARTED: 09/30/13
FILE: 13186/SK1318682
LAYER(S): AERA
CHANGED BY: OIC
LAST CHANGED: 07/18/14

DATE	REV	DESCRIPTION	BY	APPR	AERA ENG
07/18/14	E	ISSUED FOR REVIEW	OIC	SMH	EWP
06/24/14	D	REVISED PER AERA REVIEW	CJF	SMH	EWP
05/19/14	C	REVISED IFR	CJF	SMH	EWP
04/08/14	B	RE-ISSUED PER AERA COMMENTS	CJF	SMH	EWP
11/22/13	A	ISSUED FOR REVIEW	CJF	SMH	EWP

AERA

PROCESS FLOW DIAGRAM – PGSG WESP
FIELD REDEVELOPMENT PROJECT
SECTION 30 T9N R32W
EAST CAT CANYON FIELD – SANTA BARBARA COUNTY – CA

AERA ENGINEER: ERIC PAULSON
CO. ENGINEER: TJ CROSS ENGINEERS, INC.
PROJ. MGR: ALI GOKGOZ
DESIGNED BY: TJ CROSS ENGINEERS, INC.
DRAFTED BY: OLIVIA CASTRO
ECCN NO.

DATE: 10/01/13 SCALE: NONE
ORIGINAL DWG NO.
NO. SK-13186-82 REV. E
CAD FILE NO. SK1318682

Process Parameter (OPERATING) \ Stream Description	14 OILY SOLIDS FROM OCP 1	226 STEAM CONDENSATE FROM STOCK OIL HEATER	330 SKIM OIL FROM WCP 1	332 JET WATER FROM DESANDER PUMPS	344 OILY SOLIDS FROM WCP 1 FILTER BACKWASH TANK	546 CONDENSATE FROM PRODUCED GAS TREATING PLANT	563 STEAM CONDENSATE FROM PRODUCED GAS TREATING PLANT	701 OILY SOLIDS TO SLUDGE TANK	702 SKIM OIL TO SKIM OIL TANK	703 SLUDGE TANK SKIMS TO SKIM OIL TANK	704 SLUDGE TANK BOTTOMS TO CENTRIFUGE CHARGE PUMPS	705 SLUDGE TANK BOTTOMS TO CENTRIFUGE UNIT	706 CENTRIFUGE LIQUID RETURN TO SLUDGE TANK	707 EMULSION FROM SKIM TANK TO FLASH TREATER CHARGE PUMPS	708 PRODUCED WATER FROM SKIM OIL TANK TO WATER TRANSFER PUMPS	709 EMULSION FROM SCP 1 SKIM OIL CHARGE PUMP	710 SKIM OIL TANK PRODUCED WATER TO WCP 1	711 EMULSION FROM SCP 2 SKIM OIL CHARGE PUMP	712 SCP 1/2 EMULSION TO FLASH TREATER (HOLD)	713 CENTRIFUDGED SOLIDS TO TRUCK BIN	714 TVR CONDENSATE TO SCP 2 SKIM OIL TANK	941 OCP TVR CONDENSATE TO SCP 1/2 SKIM OIL TANKS	912 TVR CONDENSATE TO SCP 1/2 SKIM OIL TANKS
OIL (BPD)						10			6					6		6		6	12		6	2	
WATER (BPD)	321	220	1,094	107	107	1,066	268	428	1.948	535	535	535	535	6	2,477	6	2,477	6	12		854	94	60
SAND (TONS/DAY)	2.5							2.5			2.5	2.5								2.5			
NON-CONDEN. GAS (MMSCFD)																							
WATER SG. (W/60 F REF.)	1.003	1.003	1.003	1.003	1.003	1.003	1.003	1.003	1.003	1.003	1.003	1.003	1.003	1.003	1.003	1.003	1.003	1.003	1.003		1.003	1.003	1.003
GAS MW																							
PRESSURE (PSIG)	8	8	8	35	8	13	250	8	8	0	0	30	10	0	0	45	50	45	45		6	30	6
TEMPERATURE (°F)	175	210	180	175	175	180	298	175	180	175	175	175	175	180	180	180	180	180	180		120	120	120
LINE SIZE (IN)	4	1	6	4	4	3	3	4	6	4	3	2	2	6	6	4	4	4	4		2	2	2
PIPE MATERIAL/SPEC	1CS2S01	1CS2S01	1CS2S01	1CS2S01	1CS2S01	1CS2S01	1CS2S01	1CS2S01	1CS2S01	1CS2S01	1CS2S01	1CS2S01	1CS2S01	1CS2S01	1CS2S01	1CS2S01	1CS2S01	1CS2S01	1CS2S01		1CS2S01	1CS2S01	1CS2S01

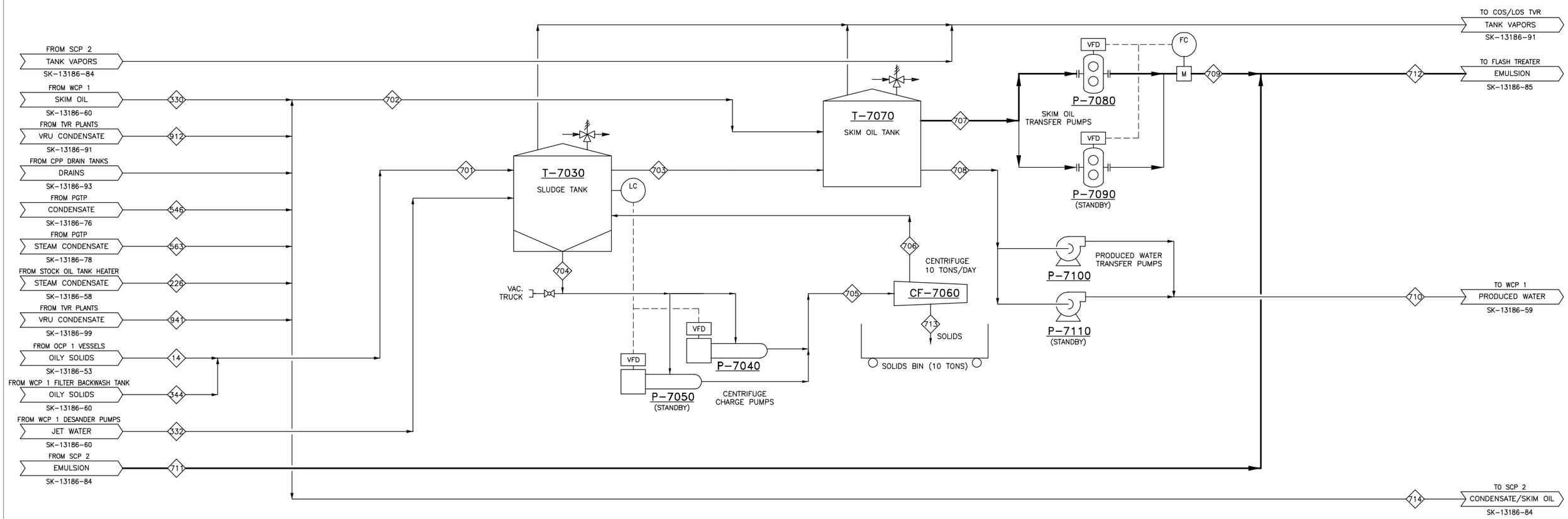

ITEM	TANKS		ITEM	CENTRIFUGES	ITEM	PUMPS		
	T-7030	T-7070		CF-7060		P-7040/7050	P-7080/7090	P-7100/7110
SERVICE	SLUDGE	SKIM OIL	SERVICE	SLUDGE LIQUID DESANDING	SERVICE	CENTRIFUGE FEED	SKIM OIL TANK OIL TRANSFER	SKIM OIL TANK WATER TRANSFER
DIMENSIONS	21'-6" Ø x 16'-0" H (7'-0" CONE)	21'-6"Ø x 16'-0" H	DIMENSIONS	89" L x 44" W x 27" H	DESIGN CAPACITY (GPM/BPD)	35 GPM	50 GPM	150 GPM
OPERATE/DESIGN PRESSURE (OSIG)	-1.0 / 6.0	-1.0 / 6.0	OPERATING/DESIGN CAPACITY, GPM	30 GPM	DESIGN HEAD (PSI)	30	45	50
OPERATE/DESIGN TEMPERATURE (°F)	180 / 250	180 / 250	HP	20	OPERATING/DESIGN TEMP (°F)	180 / 250	180 / 250	180 / 250
HOLDING CAPACITY (BBL)	1,000	1,000			NPSHA/VAPOR PRESSURE (PSIA)			
					HP	2	2	7.5
					SKID DIMENSIONS			
REMARKS:								
DESIGN & FABRICATION CODE	API 650	API 650	REMARKS:	CENTRISYS CS10-4	DESIGN & FABRICATION CODE	API 676	API 676	ANSI B73.1

SK-13186-51	TITLE SHEET/DRAWING INDEX – PROCESS
DWG NUMBER	TITLE

REFERENCE DRAWINGS

ISSUED FOR REVIEW
NOT FOR CONSTRUCTION

TJCROSS ENGINEERS

T.J. CROSS AUTOCAD CONTROL

SCALE: NONE
PLOT AT: 1:1
ENGINEER: WES
DATE STARTED: 09/11/13
FILE: 13186/SK1318683
LAYER(S): AERA
CHANGED BY: AMW
LAST CHANGED: 01/20/15

DATE	REV	DESCRIPTION	BY	APPR	AERA ENG
01/20/16	E2	REVISED IFR	AMW	SMH	EWP
07/18/14	E	ISSUED FOR REVIEW	OIC	SMH	EWP
06/24/14	D	REVISED PER AERA REVIEW	CJF	SMH	EWP
05/19/14	C	REVISED IFR	CJF	SMH	EWP
04/08/14	B	RE-ISSUED PER AERA COMMENTS	CJF	SMH	EWP
11/27/13	A	ISSUED FOR REVIEW	CJF	SMH	EWP

AERA

PROCESS FLOW DIAGRAM – SCP 1 SLUDGE TANK, SKIM TANK & CENTRIFUGE
FIELD REDEVELOPMENT PROJECT
SECTION 30 T9N R32W
EAST CAT CANYON FIELD – SANTA BARBARA COUNTY – CA

AERA ENGINEER: ERIC PAULSON
CO. ENGINEER: TJ CROSS ENGINEERS, INC.
PROJ. MGR: ALI GOKGOZ
DESIGNED BY: TJ CROSS ENGINEERS INC.
DRAFTED BY: OLIVIA CASTRO
ECCN NO.

DATE: 09/13/13
SCALE: NONE
ORIGINAL DWG NO.
NO. SK-13186-83
REV. E2
CAD FILE NO. SK1318683

Stream Description / Process Parameter (OPERATING)	72 OILY SOLIDS FROM OCP 2	330 SKIM OIL FROM WCP 2	332 JET WATER FROM WCP 2 DESANDER PUMPS	344 OILY SOLIDS FROM WCP 2 FILTER BACKWASH TANK	701 OILY SOLIDS TO SLUDGE TANK	702 SKIM OIL TO SKIM OIL TANK	703 SLUDGE TANK SKIMS TO SKIM OIL TANK	704 SLUDGE TANK BOTTOMS TO CENTRIFUGE CHARGE PUMPS	705 SLUDGE TANK BOTTOMS TO CENTRIFUGE UNIT	706 CENTRIFUGE LIQUID RETURN TO SLUDGE TANK	707 EMULSION FROM SKIM TANK TO FLASH TREATER CHARGE PUMPS	708 PRODUCED WATER FROM SKIM OIL TANK TO WATER TRANSFER PUMPS	710 SKIM OIL TANK PRODUCED WATER TO WCP 2	711 EMULSION FROM SCP 2 TO FLASH TREATER	713 CENTRIFUDGED SOLIDS TO TRUCK BIN	714 TVR CONDENSATE TO SCP 2 SKIM OIL TANK								
OIL (BPD)						6					6			6		6								
WATER (BPD)	321	1,094	107	107	428	1,948	535	535	535	535	6	2,477	2,477	6		854								
SAND (TONS/DAY)	2.5				2.5			2.5	2.5						2.5									
NON-CONDEN. GAS (MMSCFD)																								
WATER SG. (W/60 F REF.)	1.003	1.003	1.003	1.003	1.003	1.003	1.003	1.003	1.003	1.003	1.003	1.003	1.003	1.003		1.003								
GAS MW														0										
PRESSURE (PSIG)	8	8	35	8	16	6	0	0	30	10	0	0	50	45		6								
TEMPERATURE (°F)	175	180	175	175	350	180	175	175	175	175	180	180	180	180		120								
LINE SIZE (IN)	4	6	4	4	8	6	4	3	3	2	6	6	6	4		2								
PIPE MATERIAL/SPEC	1CS2S01	1CS2S01	1CS2S01	1CS2S01	1CS2S01	1CS2S01	1CS2S01	1CS2S01	1CS2S01	1CS2S01	1CS2S01	1CS2S01	1CS2S01	1CS2S01		1CS2S01								

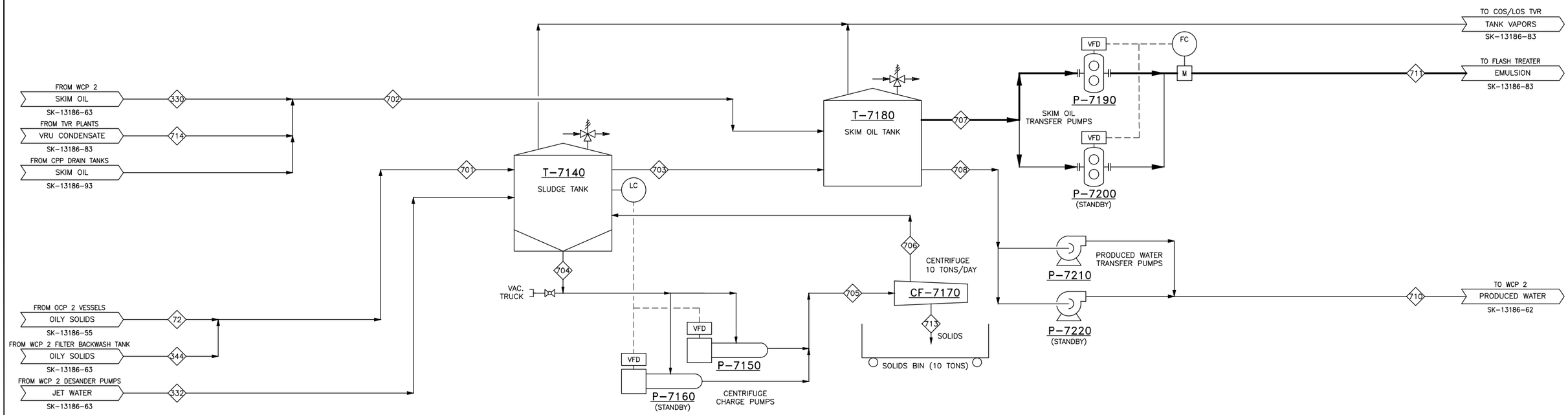

ITEM	TANKS T-7140	TANKS T-7180	ITEM	CENTRIFUGES CF-7170	ITEM	PUMPS P-7150/7160	PUMPS P-7190/7200	PUMPS P-7210/7220
SERVICE	SLUDGE	SKIM OIL	SERVICE	SLUDGE LIQUID DESANDING	SERVICE	CENTRIFUGE FEED	SKIM OIL TANK OIL TRANSFER	SKIM OIL TANK WATER TRANSFER
DIMENSIONS	21'-6" Ø x 16'-0" H (7'-0" CONE)	21'-6"Ø x 16'-0" H	DIMENSIONS	89" L x 44" W x 27" H	DESIGN CAPACITY (GPM/BPD)	35 GPM	50 GPM	150 GPM
OPERATE/DESIGN PRESSURE (OSIG)	-1.0 / 6.0	-1.0 / 6.0	OPERATING/DESIGN CAPACITY, GPM	30 GPM	DESIGN HEAD (PSI)	30	45	50
OPERATE/DESIGN TEMPERATURE (°F)	180 / 250	180 / 250	HP	20	OPERATING/DESIGN TEMP (°F)	180 / 250	180 / 250	180 / 250
HOLDING CAPACITY (BBL)	1,000	1,000			NPSHA/VAPOR PRESSURE (PSIA)			
					HP	2	2	7.5
					SKID DIMENSIONS			
REMARKS:								
DESIGN & FABRICATION CODE	API 650	API 650	REMARKS:	CENTRISYS CS10-4	DESIGN & FABRICATION CODE	API 676	API 676	ANSI B73.1

DWG NUMBER	TITLE
SK-13186-51	TITLE SHEET/DRAWING INDEX – PROCESS

REFERENCE DRAWINGS

ISSUED FOR REVIEW
NOT FOR CONSTRUCTION

TJCROSS ENGINEERS

T.J. CROSS AUTOCAD CONTROL

SCALE: NONE
PLOT AT: 1:1
ENGINEER: WES
DATE STARTED: 09/11/13
FILE: 13186/SK1318684
LAYER(S): AERA
CHANGED BY: OIC
LAST CHANGED: 07/18/14

DATE	REV	DESCRIPTION	BY	APPR	AERA ENG
07/18/14	E	ISSUED FOR REVIEW	OIC	SMH	EWP
06/24/14	D	REVISED PER AERA REVIEW	CJF	SMH	EWP
05/19/14	C	REVISED IFR	CJF	SMH	EWP
04/08/14	B	RE-ISSUED PER AERA COMMENTS	CJF	SMH	EWP
11/27/13	A	ISSUED FOR REVIEW	CJF	SMH	EWP

AERA

PROCESS FLOW DIAGRAM – SCP 2 SLUDGE TANK, SKIM TANK & CENTRIFUGE
FIELD REDEVELOPMENT PROJECT
SECTION 30 T9N R32W
EAST CAT CANYON FIELD – SANTA BARBARA COUNTY – CA

AERA ENGINEER: ERIC PAULSON
CO. ENGINEER: TJ CROSS ENGINEERS, INC.
PROJ. MGR: ALI GOKGOZ
DESIGNED BY: TJ CROSS ENGINEERS INC.
DRAFTED BY: OLIVIA CASTRO
ECCN NO.

DATE: 09/13/13
SCALE: NONE
ORIGINAL DWG NO.
NO. SK-13186-84
REV. E
CAD FILE NO. SK1318684

Stream Description / Process Parameter (OPERATING)	660 WET STEAM TO FLASH TREATER HEATER (HOLD)	712 EMULSION FROM SCP 1/2 (HOLD)	715 EMULSION TO FLASH TRATER HEATERS (HOLD)	717 HOT EMULSION TO FLASH TREATER (HOLD)	718 TREATED HEAVY CRUDE OIL TO COS (HOLD)	719 PRODUCED WATER FROM FLASH TREATER (HOLD)	724 STEAM CONDENSATE FROM FLASH TREATER HEATER (HOLD)	727 STEAM CONDENSATE AND PRODUCED WATER TO WCP 1/2 (HOLD)
OIL (BPD)		12	12	12	12			
WATER\ STEAM (BPD)	148	12	36	36		36	148	92
STEAM QUALITY (%)	44%						0%	
NON-CONDEN. GAS (MMSCFD)								
WATER SG. (W/60 F REF.)	1.003	1.003	1.003	1.003		1.003	1.003	1.003
GAS MW								
PRESSURE (PSIG)	250	45					250	
TEMPERATURE (°F)	406	180					406	
LINE SIZE (IN)	2	4	4	4	4	4	1	4
PIPE MATERIAL/SPEC	3CS2501	1CS2501	1CS2501	1CS2501	1CS2501	1CS2501	3CS2501	#REF!

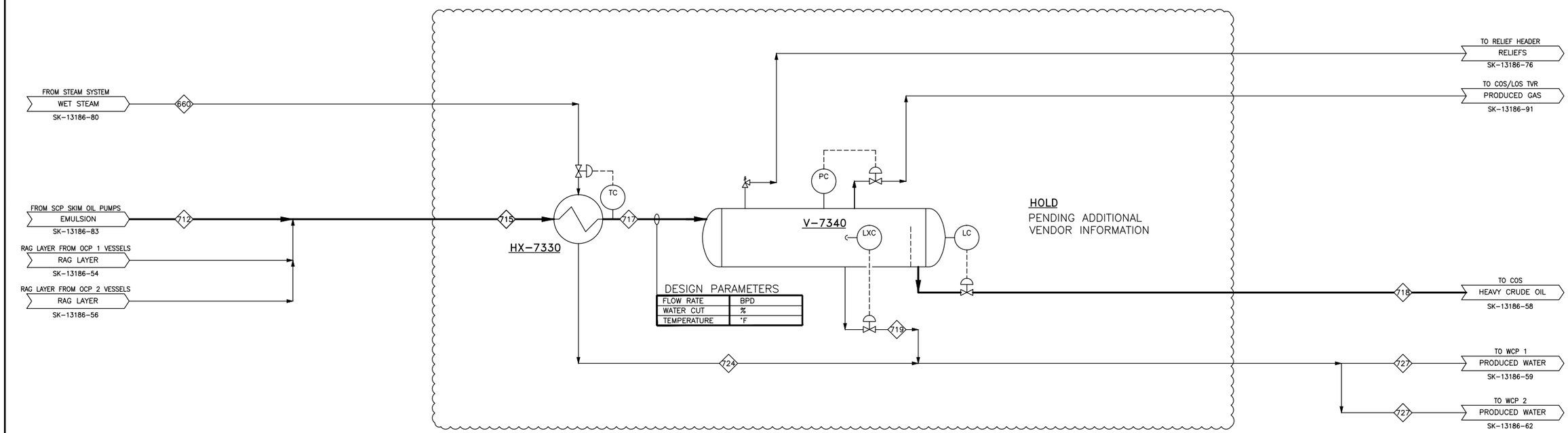

ITEM	HEAT EXCHANGERS	ITEM	VESSELS
	HX-7330		V-7340
SERVICE	EMULSION HEATING (HOLD)	SERVICE	FLASH TREATER (HOLD)
DUTY (MMBTU/HR)		DIMENSIONS	
PROCESS DP (PSI)		OPERATE/DESIGN PRESS (PSIG)	
SHELL SIDE TEMP IN/OUT (°F)		OPERATE/DESIGN TEMP (°F)	
TUBE SIDE TEMP IN/OUT (°F)		DESIGN FLOW-GAS (MMSCFD)	
OPERATE/DESIGN PRESSURE (PSIG)		DESIGN FLOW-LIQUID (BPD)	
DESIGN TEMPERATURE (°F)			
DIMENSIONS			
DESIGN & FABRICATION CODE		DESIGN & FABRICATION CODE	ASME SEC. VIII

DWG NUMBER	TITLE
SK-13186-51	TITLE SHEET/DRAWING INDEX – PROCESS

REFERENCE DRAWINGS

ISSUED FOR REVIEW
NOT FOR CONSTRUCTION

TJCROSS ENGINEERS

T.J. CROSS AUTOCAD CONTROL
SCALE: NONE
PLOT AT: 1:1
ENGINEER: WES
DATE STARTED: 09/02/13
FILE: 13186/SK1318685
LAYER(S): AERA
CHANGED BY: OIC
LAST CHANGED: 07/18/14

DATE	REV	DESCRIPTION	BY	APPR	AERA ENG
07/18/14	E	ISSUED FOR REVIEW	OIC	SMH	EWP
06/24/14	D	REVISED PER AERA REVIEW	CJF	SMH	EWP
05/19/14	C	REVISED IFR	CJF	SMH	EWP
04/08/14	B	RE-ISSUED PER AERA COMMENTS	CJF	SMH	EWP
11/27/13	A	ISSUED FOR REVIEW	CJF	SMH	EWP

AERA

PROCESS FLOW DIAGRAM – SCP FLASH TREATER
FIELD REDEVELOPMENT PROJECT
SECTION 30 T9N R32W
EAST CAT CANYON FIELD – SANTA BARBARA COUNTY – CA

AERA ENGINEER: ERIC PAULSON
CO. ENGINEER: TJ CROSS ENGINEERS, INC.
PROJ. MGR: ALI GOKGOZ
DESIGNED BY: TJ CROSS ENGINEERS, INC.
DRAFTED BY: OLIVIA CASTRO
ECCN NO.

DATE: 09/13/13
SCALE: NONE
ORIGINAL DWG NO.
NO. SK-13186-85
REV. E
CAD FILE NO. SK1318685

:FUNCTIONAL LOCATION NO.

STREAM DESCRIPTION / PROCESS PARAMETER (OPERATING)	409 SOFT WATER FROM SOFT WATER DISTRIBUTION	802 SOFT WATER TO STEAM GEN. FEED PUMP	803 STEAM GEN. FEED WATER TO PREHEATER EXCHANGER	804 PREHEATED FEED WATER TO STEAM GENERATOR	805 WET STEAM FROM STEAM GENERATOR TO STEAM HEADER	806 HOT HEAT MEDIUM FROM OCP 1 COOLERS	807 HOT HEAT MEDIUM TO STEAM GEN. PREHEATER EXCHANGER	808 COOL HEAT MEDIUM FROM STEAM GEN. PREHEATER EXCHANGER	811 COOL HEAT MEDIUM TO TRIM COOLERS	812 SOFT WATER TO TRAIN 2 STEAM GENERATORS	815 WET STEAM FROM STEAM GENERATORS TO STEAM HEADER	821 STEAM GENERATOR FUEL GAS FROM FUEL GAS SCRUBBER	551 SWEET PRODUCED GAS TO SGS
STEAM QUALITY (%)	0%	0%	0%	0%	70%					0%	70%		
WATER\ STEAM (BPD)	30,000	5,000	5,000	5,000	5,000					15,000	15,000		
GLYCOL (BPD)						30,408	10,136	10,136	30,408				
NON-CONDEN. GAS (MMSCFD)												6.0	1.9786
WATER SG. (W/60 F REF.)	1.003	1.003	1.003	1.003	1.003					1.003	1.003		
GAS MW												18.3	100.0
PRESSURE (PSIG)	74	74	2,450	2,450	2,200	84	84	79	79	74	2,200	100	
TEMPERATURE (°F)	170	170	172	227	650	242	242	212	212	170	650	80	120
LINE SIZE (IN)	8	6	4	4	6	8	4	4	8	6	10	8	4
PIPE MATERIAL/SPEC	3S00D01	3S00D01	1S5D0D01	1S5D0D01	1SCS1501	1CS2501	1CS2501	1CS2501	1CS2501	1S00D01	1SCS1501	1CS2501	

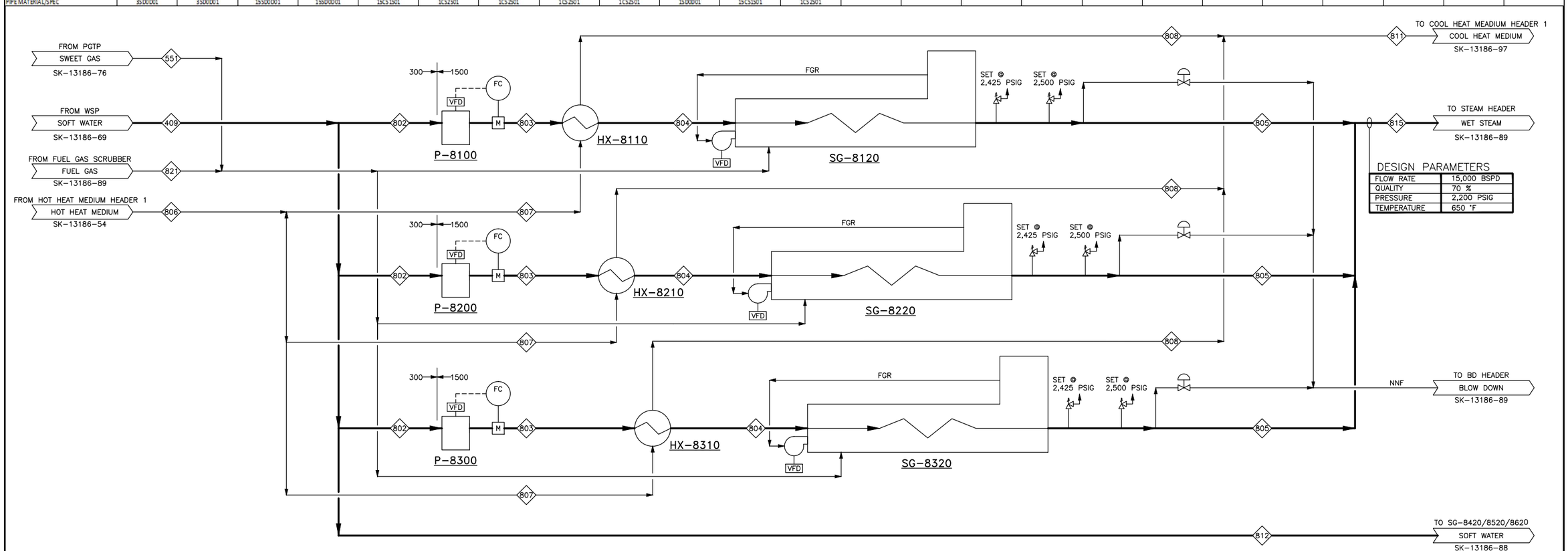

DESIGN PARAMETERS

FLOW RATE	15,000 BSPD
QUALITY	70 %
PRESSURE	2,200 PSIG
TEMPERATURE	650 °F

ITEM	PUMPS	ITEM	HEAT EXCHANGERS	ITEM	STEAM GENERATORS
	P-8100/8200/8300		HX-8110/8210/8310		SG-8120/8220/8320
SERVICE	FEED WATER PUMPS	SERVICE	FEED WATER PRE-HEATER	SERVICE	STEAM GENERATOR
DESIGN CAPACITY (BPD)	5,900	DUTY (MMBTU/HR)	5.2	DESIGN CAPACITY, MMBTU/hr	85
DESIGN HEAD (PSI)	2,600	PROCESS DP (PSI)	5	DESIGN PRESSURE (PSIG)	2,600
OPERATING/DESIGN TEMP (°F)	172 / 200	SHELL SIDE TEMP IN/OUT (°F)	242 / 212	DESIGN TEMP (°F)	675
NPSHA/VAPOR PRESSURE (PSIA)		TUBE SIDE TEMP IN/OUT (°F)	172 / 227	STEAM QUALITY (%)	60-75
BH/HP/SG	350 (VFD)	DESIGN PRESS. (PSIG)	SH: 150/ T: 2,600	STEAM RATE (BPD)	5,900
SKID DIMENSIONS		DESIGN TEMPERATURE (°F)	300	BLOWER	150 HP / 480 VAC / 1800 RPM
		DIMENSIONS		EFFICIENCY (%)	85
DESIGN & FABRICATION CODE	API 674	DESIGN & FABRICATION CODE	TEMA	DESIGN & FABRICATION CODE	ASME SEC. I

DWG NUMBER	TITLE
SK-13186-51	TITLE SHEET/DRAWING INDEX – PROCESS

REFERENCE DRAWINGS

ISSUED FOR REVIEW
NOT FOR CONSTRUCTION

TJCROSS ENGINEERS

T.J. CROSS AUTOCAD CONTROL
SCALE: NONE
PLOT AT: 1:1
ENGINEER: WES
DATE STARTED: 10/08/13
FILE: 13186/SK1318687
LAYER(S): AERA
CHANGED BY: CJF
LAST CHANGED: 11/02/15

DATE	REV	DESCRIPTION	BY	APPR	AERA ENG
11/02/15	E1	ISSUED FOR REVIEW	CJF	SMH	EWP
07/18/14	E	ISSUED FOR REVIEW	OIC	SMH	EWP
06/24/14	D	REVISED PER AERA REVIEW	WES	SMH	EWP
05/19/14	C	REVISED IFR	CFJ	SMH	EWP
04/08/14	B	RE-ISSUED PER AERA COMMENTS	CFH	SMH	EWP
11/07/13	A	ISSUED FOR REVIEW	CFH	SMH	EWP

AERA

PROCESS FLOW DIAGRAM – SGS – STEAM GENERATORS SG-8120/8220/8320
FIELD REDEVELOPMENT PROJECT
SECTION 30 T9N R22W
EAST CAT CANYON FIELD – SANTA BARBARA COUNTY – CALIFORNIA

AERA ENGINEER: ERIC PAULSON
CO. ENGINEER: TJ CROSS ENGINEERS, INC
PROJ. MGR: ALI GOKGOZ
DESIGNED BY: TJ CROSS ENGINEERS, INC
DRAFTED BY: OLIVIA CASTRO
ECCN NO.

DATE: 10/08/13
SCALE: NONE
ORIGINAL DWG NO.
NO. SK-13186-87
REV. E1
CAD FILE NO. SK1318687

:FUNCTIONAL LOCATION NO.

STREAM DESCRIPTION / PROCESS PARAMETER (OPERATING)	802	803	804	805	806	807	808	811	812	815	821
	SOFT WATER TO STEAM GEN. FEED PUMP	STEAM GEN. FEED WATER TO PREHEATER EXCHANGER	PREHEATED FEED WATER TO STEAM GENERATOR	WET STEAM FROM STEAM GENERATOR TO STEAM HEADER	HOT HEAT MEDIUM FROM OCP 2 COOLERS	HOT HEAT MEDIUM TO STEAM GEN. PREHEATER EXCHANGER	COOL HEAT MEDIUM FROM STEAM GEN. PREHEATER EXCHANGER	COOL HEAT MEDIUM TO TRIM COOLERS	SOFT WATER TO TRAIN 2 STEAM GENERATORS	WET STEAM FROM STEAM GENERATORS TO STEAM HEADER	STEAM GENERATOR FUEL GAS FROM FUEL GAS SCRUBBER
STEAM QUALITY (%)	0%	0%	0%	70%					0%	70%	
WATER\ STEAM (BPD)	5,000	5,000	5,000	5,000					15,000	15,000	
GLYCOL (BPD)					30,408	10,136	10,136	30,408			
NON-CONDEN. GAS (MMSCFD)											6.0
WATER SG. (W/60 F REF.)	1.003	1.003	1.003	1.003					1.003	1.003	
GAS MW											18.3
PRESSURE (PSIG)	74	2,450	2,450	2,200	84	84	79	79	74	2,200	100
TEMPERATURE (°F)	170	172	227	650	242	242	212	212	170	650	80
LINE SIZE (IN)	6	4	4	6	8	4	4	8	6	10	8
PIPE MATERIAL/SPEC	3S00D01	1SS00D01	1SS00D01	1SCS1501	1CS2501	1CS2501	1CS2501	1CS2501	3S00D01	1SCS1501	1CS2501

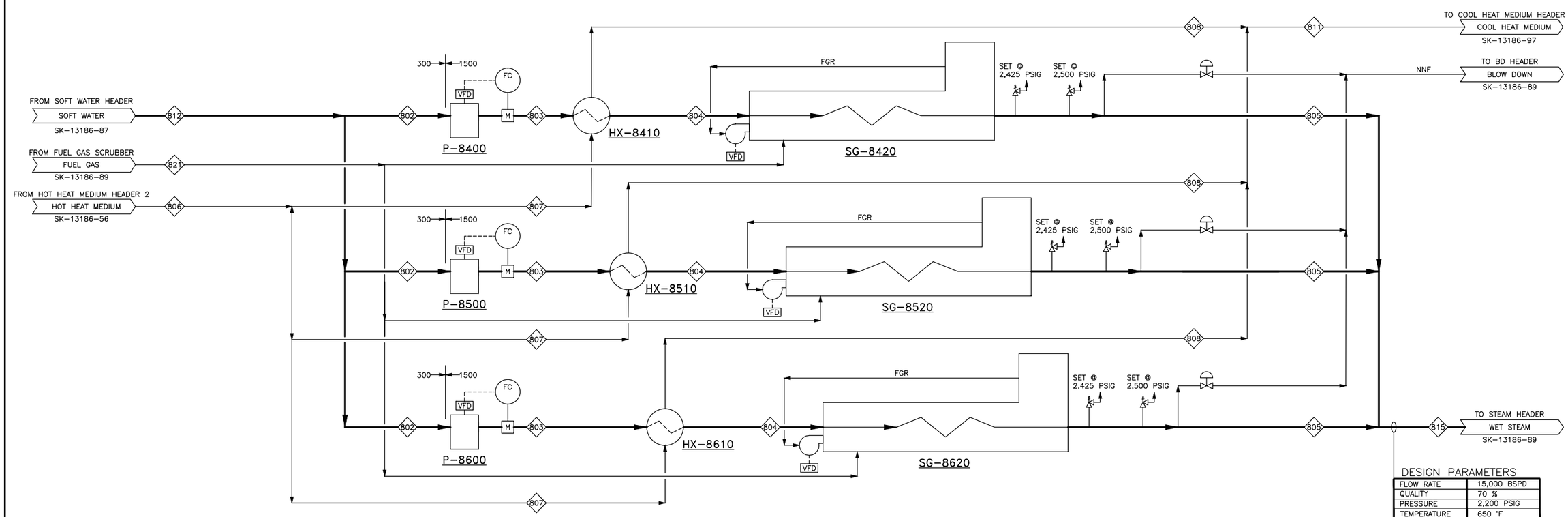

DESIGN PARAMETERS

FLOW RATE	15,000 BSPD
QUALITY	70 %
PRESSURE	2,200 PSIG
TEMPERATURE	650 °F

ITEM	PUMPS	ITEM	HEAT EXCHANGERS	ITEM	STEAM GENERATORS
	P-8400/8500/8600		HX-8410/8510/8610		SG-8420/8520/8620
SERVICE	FEED WATER PUMPS	SERVICE	FEED WATER PRE-HEATER	SERVICE	STEAM GENERATOR
DESIGN CAPACITY (BPD)	5,900	DUTY (MMBTU/HR)	5.2	DESIGN CAPACITY , MMBTU/hr	85
DESIGN HEAD (PSI)	2,600	PROCESS DP (PSI)	5	DESIGN PRESSURE (PSIG)	2,600
OPERATING/DESIGN TEMP (°F)	172 / 200	SHELL SIDE TEMP IN/OUT (°F)	242 / 212	DESIGN TEMP (°F)	675
NPSHA/VAPOR PRESSURE (PSIA)		TUBE SIDE TEMP IN/OUT (°F)	172 / 227	STEAM QUALITY (%)	60 -75
BH/HP/SG	350 (VFD)	DESIGN PRESS. (PSIG)	SH: 150/ T: 2,600	STEAM RATE (BPD)	5,900
SKID DIMENSIONS		DESIGN TEMPERATURE (°F)	300	BLOWER	150 HP / 480 VAC / 1800 RPM
		DIMENSIONS		EFFICIENCY (%)	85
DESIGN & FABRICATION CODE	API 674	DESIGN & FABRICATION CODE	TEMA	DESIGN & FABRICATION CODE	ASME SEC. I

DWG NUMBER	TITLE
SK-13186-51	TITLE SHEET/DRAWING INDEX – PROCESS

REFERENCE DRAWINGS

ISSUED FOR REVIEW
NOT FOR CONSTRUCTION

TJCROSS ENGINEERS

T.J. CROSS AUTOCAD CONTROL
SCALE: NONE
PLOT AT: 1:1
ENGINEER: WES
DATE STARTED: 10/08/13
FILE: 13186/SK1318688
LAYER(S): AERA
CHANGED BY: OIC
LAST CHANGED: 07/18/14

DATE	REV	DESCRIPTION	BY	APPR	AERA ENG
07/18/14	E	ISSUED FOR REVIEW	OIC	SMH	EWP
06/24/14	D	REVISED PER AERA REVIEW	CJF	SMH	EWP
05/19/14	C	REVISED IFR	CJF	SMH	EWP
04/08/14	B	RE-ISSUED PER AERA COMMENTS	CFH	SMH	EWP
11/07/13	A	ISSUED FOR REVIEW	CFH	SMH	EWP

AERA

PROCESS FLOW DIAGRAM – SGS – STEAM GENERATORS SG-4320/8520/8620
FIELD REDEVELOPMENT PROJECT
SECTION 30 T9N R32W
EAST CAT CANYON FIELD – SANTA BARBARA COUNTY – CALIFORNIA

AERA ENGINEER: ERIC PAULSON
CO. ENGINEER: TJ CROSS ENGINEERS, INC.
PROJ. MGR: ALI GOKGOZ
DESIGNED BY: TJ CROSS ENGINEERS, INC.
DRAFTED BY: OLIVIA CASTRO
ECCN NO.

DATE: 10/10/13
SCALE: NONE
ORIGINAL DWG NO.
NO. SK-13186-88
REV. E
CAD FILE NO. SK1318688

:FUNCTIONAL LOCATION NO.

STREAM DESCRIPTION / PROCESS PARAMETER (OPERATING)	617 STEAM FROM PRODUCED GAS STEAM GENERATOR SG-6030	801 STEAM GENERATOR FUEL GAS FROM FUEL SYSTEM	815 STEAM FROM STEAM GEN. TRAINS 1/2																						
STEAM QUALITY (%)	100%		70%																						
WATER\ STEAM (BPD)	2,100		15,000																						
GLYCOL (BPD)																									
NON-CONDEN. GAS (MMSCFD)		12.0																							
WATER SG. (W/60 F REF.)			1.003																						
GAS MW		17.4																							
PRESSURE (PSIG)	2,200	100	2,200																						
TEMPERATURE (°F)	650	80	650																						
LINE SIZE (IN)	4	10	10																						
PIPE MATERIAL/SPEC	15CS2S01	1CS2S01	15CS2S01																						

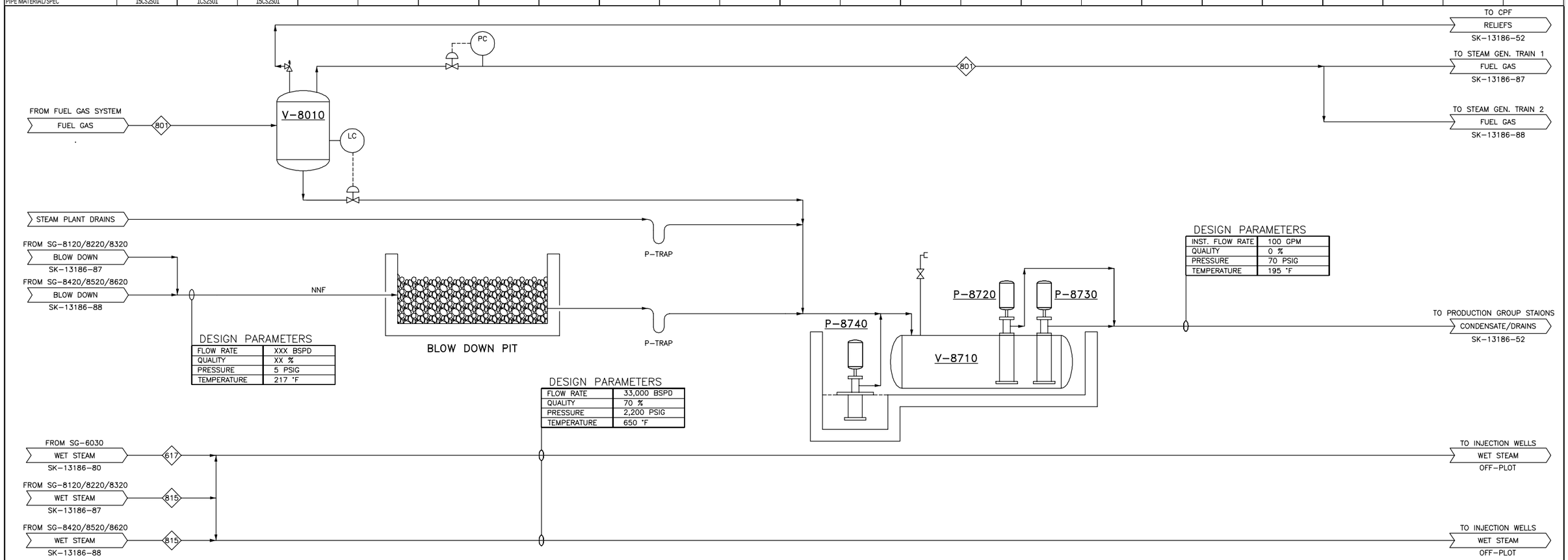

DESIGN PARAMETERS

INST. FLOW RATE	100 GPM
QUALITY	0 %
PRESSURE	70 PSIG
TEMPERATURE	195 °F

DESIGN PARAMETERS

FLOW RATE	XXX BSPD
QUALITY	XX %
PRESSURE	5 PSIG
TEMPERATURE	217 °F

DESIGN PARAMETERS

FLOW RATE	33,000 BSPD
QUALITY	70 %
PRESSURE	2,200 PSIG
TEMPERATURE	650 °F

ITEM	VESSELS		ITEM	PUMPS	
	V-8010	V-8710		P-8720/8730	P-8740
SERVICE	FUEL GAS SCRUBBER	BLOWDOWN/DRAIN TANK	SERVICE	DRAIN TANK	DRAIN TANK CONTAINMENT
DIMENSIONS	4'-0"Ø x 12'-0" S/S	6'-0"Ø x 20'-0" S/S	DESIGN CAPACITY (GPM)	100	20
OPERATING/DESIGN PRESS (PSIG)	100 / 350 - F.V.	0 / 15 - F.V.	DESIGN HEAD (PSI)	70	10
OPERATING/DESIGN TEMP (°F)	110 / 250	170-210 / 250	OPERATING/DESIGN TEMP (°F)	170-210 / 250	40-110 / 250
			NPSHA/VAPOR PRESSURE (PSIA)		
DESIGN FLOW	12 MMSCFD		HP	10	1
HOLDING CAPACITY (BBL)		100	SKID DIMENSIONS		
REMARKS					
DESIGN & FABRICATION CODE	ASME SEC. VIII	ASME SEC. VIII	DESIGN & FABRICATION CODE	API 676	API 676

NOTES:

DWG NUMBER	TITLE
SK-13186-51	TITLE SHEET/DRAWING INDEX – PROCESS

REFERENCE DRAWINGS

ISSUED FOR REVIEW
NOT FOR CONSTRUCTION

TJCROSS ENGINEERS

T.J. CROSS AUTOCAD CONTROL
SCALE: NONE
PLOT AT: 1:1
ENGINEER: WES
DATE STARTED: 11/07/13
FILE: 13186/SK1318689
LAYER(S): AERA
CHANGED BY: JJM
LAST CHANGED: 03/28/16

DATE	REV	DESCRIPTION	BY	APPR	AERA ENG
03/28/16	E2	REVISED IFR	JJM	SMH	EWP
07/18/14	E	ISSUED FOR REVIEW	OIC	SMH	EWP
06/24/14	D	REVISED PER AERA REVIEW	CJF	SMH	EWP
05/19/14	C	REVISED IRF	CJF	SMH	EWP
04/08/14	B	RE-ISSUED PER AERA COMMENTS	CJF	SMH	EWP
11/21/13	A	ISSUED FOR REVIEW	CJF	SMH	EWP

AERA

PROCESS FLOW DIAGRAM – SGS STEAM DISTRIBUTION AND BLOWDOWN
FIELD REDEVELOPMENT PROJECT
SECTION 30 T9N R32W
EAST CAT CANYON FIELD – SANTA BARBARA COUNTY – CALIFORNIA

AERA ENGINEER: ERIC PAULSON
CO. ENGINEER: TJ CROSS ENGINEERS, INC.
PROJ. MGR: ALI GOKGOZ
DESIGNED BY: TJ CROSS ENGINEERS, INC.
DRAFTED BY: OLIVIA CASTRO
ECCN NO.

DATE: 11/07/13
SCALE: NONE
ORIGINAL DWG NO.
NO. SK-13186-89
REV. E2
CAD FILE NO. SK1318689

:FUNCTIONAL LOCATION NO.

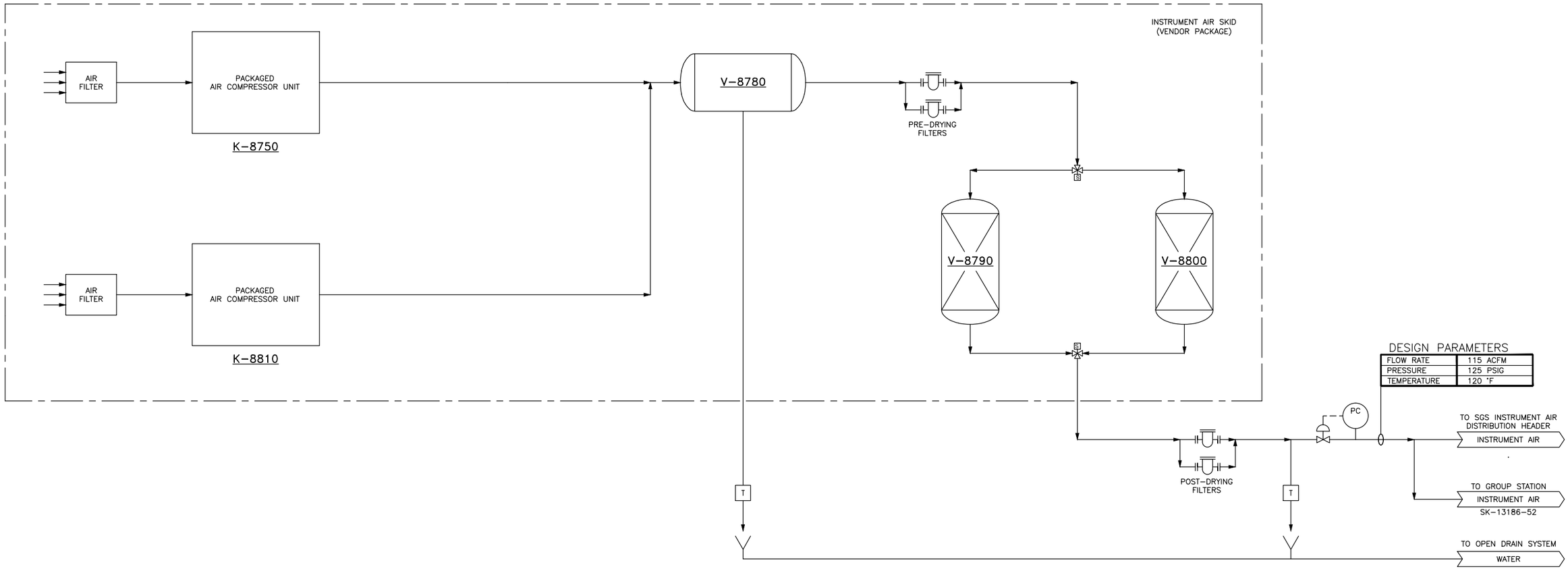

DESIGN PARAMETERS

FLOW RATE	115 ACFM
PRESSURE	125 PSIG
TEMPERATURE	120 °F

ITEM	COMPRESSORS	ITEM	VESSELS	
	K-8750/8810		V-8780	V-8790/8800
SERVICE	AIR COMPRESSOR	SERVICE	AIR RECEIVER	AIR DRYER (PSA)
DESIGN CAPACITY (ACFM)	115	DIMENSIONS	36"Ø x 80" S/S	---
DESIGN DIFF. PRESS (PSI)	125	OPERATING/DESIGN PRESS (PSIG)	125 / 200	125 / 200
TEMP. IN/OUT (°F)	80 / 100	OPERATING/DESIGN TEMP (°F)	100 / 200	100 / 200
OP. DESIGN PRESS IN (PSIA)	14.7	DESIGN FLOW-AIR (ACFM)		250
OP./DESIGN PRESS OUT (PSIG)	125	HOLDING CAPACITY (GAL)	400	---
HP	30			
		REMARKS		
DESIGN & FABRICATION CODE		DESIGN & FABRICATION CODE	ASME SEC. VIII	ASME SEC. VIII

DWG NUMBER	TITLE
SK-13186-51	TITLE SHEET/DRAWING INDEX – PROCESS

REFERENCE DRAWINGS

ISSUED FOR REVIEW
NOT FOR CONSTRUCTION

TJCROSS ENGINEERS

T.J. CROSS AUTOCAD CONTROL

SCALE: NONE
PLOT AT: 1:1
ENGINEER: WES
DATE STARTED: 10/08/13
FILE: 13186/SK1318690
LAYER(S): AERA
CHANGED BY: OIC
LAST CHANGED: 07/18/14

DATE	REV	DESCRIPTION	BY	APPR	AERA ENG
07/18/14	E	ISSUED FOR REVIEW	OIC	SMH	EWP
06/24/14	D	REVISED PER AERA REVIEW	WES	SMH	EWP
05/19/14	C	REVISED IFR	CJF	SMH	EWP
04/08/14	B	RE-ISSUED PER AERA COMMENTS	CJF	SMH	EWP
11/07/13	A	ISSUED FOR REVIEW	CJF	SMH	EWP

AERA

PROCESS FLOW DIAGRAM – SGS – INSTRUMENT AIR SYSTEM
FIELD REDEVELOPMENT PROJECT
SECTION 30 T9N R32W
EAST CAT CANYON FIELD – SANTA BARBARA COUNTY – CALIFORNIA

AERA ENGINEER: ERIC PAULSON
CO. ENGINEER: TJ CROSS ENGINEERS, INC.
PROJ. MGR: ALI GOKGOZ
DESIGNED BY: TJ CROSS ENGINEERS, INC.
DRAFTED BY: OLIVIA CASTRO
ECCN NO.

DATE: 11/21/2013
SCALE: NONE
ORIGINAL DWG NO.
NO. SK-13186-90
REV. E
CAD FILE NO. SK1318690

Stream Description / Process Parameter (OPERATING)	901 TANK VAPORS TO COS/LOS TVR COOLER	902 TANK VAPORS FROM COS/LOS TVR COOLER	903 TANK VAPORS FROM COS/LOS TVR SCRUBBER	904 CONDENSATE FROM COS/LOS TVR SCRUBBER	905 TANK VAPORS FROM TVR SKID INLET SCRUBBER	906 CONDENSATE FROM TVR SKID INLET SCRUBBER PUMP	907 TVR SKID COMPRESSOR DISCHARGE GAS TO DISCHARGE COOLER	908 COOLED TVR COMPRESSOR DISCHARGE GAS TO DISCHARGE SCRUBBER	909 COS/LOS TVR DISCHARGE GAS TO SOUR GAS SCRUBBER	910 CONDENSATE FROM TVR SKID DISCHARGE SCRUBBER	911 COS/LOS TVR CONDESATE OUT	912 TVR CONDENSATE TO SLOP OIL TANKS	926 TVR CONDENSATE FROM WATER PLANT TVR
OIL (BPD)													
WATER\ STEAM (BPD)	33	33	8	25	8		8	8	3	5	30	60	30
CONDENSIBLE H.C. (BPD)													
NON-CONDEN. GAS (MMSCFD)	0.4230	0.4230	0.4230		0.4230		0.4230	0.4230	0.4230				
WATER SG. (W/60 F REF.)	1.003	1.003		1.003	1.003	1.003	1.003	1.003		1.003	1.003	1.003	1.003
GAS MW	18.4	18.4	18.4		18.4		18.4	18.4	18.4				
PRESSURE (PSIG)	0	0	0	0	0	30	35	30	30	30	30	30	30
TEMPERATURE (°F)	164	120	120	120	120	120	307	120	120	120	120	120	120
LINE SIZE (IN)	8	6	6	1	6	1	4	4	4	1	2	2	2
PIPE MATERIAL/SPEC	1CS2S01	1CS2S01	1CS2S01	1CS2S01	1CS2S01	1CS2S01	1CS2S01	1CS2S01	1CS2S01	1CS2S01	1CS2S01	1CS2S01	1CS2S01

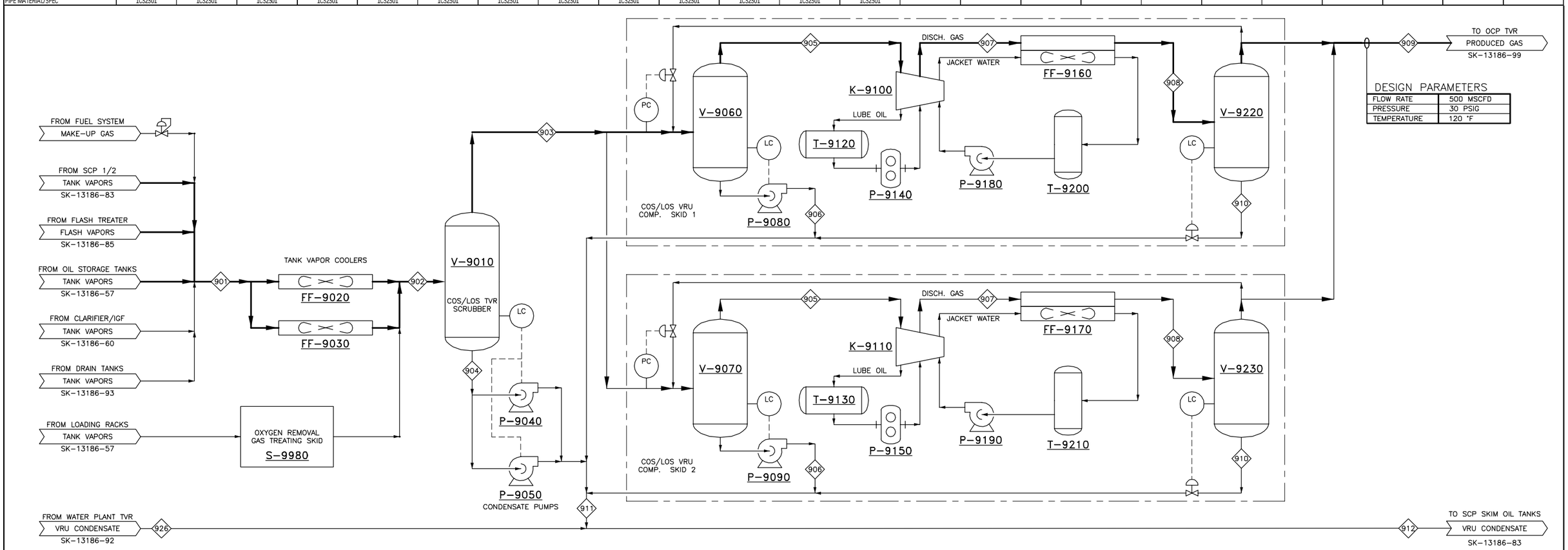

DESIGN PARAMETERS

FLOW RATE	500 MSCFD
PRESSURE	30 PSIG
TEMPERATURE	120 °F

ITEM	VESSELS			ITEM	FIN-FANS			ITEM	PUMPS				ITEM	TANKS		ITEM	COMPRESSORS	ITEM	GAS SKID
	V-9010	V-9060/9070	V-9220/9230		FF-9020/9030	FF-9160/9170			P-9040/9050	P-9080/9090	P-9140/9150	P-9180/9190		T-9120/9130	T-9200/9210		K-9100/9110		S-9980
SERVICE	COS/LOS TVR INLET SCRUBBER	TVR SKID INLET SCRUBBER	TVR SKID DISCHARGE SCRUBBER	SERVICE	COS/LOS TANK VAPOR COOLING	DISCH. GAS COOLING SECTION	JACKET WATER COOLING SECTION	SERVICE	COS/LOS PLANT TVR SCRUBBER COND. PUMP	TVR SKID SCRUBBER COND. PUMP	LUBE OIL	JACKET WATER	SERVICE	LUBE OIL	JACKET WATER	SERVICE	COS/LOS PLANT TANK VAPORS	SERVICE	OXYGEN REMOVAL
DIMENSIONS	16"Ø x 9'-0" S/S	16"Ø x 9'-0" S/S	12.75"Ø x 8'-6" S/S	DUTY (MBTU/HR)	250	200	45	DESIGN CAPACITY (GPM)	15 GPM	15 GPM		15 GPM	DIMENSIONS	BY VENDOR	BY VENDOR	OP./DESIGN CAPACITY (MSCFD)	423 / 500	OP./DESIGN CAPACITY (MSCFD)	HOLD
OPERATING/DESIGN PRESS (PSIG)	0 / 150	0 / 150	30 / 150	PROCESS DP (PSI)	0.5	1	0.5	DESIGN HEAD (PSI)	40	40	40	40	OPERATING/DESIGN PRESS (PSIG)			OP./DESIGN DIFF. PRESS (PSI)	35	OP./DESIGN DIFF. PRESS (PSI)	
OPERATING/DESIGN TEMP (°F)	120 / 350	120 / 350	120 / 350	AIRFLOW (SCFM)/TEMPIN/TEMPOUT (°F)				OPERATING/DESIGN TEMP (°F)	120 / 250	120 / 250	120 / 250	120 / 250	OPERATING/DESIGN TEMP (°F)			TEMP. IN/OUT (°F)	120	TEMP. IN/OUT (°F)	
HOLDING CAPACITY (BBL)				PROCESS TEMP IN/OUT (°F)	190 / 120	307 / 120	135 / 120	NPSHA/VAPOR PRESSURE (PSIA)					HOLDING CAPACITY (BBL)			OP./DESIGN PRESS IN (PSIA)	14.7 / 14.2		
DESIGN FLOW-LIQUID (BPD)				OPERATE/DESIGN PRESSURE (PSIG)	0 / 150	35 / 150	- / 150	BH/HP/SG	1.5	1.5	0.75	1.5				OP./DESIGN PRESS OUT (PSIG)	30 / 35		
HOLDING CAPACITY (GAL)				FAN HP / # OF FANS	5 / 1	5 / 1		SKID DIMENSIONS								HP	60		
REMARKS				DIMENSIONS															
DESIGN & FABRICATION CODE	ASME SEC. VIII	ASME SEC. VIII	ASME SEC. VIII	DESIGN & FABRICATION CODE	API 661	API 661	API 661	DESIGN & FABRICATION CODE	ANSI B73.1	ANSI B73.1	API 676	ANSI B73.1	DESIGN & FABRICATION CODE			DESIGN & FABRICATION CODE		DESIGN & FABRICATION CODE	

DWG NUMBER	TITLE
SK-13186-51	TITLE SHEET/DRAWING INDEX – PROCESS

REFERENCE DRAWINGS

ISSUED FOR REVIEW
NOT FOR CONSTRUCTION

TJCROSS ENGINEERS

T.J. CROSS AUTOCAD CONTROL
SCALE: NONE
PLOT AT: 2:1
ENGINEER: WES
DATE STARTED: 11/21/13
FILE: 13186/SK1318691
LAYER(S): AERA
CHANGED BY: AMW
LAST CHANGED: 01/28/16

DATE	REV	DESCRIPTION	BY	APPR	AERA ENG
01/20/16	E2	REVISED IFR	AMW	SMH	EWP
07/18/14	E	ISSUED FOR REVIEW	OIC	SMH	EWP
06/24/14	D	REVISED PER AERA REVIEW	WES	SMH	EWP
05/19/14	C	REVISED IFR	CJF	SMH	EWP
04/08/14	B	RE-ISSUED PER AERA COMMENTS	CJF	SMH	EWP
11/27/14	A	ISSUED FOR REVIEW	CJF	SMH	EWP

AERA

PROCESS FLOW DIAGRAM – UTILITY SYSTEMS – COS/LOS TVR
FIELD REDEVELOPMENT PROJECT
SECTION 30 T9N R32W
EAST CAT CANYON FIELD – SANTA BARBARA COUNTY – CALIFORNIA

AERA ENGINEER: ERIC PAULSON
CO. ENGINEER: TJ CROSS ENGINEERS, INC.
PROJ. MGR: ALI GOKGOZ
DESIGNED BY: TJ CROSS ENGINEERS, INC.
DRAFTED BY: OLIVIA CASTRO
ECCN NO.

DATE: 11/21/2013 SCALE: NONE
ORIGINAL DWG NO.
NO. SK-13186-91 REV. E2
CAD FILE NO. SK1318691

:FUNCTIONAL LOCATION NO.

Stream Description / Process Parameter (OPERATING)	916	917	918	919	920	921	922	923	924	925	926
	TANK VAPORS TO WSP TVR COOLER	TANK VAPORS FROM WSP TVR COOLERS	TANK VAPORS FROM WSP TVR SCRUBBER	CONDENSATE FROM WSP TVR SCRUBBER	TANK VAPORS FROM TVR SKID INLET SCRUBBER	CONDENSATE FROM TVR SKID INLET SCRUBBER PUMP	TVR SKID COMPRESSOR DISCHARGE GAS TO DISCHARGE COOLER	COOLED TVR COMPRESSOR DISCHARGE GAS TO DISCHARGE SCRUBBER	WATER PLANT TVR DISCHARGE GAS TO SOUR GAS SCRUBBER	CONDENSATE FROM TVR SKID DISCHARGE SCRUBBER	WATER PLANT TVR CONDENSATE TO SLOP OIL TANKS
OIL (BPD)											
WATER\ STEAM (BPD)	33	33	8	25	8		8	8	3	5	30
CONDENSIBLE H.C. (BPD)											
NON-CONDEN. GAS (MMSCFD)	0.4230	0.4230	0.4230		0.4230		0.4230	0.4230	0.4230		
WATER SG. (W/60 F REF.)	1.003	1.003		1.003	1.003	1.003	1.003	1.003		0.000	0.000
GAS MW	18.4	18.4	18.4		18.4		18.4	18.4	18.4		
PRESSURE (PSIG)	0	0	0	0	0	30	35	30	30	30	30
TEMPERATURE (°F)	164	120	120	120	120	120	307	120	120	120	120
LINE SIZE (IN)	8	6	6	1	6	1	4	4	4	1	2
PIPE MATERIAL/SPEC	1CS2S01	1CS2S01	1CS2S01	1CS2S01	1CS2S01	1CS2S01	1CS2S01	1CS2S01	1CS2S01	1CS2S01	1CS2S01

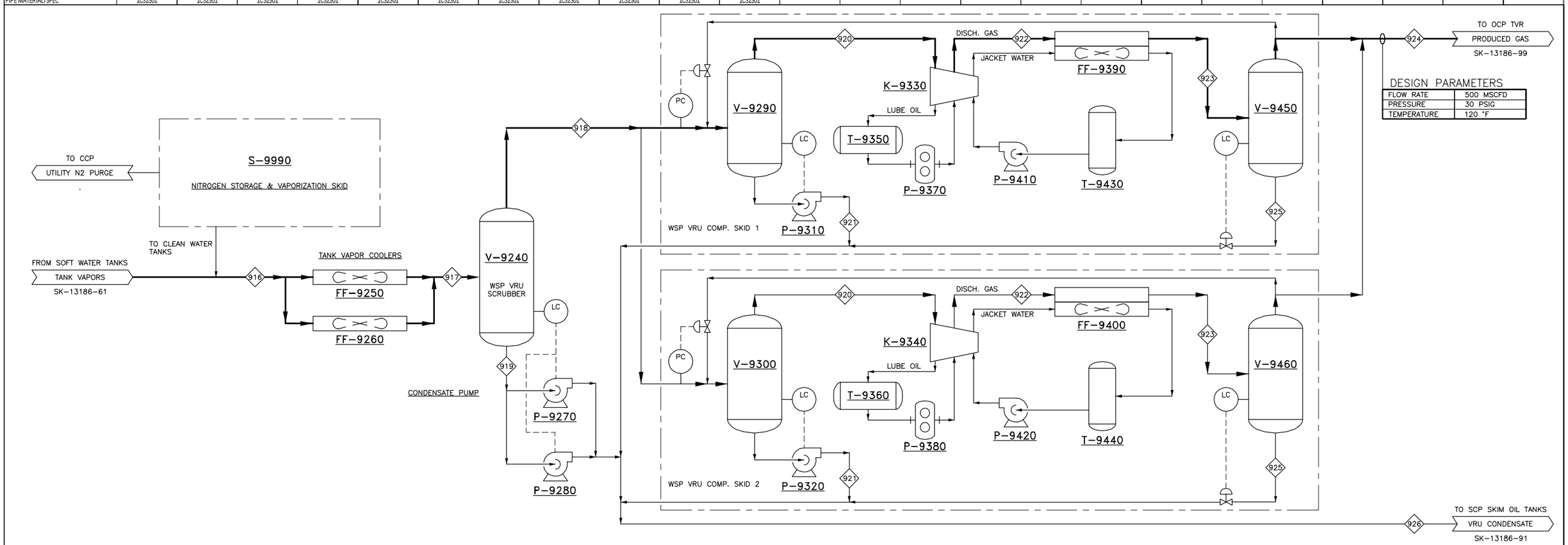

DESIGN PARAMETERS

FLOW RATE	500 MSCFD
PRESSURE	30 PSIG
TEMPERATURE	120 °F

ITEM	VESSELS			ITEM	FIN-FANS			ITEM	PUMPS				ITEM	TANKS		ITEM	COMPRESSORS	ITEM	GAS SKID
	V-9240	V-9290/9300	V-9450/9460		FF-9250/9260	FF-9390/9400			P-9270/9280	P-9310/9320	P-9370/9380	P-9410/9420		T-9350/9360	T-9430/9440		K-9330/9340		S-9990
SERVICE	WATER PLANT TVR INLET SCRUBBER	TVR SKID INLET SCRUBBER	TVR SKID DISCHARGE SCRUBBER	SERVICE	WP TANK VAPOR COOLING	DISCH. GAS COOLING SECTION	JACKET WATER COOLING SECTION	SERVICE	WATER PLANT TVR SCRUBBER COND. PUMP	TVR SKID SCRUBBER COND. PUMP	LUBE OIL	JACKET WATER	SERVICE	LUBE OIL	JACKET WATER	SERVICE	WATER PLANT TANK VAPORS	SERVICE	NITROGEN VAPORIZOR AND STORAGE
DIMENSIONS	16"Ø x 9'-0" S/S	16"Ø x 9'-0" S/S	12.75"Ø x 8'-6" S/S	DUTY (MBTU/HR)	250	200	45	DESIGN CAPACITY (GPM/BPD)	15 GPM	15 GPM		15 GPM	DIMENSIONS	BY VENDOR	BY VENDOR	OP./DESIGN CAPACITY (MSCFD)	423 / 500	OP./DESIGN CAPACITY (MSCFD)	HOLD
OPERATING/DESIGN PRESS (PSIG)	0 / 150	0 / 150	30 / 150	PROCESS DP (PSI)	0.5	1	0.5	DESIGN HEAD (PSI)	40	40	40	40	OPERATING/DESIGN PRESS (PSIG)			OP./DESIGN DIFF. PRESS (PSI)	35	OP./DESIGN DIFF. PRESS (PSI)	
OPERATING/DESIGN TEMP (°F)	120 / 350	120 / 350	120 / 350	AIRFLOW (SCFM)/TEMPIN/TEMPOUT (°F)				OPERATING/DESIGN TEMP (°F)	120 / 250	120 / 250	120 / 250	120 / 250	OPERATING/DESIGN TEMP (°F)			TEMP. IN/OUT (°F)	120	TEMP. IN/OUT (°F)	
HOLDING CAPACITY (BBL)				PROCESS TEMP IN/OUT (°F)	190 / 120	307 / 120	135 / 120	NPSHA/VAPOR PRESSURE (PSIA)					HOLDING CAPACITY (BBL)			OP./DESIGN PRESS IN (PSIA)	14.7 / 14.2	OP./DESIGN PRESS IN (PSIA)	
DESIGN FLOW-LIQUID (BPD)				OPERATE/DESIGN PRESSURE (PSIG)	0 / 150	35 / 150	- / 150	BH/HP/SG	1.5	1.5	0.75	1.5				OP./DESIGN PRESS OUT (PSIG)	30 / 35	OP./DESIGN PRESS OUT (PSIG)	
HOLDING CAPACITY (GAL)				FAN HP / # OF FANS	5 / 1	5 / 1		SKID DIMENSIONS								HP	60	HP	
REMARKS				DIMENSIONS															
DESIGN & FABRICATION CODE	ASME SEC. VIII	ASME SEC. VIII	ASME SEC. VIII	DESIGN & FABRICATION CODE	API 661	API 661	API 661	DESIGN & FABRICATION CODE	ANSI B73.1	ANSI B73.1		ANSI B73.1	DESIGN & FABRICATION CODE			DESIGN & FABRICATION CODE		DESIGN & FABRICATION CODE	

DWG NUMBER	TITLE
SK-13186-51	TITLE SHEET/DRAWING INDEX – PROCESS

REFERENCE DRAWINGS

ISSUED FOR REVIEW
NOT FOR CONSTRUCTION

TJCROSS ENGINEERS

T.J. CROSS AUTOCAD CONTROL
SCALE: NONE
PLOT AT: 2:1
ENGINEER: WES
DATE STARTED: 11/21/13
FILE: 13186/SK1318692
LAYER(S): AERA
CHANGED BY: AMW
LAST CHANGED: 01/20/16

DATE	REV	DESCRIPTION	BY	APPR	AERA ENG
01/20/16	E2	REVISED IFR	AMW	SMH	EWP
07/18/14	E	ISSUED FOR REVIEW	OIC	SMH	EWP
06/24/14	D	REVISED PER AERA REVIEW	CJF	SMH	EWP
05/19/14	C	REVISED IFR	CJF	SMH	EWP
04/08/14	B	RE-ISSUED PER AERA COMMENTS	CJF	SMH	EWP
11/27/13	A	ISSUED FOR REVIEW	CJF	SMH	EWP

AERA

PROCESS FLOW DIAGRAM – UTILITY SYSTEMS – WSP TVR
FIELD REDEVELOPMENT PROJECT
SECTION 30 T9N R32W
EAST CAT CANYON FIELD – SANTA BARBARA COUNTY – CALIFORNIA

AERA ENGINEER: ERIC PAULSON
CO. ENGINEER: TJ CROSS ENGINEERS, INC.
PROJ. MGR: ALI GOKGOZ
DESIGNED BY: TJ CROSS ENGINEERS, INC.
DRAFTED BY: OLIVIA CASTRO
ECCN NO.
DATE: 11/21/2013
SCALE: NONE
ORIGINAL DWG NO.
NO. SK-13186-92
REV. E2
CAD FILE NO. SK1318692

:FUNCTIONAL LOCATION NO.

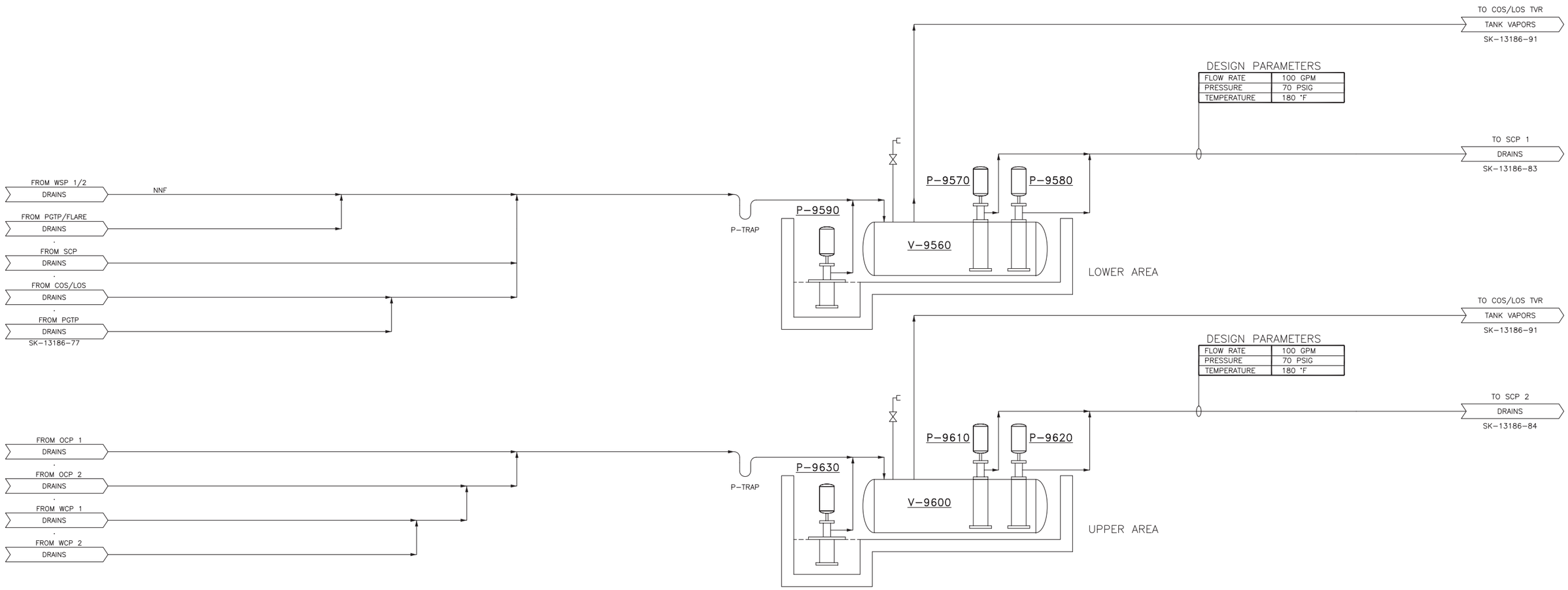

ITEM	TANK	ITEM	PUMPS	
	V-9560/9600		P-9570/9580/9610/9620	P-9590/9630
SERVICE	DRAIN TANK	SERVICE	DRAIN TANK LIQUIDS	DRAIN TANK CONTAINMENT
DIMENSIONS	6'-0"Ø x 20'-0" S/S	DESIGN CAPACITY (GPM)	100	20
OPERATE/DESIGN PRESSURE (OSIG)	0 / 15 - F.V.	DESIGN HEAD (PSI)	70	10
OPERATE/DESIGN TEMPERATURE (F)	170-210 / 250	OPERATING/DESIGN TEMP (°F)	170-210 / 250	40-110 / 250
HOLDING CAPACITY (BBL)	100	NPSHA/VAPOR PRESSURE (PSIA)		
		HP	10	1
		SKID DIMENSIONS		
DESIGN & FABRICATION CODE	ASME SEC. VIII	DESIGN & FABRICATION CODE	API 676	API 676

DWG NUMBER	TITLE
SK-13186-51	TITLE SHEET/DRAWING INDEX – PROCESS

REFERENCE DRAWINGS

ISSUED FOR REVIEW
NOT FOR CONSTRUCTION

TJCROSS ENGINEERS

T.J. CROSS AUTOCAD CONTROL
SCALE: NONE
PLOT AT: 2:1
ENGINEER: WES
DATE STARTED: 11/21/13
FILE: 13186/SK1318693
LAYER(S): AERA
CHANGED BY: AMW
LAST CHANGED: 01/28/16

DATE	REV	DESCRIPTION	BY	APPR	AERA ENG
01/20/16	E2	REVISED IFR	AMW	SMH	EWP
07/18/14	E	ISSUED FOR REVIEW	OIC	SMH	EWP
06/24/14	D	REVISED PER AERA REVIEW	CJF	SMH	EWP
05/19/14	C	REVISED IFR	CJF	SMH	EWP
04/08/14	B	RE-ISSUED PER AERA COMMENTS	CJF	SMH	EWP
11/27/13	A	ISSUED FOR REVIEW	CJF	SMH	EWP

AERA

PROCESS FLOW DIAGRAM – UTILITY SYSTEMS – CPP DRAIN SYSTEM
FIELD REDEVELOPMENT PROJECT
SECTION 30 T9N R32W
EAST CAT CANYON FIELD – SANTA BARBARA COUNTY – CALIFORNIA

AERA ENGINEER: ERIC PAULSON
CO. ENGINEER: TJ CROSS ENGINEERS, INC.
PROJ. MGR: ALI GOKGOZ
DESIGNED BY: TJ CROSS ENGINEERS, INC.
DRAFTED BY: OLIVIA CASTRO
ECCN NO.

DATE: 11/21/2013
SCALE: NONE
ORIGINAL DWG NO.
NO. SK-13186-93
REV. E2
CAD FILE NO. SK1318693

:FUNCTIONAL LOCATION NO.

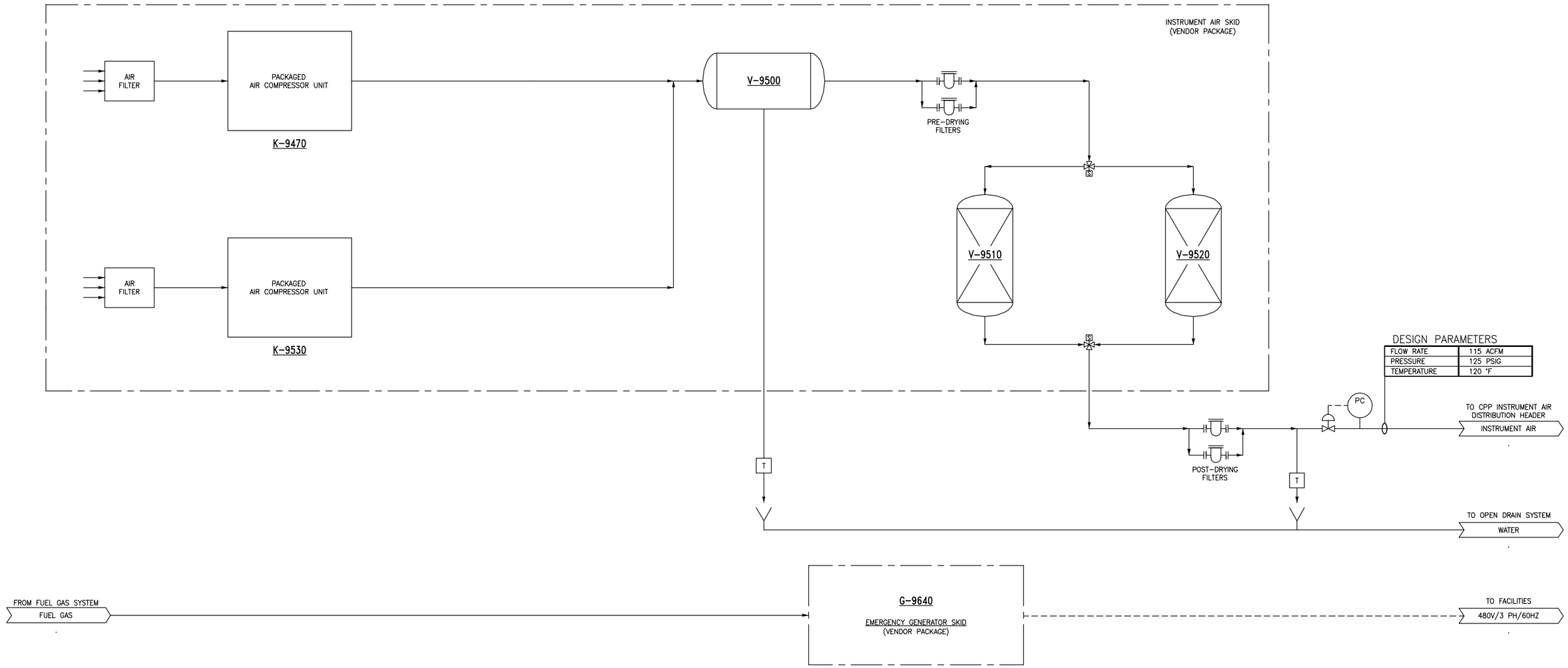

DESIGN PARAMETERS

FLOW RATE	115 ACFM
PRESSURE	125 PSIG
TEMPERATURE	120 °F

ITEM	COMPRESSORS	ITEM	VESSELS		ITEM	GENERATOR
	K-9470/9530		V-9500	V-9510/9520		G-9640
SERVICE	AIR COMPRESSOR	SERVICE	AIR RECEIVER	AIR DRYER (PSA)	SERVICE	EMERGENCY GENERATOR
OP./DESIGN CAPACITY (ACFM)	115	DIMENSIONS	36"Ø x 80" S/S	---	DUTY	801 kW
OP./DESIGN DIFF. PRESS (PSI)	125	OPERATING/DESIGN PRESS (PSIG)	125 / 200	125 / 200	SPEED	1,800 RPM
TEMP. IN/OUT (°F)	80 / 100	OPERATING/DESIGN TEMP (°F)	100 / 200	100 / 200	EFFICIENCY	
OP./DESIGN PRESS IN (PSIA)	14.7	DESIGN FLOW-AIR (ACFM)		250	VOLTS / PH / HZ	480 / 3 / 60
OP./DESIGN PRESS OUT (PSIG)	125	HOLDING CAPACITY (GAL)	400	---	FUEL GAS USAGE (BTU/bHP-hr.)	7,600
HP	30					
		REMARKS				
DESIGN & FABRICATION CODE		DESIGN & FABRICATION CODE	ASME SEC. VIII	ASME SEC. VIII		

SK-13186-51	TITLE SHEET/DRAWING INDEX – PROCESS
DWG NUMBER	TITLE

REFERENCE DRAWINGS

ISSUED FOR REVIEW
NOT FOR CONSTRUCTION

TJ CROSS ENGINEERS

T.J. CROSS AUTOCAD CONTROL
SCALE: 13186/SK1318695
PLOT AT: 1:1
ENGINEER: WES
DATE STARTED: 11/21/13
FILE: 13186/SK1318694
LAYER(S): AERA
CHANGED BY: AMW
LAST CHANGED: 01/20/16

DATE	REV	DESCRIPTION	BY	APPR	AERA ENG
01/20/16	E2	REVISED IFR	AMW	SMH	EWP
07/18/14	E	ISSUED FOR REVIEW	OIC	SMH	EWP
06/24/14	D	REVISED PER AERA REVIEW	WES	SMH	EWP
05/19/14	C	REVISED IFR	CJF	SMH	EWP
04/08/14	B	RE-ISSUED PER AERA COMMENTS	CJF	SMH	EWP
11/27/13	A	ISSUED FOR REVIEW	CJF	SMH	EWP

AERA

PROCESS FLOW DIAGRAM – UTILITY SYSTEMS – NORTH CPP INSTRUMENT AIR SYSTEM
FIELD REDEVELOPMENT PROJECT
SECTION 30 T9N R32W
EAST CAT CANYON FIELD – SANTA BARBARA COUNTY – CALIFORNIA

AERA ENGINEER: ERIC PAULSON
CO. ENGINEER: TJ CROSS ENGINEERS, INC.
PROJ. MGR: ALI GOKGOZ
DESIGNED BY: TJ CROSS ENGINEERS, INC.
DRAFTED BY: OLIVIA CASTRO
ECCN NO.

DATE: 11/21/13
SCALE: NONE
ORIGINAL DWG NO.
NO. SK-13186-94
REV. E2
CAD FILE NO. SK1318694

:FUNCTIONAL LOCATION NO.

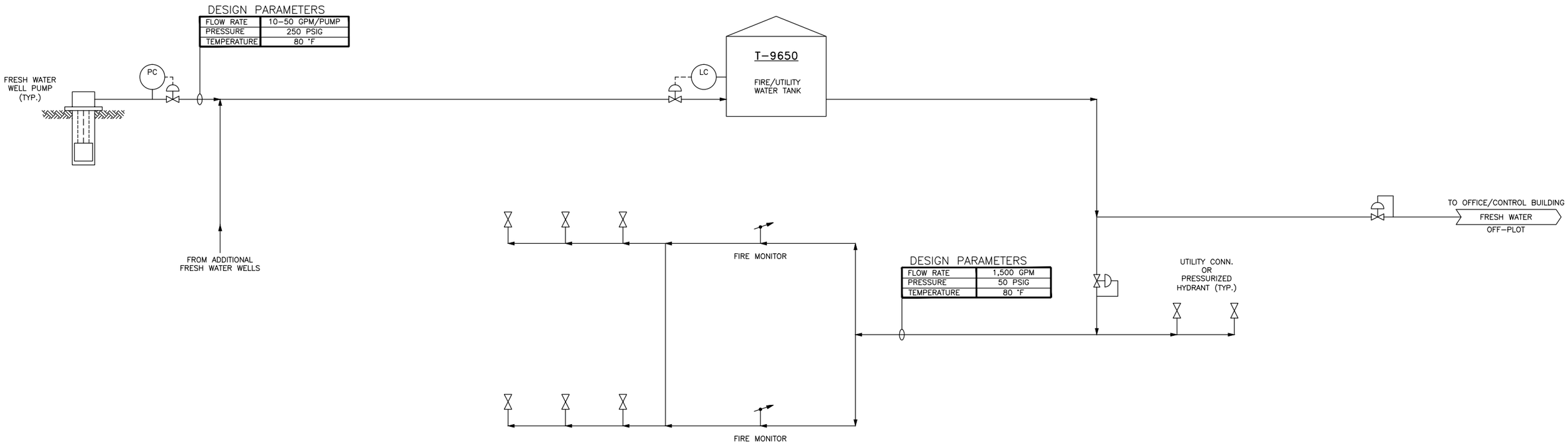

ITEM	TANK T-9650	ITEM	PUMPS
SERVICE	FIRE/UTILITY WATER STORAGE	SERVICE	FRESH WATER WELL SUBMERSIBLE PUMP
DIMENSIONS	29'-9"Ø x 24'-0"	DESIGN CAPACITY (GPM)	50
OPERATE/DESIGN PRESSURE (OSIG)	-0.5 / 2.0	DESIGN HEAD (PSI)	
OPERATE/DESIGN TEMPERATURE (F)	120 / 210	OPERATING/DESIGN TEMP (°F)	80 / 250
HOLDING CAPACITY (BBL)	3,000	NPSHA/VAPOR PRESSURE (PSIA)	
		HP	20
		SKID DIMENSIONS	
REMARKS	GALVANIZED		
DESIGN & FABRICATION CODE	API 12B	DESIGN & FABRICATION CODE	

DWG NUMBER	TITLE
SK–13186–51	TITLE SHEET/DRAWING INDEX – PROCESS

REFERENCE DRAWINGS

ISSUED FOR REVIEW
NOT FOR CONSTRUCTION

TJCROSS ENGINEERS

T.J. CROSS AUTOCAD CONTROL
SCALE: NONE
PLOT AT: 2:1
ENGINEER: WES
DATE STARTED: 11/21/2013
FILE: 13186/SK1318695
LAYER(S): AERA
CHANGED BY: OIC
LAST CHANGED: 07/18/14

DATE	REV	DESCRIPTION	BY	APPR	AERA ENG
07/18/14	E	ISSUED FOR REVIEW	OIC	SMH	EWP
06/24/14	D	REVISED PER AERA REVIEW	CJF	SMH	EWP
05/19/14	C	REVISED IFR	CJF	SMH	EWP
04/08/14	B	RE–ISSUED PER AERA COMMENTS	CJF	SMH	EWP
11/27/14	A	ISSUED FOR REVIEW	CJF	SMH	EWP

AERA

PROCESS FLOW DIAGRAM – UTILITY SYSTEMS – FIRE & UTILITY WATER
FIELD REDEVELOPMENT PROJECT
SECTION 30 T9N R32W
EAST CAT CANYON FIELD – SANTA BARBARA COUNTY – CALIFORNIA

AERA ENGINEER: ERIC PAULSON
CO. ENGINEER: TJ CROSS ENGINEERS, INC.
PROJ. MGR: ALI GOKGOZ
DESIGNED BY: TJ CROSS ENGINEERS, INC.
DRAFTED BY: OLIVIA CASTRO
ECCN NO.

DATE: 11/21/2013
SCALE: NONE
ORIGINAL DWG NO.
NO. SK–13186–95
REV. E
CAD FILE NO. SK1318695

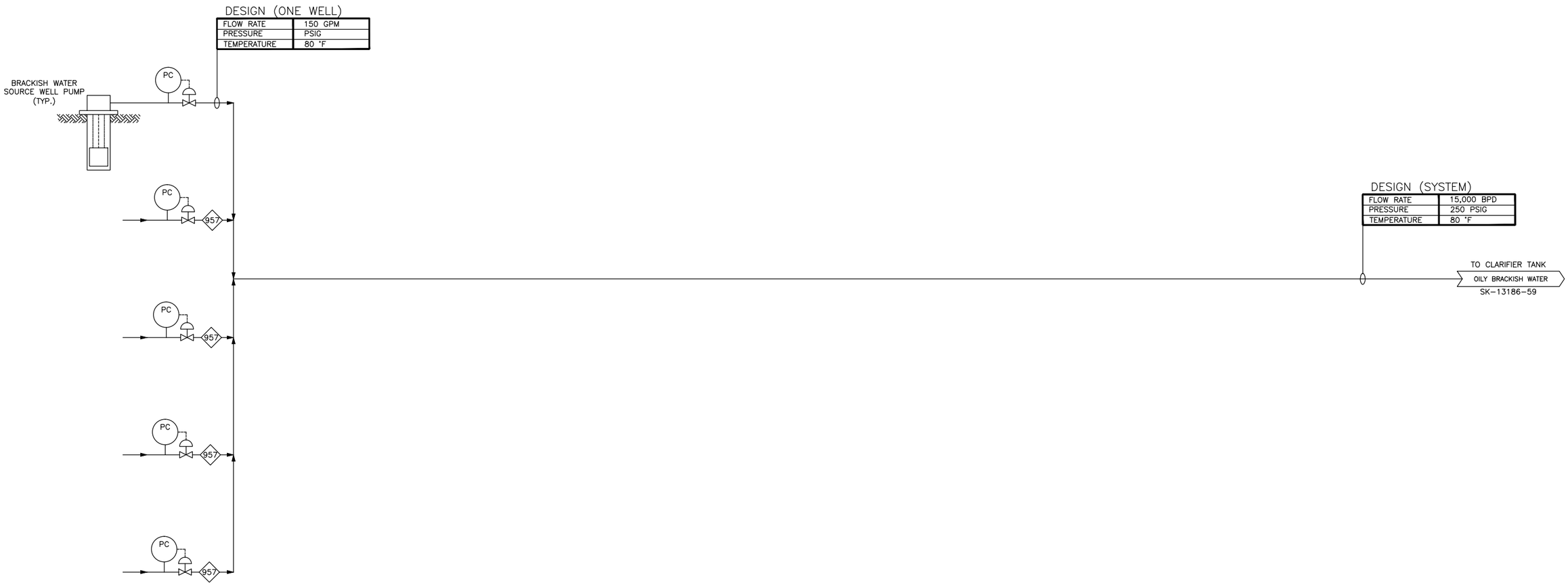

ITEM	PUMPS
SERVICE	BRACKISH SOURCE WATER WELL SUBMERSIBLE PUMP
DESIGN CAPACITY (GPM)	150
DESIGN HEAD (PSI)	
OPERATING/DESIGN TEMP (°F)	80 / 250
NPSHA/VAPOR PRESSURE (PSIA)	
HP	60
SKID DIMENSIONS	
DESIGN & FABRICATION CODE	

DWG NUMBER	TITLE
SK-13186-51	TITLE SHEET/DRAWING INDEX – PROCESS

REFERENCE DRAWINGS

ISSUED FOR REVIEW
NOT FOR CONSTRUCTION

TJCROSS ENGINEERS

T.J. CROSS AUTOCAD CONTROL
SCALE: NONE
PLOT AT: 1:1
ENGINEER: WES
DATE STARTED: 11/21/13
FILE: 13186/SK1318696
LAYER(S): AERA
CHANGED BY: OIC
LAST CHANGED: 07/18/14

DATE	REV	DESCRIPTION	BY	APPR	AERA ENG
07/18/14	E	ISSUED FOR REVIEW	OIC	SMH	EWP
06/24/14	D	REVISED PER AERA REVIEW	CJF	SMH	EWP
05/19/14	C	REVISED IFR	CJF	SMH	EWP
04/08/14	B	REVISED PER AERA COMMENTS	CJF	SMH	EWP
11/27/13	A	ISSUED FOR REVIEW	CJF	SMH	EWP

AERA

PROCESS FLOW DIAGRAM – UTILITY SYSTEMS – SISQUOC PRODUCTION GATHERING
FIELD REDEVELOPMENT PROJECT
SECTION 30 T9N R32W
EAST CAT CANYON FIELD – SANTA BARBARA COUNTY – CALIFORNIA

AERA ENGINEER: ERIC PAULSON
CO. ENGINEER: TJ CROSS ENGINEERS, INC.
PROJ. MGR: ALI GOKGOZ
DESIGNED BY: TJ CROSS ENGINEERS, INC.
DRAFTED BY: OLIVIA CASTRO
ECCN NO.

DATE: 11/21/2013
SCALE: NONE
ORIGINAL DWG NO.
NO. SK-13186-96
REV. E
CAD FILE NO. SK1318696

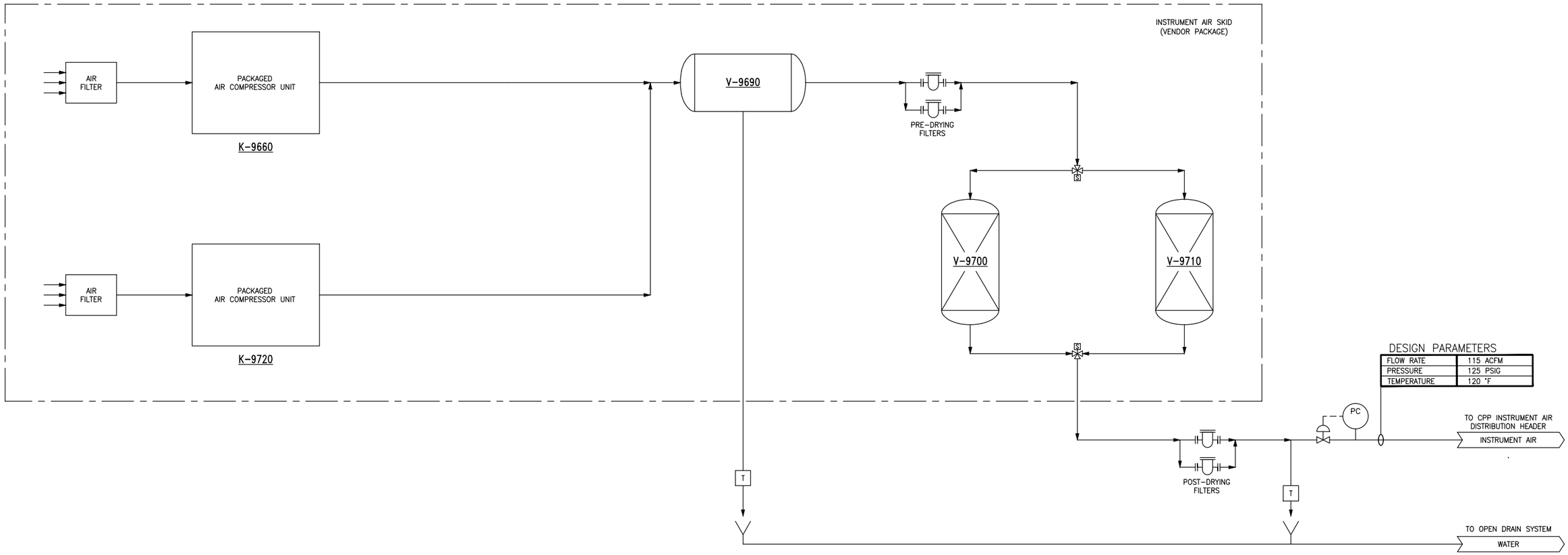

DESIGN PARAMETERS

FLOW RATE	115 ACFM
PRESSURE	125 PSIG
TEMPERATURE	120 °F

ITEM	COMPRESSORS	ITEM	VESSELS	
	K-9660/9720		V-9690	V-9700/9710
SERVICE	AIR COMPRESSOR	SERVICE	AIR RECEIVER	AIR DRYER (PSA)
OP./DESIGN CAPACITY (ACFM)	115	DIMENSIONS	36"ø x 80" S/S	---
OP./DESIGN DIFF. PRESS (PSI)	125	OPERATING/DESIGN PRESS (PSIG)	125 / 200	125 / 200
TEMP. IN/OUT (°F)	80 / 100	OPERATING/DESIGN TEMP (°F)	100 / 200	100 / 200
OP./DESIGN PRESS IN (PSIA)	14.7	HOLDING CAPACITY (BBL)		250
OP./DESIGN PRESS OUT (PSIG)	125	DESIGN FLOW-LIQUID (BPD)	400	---
HP	30	HOLDING CAPACITY (GAL)		
		REMARKS		
DESIGN & FABRICATION CODE		DESIGN & FABRICATION CODE	ASME SEC. VIII	ASME SEC. VIII

SK-13186-51	TITLE SHEET/DRAWING INDEX - PROCESS
DWG NUMBER	TITLE

REFERENCE DRAWINGS

ISSUED FOR REVIEW
NOT FOR CONSTRUCTION

TJCROSS ENGINEERS

T.J. CROSS AUTOCAD CONTROL

SCALE: 13186/SK1318695
PLOT AT: 1:1
ENGINEER: WES
DATE STARTED: 11/21/13
FILE: 13186/SK1318698
LAYER(S): AERA
CHANGED BY: OIC
LAST CHANGED: 07/18/14

DATE	REV	DESCRIPTION	BY	APPR	AERA ENG
07/18/14	E	ISSUED FOR REVIEW	OIC	SMH	EWP
06/24/14	D	REVISED PER AERA REVIEW	WES	SMH	EWP
05/19/14	C	REVISED IFR	CJF	SMH	EWP
04/08/14	B	RE-ISSUED PER AERA COMMENTS	CJF	SMH	EWP
11/27/13	A	ISSUED FOR REVIEW	CJF	SMH	EWP

AERA

PROCESS FLOW DIAGRAM - UTILITY SYSTEMS - SOUTH CPP INSTRUMENT AIR SYSTEM
FIELD REDEVELOPMENT PROJECT
SECTION 30 T9N R32W
EAST CAT CANYON FIELD - SANTA BARBARA COUNTY - CALIFORNIA

AERA ENGINEER: ERIC PAULSON	DATE: 11/21/13	SCALE: NONE	
CO. ENGINEER: TJ CROSS ENGINEERS, INC.	ORIGINAL DWG NO.		
PROJ. MGR: ALI GOKGOZ	NO. SK-13186-98		REV. E
DESIGNED BY: TJ CROSS ENGINEERS, INC.			
DRAFTED BY: OLIVIA CASTRO			
ECCN NO.	CAD FILE NO. SK1318698		

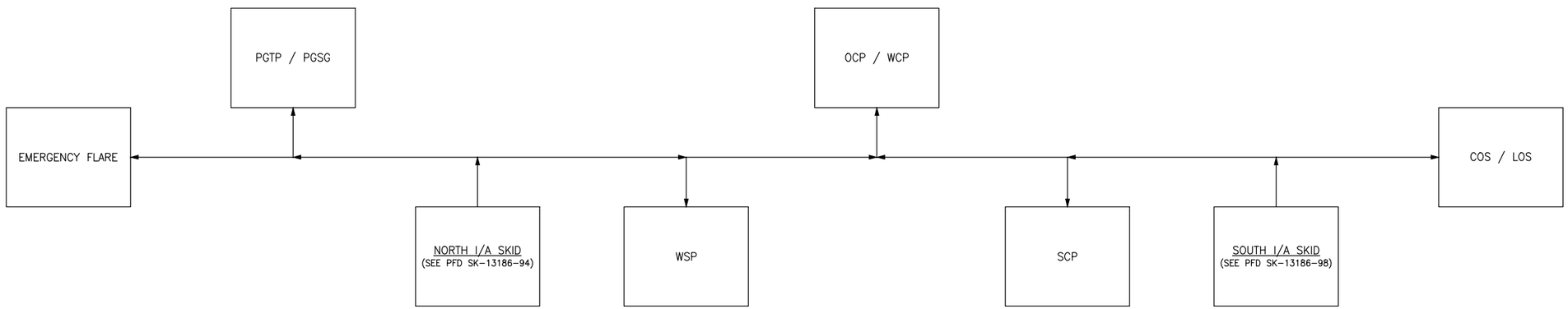

DWG NUMBER	TITLE
SK-13186-51	TITLE SHEET/DRAWING INDEX - PROCESS

REFERENCE DRAWINGS

ISSUED FOR REVIEW
NOT FOR CONSTRUCTION

TJCROSS ENGINEERS

T.J. CROSS AUTOCAD CONTROL
SCALE: 13186/SK1318695
FILE: 13186/SK13186129
PLOT AT: 1:1
LAYER(S): AERA
ENGINEER: WES
CHANGED BY: OIC
DATE STARTED: 11/21/13
LAST CHANGED: 07/18/14

DATE	REV	DESCRIPTION	BY	APPR	AERA ENG
07/18/14	E	ISSUED FOR REVIEW	OIC	SMH	EWP
06/24/14	D	REVISED PER AERA REVIEW	WES	SMH	EWP
05/19/14	C	REVISED IFR	CJF	SMH	EWP
04/08/14	B	RE-ISSUED PER AERA COMMENTS	CJF	SMH	EWP
11/27/13	A	ISSUED FOR REVIEW	CJF	SMH	EWP

AERA

PROCESS FLOW DIAGRAM - UTILITY SYSTEMS - INSTRUMENT/ UTILITY AIR SYSTEM
FIELD REDEVELOPMENT PROJECT
SECTION 30 T9N R32W
EAST CAT CANYON FIELD - SANTA BARBARA COUNTY - CALIFORNIA

AERA ENGINEER: ERIC PAULSON
DATE: 11/21/13
SCALE: NONE
CO. ENGINEER: TJ CROSS ENGINEERS, INC.
ORIGINAL DWG NO.
PROJ. MGR: ALI GOKGOZ
DESIGNED BY: TJ CROSS ENGINEERS, INC.
DRAFTED BY: OLIVIA CASTRO
ECCN NO.
NO. SK-13186-129
REV. E
CAD FILE NO. SK13186129