Air Quality Impact Analysis

East Cat Canyon
Oil Field Redevelopment Project
County of Santa Barbara

Prepared for:

Aera Energy LLC
10000 Ming Avenue
Bakersfield, CA 93309

Prepared by:

Insight Environmental Consultants
A Trinity Consultants Company

5500 Ming Avenue, Suite 140
Bakersfield, California 93309
661-282-2200

February 2015
(Revised August 2015)
(Revised March 2016)

Table of Contents

EXECUTIVE SUMMARY……vii

1.0 INTRODUCTION..... 1

2.0 GENERAL PROJECT DESCRIPTION 1

3.0 SANTA BARBARA COUNTY ENVIRONMENTAL THRESHOLDS..... 4

4.0 REGULATORY AND ENVIRONMENTAL SETTING..... 7

5.0 PROJECT-IMPACT ANALYSIS FOR CRITERIA POLLUTANTS..... 25

6.0 CUMULATIVE IMPACTS 60

7.0 IMPACTS TO GLOBAL CLIMATE CHANGE 69

8.0 CONSISTENCY WITH THE SANTA BARBARA COUNTY AIR POLLUTION CONTROL DISTRICT CLEAN AIR PLAN..... 70

9.0 MITIGATION MEASURES AND RESIDUAL IMPACTS..... 74

10.0 REFERENCES..... 77

List of Figures

Figure 2-1 - Project and Regional Location....3
Figure 2-2 - Project Site Aerial....4
Figure 4-1 - 2007 Unincorporated Santa Barbara County Greenhouse Gas Emissions by Sector....23
Figure 5-1 - Potential Sensitive Receptor Locations....46
Figure 8-1 - 2013 Clean Air Plan Summary....72

List of Tables

Table 4-1 - Federal and California Standards and Santa Barbara County Attainment Status....11
Table 4-2 - 2013 Climatic Data for the Project Area....15
Table 4-3 - Existing Air Quality Monitoring Data in Project Area....16
Table 4-4 - Global Warming Potential of Various Gases....22
Table 4-5 - 2012 Emission Inventory for Santa Barbara County....24
Table 5-1 - Grading Area and Cut and Fill Volumes by Year....26
Table 5-2 - Construction Vehicles Travel Distance by Year....26
Table 5-3 - Drilling Vehicles Travel Distance by Year....27
Table 5-4 - Project Short Term Unmitigated Construction Emissions – By Year....29
Table 5-5 - 14-Mile Fuel Line Unmitigated Construction Emissions – By Year....30
Table 5-6 - 115KV Interconnect and Substation Unmitigated Construction Emissions – By Year....30
Table 5-7 - Drilling Short Term Unmitigated Construction Emissions – By Year....30
Table 5-8 - Short Term Unmitigated Construction Emissions – Peak Year....31
Table 5-9 - Project Short Term Mitigated Construction Emissions – By Year....32
Table 5-10 - 14-Mile Fuel Line Mitigated Construction Emissions – By Year....33
Table 5-11 - 115KV Interconnect and Substation Mitigated Construction Emissions – By Year....33
Table 5-12 - Drilling Short Term Mitigated Construction Emissions – By Year....33
Table 5-13 - Short Term Mitigated Construction – Peak Year....34
Table 5-14 - 85 Million British Thermal Units Per Hour Steam Generator Emission Factors....38
Table 5-15 - 62.5 Million British Thermal Units Per Hour Steam Generator Emission Factors....39
Table 5-16 - 40 Million British Thermal Units Per Hour Flare Emission Factors....40
Table 5-17 - Internal Combustion Engine Emission Factors....40
Table 5-18 - Facility Component Counts....43
Table 5-19 - Long Term Unmitigated Operational Emissions – Peak Year....43
Table 5-20 - Long Term Operational Emissions after Mitigation – Peak Year....44
Table 5-21 - Operating Schedule for Flare and Emergency Generator....48
Table 5-22 - Required Cancer Risk Scenarios....52
Table 5-23 - Summary of Maximum Cancer Health Risk Impacts....53
Table 5- 24 - Summary of Maximum Chronic Non-Cancer Health Risk Impacts....53
Table 5- 25 - Summary of Maximum Acute Non-Cancer Health Risk Impacts....53
Table 5-26 - Summary of Maximum 8-Hour Chronic Non-Cancer Health Risk Impacts....54
Table 5-27 - Risk Drivers....55
Table 5-28 - Operating Schedule for Flare and Emergency Generator....56
Table 5-29 - Project Impacts on Class I Area Vs. Maximum Allowable Increase....58
Table 5-30 - Cumulative Impacts Vs. Ambient Air Quality Standards....59
Table 5-31 - Comparison of Maximum Modeled Project Impact with Significance Thresholds....60
Table 6-1 - Project Emissions Relative to 2012 Emission Inventory for South Central Coast Air Basin....60
Table 6-2 - Emission Inventory South Central Coast Air Basin 2020 Projection – Tons per Year....61
Table 6-3 - Emission Inventory South Central Coast Air Basin – Santa Barbara County Portion 2020 Projection – Tons per Year....61
Table 6-4 - 2020 Emissions Projections – Proposed Project and Santa Barbara County Air Pollution Control District – Tons per Year....62

Table 6-5 - Cumulative Oil and Gas Projects in the Project Vicinity 62
Table 6-6 - Cumulative Land Development Projects in North Santa Barbara County 64
Table 7-1 - Estimated Annual Mitigated Greenhouse Gas Emissions for Peak Year 2024 (Metric Tons/Year) 69
Table 8-1 - Evaluation of Project Consistency with 2013 Clean Air Plan 73

List of Attachments

A. Emissions Calculations and Support Documents
- Equipment Listings and Schedules
  - Construction Equipment Listing and Schedule
  - Drilling and Well Hookup Equipment Listing and Schedule
  - Construction Equipment Horsepower
- Construction Emissions
  - Construction Equipment Emission
  - Construction Vehicle Travel Emission
  - Construction Fugitive Dust Emission
  - Construction Off-Site Emission
- Drilling Emissions
  - Drilling Equipment Emission
  - Drilling Fugitive Emission
- Non-Stationary Source Operational Emissions
  - Trip Generation Day to Day Operations
  - Tanker Trips and Mileage
  - Operating Mobile Emissions Excluding Tankers
  - Operating Tankers Emissions
  - Operational Fugitive Dust Emissions
- Stationary Source Operational Emissions
  - Stationary Source Emissions Summary
  - Emergency Generator Emissions
  - Flare Emissions
  - Equipment Component Leaks Fugitive Emissions
  - Equipment Component Counts
  - Truck Loading Rack Emissions
  - Steam Generators Emissions
  - Storage Tanks Emissions
- Electrical Generation Greenhouse Gas Emissions
  - Operating Indirect Electrical Generation Emissions
- Emission Summaries
  - Construction Emissions Summaries
  - Operational Emissions Summaries

B. California Emissions Estimator Model v.2013.2.2 Output Files

C. Health Risk Assessment
- HRA Sources
  - Table C-1: HRA Emission Sources Max Hour Emissions
  - Table C-2: HRA Emission Sources Annual Emissions
  - Table C-3: Project Sources' Locations and Parameters
- Toxic Emission Calculations

- Table C-4: Toxic Emissions – Steam Generators
- Table C-5: Toxic Emissions – Flare
- Table C-6: Toxic Emission Factors for Tanks, Fugitive Components, and Loading Rack
- Table C-7: H2S Emission Factors for Tanks, Fugitive Components, and Loading Rack
- Table C-8: Air Toxic Emissions for Fugitive Gas Service Components with High H2S Concentration
- Table C-9: Air Toxic Emissions for Fugitive Gas Service Components with Low H2S Concentration
- Table C-10: Air Toxic Emissions for Fugitive Oil Service Components with High H2S Concentration
- Table C-11: Air Toxic Emissions for Fugitive Oil Service Components with Low H2S Concentration
- Table C-12: Air Toxic Emissions for Tanks and Loading Rack
- Table C-13: Air Toxic Emission Factor for Solvents/Coatings Usage
- Table C-14: Air Toxic Emission Summary for Solvents/Coatings Usage
- Table C-15: Air Toxic Emission for Solvents/Coatings Usage By Modeled Source
- Table C-16: Air Toxic Emissions Factors and Emissions for Natural Gas Fired Emergency IC Engine
- Table C-17: Air Toxic Emissions for Trucks – DPM

- HRA Structures
  - Table C-18: Structure Parameters Used to Calculate Building Downwash
- HRA Receptors
  - Table C-19: Receptor Locations and Elevations
- HRA Results
  - Table C-20: Summary of HRA Results
  - Table C-21: Cancer Risk Driver By Substance – PMI Receptor 197
  - Table C-22: Cancer Risk Driver By Substance – MEIR Receptor 3756
  - Table C-23: Cancer Risk Driver By Substance – MEIW Receptor 3799
  - Table C-24: Chronic Risk Driver By Substance – PMI Receptor 197
  - Table C-25: Chronic Risk Driver By Substance – MEIR Receptor 3765
  - Table C-26: Chronic Risk Driver By Substance – MEIW Receptor 3799
  - Table C-27: 8-HR Chronic Risk Driver By Substance – PMI Receptor 196
  - Table C-28: 8-HR Chronic Risk Driver By Substance – MEIR Receptor 3750
  - Table C-29: 8-HR Chronic Risk Driver By Substance – MEIW Receptor 3799
  - Table C-30: Acute Risk Driver By Substance – PMI Receptor 2151
  - Table C-31: Acute Risk Driver By Substance – MEIR Receptor 3750
  - Table C-32: Acute Risk Driver By Substance – MEIW Receptor 3799
- HRA Figures
  - Buildings and Structures (Figure C-1)
  - All Sources (Figures C-2)
  - Central Processing Facility Sources (Figures C-3)
  - 1st Run One and ten per Million Cancer Risk Isopleths (Figures C-4)

    - 2nd Run One and ten per Million Cancer Risk Isopleths (Figures C-5)
    - Acute Non-Cancer Hazard Index Isopleth (Figure C-6)
    - 8-hour Chronic Non-Cancer Hazard Index Isopleth (Figure C-7)
    - Chronic Non-Cancer Hazard Index Isopleth (Figure C-8)
    - Project Boundary Coordinate Points (Figure C-9)
  - Modeling Files
    - AERMOD and Hotspots Analysis and Reporting Program Modeling Files (Electronic)

D. Ambient Air Quality Analysis
  - AAQA Project Emissions
    - Table D-1: Stationary Source Emissions Summary
    - Tables D-2: ROC Emissions for Fugitive Gas Service Components
    - Tables D-3: ROC Emissions for Fugitive Oil Service Components
    - Tables D-4: ROC Emissions for Tanks and Loading Rack
  - AAQA Sources
    - Table D-5: Project Sources' Locations and Parameters
  - Emission Rates and Results
    - Table D-6: Ambient Air Quality Assessment Emissions Excluding ROC
    - Table D-7: Ambient Air Quality Assessment Results
    - Table D-8: Class I Ambient Air Quality Incremental Analysis Results
    - Table D-9: ROC Ambient Air Quality Emission
  - AAQA Structures
    - Table D-10: Structure Parameters Used to Calculate Building Downwash
  - AAQA Receptors
    - Table D-11: Receptor Locations and Elevations
  - Modeling Files
    - AERMOD Modeling Files (Electronic)

E. Equipment Specifications
  - Detailed Equipment List
  - Steam Generator Specification
  - Flare Specification
  - Flow Meter Specification
  - Emergency Generator Specification
  - Miscellaneous Equipment
  - Fluid Throughput Measurement
  - SG Fuel Use Measurement
  - Sulfatreat® Monitoring and Media Replacement procedures
  - Gas Flaring Scenarios

F. Material Safety Data Sheets
  - Amerlock 400
  - Amershield
  - Hempadur 15570
  - Hempadur 17369
  - Surftreat
  - Interseal 670

EXECUTIVE SUMMARY

Insight Environmental Consultants, Inc. has completed an Air Quality Impact Analysis for the proposed Aera Energy LLC (Aera) East Cat Canyon Oil Field Redevelopment Project (Project). The proposed Project will consist of re-establishing oil production within the Brooks formation of the East Area of the State Designated Cat Canyon Oil Field. The Project site is located within the Solomon Hills northeast of the Gato Ridge mountain ranges within East Cat Canyon; it will be approximately ten miles southeast of the communities of Santa Maria and Orcutt located in northern Santa Barbara County, California.

Criteria pollutant emissions from reactive organic gases, carbon monoxide, nitrogen dioxide, sulfur dioxide, and suspended particulate matter up to 10 microns in diameter and particulate matter up to 2.5 microns in diameter from the proposed Project development will occur from re-establishing oil production in an existing oil field. Construction and drilling will occur in several phases between the years 2017 and 2049. Operational emissions will occur from employee mobile transportation emissions, stationary source equipment, and incidental activities including the provision of utilities and services. Greenhouse gas emissions will occur from construction and operational activities. Emissions were estimated using the California Emissions Estimator Model version 2013.2.2 (California Air Pollution Control Officers Association 2013), EMFAC2014 (California Air Resources Board 2011), and AP-42 Fifth Edition, Compilation of Air Pollutant Emission Factors (U.S. Environmental Protection Agency (Environmental Protection Agency) 1995 as amended). Project-related emissions were evaluated for compliance with National Ambient Air Quality Standards and California Ambient Air Quality Standards for the six criteria pollutants.

Evaluation of the Project's emissions determined that the Project will have a significant impact on the Santa Barbara County and South Central Coast Air Basin from unmitigated construction, operations and greenhouse gas related emissions, as shown in **Tables 5-2, 5-4 and 7-1** of this analysis.

The cumulative analysis considers a list of currently planned and pending projects in the Santa Maria Valley, Orcutt, and Los Alamos areas. Cumulative impacts were also evaluated and support a finding that the Project's contribution will be cumulatively considerable because the proposed Project's unmitigated emissions increment does exceed significance thresholds.

1.0 INTRODUCTION

This Air Quality Impact Analysis was prepared pursuant to the Santa Barbara County Air Pollution Control District's Environmental Review Guidelines (Santa Barbara County Air Pollution Control District 1995, revised 2000*)*, Santa Barbara County Air Pollution Control District's Scope and Content of Air Quality Sections in Environmental Documents (2014), the Santa Barbara County's Environmental Thresholds and Guidelines Manual (2008), the State of California Environmental Quality Act (California Environmental Quality Act) (Public Resources Code 21000 to 21177) and California Environmental Quality Act Guidelines (California Code of Regulations Title 14, Division 6, Chapter 3, Sections 15000 – 15387).

This Air Quality Impact Analysis provides: a general Project description; a discussion of applicable environmental thresholds; the regulatory and environmental setting related to air quality in the Project area; identification of air quality impacts of the proposed Project, Project alternatives, cumulative impacts; and recommended mitigation measures to reduce air quality impacts.

2.0 GENERAL PROJECT DESCRIPTION

The East Cat Canyon Oil Field Redevelopment Project will re-establish oil production in an existing oil field by implementing a thermal enhanced oil recovery process that is technically, economically, and environmentally feasible for oil recovery. Project plans include construction and restoration of well pads, construction and restoration of field access roads, and drilling of 296 wells including oil/gas production wells, steam injection wells, observation wells, water production wells, water injection wells, and fresh groundwater wells.

New processing facilities and field systems will be constructed. Processing facilities will include: 1) a production group station for bulk separation of produced gas and liquids, 2) a central processing facility for oil cleaning, water cleaning, water softening, oil storage, and oil sales, and 3) a steam generation site (up to six once through steam generators rated at 85 million British thermal units per hour each) for production of saturated steam to be used for thermal enhanced oil recovery. An additional 62.5 million British thermal units per hour steam generator will be used to generate steam from the Project's produced gas. No fresh water will be used to generate steam; only non-potable water will be used.

Field systems will include 1) a production gathering network, 2) a steam distribution network and 3) electrical power distribution and supervisory control and data acquisition networks. Project infrastructure will also include an office building, a multipurpose building, a warehouse and maintenance building, and a facility control building. A fresh water system with a 3,000 barrel tank and water distribution pipelines is also planned for utility purposes including fire protection, lavatories, showers, equipment cleaning, dust control, and minor landscape irrigation.

The Project has been designed to minimize grading and land disturbance by maximizing the use of existing roads, well pads, cleared areas, and contours wherever possible. Out of the approximate total 2,107.8 acre Project site, approximately 1,808 acres, or 85.8 percent will not be graded. Approximately 14.2 percent of the Project site will be graded. Earthwork volumes

will be balanced across the Project site in order to minimize the need for import or export of significant amounts of soil.

The primary Project site entrance is located at 6516 Cat Canyon Road. Vehicles and equipment entering the Project site travel across Cat Canyon Creek via an existing culvert crossing located just outside of the Aera Energy LLC property boundary. As proposed, the Project will utilize the existing crossing during the initial Project construction, while concurrently constructing a new Project site entrance located approximately 300 feet north (upstream) of the existing entrance. The Project will also include construction of a secondary access located along Long Canyon Road, on the eastern boundary of the Project site along with two smaller east side entrances from Long Canyon Road, which will be constructed to provide adequate access new well pads. Project site entrances will be connected via a primary site access road, which will be graded and paved concurrently with the Project site entrance construction activities.

The Project will be implemented in phases. Construction is scheduled to begin in 2017. Construction and drilling will occur in two phases through 2049; Phase I and Phase II. Phase I will include the construction of the production group station, central processing facility, steam generation site, fresh water distribution system, office building, main roadways and a beneficial reuse facility for soil and sand. Four of the seven steam generators will be installed during this Phase. Some of the Project's well pads and wells will be restored/developed during Phase I, along with the roadways, electrical distribution lines, and gathering and distribution pipelines to support those wells. Phase I activities will last approximately four years.

During Phase II, the remaining well pads will be restored/developed, the remaining wells will be drilled, along with associated roadways, electrical distribution lines, and gathering and distribution pipelines. Phase II will also expand the processing facility capacities, and add three additional steam generators. Phase II construction will start approximately three years after Phase I completion, and is expected to take up to two years. Phase II well drilling, along with the construction of roadways, electrical distribution lines, and gathering and distribution pipelines to support those wells, is planned to take place over a period of ten years. Production from the Project is expected to continue for more than 30 years.

The Project site is located within the Solomon Hills northeast of the Gato Ridge mountain ranges within East Cat Canyon; approximately ten miles southeast of the communities of Santa Maria and Orcutt located in northern Santa Barbara County, California. The current main entrance is located at 6516 Cat Canyon Road, south of Sisquoc, California. The Project site is located within the South Central Coast Air Basin and within the jurisdiction of the Santa Barbara County Air Pollution Control District. **Figure 2-1** provides the Project and regional location of the proposed Project.

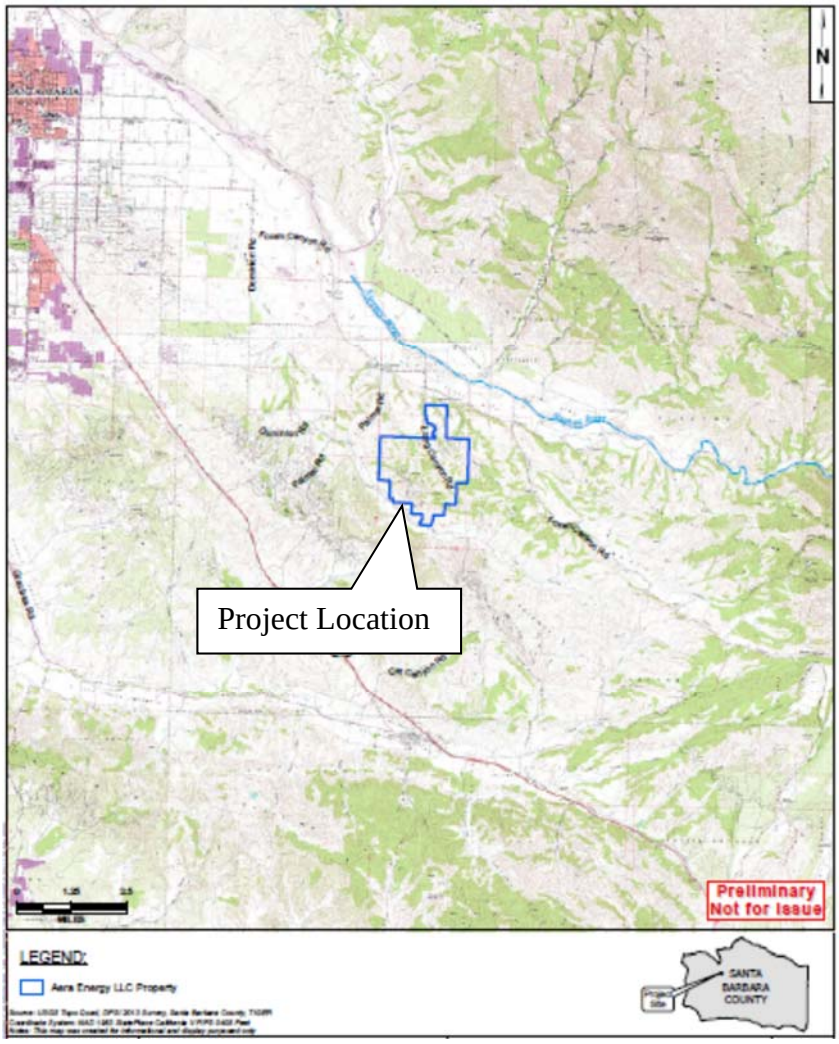

Figure 2-1 - Project and Regional Location

The proposed Project area will consist of approximately 2,100 acres of Assessor Parcel Numbers 101-040-005, 101-040-006, 101-040-011, 101-040-012, 101-040-013, 101-040-014, 101-040-019, 101-040-020, 101-050-013, 101-050-014, 101-050-042, 101-070-007, and 129-210-017.

Figure 2-2 provides the Project site's aerial perspective. The Project site is surrounded by several active oil fields, dry land grazing lands, and approximately 30 rural residences located within 0.5 miles from the southern, eastern, and northern borders of the Project site. Historical land use at the Project site includes oil production dating back to 1888, along with onsite structures and facilities for oil production and dry land grazing. The development Project activity will be focused predominantly on the southwest portion of the property, where the greater density of existing roads, well pads and previous oil production facility footprint already exists.

Figure 2-2 - Project Site Aerial

3.0 SANTA BARBARA COUNTY ENVIRONMENTAL THRESHOLDS

OPERATIONS THRESHOLDS FOR CRITERIA POLLUTANTS

The thresholds used to determine whether or not there is the potential for a significant impact are from Santa Barbara County Environmental Thresholds and Guidelines Manual (Santa Barbara County 2008). A proposed Project would have a less than significant air quality impact on the environment if operation of the Project will:

- Emit (from all Project sources, mobile and stationary) less than the daily trigger for offsets set in the Air Pollution Control District's New Source Review Rule 802 (55 pounds per day for reactive organic compounds and nitrogen oxides and 80 pounds per day for particulate matter);

- Emit less than 25 pounds per day of nitrogen oxides or reactive organic compounds from motor vehicle trips only;

- Not cause or contribute to a violation of any National Ambient Air Quality Standards or California Ambient Air Quality Standards (except ozone);

- Not allow land uses that create objectionable odors or expose sensitive receptors to objectionable odors;

- Not exceed the Air Pollution Control District's health risk public notification thresholds adopted by the Air Pollution Control District Board for air toxics (i.e., one in million cancer risk and an acute and chronic hazard indices of one); and

- Be consistent with the adopted Federal and State air quality plans.

The State of California Environmental Quality Act Guideline §15355 defines cumulative impacts as "two or more individual effects which, when considered together, are considerable or which compound or increase other environmental impact." The individual effects may be changes resulting from a single project and more than one project (California Environmental Quality Act Guidelines §15355(a).) Cumulative impacts may result from individually minor but collectively significant projects taking place over a period of time. (California Environmental Quality Act Guidelines §15355(b)).

CONSTRUCTION THRESHOLDS FOR CRITERIA POLLUTANTS

Emissions from construction activities are normally short-term. Currently, neither the County nor the Santa Barbara County Air Pollution Control District have daily or quarterly quantifiable emission thresholds established for short-term construction emissions. The Final 2013 Clean Air Plan (SBCAPCD 2015) and the Santa Barbara County Environmental Thresholds and Guidelines Manual (SBC 2008) require that PM_{10} impacts from construction dust emissions be discussed in the Air Quality Impact Analysis and that standard mitigation measures be implemented (e.g., watering). The Santa Barbara County Air Pollution Control District's *Scope and Content of Air Quality Sections in Environmental Documents* states "Although quantitative thresholds of significance are not currently in place for short-term emissions, California Environmental Quality Act requires that short-term impacts, such as exhaust emissions from construction equipment and fugitive dust generation during grading, be discussed in the environmental document". However, the Santa Barbara County Air Pollution Control District requires construction projects that emit more than 25 tons per year to obtain emission offsets under Rule 804 and would consider these emissions to be significant under California Environmental Quality Act. Santa Barbara County Air Pollution Control District Rule 202 (related to permits and offset requirements and exemptions), Section D.16, requires that:

"Notwithstanding any exemption in these rules and regulations (Rule 202), if the combined emissions from all construction equipment used to construct a stationary source which requires an Authority to Construct have a projected actual in excess of 25 tons of any pollutant, except carbon monoxide, in a 12 month period, the owner of the stationary source shall provide offsets…"

GREENHOUSE GAS EMISSION THRESHOLDS

The California Natural Resources Agency amended the Guidelines for Implementation of the California Environmental Quality Act in 2009, placing requirements on California Environmental Quality Act Lead Agencies about the treatment of greenhouse gas emissions in environmental documents. Among other things, these amendments established that lead agencies must "…make a good-faith effort, based to the extent possible on scientific and factual data, to describe, calculate, or estimate the amount of greenhouse gas emissions resulting from a project". These amendments further obligate the lead agency to consider if the estimated amount of greenhouse emissions from a proposed project exceeds a threshold of significance that the lead agency determines to apply to the project, and consider the extent to which the project complies with regulations or requirements adopted to implement a statewide, regional, or local plan for the reduction or mitigation of greenhouse gas emissions.

The Santa Barbara County Air Pollution Control District recently established a greenhouse gas significance threshold. According to the Santa Barbara County Air Pollution Control District's revised Environmental Review Guidelines, a proposed stationary source project will not have a significant greenhouse gas impact, if operation of the project will:

- Emit less than the screening significance level of 10,000 metric tons per year carbon dioxide equivalent, or
- Show compliance with an approved greenhouse gas emission reduction plan or greenhouse gas mitigation program which avoids or substantially reduces greenhouse gas emissions (sources subject to the Assembly Bill 32 Cap-and-Trade requirements pursuant to Title 17, Article 5 (California Cap on Greenhouse Gas Emissions and Market-based Compliance Mechanisms) would meet the criteria), or
- Show consistency with the Assembly Bill 32 Scoping Plan greenhouse gas emission reduction goals by reducing project emissions 15.3 percent below Business As Usual.

The County of Santa Barbara also established a greenhouse gas significance threshold in May of 2015. According to an approved amendment to the County of Santa Barbara's Environmental Thresholds and Guidelines Manual, all industrial and stationary source projects would be subject to a bright-line threshold of 1,000 metric tons of carbon dioxide equivalent per year to determine if greenhouse gas emissions constitute a significant cumulative impact.

Projects exceeding the 1,000 metric tons of carbon dioxide equivalent per year significance threshold would be required to reduce their greenhouse gas emissions to the applicable threshold, where feasible, through onsite reductions and offsite reduction programs approved by the County of Santa Barbara. This county threshold will be used as the threshold to determine significance for this Project.

4.0 REGULATORY AND ENVIRONMENTAL SETTING

Regulatory Setting

Federal, State, and local agencies have established air quality standards and regulations that govern the proposed Project. A summary is provided below.

FEDERAL REGULATIONS

The Federal Clean Air Act of 1970 directs the attainment and maintenance of the National Ambient Air Quality Standards. The 1990 Amendments to this Act addressed air pollutant emissions that affect local, regional, and global air quality. The main elements of the 1990 Clean Air Act Amendments are summarized below:

- Title I, Attainment and maintenance of National Ambient Air Quality Standards;
- Title II, Motor vehicles and fuel reformulation;
- Title III, Hazardous air pollutants;
- Title IV, Acid deposition;
- Title V, Facility operating permits (describes requirements for Part 70 permits);
- Title VI, Stratospheric ozone protection; and
- Title VII, Enforcement.

The U.S. Environmental Protection Agency is responsible for implementing the Federal Clean Air Act and establishing the National Ambient Air Quality Standards for the six "Criteria Pollutants": carbon monoxide, lead, nitrogen dioxide, sulfur dioxide, particulates, and ozone.

STATE REGULATIONS

California Air Resources Board.

The California Air Resources Board has jurisdiction over all air pollutant sources in the State and established the California Ambient Air Quality Standards. California Air Resources Board has delegated its authority for stationary sources to local air districts but has retained authority over emissions from mobile sources. Comparison of the criteria pollutant concentrations in ambient air to the California Ambient Air Quality Standards determines State attainment status for criteria pollutants in a given region. California Air Resources Board, in partnership with the local air quality management districts within California, has developed a pollutant monitoring network to aid attainment of California Ambient Air Quality Standards. The network consists of numerous monitoring stations located throughout California that monitor and report the ambient concentrations of criteria and related pollutants concentrations in air.

California Clean Air Act (California Health and Safety Code, Division 26).

The California Clean Air Act (California Health and Safety Code, Division 26) went into effect on January 1, 1989, and was amended in 1992. The California Clean Air Act mandates achieving the health-based California Ambient Air Quality Standards at the earliest practical

date.

Air Toxics "Hot Spots" Information and Assessment Act of 1987 – AB2588 (California Health and Safety Code, Division 26, Part 6).

The Hot Spots Act requires an inventory of air toxics emissions from individual facilities, an assessment of health risk, and notification of potential significant health risk.

California Health and Safety Code Sections 25531–25543, The Calderon Bill (SB 1889).

Sections 25531–25543 of the California Health and Safety Code set forth changes in the following four areas: 1) provide guidelines to identify a more realistic health risk; 2) require high-risk facilities to submit an air toxic emission reduction plan; 3) hold air pollution control districts accountable for ensuring that the plans will achieve their objectives; and 4) require high-risk facilities to achieve their planned emission reductions.

California Diesel Fuel Regulations

With the California Diesel Fuel Regulations, the California Air Resources Board set sulfur limitations for diesel fuel sold in California for use in on-road and off-road motor vehicles. Under this rule, diesel fuel used in motor vehicles was limited to 500-parts per million sulfur since beginning in 1993. This sulfur limit was later reduced to 15-parts per million, effective September 1, 2006.

LOCAL

Local Air Pollution Control Districts in California have jurisdiction over stationary sources in their respective areas and must adopt plans and regulations necessary to demonstrate attainment of Federal and State air quality standards. As directed by the Federal and State Clean Air Acts, local air districts are required to prepare plans with strategies for attaining and maintaining State and Federal ozone standards.

In the Project area, air quality rules are promulgated by the Santa Barbara County Air Pollution Control District. With few exceptions (including particulate emissions from mobile sources), most of the Santa Barbara County Air Pollution Control District Rules apply to stationary sources only, since California Air Resources Board retains authority for mobile air emissions sources. In order to ultimately achieve the air quality standards, the rules limit emissions and permissible impacts from the proposed Project. Some rules also specify emission controls and control technologies for each type of emitting source. The rules also include requirements for obtaining an Authority to Construct permit and a Permit to Operate.

Santa Barbara County Air Pollution Control District

The Santa Barbara County Air Pollution Control District has jurisdiction over air quality attainment in the Santa Barbara County portion of the South Central Coast Air Basin. All aspects of the proposed Project occurring in Santa Barbara County must obtain a Santa Barbara County Air Pollution Control District permit, if applicable. The Santa Barbara County Air

Pollution Control District also has jurisdiction over Outer Continental Shelf sources located within 25 miles (40 kilometers) of the seaward boundaries of the State of California (Rule 903). Increases in emissions of any non-attainment pollutant or its pre-cursor from a new or modified project that exceed the thresholds which have been identified in the Santa Barbara County Air Pollution Control District Regulation VIII, are required to be mitigated. Rules which apply to Onshore Petroleum Extraction and Processing are summarized below.

Rule 201, Permits Required – Specifies the permits required for construction or operation of equipment that emits air contaminants.
Rule 301, Circumvention – This rule prohibits the concealment of any activity that would otherwise constitute a violation of Division 26 (Air Resources) of the California Health and Safety Code and the Santa Barbara County Air Pollution Control District rules and regulations.
Rule 302, Visible Emissions – limits discharge of visible emissions designated as No. 1 on the Ringelmann Chart to no more than three minutes in any hour.
Rule 303, Nuisance – No discharges which cause injury, detriment, nuisance or annoyance are allowed.
Rule 304 (N), Particulate Matter, Northern Zone – No discharges or any particulate matter in excess of 0.3 grain per cubic foot of gas at standard conditions are allowed.
Rule 305 (S), Particulate Matter Concentration, Southern Zone - No discharges or any particulate matter in excess of the concentration shown in Table 305 (a).
Rule 309, Specific Contaminants – No discharge of sulfur in excess of 0.2 percent by volume are allowed.
Rule 310 – Odorous Sulfates – These rules prohibit air emissions that cause a nuisance, e.g., odorous sulfates emitted near odor-sensitive receptors.
Rule 311, Sulfur Content of Fuels – Limits burning of gaseous fuel containing high concentrations of sulfur.
Rule 317, Organic Solvents – Limits discharge of organic solvent materials into atmosphere.
Rule 324, Disposal and Evaporation of Solvents – Limits disposal of photochemically reactive solvents.
Rule 325, Crude Oil Production and Separation – Places requirements on crude oil storage and handling.
Rule 326, Storage of Reactive Organic Compound Liquids - Places requirements on crude oil and reactive organic compound liquids storage and handling.
Rule 331, Fugitive Emissions Inspection and Maintenance – Sets limits and rules on liquid or gaseous hydrocarbon leaks.
Rule 342, Control of Oxides of Nitrogen – Limits nitrogen oxide emissions from boilers, steam generators and process heaters.
Rule 343, Petroleum Storage Tank Degassing – Places limits on tank degassing.
Rule 344, Petroleum Sumps, Pits, and Well Cellars – Bans primary sumps and limits pits and post-primary sumps.
Rule 359, Flares and Thermal Oxidizers – Places limits on flares and thermal oxidizers.
Rule 360, Emissions of Oxides of Nitrogen – Limits nitrogen oxides from Large Water Heaters and Small Boilers.
Rule 361, Small Boilers, Steam Generators and Process Heaters – Limits emissions from boiler, steam generator and process heater.
Rule 370, Potential to Emit – Limitations for Part 70 Sources – Specifies actual emission level criteria below which Part 70 sources are exempt from Part 70 permit requirements.

Regulation XIII – Defines criteria for Part 70 source applicability, and permit content and requirements for Part 70 sources.
Rule 802, Non-Attainment Review – For new or modified emission sources, this rule specifies emission limits that would trigger emission offsets (80 pounds/day for particulate matter of 10 microns, 55 pounds/day for any non-attainment pollutant and 150 pounds/day for carbon monoxide) or trigger Best Available Control Technology requirements (25 pounds/day for any non-attainment pollutant and 150 pounds/day for carbon monoxide). Note that currently, the area is in non-attainment for ozone (with nitrogen oxides and reactive organic compounds as ozone precursors) and particulate matter of 10 microns (with sulfur oxides as a particulate precursor).

CRITERIA AIR POLLUTANT STANDARDS

Protection of the public health is maintained through the attainment and maintenance of standards for ambient concentrations of various criteria air pollutants in the atmosphere and the enforcement of emissions limits for individual stationary sources. The Federal Clean Air Act requires that the Environmental Protection Agency establish National Ambient Air Quality Standards to protect the health, safety, and welfare of the public. National Ambient Air Quality Standards have been established for ozone, carbon monoxide, nitrogen dioxide, sulfur dioxide, particulate matter of 10 microns and particulate matter of less than 2.5 microns, and lead. California has also adopted California Ambient Air Quality Standards for these "criteria" air pollutants that are more stringent than the corresponding National Ambient Air Quality Standards along with standards for hydrogen sulfide, vinyl chloride (chloroethene) and visibility reducing particles. The Clean Air Act Amendments of 1977 required states to identify areas that were in non-attainment of the National Ambient Air Quality Standards and to develop State Implementation Plans containing strategies to bring these non-attainment areas into compliance. Current ambient air quality standards and the current designation/classification for both National Ambient Air Quality Standards and California Ambient Air Quality Standards are presented below.

Under the provisions of the Federal Clean Air Act, Santa Barbara County has been classified as non-attainment, attainment, unclassified/attainment or unclassified under the established National Ambient Air Quality Standards and California Ambient Air Quality Standards for various criteria pollutants. **Table 4-1** provides the National Ambient Air Quality Standards and California Ambient Air Quality Standards as well as Santa Barbara County's designation and classification based on the various criteria pollutants.

Table 4-1 - Federal and California Standards and Santa Barbara County Attainment Status

Pollutant	Averaging Time	Federal Standard	SBC Federal Attainment Status	State Standard	SBC State Attainment Status
Ozone	1-hour *	---	---	0.09 parts per million (180 µg/m^3)	Non-attainment
	8-hour**	0.075	Unclassified / Attainment	0.070 parts per million	Non-attainment
Particulate Matter (PM_{10})	Annual arithmetic mean	revoked	Attainment	20 µg/m^3	Non-Attainment
	24-hour	150 µg/m^3	Attainment	50 µg/m^3	Non-Attainment
Particulate Matter ($PM_{2.5}$)	Annual arithmetic mean	12 µg/m^3	Unclassified / Attainment	12 µg/m^3	Unclassified
	24-hour	35 µg/m^3	Unclassified / Attainment	---	---
Carbon Monoxide	8-hour	9 parts per million (10 mg/m^3)	Attainment	9 parts per million (10 mg/m^3)	Attainment
	1-hour	35 parts per million (40 µg/m^3)	Attainment	20 parts per million (23 mg/m^3)	Attainment
Nitrogen Dioxide* **	Annual Average	53 ppb	Attainment	0.03 parts per million	Attainment
	1-hour	100 ppb	Attainment	0.18 parts per million	Attainment
Sulfur Dioxide	Annual average	revoked	---	---	---
	24-hour	revoked	---	0.04 parts per million (105 µg/m^3)	Attainment
	1-hour	75 ppb	*	0.25 parts per million (655 µg/m^3)	Attainment
Sulfates	24-hour	---	---	25 µg/m^3	Attainment
Lead	Calendar quarter	1.5 µg/m^3	Attainment	---	---
	30 day average	---	---	1.5 µg/m^3	Attainment
	Rolling 3-month average	0.15 µg/m^3	Unclassified	---	---
Hydrogen Sulfide	1-hour	---	---	0.03 parts per million (42 µg/m^3)	Attainment
Vinyl Chloride (chloroethene)	24-hour	---	---	0.010 parts per million (46 µg/m^3)	---
Visibility Reducing Particles	8 hour (1000 to 1800 PST)	---	---	---	Attainment

Definitions:
ppm = parts per million
ppb = parts per billion
mg/m3 = milligrams per cubic meter
µg/m ^{3}= micrograms per cubic meter
SBC = Santa Barbara County

Notes:
* 1-Hour ozone standard revoked effective June 15, 2005.
** Environmental Protection Agency finalized the revised (2008) 8-hour ozone standard of 0.075 parts per million on March 27, 2008. The 1997 8-hour ozone standard of 0.08 parts per million has not been revoked. In the January 19, 2010 Federal Register, Environmental Protection Agency proposed to revise the 2008 ozone National Ambient Air Quality Standards of 0.075 parts per million to a National Ambient Air Quality Standards in the range of 0.060 to 0.070 parts per million. For more information, see www.epa.gov/groundlevelozone/
***The State nitrogen dioxide ambient air quality standard was amended on February 22, 2007, to lower the 1-hour standard to 0.18 parts per million and establish a new annual standard of 0.030 parts per million. On January 22, 2010, Environmental Protection Agency set a new 1-hour nitrogen dioxide standard of 100 parts per billion. They also retained the annual nitrogen dioxide standard of 53 parts per billion.

Source: Santa Barbara County Air Pollution Control District 2014; California Air Resources Board 2014a

The California Air Resources Board operates an air quality monitoring network that provides information on average concentrations of those pollutants for which state or Federal agencies have established National Ambient Air Quality Standards and California Ambient Air Quality Standards. Information from the Project area monitoring stations is available from the California Air Resources Board (2014) and presented below under Environmental Setting.

GREENHOUSE GAS EMISSIONS REGULATIONS

Federal Greenhouse Gas Regulations

Clean Air Act

The Environmental Protection Agency is developing standards for regulating greenhouse gas emissions from mobile and stationary sources under the Clean Air Act, Section 202(a). Two initiatives are underway to address mobile sources: 1) In coordination with the National Highway Traffic Safety Administration, steps are being taken to enable a new generation of clean vehicles to reduce up to 3,100 million metric tons of carbon dioxide emissions; and 2) the implementation of a Renewable Fuel Standard program to reduce greenhouse gas emissions by up to 138 million metric tons of carbon dioxide emissions. Three initiatives are underway to address stationary sources: 1) Establish new carbon pollution standards for power plants; 2) Implement the 2010 Final Greenhouse Gas Tailoring Rule; and 3) implement the Prevention of Significant Deterioration permitting program to greenhouse gas. The Environmental Protection Agency also oversees an emissions reporting program for greenhouse gas from large emission sources.

State Greenhouse Gas Regulations and Programs

Assembly Bill 32

California's Assembly Bill 32 was signed into law by Governor Arnold Schwarzenegger on September 27, 2006. Assembly Bill 32 requires the state to reduce its global warming emissions to 1990 levels by the year 2020.

The Act authorizes the California Air Resources Board to adopt market-based compliance mechanisms including Cap-and-Trade, and allows a one-year extension of the targets under extraordinary circumstances. The regulatory steps laid out in Assembly Bill 32 require California Air Resources Board to: adopt early action measures to reduce greenhouse gases; establish a State-wide greenhouse gas emissions cap for 2020 based on 1990 emissions; adopt mandatory reporting rules for significant source of greenhouse gases; and adopt a scoping plan indicating how emission reductions will be achieved via regulations, market mechanisms and other actions; and adopt the regulations needed to achieve the maximum technologically feasible and cost-effective reductions in greenhouse gases.

In June 2007, California Air Resources Board adopted three discrete early action measures which include the following: a low carbon fuel standard; reduction of HFC-134a emissions from non-professional servicing of motor vehicle air conditioning systems; and improved landfill methane capture. California Air Resources Board estimates that by 2020 the reductions from those three discrete early action measures would be approximately 13 million metric tons to 26 million metric tons carbon dioxide-equivalent (CAPCOA 2008).

California Air Resources Board: Scoping Plan
On December 11, 2008, the California Air Resources Board adopted the Scoping Plan as directed by Assembly Bill 32, and approved its first update on May 22, 2014 (California Air Resources Board 2008; updated 2014). The Scoping Plan proposes a set of actions designed to reduce overall greenhouse gas emissions in California. The actions include a Cap-and-Trade system, car standards, low carbon fuel standards, landfill gas control methods, energy efficiency, green buildings, renewable electricity standards, and refrigerant management programs.

The Scoping Plan provides an approach to reduce emissions to achieve the 2020 target, and to initiate the transformations required to achieve the 2050 target. The 2008 Scoping Plan indicates that a 29 percent reduction below the estimated "business as usual" levels would be necessary to return to 1990 levels by 2020. The 2011 supplement (Functional Equivalent Document) to the Scoping Plan emission inventory revisions indicated that a 16 percent reduction below the estimated "business as usual" levels would be necessary to return to 1990 levels by 2020. This revision was due to the slowing economy between 2008 and 2010.

California businesses are required to report their annual greenhouse gas emissions. This requirement is contained within sections 95100-95133 of Title 17, California Code of Regulations. It establishes who must report greenhouse gas emissions to the California Air Resources Board and sets forth the requirements for measuring, calculating, reporting and verifying those emissions. The rule specifies a reporting threshold of 10,000 metric tons of carbon dioxide.

California Climate Action Registry General Reporting Protocol
The California Climate Action Registry is a program of the Climate Action Reserve and serves as a voluntary greenhouse gas registry. The California Climate Action Registry was formed in 2001 when a group of chief executive officers, who were investing in energy efficiency projects that reduced their organizations' greenhouse gas emissions, asked the state to create a place to accurately report their emissions history. The California Climate Action Registry publishes a General Reporting Protocol, which provides the principles, approach, methodology, and procedures to estimate such emissions.

California Air Resources Board Mandatory Reporting Regulation
The Air Resources Board approved a mandatory reporting regulation in December 2007, which became effective January 2009 (which appears at sections 95100-95133 of Title 17, California Code of Regulations), which required the mandatory reporting of greenhouse gas emissions for specific industries emitting more than 10,000 metric tons of carbon dioxide equivalent per year.

California Air Resources Board Cap-and-Trade Regulation
An element of the Assembly Bill 32 Scoping Plan to reduce greenhouse gas is a Cap-and-Trade system applicable to specific industries that emit more than 25,000 metric tons of carbon dioxide equivalent per year. The program places an overall cap or limit on greenhouse gas emissions. Industries subject to the Cap-and-Trade systems then must lower emissions by engaging in the Cap-and-Trade system. The program started on January 1, 2012, with an enforceable compliance obligation beginning with the 2013 emissions from stationary sources. Beginning

in 2013, the petroleum and natural gas systems sector stationary and related combustion, process vents, and flare emissions were subject to cap and trade if the total emissions from these sources at any one facility exceeded 25,000 metric tons of carbon dioxide equivalent per year. Starting in 2015, suppliers of Natural Gas and transportation fuels will be subject to Cap-and-Trade for combustion emissions from natural gas deliveries made to non-covered entities or used for transportation fuels.

The Process for Analyzing Greenhouse Gas Emission related to CEQA:

Senate Bill 97 – California Environmental Quality Act: Greenhouse Gas Emissions
In August 2007, Governor Schwarzenegger signed into law Senate Bill 97 – California Environmental Quality Act: Greenhouse Gas Emissions stating, "This bill advances a coordinated policy for reducing greenhouse gas emissions by directing the Office of Planning and Research and the Resources Agency to develop California Environmental Quality Act guidelines on how state and local agencies should analyze, and when necessary, mitigate greenhouse gas emissions."

Specifically, Senate Bill 97 required the Office of Planning and Research, by July 1, 2009, to prepare, develop, and transmit to the Resources Agency guidelines for the feasible mitigation of greenhouse gas emissions or the effects of greenhouse gas emissions, as required by California Environmental Quality Act, including, but not limited to, effects associated with transportation or energy consumption. Office of Planning and Research would be required to periodically update the guidelines to incorporate new information or criteria established by the California Air Resources Board pursuant to the California Global Warming Solutions Act of 2006. Senate Bill 97 also identifies a limited number of types of projects that would be exempt under California Environmental Quality Act from analyzing greenhouse gas emissions.

On January 7, 2009, the Office of Planning and Research issued its draft California Environmental Quality Act guidelines revisions pursuant to Senate Bill 97. On March 16, 2010, the Office of Administrative Law approved the Amendments, and filed them with the Secretary of State for inclusion in the California Code of Regulations. The Amendments became effective on March 18, 2010.

Consistent with Senate Bill 97, on March 18, 2010, the California Environmental Quality Act Guidelines were amended to include references to greenhouse gas emissions. The amendments offer guidance regarding the steps lead agencies should take to address climate change in their California Environmental Quality Act documents. According to office of planning and research, lead agencies should determine whether greenhouse gas may be generated by a Proposed Project, and if so, quantify or estimate the greenhouse gas emissions by type and source. Second, the lead agency must assess whether those emissions are cumulatively significant. When assessing whether a Project's effects on climate change are cumulatively considerable, even though its greenhouse gas contribution may be individually limited, the lead agency must consider the impact of the Project when viewed in connection with the effects of past, current, and probable future projects. Finally, if the lead agency determines that the greenhouse gas emissions from the Proposed Project are potentially significant, it must investigate and implement ways to avoid, reduce, or otherwise mitigate the impacts of those emissions. The Amendments do not identify a threshold of significance for greenhouse gas emissions, nor do

they prescribe assessment methodologies or specific mitigation measures. The Preliminary Amendments maintain California Environmental Quality Act discretion for lead agencies to establish thresholds of significance based on individual circumstances.

The guidelines developed by the Office of Planning and Research provide the lead agency with discretion in determining what methodology is used in assessing the impacts of greenhouse gas emissions in the context of a particular Project. This guidance is provided because the methodology for assessing greenhouse gas emissions is expected to evolve over time. The Office of Planning and Research guidance also states that the lead agency can rely on qualitative or other performance based standards for estimating the significance of greenhouse gas emissions.

Environmental Setting

CLIMATE AND METEOROLOGY

Santa Barbara County and the South Central Coast Air Basin has a Mediterranean climate characterized by mild winters and warm, dry summers. The influence of the Pacific Ocean causes mild temperatures year-round along the coast, while inland areas experience a wider range of temperatures. The wind blows predominantly from the west and northwest and to a lesser extent from the east and southeast. Wind speeds average five miles per hour with occasional gusts above 30 miles per hour.

Table 4-2 summarizes the 2013 climatic data collected at the Santa Maria weather station, the closest recording station to the Project area providing data to the public.

Table 4-2 - 2013 Climatic Data for the Project Area

Parameter	Santa Maria Data
Mean Daily Temperature range	40-77, degrees Fahrenheit
Range Maximum Daily Temperature	52-94, degrees Fahrenheit
Range Minimum Daily Temperature	25-62, degrees Fahrenheit
Average Annual Precipitation	3.03 inches
Peak Winds, miles per hour	37-106 (gust)

Source: Wunderground History for Santa Maria, 2013; California Air Resources Board 2014a

EXISTING AIR QUALITY

For the purposes of background data and this air quality assessment, this analysis relied on data collected in the last three years for the California Air Resources Board monitoring stations that are located in the closest proximity to the proposed Project site. **Table 4-3** provides the background concentrations for ozone, particulate matter of 10 microns, particulate matter of less than 2.5 microns, carbon monoxide, nitrogen dioxide, sulfur dioxide, and lead as of August 2015. Information is provided for the Santa Maria monitoring station at 906 S. Broadway for 2012 through 2014. No data is available for hydrogen sulfide, Vinyl Chloride or other toxic air contaminants in Santa Barbara County.

Table 4-3 - Existing Air Quality Monitoring Data in Project Area

Pollutant and Monitoring Station Location	Maximum Concentration			Days Exceeding Standard		
	2012	2013	2014	2012	2013	2014
O_3 – 1-hour CAAQS (0.09 ppm)						
Santa Maria – 906 S. Broadway	0.057	0.064	0.074	0	0	0
O_3 – 8-hour CAAQS (0.07 ppm)						
Santa Maria – 906 S. Broadway	0.052	0.060	0.068	0	0	0
O_3 – 8-hour NAAQS (0.075 ppm)						
Santa Maria – 906 S. Broadway	0.051	0.060	0.068	0	0	0
PM10 – 24-hour CAAQS (50 µg/m3)						
Santa Maria – 906 S. Broadway	72.0	109.3	74.4	10	15	5
PM10 – 24-hour NAAQS (150 µg/m^3)						
Santa Maria – 906 S. Broadway	*	107.0	72.6	*	0	0
PM2.5 - 24-hour NAAQS (35 µg/m3)						
Santa Maria – 906 S. Broadway	32.0	20.4	17.6	0	0	0
CO - 8-Hour CAAQS and NAAQS (9.0 ppm)						
Santa Maria – 906 S. Broadway	1.11	*	*	0	0	0
NO2 - 1-Hour CAAQS (0.18 ppm)						
Santa Maria – 906 S. Broadway	0.047	0.042	0.048	0	0	0
NO2 - 1-Hour NAAQS (0.10 ppm)						
Santa Maria – 906 S. Broadway	0.0472	0.0426	0.0482	0	0	0
SO2 – 24-hour Concentration - CAAQS (0.04 ppm) and NAAQS (0.14 ppm)						
Lompoc – H Street	0.002	0.002	*	*	*	*

Definitions:
ppm= parts per million
NAAQS = National Ambient Air Quality Standards
CAAQA = California Ambient Air Quality Standards
O_3 = Ozone
PM_{10} = particulate matter up to 10 micron in diameter
$PM_{2.5}$ = particulate matter up to 2.5 micron in diameter
CO = Carbon Monoxide
NO_2 = Nitrogen Dioxide
SO_2 = Sulfur Dioxide

Notes:
* There was insufficient (or no) data available to determine the value.

Source: California Air Resources Board 2015

The following is a description of criteria pollutants, typical sources and health effects and the recently documented pollutant levels in the Project vicinity.

Ozone

Ozone is commonly known as smog. It is created in a photochemical process by emissions from nitrogen oxides and volatile organic compounds. High levels of ozone can cause eye irritation and impair respiratory functions in humans. People with lung disease, children, older adults, and people who are active outdoors may be particularly sensitive to ozone. High levels of ozone can also affect plants and materials.

Significant ozone generation requires about one to three hours in a stable atmosphere with precursor pollutants and strong sunlight. For this reason, the months of April through October generally comprise the "ozone season." Ozone is a regional pollutant because ozone precursors (nitrogen oxides and volatile organic compounds) are transported and diffused by wind concurrently with the reaction process. The data contained in **Table 4-3** shows that for the 2012 through 2014 period, the Project area has not exceeded the State 1-hour average ambient ozone standard or the Federal and State 8-hour average ambient ozone standards.

Suspended Particulate Matter

Suspended Particulate Matter pollution consists of airborne particles resulting from many kinds of sources, including industrial and agricultural operations, combustion, atmospheric photochemical reactions, and natural activities including wind-raised dust and ocean spray. The largest sources of suspended particulate matter in Santa Barbara County are vehicle movements over paved and unpaved roads, demolition and construction activities, farming/cattle grazing operations, and unplanned fires.

Both state and federal air quality standards exist for suspended particulate matter smaller than 10 microns, which are referred to as "PM_{10}". After studies showed that the smaller-diameter suspended particulates represented a greater health hazard, the Environmental Protection Agency and the State of California established additional ambient air quality standards for particulate matter of less than 2.5 microns, known as "$PM_{2.5}$".

Particulate matter up to 10 microns in diameter and particulate matter of less than 2.5 microns are considered regional pollutants in Santa Barbara County with elevated levels typically occurring over a wide geographic area. Concentrations tend to be highest in the winter, during periods of high atmospheric stability and low wind speed. In the respiratory tract, very small particles of certain substances may produce injury by themselves, or may contain absorbed gases that are injurious. Particulates of aerosol size suspended in the air can both scatter and absorb sunlight, producing haze and reducing visibility. They can also damage materials.

The Project area is classified as nonattainment under the California ambient air quality standards for particulate matter up to 10 microns in diameter and as attainment under the National ambient air quality standards for particulate matter up to 10 microns in diameter and particulate matter of less than 2.5 microns.

Table 4-3 shows that particulate matter up to 10 microns in diameter levels at the Santa Maria monitoring stations exceeded the California ambient air quality standard for particulate matter up to 10 microns in diameter over the three-year period of 2012 through 2014, but did not exceed the national ambient air quality standard for particulate matter up to 10 microns in diameter and particulate matter of less than 2.5 microns.

Carbon Monoxide

Ambient carbon monoxide concentrations normally correspond closely to the spatial and temporal distributions of vehicular traffic. Relatively high concentrations of carbon monoxide would be expected along heavily traveled roads and near busy intersections. Wind speed and atmospheric mixing also influence carbon monoxide concentrations; however, under inversion conditions prevalent in the South Central Coast Air Basin, carbon monoxide concentrations may be more uniformly distributed over a broad area.

Internal combustion engines, principally in vehicles, produce carbon monoxide due to incomplete fuel combustion. Various industrial processes also produce carbon monoxide emissions through incomplete combustion. Gasoline-powered motor vehicles are typically the

major source of this contaminant. Carbon monoxide does not irritate the respiratory tract, but passes through the lungs directly into the blood stream, and by interfering with the transfer of fresh oxygen to the blood, deprives sensitive tissues of oxygen, thereby aggravate cardiovascular disease, causing fatigue, headaches, and dizziness. Carbon monoxide is not known to have adverse effects on vegetation, visibility, or materials.

Table 4-3 reports carbon monoxide levels at the Santa Maria monitoring station only during 2012 when it was below the California Ambient Air Quality Standards and National Ambient Air Quality Standards. Historically, Santa Maria data for carbon monoxide has been below the California Ambient Air Quality Standards and National Ambient Air Quality Standards.

Nitrogen Dioxide and Hydrocarbons

Santa Barbara County has been designated as an attainment area for the National Ambient Air Quality Standards for nitrogen dioxide. Mobile sources and oil and gas production account for a large proportion of the county's nitrogen oxide emissions, most of which is emitted as nitrogen dioxide. Combustion in motor vehicle engines, power plants, refineries and other industrial operations are the primary sources in the region. Railroads and aircraft are other potentially significant sources of combustion air contaminants. Oxides of nitrogen are direct participants in photochemical smog reactions. The emitted compound, nitric oxide, combines with oxygen in the atmosphere in the presence of hydrocarbons and sunlight to form nitrogen dioxide and ozone. Nitrogen dioxide, the most significant of the nitrogen oxide pollutants, can color the atmosphere at concentrations as low as 0.5 parts per million on days of ten mile visibility. Nitrogen oxide is a significant air pollutant in the region as a precursor to photochemical smog but it also reacts in the air to form nitrate particulates.

Motor vehicles are the major source of reactive hydrocarbons in the basin. Other sources include evaporation of organic vapors from solvents, paints, coatings, fugitive gas leaks in connectors, valves or seals associated with petroleum production, refining, storage, dispensing, and transportation. Certain hydrocarbons can damage plants by inhibiting growth and by causing flowers and leaves to fall. Levels of hydrocarbons currently measured in urban areas are not known to cause adverse effects in humans. However, certain members of this contaminant group are important components in the reactions, which produce photochemical oxidants.

Table 4-3 shows that the Federal or State nitrogen dioxide standards have not been exceeded at the Santa Maria monitoring station during the three-year period from 2012 through 2014. Hydrocarbons are not currently monitored.

Sulfur Dioxide

Santa Barbara County has been designated as an attainment area for the National Ambient Air Quality Standards for sulfur dioxide. Sulfur dioxide is the primary combustion product of sulfur, or sulfur containing fuels. Fuel combustion is the major source of this pollutant, while chemical plants, sulfur recovery plants, and metal processing facilities are minor contributors. Gaseous fuels (natural gas, propane, etc.) typically have lower percentages of sulfur containing compounds than liquid fuels such as diesel or crude oil. Sulfur dioxide levels are generally

higher in the winter months. Decreasing levels of sulfur dioxide in the atmosphere reflect the use of natural gas in power plants and boilers.

At high concentrations, sulfur dioxide irritates the upper respiratory tract. At lower concentrations, when respirated in combination with particulates, sulfur dioxide can result in greater harm by injuring lung tissues. Sulfur oxides, in combination with moisture and oxygen, results in the formation of sulfuric acid, which can yellow the leaves of plants, dissolve marble, and oxidize iron and steel. Sulfur oxides can also react to produce sulfates that reduce visibility and sunlight.

Table 4-3 shows data for only 2012 and 2013 in Lompoc.

Lead and Suspended Sulfate

Ambient lead levels have dropped dramatically since California prohibited lead gasoline additives in 1982. Historic ambient lead levels in Santa Barbara County are well below the ambient standard and are expected to continue to decline. Suspended lead levels have stabilized to the point where no excesses of the State standard are expected in any given year.

Hazardous Air Pollutants

Hazardous Air Pollutants are materials that are known or suspected to cause cancer, genetic mutations, birth defects, or other serious illnesses in humans. Hazardous Air Pollutants may be emitted from three main source categories: 1) industrial facilities; 2) internal combustion engines (stationary and mobile); and 3) small "area sources" (such as solvent use). The California Air Resources Board publishes lists of Volatile Organic Compound Species Profiles for many industrial applications and substances (California Air Resources Board 2006a). Generally, Hazardous Air Pollutants behave in the atmosphere in the same general way as inert pollutants (those that do not react chemically, but preserve the same chemical composition from point of emission to point of impact). The concentrations of toxic pollutants are therefore determined by the quantity and concentration emitted at the source and the meteorological conditions encountered as the pollutants are transported away from the source. Thus, impacts from toxic pollutant emissions tend to be site-specific and their intensity is subject to constantly changing meteorological conditions. The worst-case meteorological conditions that negatively affect short-term impacts are low wind speeds, highly stable air mass, and constant wind direction.

Odorous Compounds

Several compounds associated with the oil and gas industry can produce odors that can be determined to be nuisances. Sulfur compounds, found in oil and gas, have very low odor threshold levels. For instance, hydrogen sulfide can be detected by two percent of the human population at concentrations as low as 0.5 parts per billion. Concentrations of 40 parts per billion typically qualify as annoying to 50 percent of the population. These levels are significantly lower than concentrations that could affect human health: two parts per million [2,000 parts per billion] can cause headaches and increased airway resistance in asthmatics. Inhalation of more

than 600 parts per million can be instantly lethal and inhalation of over 100 parts per million can be lethal if exposed to for more than 60 minutes [ERPG-3].

Many volatile compounds found in oil and gas (ethane and longer chain hydrocarbons) typically have petroleum or gasoline odor with various odor thresholds. Natural gas contains mostly methane (which is odorless), and, by law, must be odorized before being placed into a distribution pipeline. The various odorizing compounds used contain sulfur compounds having a very low odor threshold and can produce odors if released into the atmosphere.

GREENHOUSE GASES

Greenhouse gases are defined as any gas that absorbs infrared radiation (heat) in the earth's atmosphere, including water vapor, carbon dioxide, methane, nitrous oxide and fluorocarbons. In general, most greenhouse gasses do not have a localized effect, but rather contribute to ambient concentrations that contribute to "global" climate effects.

Greenhouse gases lead to the trapping and buildup of heat in the atmosphere near the earth's surface, commonly known as the "greenhouse effect". The accumulation of greenhouse gases in the atmosphere influences the earth's temperature. Greenhouse gases are vital to life on Earth; without them Earth would be an icy planet (California Air Resources Board 2006). Emissions from human activities, such as the burning of fossil fuels, have elevated the concentration of these gases in the atmosphere. A warming trend of about 0.7 degrees Fahrenheit to 1.5 degrees Fahrenheit reportedly occurred during the 20th century, and a number of scientific analyses indicate that rising levels of greenhouse gases in the atmosphere may be contributing to climate change (Environmental Protection Agency 2000).

If the average temperature of the Earth increases significantly, some scientists predict that weather may be affected, including changes in precipitation patterns, accumulation of snow pack, and intensity and duration of spring snowmelt. There may be rises in sea level, resulting in coastal erosion and inundation of coastal areas. Emissions of air pollutants and ambient levels of pollutants also may be affected in areas. Climate zones may change, affecting the ecology and biological resources of a region. There may be changes in fire hazards due to the changes in precipitation and climate zones.

Greenhouse gases have varying global warming potential. The global warming potential is the potential of a gas or aerosol to trap heat in the atmosphere. Because greenhouse gases absorb different amounts of heat, a common reference gas (carbon dioxide) is used to relate the amount of heat absorbed to the amount of the gas emissions, referred to as the "carbon dioxide equivalent". This is the amount of greenhouse gases emitted multiplied by the global warming potential. The global warming potential of carbon dioxide is defined as one, whereas the global warming potential of methane, for example, is 21, meaning that methane gas absorbs 21 times as much heat, and therefore has 21 times greater impact on global warming per pound of emissions, as carbon dioxide.

Carbon dioxide is an odorless, colorless greenhouse gas. Natural sources of carbon dioxide include decomposition of dead organic matter; respiration of bacteria, plants, animals, and fungus; evaporation from oceans; and volcanic outgassing. Anthropogenic (human caused)

sources of carbon dioxide include burning fuels, such as coal, oil, natural gas, and wood. Average atmospheric carbon dioxide concentrations were 398.55 parts per million during 2014 (National Oceanic and Atmospheric Administration, 2015). However, some believe that concentrations may increase to 540 parts per million by 2100 as a direct result of anthropogenic sources and result in an average global temperature rise of at least two degrees Celsius (3.6 degrees Fahrenheit) (IPCC 2007).

Methane gas is the main component of natural gas used in homes. As discussed above, it has a global warming potential of about 21. Natural sources of methane arise from the decay of organic matter. Decayed organic matter trapped in geological deposits can be extracted as natural gas, which is used for fuel. Other sources of decaying organic material that are sometimes also used as fuel include landfills, sewage treatment plants, and animal manure.

Nitrous oxide is a colorless gas with a global warming potential of about 310 that is produced by microbial processes in soil and water, including those reactions which occur in fertilizer containing nitrogen. In addition to agricultural sources, some industrial processes (nylon production, nitric acid production) also emit nitrogen dioxide. It is used in rocket engines, as an aerosol spray propellant, and in race cars. During combustion, nitrogen oxide (nitrogen oxides is a generic term for mono-nitrogen oxides, nitric oxide and nitrogen dioxide) is produced as a criterion pollutant (see above), and is not the same as nitrous oxide. Very small quantities of nitrous oxide may be formed during fuel combustion by reaction of nitrogen and oxygen (API 2004).

Chlorofluorocarbons are gases formed synthetically by replacing all hydrogen atoms in methane or ethane with either chlorine and/or fluorine atoms. Chlorofluorocarbons are nontoxic, nonflammable, insoluble, and chemically nonreactive in the troposphere (the level of air at the earth's surface). Chlorofluorocarbons were first synthesized in 1928 for use as refrigerants, aerosol propellants, and cleaning solvents. They destroy stratospheric ozone; therefore their production was stopped as required by the Montreal Protocol. Hydrofluorocarbons are synthetic man-made chemicals that are used as a substitute for Chlorofluorocarbons in automobile air conditioners and refrigerants. Perfluorocarbons are used in aluminum production and semiconductor manufacture industry In general, fluorocarbons have a global warming potential of between 140 and 11,700.

Sulfur hexafluoride is an inorganic, odorless, colorless, nontoxic, nonflammable gas. It also has the highest global warming potential of any gas at 23,900. Sulfur hexafluoride is used for insulation in electric power transmission and distribution equipment, in the magnesium industry, in semiconductor manufacturing, and as a tracer gas for leak detection.

Ozone is a greenhouse gas; however, unlike the other greenhouse gases, ozone in the troposphere is relatively short-lived and therefore is not global in nature. According to California Air Resources Board, it is difficult to make an accurate determination of the contribution of ozone precursors (nitrogen oxides and volatile organic compounds) to global warming (California Air Resources Board 2006b).

Table 4-4 shows a range of gasses that contribute to greenhouse gas warming with their associated global warming potential.

Table 4-4 - Global Warming Potential of Various Gases

Gas	20-Year Global Warming Potential (average)
Carbon Dioxide	1
Methane	21
Nitrous Oxide	310
HFC-23	11,700
HFC-32	650
HFC-125	2,800
HFC-134a	1,300
HFC-143a	3,800
HFC-152a	140
HFC-227ea	2,900
HFC-236fa	6,300
HFC-4310mee	1,300
CF4	6,500
C2F6	9,200
C4F10	7,000
C6F14	7,400
SF6	23,900

Source: Environmental Protection Agency 2014

Fossil fuel combustion represents the vast majority of the anthropogenic greenhouse gas emissions, with carbon dioxide being the primary greenhouse gas. The total U.S. greenhouse gas emissions were 7,260 million metric tons of carbon equivalents in 2005, of which 84 percent were carbon dioxide emissions (Environmental Protection Agency 2014).

California greenhouse gas emissions would rank 16th largest in the world. In 2012, California produced 459 million metric tons of carbon dioxide equivalent greenhouse gas emissions; this is a decrease of 1.6 percent from 2000 emissions (California Air Resources Board 2014b). The transportation sector is the single largest category of California's greenhouse gas emissions, producing approximately 40 percent of the State's total greenhouse gas emissions in 2012. Electrical generation produced approximately 24 percent of greenhouse gas emissions. Most of California's emissions, 80 percent, are carbon dioxide produced from fossil fuel combustion (California Air Resources Board 2014b).

Countywide Greenhouse Gas Emissions

The Santa Barbara County Climate Action Strategy (2011) was developed to address greenhouse gas emissions pursuant to the Santa Barbara County Board of Supervisors' March 2009 direction (Board of Supervisors Resolution 09-059) "to take immediate, cost effective, and coordinated steps to reduce the County's collective greenhouse gas emissions." Phase 1 was the preparation of a Climate Action Study, and Phase 2 is the development of a Climate Action Plan. The Study included: a greenhouse gas inventory and forecast for the unincorporated County; a discussion of greenhouse gas emission reduction target options that the County could pursue; a list of current County activities which reduce greenhouse gas emissions; evaluation of potential additional emission reduction measures the County could implement; and recommendations for implementation of the Study through an Energy and Climate Action Plan Summary Information (Santa Barbara County 2013).

The Energy and Climate Action Plan was adopted in May 2015 and seeks to reduce Santa Barbara County's greenhouse gas emissions through implementation of emission reduction measures with the goal of achieving a greenhouse gas reduction target of 15 percent below baseline emissions by the year 2020. The Energy and Climate Action Plan serves as a qualified greenhouse gas reduction strategy consistent with the California Environmental Quality Act (Santa Barbara County 2015).

Figure 4-1 depicts Santa Barbara County's 2007 greenhouse gas emissions inventory by sector; total greenhouse gas emissions were estimated at approximately 1.19 million tonnes in 2007 (Santa Barbara County 2015).

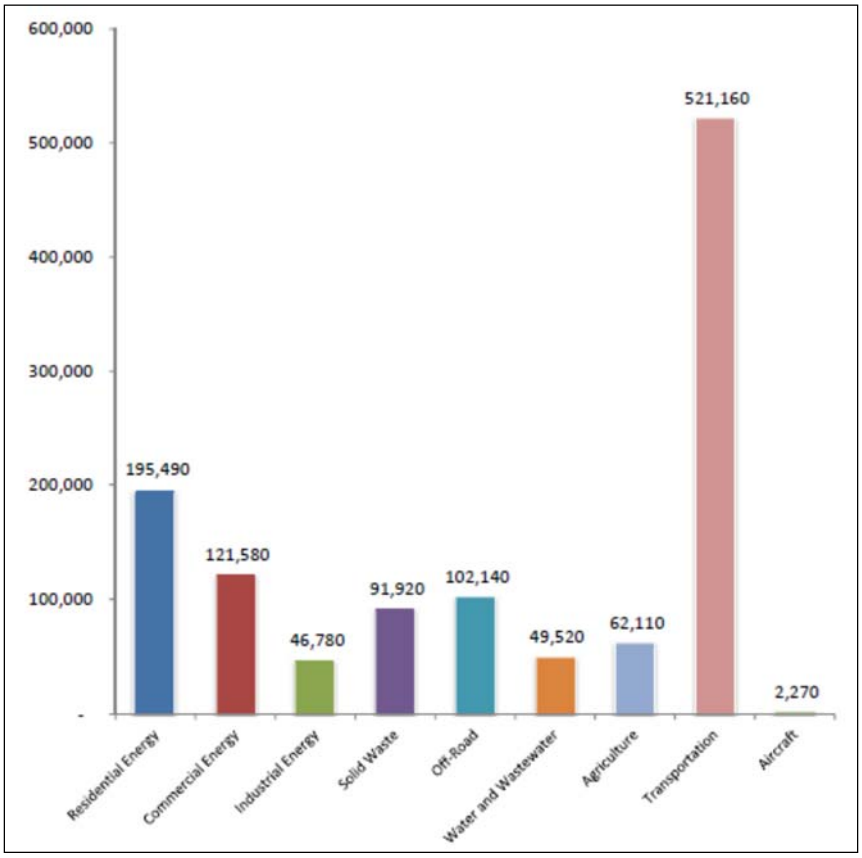

Source: Santa Barbara County 2015

Figure 4-1 - 2007 Unincorporated Santa Barbara County Greenhouse Gas Emissions by Sector

Calculation of Greenhouse Gas Emissions

The quantification of greenhouse gas emissions associated with a Project can be complex and relies on a number of assumptions. Greenhouse gas emissions impacts are global, not local. Emissions are generally classified as either direct or indirect emissions are produced at the Project site. These would include the combustion of natural gas in heaters or stoves, the combustion of fuel in engines and construction vehicles, and fugitive emissions from valves, seals, and connectors. Indirect emissions are emissions created as part of the Project, but created outside of the Project site, including electrical power purchased from the grid, and transportation used to bring goods and materials to the Project site.

This report utilizes the California Climate Action Registry General Reporting Protocol (California Climate Action Registry 2009), the California Air Resources Board Compendium of Emission Factors and Methods to Support Mandatory Reporting of Greenhouse Gas Emissions (California Air Resources Board 2007), EMFAC2014, and California Emissions Estimator Model as methods to calculate greenhouse gas emissions. Indirect greenhouse gas emissions associated with trash hauling and other transportation services are included in the total diesel truck emissions.

COUNTYWIDE CRITERIA POLLUTANT EMISSION INVENTORY

California Air Resources Board maintains emissions inventories for criteria air pollutants for stationary, area-wide, mobile and natural emissions sources. **Table 4-5** presents the California Air Resources Board data for 2012 within Santa Barbara County. Stationary sources include power plants, refineries and manufacturing facilities. Area-wide sources are estimated from consumer products, fireplaces, road dust and agricultural operations. Mobile sources account for on-road (automobiles, motorcycles and trucks) and off-road vehicle (off-road engines and equipment, recreational vehicles, farm and construction equipment, locomotives, and marine vessels) operations. Natural sources are non-manmade emissions sources, including biological and geological sources, wildfires, windblown dust and biogenic emissions. Mobile sources account for 40 percent of carbon monoxide emissions and 92 percent of nitrogen oxide emissions. Natural sources, which include natural uncontrolled seeps of oil and gas constituents, account for 55 percent of carbon monoxide emissions and 84 percent of reactive organic gas emissions (California Air Resources Board 2014a).

Table 4-5 - 2012 Emission Inventory for Santa Barbara County

Emission Sources	Carbon Monoxide Tons/Year	Reactive Organic Gas Tons/Year	Nitrogen Oxide Tons/Year	Sulfur Oxides Tons/Year	Particulate Matter (PM_{10}) Tons/Year	Particulate Matter ($PM_{2.5}$) Tons/Year
Stationary	2,811	3,431	1,606	329	329	146
Area-wide	2,519	3,176	329	0	3,942	840
Mobile	39,712	4,125	28,506	4,453	1,351	1,168
Natural	55,298	57,086	694	401	5,439	4,599
All Sources	100,340	67,818	31,135	5,183	11,061	6,653

Source: California Air Resources Board 2014a

COUNTYWIDE AIR TOXICS

Air toxics are materials that are known or suspected to cause cancer, genetic mutations, birth defects, or other serious illnesses in humans. Air toxics may be emitted from three main source categories: 1) industrial facilities; 2) internal combustion engines (mobile and stationary); and 3) small area sources (such as solvent use). California Air Resources Board publishes lists of Volatile Organic Compound Species Profiles for many industrial applications and substances (California Air Resources Board 2013).

Generally, air toxics behave in the atmosphere in the same general way as inert pollutants (those that do not react chemically, but preserve the same chemical composition from point of emission to point of impact). The concentrations of toxic pollutants are therefore determined by the quantity and concentration emitted at the source and the meteorological conditions encountered

as the pollutants are transported away from the source. Thus, impacts from toxic pollutant emissions tend to be site-specific and their intensity is subject to constantly changing meteorological conditions. The worst-case meteorological conditions that negatively affect short-term impacts are low wind speeds, highly stable air mass, and constant wind direction.

5.0 PROJECT-IMPACT ANALYSIS FOR CRITERIA POLLUTANTS

This Air Quality Impact Analysis was prepared pursuant to the Santa Barbara County Air Pollution Control District's Environmental Review Guidelines (Santa Barbara County Air Pollution Control District 1995, revised 2000), Santa Barbara County Air Pollution Control District's Scope and Content of Air Quality Sections in Environmental Documents (2014), the Santa Barbara County's Environmental Thresholds and Guidelines Manual (2008), the California Environmental Quality Act (Public Resources Code 21000 to 21177) and California Environmental Quality Act Guidelines (California Code of Regulations Title 14, Division 6, Chapter 3, Sections 15000 – 15387).

5.1 IMPACT AQ-1: SHORT-TERM CONSTRUCTION EMISSIONS

Short-term emissions will be produced from the Project's Phase I and Phase II construction and drilling activities and are recognized to be short in duration and without lasting impacts on air quality.

Equipment Exhaust

California Emissions Estimator Model was used to estimate short-term emissions from construction equipment using a specific list and schedule. The construction plan provided by the applicant detailed the various types and quantity of each type of equipment used per month; therefore, it was assumed that if a piece of equipment was active during a particular month then it will operate the full ten hours per day for each construction day in that month. Construction days per month were based on the construction schedule of six days per week. The drilling plan provided drilling equipment and operating hours per month and year. The annual operating hours were divided by annual working days to obtain the hours per day per piece of equipment. If the hours per day exceeded 24 hours then two pieces of that equipment type were assumed. Specific equipment horsepower was used where available and default load factors from California Emissions Estimator Model were utilized. Detailed equipment listings are provided in **Attachment A**.

Fugitive Dust

California Emissions Estimator Model was used to estimate short-term fugitive dust emissions from grading, cut and fills, and unpaved road vehicle travel. The area of disturbance for grading (**Table 5-1**) and cut and fill volumes (**Table 5-1**) were provided by the Project applicant and input into California Emissions Estimator Model. The distance of unpaved road travel during construction (**Tables 5-2 and 5-3**) was estimated based on aerial photos and multiplied by the estimated trips.

Table 5-1 - Grading Area and Cut and Fill Volumes by Year

Year	Grading Area (acres/year)	Fill Volumes (cubic yards)	Cut Volumes (cubic yards)
2017	50.53	266,903	521,238
2018	42.41	310,882	435,779
2019	59.80	768,987	284,010
2020	10.59	35,804	121,268
2024	81.06	975,163	1,444,936
2026	2.50	13,724	6,276
2029	3.00	0	42,099
2030	3.52	13,573	25,199
2031	10.88	207,038	78,439
2034	4.72	17,828	11,997
2035	36.04	501,266	177,032

Table 5-2 - Construction Vehicles Travel Distance by Year

Year	Vehicle Type	Unpaved Travel Distance (miles/year)	Paved Travel Distance (miles/year)
Project Construction Activities			
2017	Autos	2,847.0	153,738.0
2017	Trucks	126.6	6,836.4
2018	Autos	25,193.4	1,360,443.6
2018	Trucks	726.6	69,833.4
2019	Autos	42,336.6	2,286,176.4
2019	Trucks	442.2	76,278.0
2020	Autos	3,032.4	163,749.6
2020	Trucks	4.8	1,233.6
2021	Autos	2,896.8	156,427.2
2021	Trucks	4.8	1,233.6
2022	Autos	1,039.2	56,116.8
2022	Trucks	3.0	771.0
2023	Autos	15,054.0	812,916.0
2023	Trucks	282.0	36,125.8
2024	Autos	21,332.4	1,151,949.6
2024	Trucks	345.6	55,637.8
2025	Autos	187.2	10,108.8
2025	Trucks	1.2	308.4
2026	Autos	979.2	52,876.8
2026	Trucks	0.6	154.2
2028	Autos	937.8	50,641.2
2028	Trucks	1.2	308.4
2029	Autos	531.6	28,706.4

Year	Vehicle Type	Unpaved Travel Distance (miles/year)	Paved Travel Distance (miles/year)
2029	Trucks	1.2	308.4
2030	Autos	1,568.4	84,693.6
2030	Trucks	1.2	308.4
2031	Autos	1,780.2	96,130.8
2031	Trucks	1.2	308.4
2032	Autos	480.6	25,952.4
2032	Trucks	0.6	154.2
2033	Autos	93.6	5,054.4
2034	Autos	601.2	32,464.8
2035	Autos	4,507.8	243,421.2
2035	Trucks	3.0	771.0
2036	Autos	93.6	5,054.4
2037	Autos	93.6	5,054.4
14-Mile Fuel Line Construction Activities			
2018	Autos	9,034.8	487,879.2
2018	Trucks	40.2	10,331.4
115KV Interconnect and Substation Construction Activities			
2017	Autos	733.2	39,592.8

Table 5-3 - Drilling Vehicles Travel Distance by Year

Year	Vehicle Type	Unpaved Travel Distance (miles/year)	Paved Travel Distance (miles/year)
2018	Unpaved Roads Autos	1,466.4	79,185.6
2018	Unpaved Roads Trucks	36.6	8,066.4
2019	Unpaved Roads Autos	8,826.6	476,636.4
2019	Unpaved Roads Trucks	619.2	135,018.0
2021	Unpaved Roads Autos	733.2	39,592.8
2021	Unpaved Roads Trucks	13.8	2,937.6
2022	Unpaved Roads Autos	733.2	39,592.8
2022	Unpaved Roads Trucks	13.8	2,937.6
2023	Unpaved Roads Autos	733.2	39,592.8
2023	Unpaved Roads Trucks	13.8	2,937.6
2024	Unpaved Roads Autos	8,854.8	478,159.2
2024	Unpaved Roads Trucks	643.2	140,089.8
2025	Unpaved Roads Autos	1,494.6	80,708.4
2025	Unpaved Roads Trucks	28.8	6,427.2
2026	Unpaved Roads Autos	3,722.4	201,009.6
2026	Unpaved Roads Trucks	108	23,614.8
2027	Unpaved Roads Autos	1,466.4	79,185.6
2027	Unpaved Roads Trucks	42.6	9,243.0

Year	Vehicle Type	Unpaved Travel Distance (miles/year)	Paved Travel Distance (miles/year)
2028	Unpaved Roads Autos	1,466.4	79,185.6
2028	Unpaved Roads Trucks	36.6	8,066.4
2029	Unpaved Roads Autos	2961	159,894.0
2029	Unpaved Roads Trucks	99	21,667.2
2030	Unpaved Roads Autos	4,455.6	240,602.4
2030	Unpaved Roads Trucks	151.8	33,166.2
2031	Unpaved Roads Autos	2,989.2	161,416.8
2031	Unpaved Roads Trucks	103.2	22,503.0
2032	Unpaved Roads Autos	3,666	197,964.0
2032	Unpaved Roads Trucks	112.2	24,450.6
2033	Unpaved Roads Autos	1,466.4	79,185.6
2033	Unpaved Roads Trucks	36.6	8,066.4
2034	Unpaved Roads Autos	3,694.2	199,486.8
2034	Unpaved Roads Trucks	126	27,388.2
2035	Unpaved Roads Autos	8,093.4	437,043.6
2035	Unpaved Roads Trucks	252	54,898.2
2036	Unpaved Roads Autos	1,494.6	80,708.4
2036	Unpaved Roads Trucks	49.8	10,849.8
2037	Unpaved Roads Autos	1,494.6	80,708.4
2037	Unpaved Roads Trucks	49.8	10,849.8
2038	Unpaved Roads Autos	1,466.4	79,185.6
2038	Unpaved Roads Trucks	49.8	10,849.8
2039	Unpaved Roads Autos	1,438.2	77,662.8
2039	Unpaved Roads Trucks	49.8	10,849.8
2040	Unpaved Roads Autos	1,466.4	79,185.6
2040	Unpaved Roads Trucks	49.8	10,849.8
2041	Unpaved Roads Autos	1,466.4	79,185.6
2041	Unpaved Roads Trucks	49.8	10,849.8
2042	Unpaved Roads Autos	1,494.6	80,708.4
2042	Unpaved Roads Trucks	49.8	10,849.8
2043	Unpaved Roads Autos	1,494.6	80,708.4
2043	Unpaved Roads Trucks	49.8	10,849.8
2044	Unpaved Roads Autos	1,466.4	79,185.6
2044	Unpaved Roads Trucks	49.8	10,849.8
2045	Unpaved Roads Autos	1,466.4	79,185.6
2045	Unpaved Roads Trucks	49.8	10,849.8
2046	Unpaved Roads Autos	1,466.4	79,185.6
2046	Unpaved Roads Trucks	49.8	10,849.8
2047	Unpaved Roads Autos	1,466.4	79,185.6
2047	Unpaved Roads Trucks	49.8	10,849.8

Year	Vehicle Type	Unpaved Travel Distance (miles/year)	Paved Travel Distance (miles/year)
2048	Unpaved Roads Autos	1,494.6	80,708.4
2048	Unpaved Roads Trucks	49.8	10,849.8
2049	Unpaved Roads Autos	1,466.4	79,185.6
2049	Unpaved Roads Trucks	49.8	10,849.8

Offsite Mobile Exhaust

EMFAC2014 emission factors were used to estimate short-term emissions from employee's travel, equipment deliveries and material deliveries. Employees were assumed to travel an estimated roundtrip distance of 32.4 miles. Equipment and material deliveries were estimated to originate from Santa Maria, Bakersfield, and out of state (entering California along Highway 40) with round trip distances of 32.4, 276, and 808 miles respectively. Some deliveries will originate from both Santa Maria and Bakersfield; therefore, an average round trip distance of 154.2 miles was used. Employee's vehicles were assumed to be gasoline fueled light duty auto and delivery vehicles were assumed to be diesel heavy-heavy duty T7 Construction Tractors. All vehicle trips were assumed to use a trip speed of 55 miles per hour. The construction and drilling trips were estimated using the Project applicants detailed schedules. **Tables 5-1, 5-2, and 5-3** above summarize the distance traveled by construction employees and equipment and delivery trucks.

Short-Term Emissions

Tables 5-4 through 5-8 below summarize the short-term unmitigated emissions calculated for this Project. Calculation and summary spreadsheets are available in **Attachment A**. The output from California Emissions Estimator Model runs are available in **Attachment B.**

Table 5-4 - Project Short Term Unmitigated Construction Emissions – By Year

Year	Total Emissions						
	ROC (tons/yr)	CO (tons/yr)	NOx (tons/yr)	SOx (tons/yr)	PM_{10} (tons/yr)	$PM_{2.5}$ (tons/yr)	CO_2e (MT/yr)
2017	1.89	9.64	23.78	0.02	3.06	1.09	2,246.65
2018	3.85	21.71	37.78	0.04	18.94	3.32	4,489.95
2019	5.47	32.26	50.06	0.06	30.81	5.10	6,055.54
2020	0.75	4.35	8.12	0.01	2.38	0.52	932.80
2021	0.66	4.12	7.06	0.01	2.22	0.47	879.19
2022	0.28	1.64	3.10	0.01	0.81	0.18	462.62
2023	1.12	8.82	9.49	0.02	10.56	1.40	1,782.39
2024	3.42	25.37	31.65	0.06	15.85	2.68	5,809.29
2025	0.01	0.06	0.10	0.00	0.13	0.02	19.28
2026	0.26	2.06	2.36	0.01	0.75	0.16	468.34
2027	0.00	0.00	0.00	0.00	0.00	0.00	0.00
2028	0.22	1.50	2.13	0.00	0.71	0.14	450.33
2029	0.11	0.79	1.01	0.00	0.40	0.07	177.00
2030	0.27	2.16	1.07	0.01	1.08	0.14	610.48
2031	0.36	2.59	1.43	0.01	1.25	0.17	808.61
2032	0.11	0.98	0.45	0.00	0.33	0.04	232.49

Year	Total Emissions						
	ROC (tons/yr)	CO (tons/yr)	NOx (tons/yr)	SOx (tons/yr)	PM_{10} (tons/yr)	$PM_{2.5}$ (tons/yr)	CO_2e (MT/yr)
2033	0.00	0.02	0.01	0.00	0.06	0.01	10.68
2034	0.23	1.51	0.93	0.01	0.44	0.07	503.11
2035	0.71	5.86	2.23	0.02	3.12	0.37	1,805.79
2036	0.00	0.02	0.01	0.00	0.06	0.01	10.65
2037	0.00	0.02	0.01	0.00	0.06	0.01	10.65

Definitions:
CO = carbon monoxide
NOx= nitrogen oxide
PM_{10} = particulate matter of 10 microns
$PM_{2.5}$ = particulate matter of less than 2.5 microns
ROC = reactive organic compound
SOx = sulfur oxide
CO_2e = carbon dioxide equivalent
MT = metric ton

Table 5-5 - 14-Mile Fuel Line Unmitigated Construction Emissions – By Year

Year	Total Emissions						
	ROC (tons/yr)	CO (tons/yr)	NOx (tons/yr)	SOx (tons/yr)	PM10 (tons/yr)	PM2.5 (tons/yr)	CO2e (MT/yr)
2018	3.46	24.44	36.67	0.04	7.81	2.28	4,049.89

Definitions:
CO = carbon monoxide
NOx= nitrogen oxide
PM_{10} = particulate matter of 10 microns
$PM_{2.5}$ = particulate matter of less than 2.5 microns
ROC = reactive organic compound
SOx = sulfur oxide
CO_2e = carbon dioxide equivalent
MT = metric ton

Table 5-6 - 115KV Interconnect and Substation Unmitigated Construction Emissions – By Year

Year	Total Emissions						
	ROC (tons/yr)	CO (tons/yr)	NOx (tons/yr)	SOx (tons/yr)	PM_{10} (tons/yr)	$PM_{2.5}$ (tons/yr)	CO_2e (MT/yr)
2017	0.13	0.76	1.09	0.00	0.55	0.11	106.81

Definitions:
CO = carbon monoxide
NOx= nitrogen oxide
PM_{10} = particulate matter of 10 microns
$PM_{2.5}$ = particulate matter of less than 2.5 microns
ROC = reactive organic compound
SOx = sulfur oxide
CO_2e = carbon dioxide equivalent
MT = metric ton

Table 5-7 - Drilling Short Term Unmitigated Construction Emissions – By Year

Year	Total Emissions						
	ROC (tons/yr)	CO (tons/yr)	NOx (tons/yr)	SOx (tons/yr)	PM_{10} (tons/yr)	$PM_{2.5}$ (tons/yr)	CO_2e (MT/yr)
2017	0.00	0.00	0.00	0.00	0.00	0.00	0.00
2018	0.23	1.20	2.57	0.00	1.08	0.18	538.28
2019	3.40	18.48	36.25	0.08	7.37	1.72	8,378.02
2020	0.00	0.00	0.00	0.00	0.00	0.00	0.00
2021	0.07	0.44	0.08	0.00	0.52	0.07	201.93
2022	0.07	0.46	0.62	0.00	0.51	0.07	214.90
2023	0.07	0.45	0.55	0.00	0.51	0.07	214.51
2024	2.71	18.32	20.58	0.08	6.92	1.26	8,835.31
2025	0.11	0.83	0.80	0.00	1.03	0.12	402.48

Year	Total Emissions						
	ROC (tons/yr)	**CO** (tons/yr)	**NOx** (tons/yr)	**SOx** (tons/yr)	**PM_{10}** (tons/yr)	**$PM_{2.5}$** (tons/yr)	**CO_2e** (MT/yr)
2026	0.44	3.12	3.07	0.01	2.63	0.34	1,510.81
2027	0.18	1.25	1.24	0.01	1.04	0.14	605.87
2028	0.15	1.07	1.05	0.00	1.03	0.13	516.68
2029	0.40	2.84	2.82	0.01	2.11	0.29	1,379.02
2030	0.52	4.22	2.01	0.02	3.11	0.37	2,199.53
2031	0.35	2.87	1.37	0.01	2.09	0.25	1,499.71
2032	0.39	3.15	1.50	0.02	2.54	0.30	1,642.81
2033	0.13	1.04	0.49	0.01	1.01	0.11	540.29
2034	0.44	3.55	1.69	0.02	2.58	0.30	1,851.74
2035	0.88	7.67	2.59	0.04	5.61	0.63	4,011.19
2036	0.17	1.44	0.49	0.01	1.04	0.12	750.21
2037	0.17	1.44	0.49	0.01	1.04	0.12	750.07
2038	0.17	1.44	0.49	0.01	1.02	0.12	749.67
2039	0.17	1.43	0.49	0.01	1.00	0.11	749.30
2040	0.16	1.43	0.42	0.01	1.02	0.11	749.51
2041	0.16	1.43	0.42	0.01	1.02	0.11	749.45
2042	0.16	1.43	0.42	0.01	1.04	0.11	749.69
2043	0.16	1.43	0.42	0.01	1.04	0.11	749.65
2044	0.16	1.43	0.42	0.01	1.02	0.11	749.35
2045	0.16	1.43	0.42	0.01	1.02	0.11	749.32
2046	0.16	1.43	0.42	0.01	1.02	0.11	749.31
2047	0.16	1.43	0.42	0.01	1.02	0.11	749.29
2048	0.16	1.43	0.42	0.01	1.04	0.11	749.56
2049	0.16	1.43	0.42	0.01	1.02	0.11	749.27

Definitions:

CO =	carbon monoxide	ROC =	reactive organic compound
NOx=	nitrogen oxide	SOx =	sulfur oxide
PM_{10} =	particulate matter of 10 microns	CO_2e =	carbon dioxide equivalent
$PM_{2.5}$ =	particulate matter of less than 2.5 microns	MT =	metric ton

Table 5-8 - Short Term Unmitigated Construction Emissions – Peak Year

Activity	Total Emissions[1]						
	ROC (tons/yr)	**CO** (tons/yr)	**NOx** (tons/yr)	**SOx** (tons/yr)	**PM_{10}** (tons/yr)	**$PM_{2.5}$** (tons/yr)	**CO_2e** (MT/yr)
Construction Equipment Exhaust	5.42	31.73	49.19	0.06	2.39	2.23	5,460.8
Construction Offsite Mobile Exhaust	0.06	0.53	0.87	0.00	0.04	0.04	348.5
Construction Fugitive Dust	-	-	-	-	28.42	2.84	-
Drilling Equipment Exhaust	3.39	18.12	35.58	0.08	1.11	1.09	8,526.7
Drilling Offsite Mobile Exhaust	0.02	0.36	0.67	0.00	0.005	0.005	308.6
Drilling Fugitive Dust	-	-	-	-	6.247	0.624	-
Peak Year Total[2]	8.88	50.74	86.31	0.15	38.21	6.83	16,644.6
Significance Thresholds	25	NA	25	25	25	25	1,000
Significant?	No	No	Yes	No	Yes	No	Yes

Definitions:

CO =	carbon monoxide	ROC =	reactive organic compound
NOx=	nitrogen oxide	SOx =	sulfur oxide
PM_{10} =	particulate matter of 10 microns	CO_2e =	carbon dioxide equivalent
$PM_{2.5}$ =	particulate matter of less than 2.5 microns	MT =	metric ton

Activity	Total Emissions[1]						
	ROC (tons/yr)	**CO** (tons/yr)	**NOx** (tons/yr)	**SOx** (tons/yr)	**PM_{10}** (tons/yr)	**$PM_{2.5}$** (tons/yr)	**CO_2e** (MT/yr)

Notes:
1. Peak Year is 2019 except for carbon dioxide equivalent which peak year is 2024.
2. Numbers may not add exactly due to rounding.

As calculated with California Emissions Estimator Model and EMFAC2014, using the anticipated equipment listings, the short-term unmitigated emissions are predicted to *exceed* the County of Santa Barbara's significance threshold levels for nitrogen oxides, particulate matter of 10 microns and carbon dioxide equivalences. Dust control mitigation measures are required under the Santa Barbara County's Grading Ordinance for most projects. Mitigation Measures AQ-1a and AQ-1b below are required for all projects involving earthmoving activities regardless of the project size or duration. The measures are based on policies adopted in the 1979 Air Quality Attainment Plan for Santa Barbara County. Mitigation Measure AQ-1c is additionally required to ensure construction emissions are reduced below a level of significance for nitrogen oxides. As shown in **Table 5-13**, with implementation of Mitigation Measures AQ-1a, AQ-1b and AQ-1c, all potential short-term emissions would be reduced to a less than significant level with the exception of carbon dioxide equivalent emissions. Greenhouse Gas emissions and mitigation measures are further discussed in **Section 7.0**.

Tables 5-9 through 5-13 below summarize the short term mitigated emissions calculated for this Project.

Table 5-9 - Project Short Term Mitigated Construction Emissions – By Year

Year	Total Emissions						
	ROC (tons/yr)	**CO** (tons/yr)	**NOx** (tons/yr)	**SOx** (tons/yr)	**PM_{10}** (tons/yr)	**$PM_{2.5}$** (tons/yr)	**CO_2e** (MT/yr)
2017	0.29	11.59	1.30	0.02	0.56	0.09	2,246.65
2018	0.63	23.76	6.16	0.04	4.20	0.49	4,489.94
2019	0.89	34.33	9.79	0.06	6.92	0.81	6,055.54
2020	0.13	5.41	0.82	0.01	0.51	0.07	932.80
2021	0.12	5.20	0.81	0.01	0.47	0.06	879.19
2022	0.06	2.46	0.28	0.01	0.17	0.02	462.62
2023	0.25	10.03	2.64	0.02	2.45	0.27	1,782.39
2024	0.82	33.07	6.44	0.06	3.69	0.45	5,809.28
2025	0.00	0.09	0.01	0.00	0.03	0.00	19.28
2026	0.07	2.81	0.46	0.01	0.16	0.02	468.34
2027	0.00	0.00	0.00	0.00	0.00	0.00	0.00
2028	0.06	2.40	0.27	0.00	0.16	0.02	450.33
2029	0.03	1.03	0.20	0.00	0.09	0.01	177.00
2030	0.07	3.11	0.52	0.01	0.26	0.03	610.48
2031	0.10	3.94	0.60	0.01	0.30	0.04	808.61
2032	0.03	1.29	0.25	0.00	0.08	0.01	232.49
2033	0.00	0.04	0.01	0.00	0.01	0.00	10.68
2034	0.06	2.38	0.37	0.01	0.11	0.02	503.11
2035	0.22	8.91	1.33	0.02	0.77	0.10	1,805.79
2036	0.00	0.04	0.01	0.00	0.01	0.00	10.65
2037	0.00	0.04	0.01	0.00	0.01	0.00	10.65

Year	Total Emissions						
	ROC (tons/yr)	**CO** (tons/yr)	**NOx** (tons/yr)	**SOx** (tons/yr)	**PM_{10}** (tons/yr)	**$PM_{2.5}$** (tons/yr)	**CO_2e** (MT/yr)

Definitions

CO =	carbon monoxide	$PM_{2.5}$ =	particulate matter of less than 2.5 microns
NOx=	nitrogen oxide	ROC =	reactive organic compound
PM_{10} =	particulate matter of 10 microns	SOx =	sulfur oxide
		CO_2e =	carbon dioxide equivalent
		MT =	metric ton

Table 5-10 - 14-Mile Fuel Line Mitigated Construction Emissions – By Year

Year	Total Emissions						
	ROC (tons/yr)	**CO** (tons/yr)	**NOx** (tons/yr)	**SOx** (tons/yr)	**PM_{10}** (tons/yr)	**$PM_{2.5}$** (tons/yr)	**CO_2e** (MT/yr)
2018	0.53	24.90	2.89	0.04	1.50	0.21	4,039.89

Definitions

CO =	carbon monoxide	$PM_{2.5}$ =	particulate matter of less than 2.5 microns
NOx=	nitrogen oxide	ROC =	reactive organic compound
PM_{10} =	particulate matter of 10 microns	SOx =	sulfur oxide
		CO_2e =	carbon dioxide equivalent
		MT =	metric ton

Table 5-11 - 115KV Interconnect and Substation Mitigated Construction Emissions – By Year

Year	Total Emissions						
	ROC (tons/yr)	**CO** (tons/yr)	**NOx** (tons/yr)	**SOx** (tons/yr)	**PM_{10}** (tons/yr)	**$PM_{2.5}$** (tons/yr)	**CO_2e** (MT/yr)
2017	0.02	0.66	0.18	0.00	0.12	0.01	103.81

Definitions:

CO =	carbon monoxide	$PM_{2.5}$ =	particulate matter of less than 2.5 microns
NOx=	nitrogen oxide	ROC =	reactive organic compound
PM_{10} =	particulate matter of 10 microns	SOx =	sulfur oxide
		CO_2e =	carbon dioxide equivalent
		MT =	metric ton

Table 5-12 - Drilling Short Term Mitigated Construction Emissions – By Year

Year	Total Emissions (tons per year)						
	ROC (tons/yr)	**CO** (tons/yr)	**NOx** (tons/yr)	**SOx** (tons/yr)	**PM_{10}** (tons/yr)	**$PM_{2.5}$** (tons/yr)	**CO_2e** (MT/yr)
2017	0.00	0.00	0.00	0.00	0.00	0.00	0.00
2018	0.06	2.23	0.33	0.00	0.25	0.03	538.28
2019	0.98	35.62	5.01	0.08	1.62	0.28	8,378.02
2020	0.00	0.00	0.00	0.00	0.00	0.00	0.00
2021	0.02	0.85	0.12	0.00	0.12	0.01	201.93
2022	0.02	0.91	0.12	0.00	0.12	0.02	214.90
2023	0.02	0.90	0.11	0.00	0.12	0.02	214.51
2024	1.03	37.70	4.75	0.08	1.64	0.29	8,835.30
2025	0.05	1.69	0.21	0.00	0.25	0.03	402.48
2026	0.17	6.39	0.80	0.01	0.63	0.08	1,510.81
2027	0.07	2.57	0.32	0.01	0.25	0.03	605.87
2028	0.06	2.18	0.27	0.00	0.25	0.03	516.68
2029	0.16	5.85	0.73	0.01	0.50	0.07	1,379.01
2030	0.25	9.13	1.14	0.02	0.76	0.11	2,199.53
2031	0.17	6.23	0.78	0.01	0.51	0.07	1,499.71
2032	0.19	6.81	0.85	0.02	0.62	0.08	1,642.81

Year	Total Emissions (tons per year)						
	ROC (tons/yr)	**CO** (tons/yr)	**NOx** (tons/yr)	**SOx** (tons/yr)	**PM_{10}** (tons/yr)	**$PM_{2.5}$** (tons/yr)	**CO_2e** (MT/yr)
2033	0.06	2.23	0.28	0.01	0.25	0.03	540.29
2034	0.21	7.69	0.96	0.02	0.63	0.09	1,851.74
2035	0.45	16.67	2.06	0.04	1.38	0.19	4,011.18
2036	0.08	3.12	0.39	0.01	0.26	0.04	750.20
2037	0.08	3.12	0.39	0.01	0.26	0.04	750.07
2038	0.08	3.11	0.39	0.01	0.25	0.04	749.67
2039	0.08	3.11	0.39	0.01	0.25	0.03	749.30
2040	0.08	3.11	0.39	0.01	0.25	0.04	749.51
2041	0.08	3.11	0.39	0.01	0.25	0.04	749.45
2042	0.08	3.11	0.39	0.01	0.26	0.04	749.69
2043	0.08	3.11	0.39	0.01	0.26	0.04	749.65
2044	0.08	3.11	0.39	0.01	0.25	0.04	749.34
2045	0.08	3.11	0.39	0.01	0.25	0.04	749.32
2046	0.08	3.11	0.39	0.01	0.25	0.04	749.31
2047	0.08	3.11	0.39	0.01	0.25	0.04	749.29
2048	0.08	3.11	0.39	0.01	0.26	0.04	749.56
2049	0.08	3.11	0.39	0.01	0.25	0.04	749.27

Definitions:

CO = carbon monoxide
NOx= nitrogen oxide
PM_{10} = particulate matter of 10 microns
$PM_{2.5}$ = particulate matter of less than 2.5 microns
ROC = reactive organic compound
SOx = sulfur oxide
CO_2e = carbon dioxide equivalent
MT = metric ton

Table 5-13 - Short Term Mitigated Construction – Peak Year

Activity	Total Emissions (tons/year)[1]						
	ROC (tons/yr)	**CO** (tons/yr)	**NOx** (tons/yr)	**SOx** (tons/yr)	**PM_{10}** [3] (tons/yr)	**$PM_{2.5}$** [3] (tons/yr)	**CO_2e** (MT/yr)
Construction Equipment Exhaust	0.83	32.48	8.92	0.06	0.09	0.09	5,460.7
Construction Offsite Mobile Exhaust	0.06	0.60	0.87	0.00	0.04	0.04	348.5
Construction Fugitive Dust	-	-	-	-	6.81	0.68	-
Drilling Equipment Exhaust	0.96	37.43	4.34	0.08	0.13	0.13	8,526.7
Drilling Offsite Mobile Exhaust	0.02	0.27	0.67	0.00	0.005	0.005	308.6
Drilling Fugitive Dust	-	-	-	-	1.49	0.15	-
Peak Year Total[2]	1.87	70.77	14.80	0.15	8.56	1.09	14,644.6
Significance Thresholds	25	NA	25	25	25	25	1,000
Significant?	No	No	No	No	No	No	Yes

Definitions:

CO = carbon monoxide
NOx= nitrogen oxide
PM_{10} = particulate matter of 10 microns
$PM_{2.5}$ = particulate matter of less than 2.5 microns
ROC = reactive organic compound
SOx = sulfur oxide
CO_2e = carbon dioxide equivalent
MT = metric ton

Notes:
1. Peak Year is 2019 for all Pollutants except carbon monoxide and carbon dioxide equivalent. 2024 is the Peak Year for carbon monoxide and carbon dioxide equivalent.
2. Numbers may not add exactly due to rounding.
3. CalEEMod does not give mitigation credit for water to unpaved road travel since the model thinks it is offsite travel, therefore, a 61percent reduction (CalEEMod default factor) of the unpaved road travel fugitive dust emissions was taken manually to account for the onsite unpaved roads being watered three times daily.

Mitigation Measure AQ-1

a) During construction, use water trucks or sprinkler systems to keep all areas of vehicle movement damp enough to prevent dust from leaving the site. The Project should water exposed unpaved traffic areas two to three times per day or as needed, and with increasing frequency when wind speed exceeds 15 miles per hour. Reclaimed water should be used if available and practicable. Soil binders may be used instead of water if practical. The amount of disturbed area will be minimized. Vehicle speeds on unpaved roads will be limited to 15 miles per hour or less. If stockpiling of fill material is required, soil stockpiled for more than two days will be covered, kept moist, or treated with soil binders to mitigate dust generation. Trucks transporting fill material to and from the site will be covered with a tarp from the point of origin. Gravel pads or shakers will be installed at external access points to prevent tracking mud onto public roads. After clearing, grading, earth moving, or excavation is completed, disturbed areas will be watered, re-vegetated, or otherwise controlled to mitigate dust generation.

b) All non-exempt portable diesel-powered construction equipment will be registered with the state's portable equipment registration program OR will obtain a Santa Barbara County Air Pollution Control District permit. Fleet owners of mobile construction equipment are subject to the California Air Resource Board Regulation for In-use Off-road Diesel Vehicles (Title 13 California Code of Regulations, Chapter 9, § 2449), the purpose of which is to reduce diesel particulate matter and criteria pollutant emissions from in-use (existing) off-road diesel-fueled vehicles. For more information, please refer to the California Air Resources Board website at www.arb.ca.gov/msprog/ordiesel/ordiesel.htm. All commercial diesel vehicles are subject to Title 13, § 2485 of the California Code of Regulations, limiting engine idling time. Idling of heavy-duty diesel construction equipment and trucks during loading and unloading will be limited to five minutes; electric auxiliary power units will be used whenever possible.

c) Diesel construction equipment will meet the California Air Resources Board Tier 4 Final emission standards for off-road heavy-duty diesel engines

Because implementation of the above described Mitigation Measure AQ-1 has been estimated to reduce Project-related construction criteria pollutant emission impacts during the peak construction year to below the County of Santa Barbara's thresholds (**Table 5-13**), implementation of the Project would therefore have *less than significant* short-term construction-related criteria pollutant impacts. No additional mitigation measures would be required for criteria pollutants from construction activities.

5.2 IMPACT AQ-2: LONG-TERM OPERATIONS EMISSIONS

Long-term emissions are caused by operational mobile sources and stationary source equipment. Mobile sources from this Project generate exhaust emissions and a minimal amount of fugitive dust from travel on paved roadways. Stationary sources would generate exhaust and fugitive emissions.

Mobile Source Emissions

Mobile source emissions from this Project include engine emissions from employee trips, miscellaneous truck trips, and tanker truck trips traveling to and from the Project site. Emitted pollutants would include reactive organic gases, nitrogen oxides, sulfur oxides, carbon monoxide, particulate matter of 10 microns, particulate matter of less than 2.5 microns, and greenhouse gasses.

EMFAC2014 emission factors were used to estimate long-term engine emissions from employees travel, miscellaneous truck trips, and tanker truck trips. 315 employee trips were estimated to travel a roundtrip distance of 32.4 miles which is the round trip distance to Santa Maria. Employee trips were also assumed to occur seven days a week. Gasoline fueled light-duty trucks were assumed for all employee trips using the aggregate speed and model year options in EMFAC2014. Employee trips were also assumed to occur seven days a week.

Miscellaneous truck trips, which include waste, material, and other general deliveries, will vary from day to day and year to year with a peak of 18 daily trips and 1,989 annual trips. The Project applicant provided a detailed schedule of annual trips and mileage. Diesel fueled heavy-heavy-duty trucks commonly used for commercial transport (EMFAC2014 describes this category as T7 Single) were assumed for all miscellaneous truck trips using the aggregate speed and model year options in EMFAC2014.

Tanker truck trips will vary from day to day and year to year with a peak of 200 maximum daily trips and 72,635 annual trips. The Project applicant provided a detailed schedule of annual trips and mileage. Diesel fueled heavy-heavy-duty T7 Single trucks were assumed for all miscellaneous truck trips using the aggregate speed and model year options in EMFAC2014.

Stationary Source Emissions

At final build-out, the stationary source equipment that will emit criteria pollutants will consist of steam generators, flares, electrical generator, loading racks, oil storage tanks, and components which contribute fugitive emissions.

Steam Generators
High pressure steam for thermally enhanced oil recovery will be generated by seven natural gas fired once-through steam generators with low nitrogen oxide burners. In addition to use of natural gas provided by Southern California Gas Company, steam generator fuel will be supplemented with treated produced natural gas. In conformance with applicable Santa Barbara County Air Pollution Control District rules, steam generator designs will incorporate technology to meet the latest fired equipment standards for nitrogen oxides and particulate emissions.

Six 85 million British thermal units per hour steam generators will be installed at the steam generation site located in mid-field area. The primary fuel for the 85 million British thermal units per hour will be utility provided natural gas. Sweetened produced gas that would otherwise be flared may be blended with the utility provided gas and sent to these steam generators as fuel to minimize flaring.

A single 62.5 million British thermal units per hour steam generator unit will also be located at the steam generation site. This steam generator will be fired on sweetened produced gas, supplemented by utility provided natural gas.

Feedwater to these steam generators will be softened produced water pre-heated by heat integration. Steam from these units will be directed to the Project steam distribution network.

The steam generator emissions were estimated using the Santa Barbara County Air Pollution Control District's Boiler/Steam Generator Calculation Worksheet version 6.0. The following assumptions were used in the calculator:

- Steam generators are designed to operate 24 hours per day, 365 days per year.
- The 85 million British thermal units per hour steam generators will be fired primarily on utility provided quality natural gas and occasionally a mixture of utility provided gas and sweetened produced gas.
- The utility provided gas higher heating value = 1,050 British thermal units per standard cubic feet.
- The utility provided gas F-Factor = 8,578 dry standard cubic feet per million British thermal units (corrected to 60 degrees Fahrenheit). The blend of utility provided gas and sweetened produced gas is expected to have similar values.
- The utility provided gas sulfur content will have one grain per 100 standard cubic feet (16 parts per million by volume). Note: the Southern California Gas Company Rule No. 30 TRANSPORTATION OF CUSTOMER-OWNED GAS limits total sulfur in the natural gas delivered to Aera at 0.75 grains/100 standard cubic feet (12.6 parts per

million). The blend of utility provided gas and sweetened produced gas is expected to comply with this standard.

- All steam generators will be equipped with a dual pass steam generator control system to ensure oxides of nitrogen do not exceed the proposed emission limits.
- Three 85 million British thermal units per hour steam generators (SG-8120, SG-8220 and SG-8320) will be installed as part of Phase I of the Project and three additional 85 million British thermal units per hour steam generators (SG-8420, SG-8520 and SG-8620) will be added as part of Phase II of the Project.
- One 62.5 million British thermal units per hour steam generator (SG-6030) will be installed as part of Phase I of the Project, and it will be used to incinerate desulfurized produced gas from the crude oil production and dehydration equipment.
- 85 million British thermal units per hour steam generators emission factors:

Table 5-14 - 85 Million British Thermal Units Per Hour Steam Generator Emission Factors

Pollutant	Lbs/MMBtu	Parts Per Million by Volume	Source
Oxides of nitrogen	0.0061	5 at 3 percent oxygen	Burner Manufacturer's Guarantee
Oxides of sulfur	0.00285	16	Mass Balance @ 1 gr S/100 scf [1]
PM_{10}	0.003		Applicant Proposed [2]
Carbon Monoxide	0.0184	25 at 3 percent oxygen	Applicant Proposed [3]
Reactive organic compounds	0.0016	4.0 at 3 percent oxygen	Burner Manufacturer's Guarantee [4]

Definitions:
PM_{10} = particulate matter up to 10 microns
gr = grains
scf = standard cubic feet
lb/MMBtu = pounds per million British thermal units

Notes:
1. See Southern California Gas Company Rule # 30 Transportation of Customer Gas (See Attachment A, Emission Calculations and Support Documents)
2. Based on emissions testing documenting that natural gas fired steam generators have a particulate matter up to 10 microns emission rate of 0.001 pounds per million British thermal units (See Attachment A, Emission Calculations and Support Documents).
3. Based on emissions testing documenting that natural gas fired steam generators have a carbon monoxide emission rate of <0.0184 pounds per million British thermal units (See Attachment A, Emission Calculations and Support Documents).
4. Based on emissions testing documenting that natural gas fired steam generators have a reactive organic compounds emission rate of <0.002 pounds per million British thermal units which indicates complete combustion and the manufacturer's guarantee (See Attachment A, Emission Calculations and Support Documents).

- 62.5 million British thermal units per hour steam generators emission factors:

Table 5-15 - 62.5 Million British Thermal Units Per Hour Steam Generator Emission Factors

Pollutant	Lbs/MMBtu	Parts Per Million by Volume	Source
Oxides of nitrogen	0.0085	7 at 3 percent oxygen	Burner Manufacturer's Guarantee
Oxides of sulfur	0.00127	80	Estimate to account for Sulfur in produced gas [1]
PM_{10}	0.0076		AP-42 [2]
Carbon Monoxide	0.0184	25 at 3 percent oxygen	Applicant Proposed [3]
Reactive organic compounds	0.0016	4.0 at 3 percent oxygen	Burner Manufacturer's Guarantee [4]

Definitions:
PM_{10} = particulate matter up to 10 microns
Lbs/MMBtu = pounds per million British thermal units

Notes:
1. Santa Barbara County Air Pollution Control District emission factor
2. Based on Santa Barbara County Air Pollution Control District requirement due to potential sulfur in fuel (See Attachment A, Emission Calculations and Support Documents).
3. Based on emissions testing documenting that natural gas fired steam generators have a carbon monoxide emission rate of <0.0184 pounds per million British thermal units (See Attachment A, Emission Calculations and Support Documents).
4. Based on emissions testing documenting that natural gas fired steam generators have a reactive organic compounds emission rate of <0.0016 pounds per million British thermal units which indicates complete combustion and the manufacturer's guarantee (See Attachment A, Emission Calculations and Support Documents).

Flare

The flare is a 40 million British thermal units per hour rated air-assisted, totally enclosed emergency flare that will meet Best Available Control Technology requirements. The flare will be located at the steam generation site and will not have a visible flame or create excessive noise. Flaring of gas will be limited to a maximum of 1.5 hours per day and no more than 180 hours per year.

The flare emissions were estimated using emission factors from AP-42 and manufacturer's guarantees. The following assumptions were used in the calculations:

- The 40 million British thermal unit per hour nominal capacity flare operates only during periods of breakdown or upset where safety protocols require produced gas to be flared and the gas flow cannot be handled by the steam generators.
- The flare may be operated up to 1.5 hours per day and 180 hours per year when the steam generators are not operating or unable to combust the produced gas.
- Pilot gas flow rate to the flare will not exceed 45 standard cubic feet per hour, 8,760 hours per year.
- Maximum gas flow rate to the flares will not exceed one million standard cubic feet per day.
- The sulfur content of the gas flared will not exceed 80 parts per million by volume.
- Flare emission factors are as follows:

Table 5-16 - 40 Million British Thermal Units Per Hour Flare Emission Factors

Oxides of Nitrogen	Oxides of Sulfur	Particulate Matter Up to 10 Microns In Diameter	Carbon Monoxide	Reactive Organic Compounds [2]	Carbon Dioxide Equivalents
(pounds per million British thermal units)					
0.068	0.0137	0.02	0.31	0.10	-[1]

Notes:
1. 53.02 kilograms per million British thermal units assuming flared gas has a higher heating value of 1,050 British thermal units per standard cubic feet.
2. The manufacturer, Aeron, has guaranteed a total hydrocarbon emission factor of 0.14 pounds per million British thermal units. Since the produced gas is expected to be mostly methane, reactive organic compound emissions are expected to be less than 0.10 pounds per million British thermal units.

Electrical Generator

An emergency electrical generator will provide electrical power during an outage of electrical power service and will be located at the Project central processing facility. This spark ignited, internal combustion engine will be fueled by utility provided natural gas. It will generate sufficient power to operate the Project's 62.5 million British thermal units per hour steam generator, plant vapor control systems, and plant instrument air compressors. The following assumptions were used in the calculations:

- The engine is fired on utility provided gas; therefore, it is not limited by the 200 hour per year limit applied to diesel fired engines.
- The engine is equipped with a non-selective catalytic control system.
- The engine will operate during power outages for no more than 600 hours per year.
- Greenhouse gas emissions are based on the California Air Resources Board approved emission factors and calculation procedures.
- Applicant is proposing to operate the emergency electrical generator in compliance with previously approved emission factors for this type of equipment as shown below which include the use of catalytic control systems:

Table 5-17 - Internal Combustion Engine Emission Factors

Pollutant	Grams Per Horse-Power Hour	Parts Per Million by Volume	Source
Oxides of nitrogen	0.069	5 at 15 percent oxygen	Manufacturer's Guarantee
Oxides of sulfur	0.006	80	Mass Balance at 0.88 grain per 100 standard cubic feet
Particulate matter up to 10 microns	0.003		Applicant Proposed
Carbon Monoxide	0.209		Manufacturer's Guarantee
Reactive organic compounds	0.048		Manufacturer's Guarantee

Pollutant	Grams Per Horse-Power Hour	Parts Per Million by Volume	Source
Notes: These emission factors represent the expected post catalytic control emission factors and not the uncontrolled engine emission guarantees in Attachment A, Emission Calculations and Support Documents. Pre-construction submittal of engine and catalytic control system manufacturer design specifications and emission guarantees will be required by permit condition.			

Loading Racks

The loading rack emissions were estimated using the Santa Barbara County Air Pollution Control District's Loading Rack Emissions Calculator version 3.0. The following assumptions were used in the calculator:

- Facility operates 24 hours per day, 365 days per year.
- Emissions from unloading light crude oil into the light crude oil storage tanks is accounted for in the storage tank emission calculations; therefore, a truck unloading emission calculation has not been added.
- Light crude oil deliveries will be 1,666 barrels per day for Phase I and 3,000 barrels per day for Phase II operations. Tank missions are based on a maximum daily throughput for each tank of 3,000 barrels per day.
- The maximum heavy crude oil truck loading from each 10,000 barrel storage tank will be 10,000 barrels per day for Phase I and for Phase II operations. Phase I will include one storage tank, a second storage tank will be added in Phase II, for a total maximum truck loading of 20,000 Barrels per day at full build out in Phase II.
- The crude oil loading temperature is 200 degrees Fahrenheit with a molecular weight of 50 pounds per pound-mole and a true vapor pressure of 0.50 pounds per square inch.
- Each loading rack will utilize submerged loading dedicated normal service vessels and each loading rack will be able to load two tanker trucks at a time.
- Truck loading emissions for the blended crude oil are calculated using the Santa Barbara County Air Pollution Control District Loading Rack Emissions calculator with the preceding throughput and the heavy crude oil storage tank liquid parameters.
- Greenhouse gas emissions are calculated assuming that all reactive organic compound emissions are methane and applying the state approved Global Warming Potential factor of one ton methane equals 21 tons of carbon dioxide equivalent.
- Submerged loading: Dedicated vapor balance service (Saturation Factor 0.60).
- Vapor recovery efficiency = 0.95.

Oil Storage Tanks

Oil storage tanks would be installed at the facility in various sizes for various operational functions. The storage tank emissions were estimated using the Santa Barbara County Air Pollution Control District's worksheet Fixed Roof Calculation (AP-42: Chapter 7 Method). The following assumptions were used in the worksheet:

- Facility operates 24 hours per day, 365 days per year.
- Two – 6,500 barrels light crude oil storage tanks T- 2040 and 2050 each with a maximum daily throughput of 3,000 barrels per day and 729,000 barrels per year with a true vapor pressure of 1.57 pounds per square inch at 60 degrees Fahrenheit.
- Two -10,000 barrels heavy crude oil storage tanks T-2170 and 2180 each with a maximum daily throughput of 10,140, barrels per day and 2,961,000 barrels per year with a true vapor pressure of 0.50 pounds per square inch at 200 degrees Fahrenheit.
- Two - 1,000 barrels capacity sludge tanks T-7030 and 7140 with an expected maximum throughput of 803 barrels per day and 234,000 barrels per year with a true vapor pressure of 0.50 pounds per square inch at 180 degrees Fahrenheit.
- Two - 1,000 barrels capacity skim oil tanks T-7070 and 7180 with an expected maximum throughput of 2,922 barrels per day and 853,224 barrels per year with a true vapor pressure of 0.50 pounds per square inch at 180 degrees Fahrenheit.
- Two 100 barrels capacity drain T-9560 and 9600 with an expected maximum throughput of 50 barrels per day and 18,250 barrels per year with a true vapor pressure of 0.50 pounds per square inch at 180 degrees Fahrenheit.
- All storage tanks will be served by the facility vapor recovery system with a short term vapor control efficiency of 95 percent and 95 percent long term vapor collection efficiency.
- Greenhouse gas emissions are calculated assuming that all reactive organic compound emissions are methane and applying the state approved Global Warming Potential factor of one ton methane equals 21 tons of carbon dioxide equivalent.

Fugitive Leaks

Emissions would also occur from fugitive leaks from equipment components. The fugitive leak emissions were calculated in a worksheet using the Component Leak Path Methodology. The following assumptions were used in the worksheet:

- Expected emissions are calculated using Santa Barbara County Air Pollution Control District component leak path methodology equations based on a Rule 331 fugitive leak inspection program.
- The facility will be designed and built to comply with the District's Rule 331 Best Available Control Technology standards as found in Air Pollution Control District Form-31.
- Greenhouse gas emissions are based solely on the methane fraction of the produced gas and applying the state approved Global Warming Potential factor of one ton methane equals 21 tons of carbon dioxide equivalent.
- Reactive organic compounds/Total Hydrocarbon ratio is 31 percent per Table 2 of the Santa Barbara County Air Pollution Control District Policy 6100.061.1998.
- Estimated Facility Component Counts:

Table 5-18 - Facility Component Counts

	Valves	Others	Connectors	Flanges	Compressors	Pumps
Phase I						
Gas	1,127	47	2,463	2,025	2	0
Liquid	4,721	15	4,322	6,982	0	49
Phase II						
Gas	772	44	1,594	1,364	2	3
Liquid	4,084	13	3,036	5,864	0	32

Projected Emissions

Table 5-19 presents the project's long-term unmitigated emissions based on the anticipated operational peak year. Calculation and summary spreadsheets are available in **Attachment A**.

Table 5-19 - Long Term Unmitigated Operational Emissions – Peak Year

Activity	Total Emissions [1]						
	ROC	CO	NOx	SOx	PM_{10}	$PM_{2.5}$	CO_2e
	(lbs/day)	(lbs/day)	(lbs/day)	(lbs/day)	(lbs/day)	(lbs/day)	(MT/yr)
Offsite: Mobile (Non-Tankers)	0.77	9.53	20.88	0.16	1.47	0.60	1,084.6
Offsite: Mobile Tankers	4.25	23.71	117.92	0.85	6.16	2.51	14,735.3
Stationary Equipment	87.81	283.27	94.67	55.05	49.49	49.49	267,077.9
Fugitive Dust Emissions	-	-	-	-	400.5	39.97	-
Peak Year Total[2]	**92.83**	**316.51**	**233.47**	**56.05**	**457.62**	**92.58**	**282,898**
Significance Thresholds	55	NA	55	NA	80	NA	1,000
Significant?	Yes	No	Yes	No	Yes	No	Yes
Mobile Only Significance Threshold	25	NA	25	NA	NA	NA	NA
Significant?	No	No	Yes	No	No	No	No

Definitions:

CO =	carbon monoxide	ROC =	reactive organic compound
NOx=	nitrogen oxide	SOx =	sulfur oxide
PM_{10} =	particulate matter of 10 microns	CO_2e =	carbon dioxide equivalent
$PM_{2.5}$ =	particulate matter of less than 2.5 microns	MT =	metric ton
		lbs =	pounds

Notes:
1. Peak Year is based on a Pollutant by Pollutant basis.
2. Numbers may not add exactly due to rounding.

As calculated, long-term unmitigated emissions are predicted to *exceed* Santa Barbara County Air Pollution Control District and Santa Barbara County significance threshold levels for nitrogen oxides, reactive organic compounds, particulate matter of ten microns and carbon dioxide equivalencies. Therefore, according to the California Environmental Quality Act, all feasible mitigation needs to be applied to the project in an effort to bring the project to a less than significant level.

The applicant has no authority over employee vehicles and miscellaneous truck trips coming to and from the Project site, therefore, no mitigation to these emissions are feasible. The tanker truck trips will be mitigated in accordance with Mitigation Measure AQ-2a, below, to reduce emissions to the greatest extent. Greenhouse Gas emissions and mitigation measures are further discussed in **Section 7.0**.

All stationary source emissions will be in compliance with Santa Barbara County Air Pollution Control District Rules and Regulations which also requires best available control technology; therefore, all feasible mitigation has already been applied. However, offsets for stationary source emissions will be required. Mitigation Measure AQ-2b, below, will be implemented and the nitrogen oxide and reactive organic compound emissions will be offset as shown in **Table 5-20**. However, as shown in **Table 5-20**, even with implementation of Mitigation Measures AQ-2a and AQ-2b, long-term emissions would not be reduced to a less than significant level for nitrogen oxide due to the mobile source contributions.

Table 5-20 - Long Term Operational Emissions after Mitigation – Peak Year

Activity	Total Emissions [1]						
	ROC	**CO**	**NOx**	**SOx**	**PM_{10}**	**$PM_{2.5}$**	**CO_2e**
	(lbs/day)	(lbs/day)	(lbs/day)	(lbs/day)	(lbs/day)	(lbs/day)	(MT/year)
Offsite: Mobile (Non-Tankers)	0.77	9.53	17.19	0.16	1.47	0.60	1,084.6
Offsite: Mobile Tankers	3.00	17.69	41.79	0.81	5.86	2.23	14,119.9
Stationary Equipment	87.81	283.27	94.67	55.05	49.49	49.49	267,077.9
Fugitive Dust Emissions	-	-	-	-	19.14	1.91	-
Stationary Source Offsets[3]	-36.57	-	-94.67	-	-	-	-
Peak Year Total[2]	**54.99**	**310.48**	**58.98**	**56.02**	**75.97**	**54.24**	**282,282**
Significance Thresholds	55	NA	55	NA	80	NA	1,000
Phase II Significant?	No	No	Yes	No	No	No	Yes
Mobile Only Significance Threshold	25	NA	25	NA	NA	NA	NA
Significant?	No	No	Yes	No	No	No	No
Definitions:							

CO =	carbon monoxide	ROC =	reactive organic compound
NOx=	nitrogen oxide	SOx =	sulfur oxide
PM_{10} =	particulate matter of 10 microns	CO_2e =	carbon dioxide equivalent
$PM_{2.5}$ =	particulate matter of less than 2.5 microns	MT =	metric ton
		lbs =	pounds

Notes:
1. Peak Year is based on a Pollutant by Pollutant basis. All pollutants peak year is 2029.
2. Numbers may not add exactly due to rounding.
3. Stationary Source nitrogen oxide and reactive organic compounds emissions offsets will be purchased in order to mitigate emissions to less than significant or to the greatest extent possible if less than significance cannot be achieved.

Source: Insight Environmental Consultants 2014

<u>Mitigation Measure AQ-2</u>

a) Aera will deploy and maintain a tanker truck fleet consisting of three years old or younger truck engines by replacing older trucks with newer trucks whenever they reach the three year threshold.

b) In accordance with Santa Barbara County and Santa Barbara County Air Pollution Control District requirements, Aera will provide the required emission reduction credits for stationary source pollutants.

c) Emissions will be mitigated to less than significant or to the greatest extent feasible, if less than significant cannot be achieved.

The Project's long-term operational emissions, even with the application of Mitigation Measure AQ-2, will exceed the significance thresholds. The Project's mitigated nitrogen oxide emissions from mobile sources alone will exceed both the mobile sources only significance threshold of 25 pounds per day and the Project total (stationary and mobile sources) significance threshold of 55 pounds per day. Therefore, this Project has mitigated long-term emissions to the greatest extent feasible but will have *significant* long-term operational-related impacts for nitrogen oxide emissions.

5.3 POTENTIAL ODOR IMPACTS

This Project has potential to create odor impacts. Odor thresholds are defined as the point at which a person can detect the substance by smell. According to the American Industrial Hygiene Association, the odor detection threshold is the lowest concentration of odorant that will elicit a sensory response in the olfactory receptors of a specified percentage of a given population (American Industrial Hygiene Association 1989). The annoyance level would be a higher concentration.

Based on a review of surrounding land uses and existing area development, odors from the proposed Project are not expected to significantly impact receptors. As shown in **Figure 5-1** below, there are 48 known residential receptors, a winery tasting room, and an office within one mile of the Project's property boundary. The closest residential receptors to the central processing plant are located 0.40 miles to the south and 1.27 miles to the southeast.

5-1

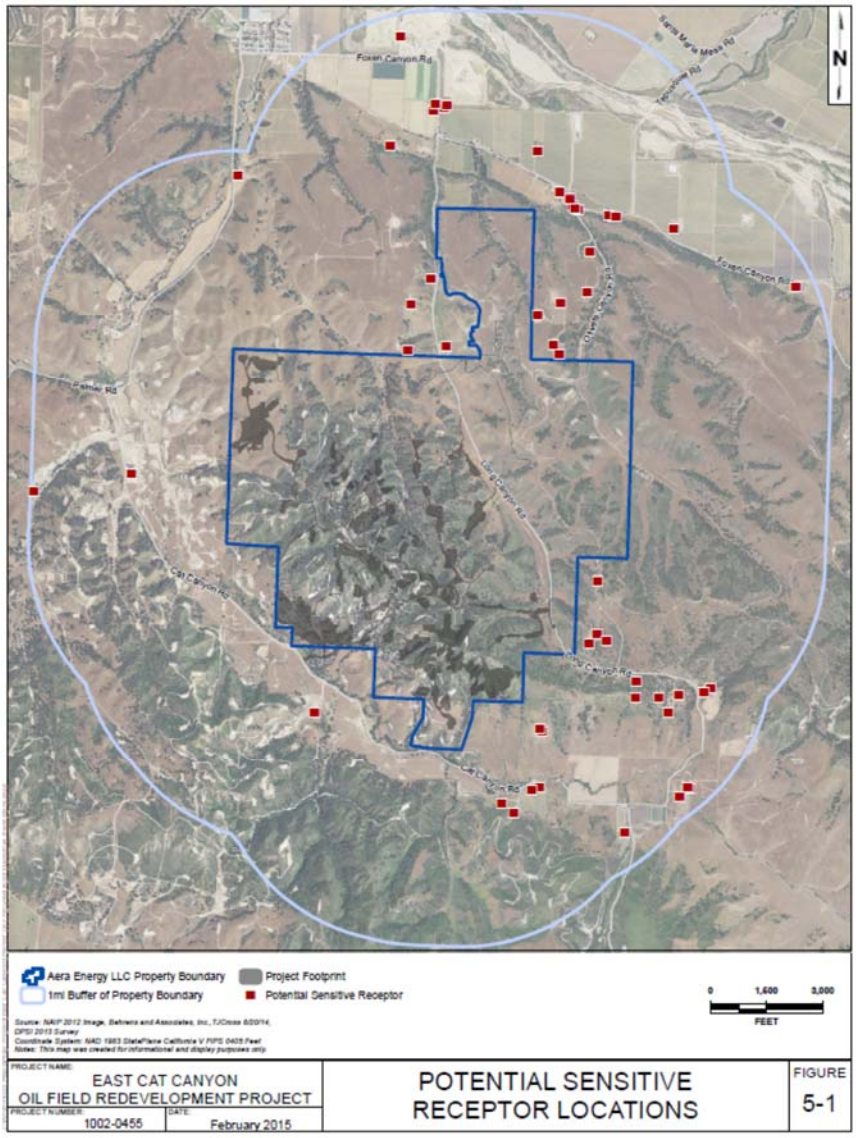

Figure 5-1 - Potential Sensitive Receptor Locations

Odor events could occur due to several different situations associated with equipment or drilling upset conditions. The equipment components could also leak and cause odors. Tanks are equipped with hatches to protect them from overpressure. If these hatches lift, due to a failure of the vapor recovery compressor, for example, odor events could occur. During drilling operations, pockets of gas can be encountered, which can be picked up by the circulating muds, brought to the surface, and released through the mud processing system.

The release of material that contains even small amounts of sulfur compounds or hydrocarbons produces an odor. Sulfur compounds, found in oil and gas, have very low odor threshold levels.

<u>Mitigation Measure AQ-3a</u>

a) In order to mitigate odor releases from tanks due to hatch release, Aera will set up the vapor recovery system to notify the operator when the tank pressure is within ten

percent of the tank relief pressure. Additionally, personal hydrogen sulfide monitors and wind socks that will be deployed onsite for employee safety will further mitigate the risk of objectionable odors leaving the Project site.

b) Aera will develop an Odor Minimization Plan which will address potential odors from oil field equipment and measures to reduce or eliminate these odors. The Plan will address issues such as facility information, buffer zones, signs with contact information, logs of odor complaints, protocol for handling odor complaints and odor event investigation and methods instituted to prevent re-occurrence.

Implementing these mitigation measures would reduce the potential likelihood and consequence of odor events. Although odor events could still occur, Project Measures would most likely reduce the impacts from odors to less than significant.

5.4 PREDICTED HEALTH RISK IMPACTS

According to Santa Barbara County Air Pollution Control District Modeling Guidelines for Health Risk Assessments (SBCAPCD 2015) a Health Risk Assessment must be completed for any of the following situations:

1. The District has determined that a Health Risk Assessment is necessary as part of the District's New Source Review permitting program.
2. A Health Risk Assessment is necessary as part of the California Environmental Quality Act process.
3. The District has determined that a Health Risk Assessment is necessary as part of the District's evaluation of the facility in the AB2588 Air Toxics "Hot Spots" program.

According to the above criteria a Health Risk Assessment is necessary for the proposed Project. Details of the Health Risk Assessment are outlined herein.

Facility Information

The East Cat Canyon Oil Field Redevelopment Project will be located at 6516 East Cat Canyon Road in Santa Maria, California. **Figure C-9 of Attachment C** displays the Universal Transverse Mercator coordinates for 25 locations along the Project boundary. The Universal Transverse Mercator coordinates utilize the WGS84 Zone 10 North datum.

The Health Risk Assessment included 45 toxic substances. **Table C-1 of Attachment C** lists the Project's sources including the AERMOD source identification and hourly emissions of each pollutant for each source. **Table C-2 of Attachment C** also lists the sources along with annual emissions of each pollutant for each source. Some sources maybe modeled using multiple sources to include the entire source's emitting area.

Source Information

The Health Risk Assessment consisted of three types of source releases, point sources, line sources and volume sources. Point source releases were used for steam generator stacks,

emergency generator stack, flare stack, and tank vents. Stack parameters for steam generators, emergency generators, and flare stacks were taken from manufacturer specifications (Attachment E, Equipment Specifications). Tank vent and release parameters were input according to Santa Barbara County Air Pollution Control District's Health Risk Assessment modeling guideline's (SBCAPCD 2015) Appendix B. Volume source releases were used for fugitive component leaks and solvent usage. The area of the volume sources were estimated to cover the anticipated area that components and solvent usage will be located. Some areas were represented by multiple smaller volume sources to best cover the anticipated areas of possible leaks since volume sources cannot be angled or modeled as poly-volume sources in AERMOD. Gas service components and oil service components have different average release heights in several modeled areas, therefore, gas service and oil service components were modeled as separate sources in these areas. All components located in the group station and steam generator sites were conservatively modeled using the same release height. The line source was used for onsite vehicular travel. Line sources were mapped according to estimated travel routes. **Table C-3 of Attachment C** lists all sources including their AERMOD identification ID, release type, Universal Transverse Mercator coordinates (WGS84 Zone 10 North), and release parameters.

The facility operates 24 hours a day and seven days per week; therefore, all equipment is assumed to operate the same hours as the facility with the exception of emergency equipment. **Table 5-21** below describes the operating schedule of the emergency equipment.

Table 5-21 - Operating Schedule for Flare and Emergency Generator

Source	AERMOD ID	Hours/day	Hours/Year	Days/Week	Weeks/Year
Flare	STCK16	1.5	180	Varies	Varies
Emergency Generator	STCK14	24	600	Varies	Varies

Emission Quantification

Emissions were quantified for the Project's toxic substances that are identified has having a cancer or non-cancer acute or chronic risk on the California Air Resources Board's Consolidated Table of Office of Environmental Health Hazard Assessment/Air Resources Board Approved Risk Assessment Health Values (CARB 2015).

Steam generator toxic emissions were calculated using speciation emission factors from the Ventura County Air Pollution Control District (VCAPCD 2001) and emission factors from AP-42. Flare combustion emissions were calculated using speciation emission factors from the Ventura County Air Pollution Control District (VCAPCD 2001). Fugitive leak emissions from components, tanks, and loading racks were calculated using California Air Resources Board's speciation profiles and Project specific hydrogen sulfide concentrations. Toxic solvent emissions were calculated using product specific material safety data sheets. Internal combustion emissions were calculated using emission factors from AP-42. **Tables C-4 through C-17 of Attachment C** are the calculations for the toxic emissions. **Tables C-1 and C-2 of Attachment C** display the hourly and annual emissions of each toxic for each source.

Meteorological Data

The meteorological data utilized in the Health Risk Assessment was obtained from the Santa Barbara County Air Pollution Control District's website. The Santa Maria Airport meteorological data was used as it was closest to the Project site and a better representation to the meteorological conditions in the Project area. The Santa Maria Airport meteorological data includes the years from 2010-2014.

Air Dispersion Model

The most recent version of Environmental Protection Agency's AMS/EPA Regulatory Model - AERMOD (recompiled for the Lakes ISC-AERMOD View interface version AERMOD_15181) was used to predict the dispersion of emissions from the Project. Regulatory default options were selected using rural dispersion and elevated terrain. Building Profile Input Program was run to calculate building downwash for stacks near buildings and tanks. **Table C-18 of Attachment C** lists all the heights and Universal Transverse Mercator coordinates (WGS84 Zone 10 North) for all structures included in the calculations for building downwash. The following modeling files have been included electronically (only):

- Surface Met Data File (SMX10-14.sfc)
- Profile Met Data File (SMX10-14.pfl)
- Digital Elevation Map Files
    - Foxen Canyon (9030_75m.dem)
    - Sisquoc (9030_75m.dem)
    - Tepusquet Canyon (8934_75m.dem)
    - Twichell Dam (9030_75m.dem)
- AERMAP Source File (HRA2.sou)
- AERMAP Receptor File (HRA2.rou)
- AERMAP Output File (MAPDETAIL.out and MAPPARAMS.out)
- BPIP Input File (HRA2.bpi)
- BPIP Summary File (HRA2.sum)
- BPIP Output File (HRA2.pro)
- AERMOD Input File (HRA2.adi)
- AERMOD Output File (HRA2.ado)
- AERMOD Error File (HRA2.err)
- Plotfiles (example: 01H1G001.plt)

Receptors

A total of 3,834 receptors were analyzed for the Health Risk Assessment which included 354 property boundary receptors, 48 residential receptors worker receptors, 33 road receptors, and 3,395 grid receptors. Grid receptor spacing was selected according to Santa Barbara County Air Pollution Control District's Modeling Guidance Section 2.8.3 which states "For facilities with very large property boundaries (e.g., oil and gas leases), the grid spacing must be no greater than 100 meters apart." Section 2.8.3 also states "The grid shall extend at least two kilometers from the property boundary for all property sizes." The grid was constructed using

a “fence-line grid” with fence-line spacing of 100 meters and one tier of receptors extending out two kilometers with tier spacing of 100 meters.

Property boundary receptor spacing was selected according to Santa Barbara County Air Pollution Control District’s Modeling Guidance Section 2.8.4 which states “For larger facilities, like oil and gas leases, a spacing of 50-100 meters is more practical.” Therefore, property boundary receptor spacing of 50 meters was selected. All receptors were modeled with a flagpole height of 1.5 meters. No sensitive receptors were modeled as there are no schools, daycare facilities, hospitals, or care facilities located within two kilometers of the Project site.

The public will not have access to roadways on the Project site. Therefore, no onsite receptors were modeled for acute risk. The road receptors are for an offsite roadway. Receptors were placed on this roadway as a conservative measure to analyze acute risk on the section of roadway nearest to the Project’s central processing plant. There were not any pathway receptors modeled, however, multi-pathway analysis was conducted for all modeled receptors.

Receptor 140 was determined to be the worst case receptor for the beef multi-pathway, therefore, it was used for the worst case pasture receptor during the second model run. Pathway receptors are typically modeled with no flagpole height; however, receptor 140 was modeled with a 1.5 meter flagpole height which would be more conservative than a zero flagpole height. **Table C-19 Attachment C** lists all modeled receptors and their Universal Transverse Mercator coordinates (WGS84 Zone 10 North). Additionally, a third model run was also conducted with a refined receptor grid spacing. The refined receptor grid consisted of receptors with 25 meter spacing covering any area within 250 meters of any receptor from the original receptor grid that resulted in a cancer risk of seven in a million or greater or an acute or chronic hazard index of 0.7 or greater. This refined grid consisted of 1,405 receptors.

Multi-pathway and Exposure Parameters

In order to be conservative, all receptors were modeled as multi-pathway receptors. Pathways that were evaluated for the Health Risk Assessment included inhalation, soil, dermal, mother’s milk, homegrown produce, beef, chickens and eggs. Pathway and exposure parameters included in the Health Risk Assessment are:

Deposition Rate - A deposition rate must be used when determining potential multi-pathway health impacts. A deposition rate of 0.05 meters per second was selected as there are no verifiable particulate matter control devices in place at the Project.

Inhalation – The inhalation pathway was included in the Health Risk Assessment. Fraction of time at home options were not selected in the initial cancer risk analysis. However, no schools or daycares were within the one per million cancer risk isopleth, therefore, the Project was reanalyzed with both fraction of time at home options selected.

Soil Ingestion – The soil ingestion pathway was included in the Health Risk Assessment. There are no other parameters selected for soil ingestion pathway.

Dermal – The dermal pathway was included in the Health Risk Assessment. Santa Barbara County Air Pollution Control District's modeling guidance instructed modelers to select warm climate for any projects located in Santa Barbara County; therefore, warm climate was selected for this Project.

Mother's Milk – The mother's milk pathway was included in the Health Risk Assessment. There are no other parameters selected for the mother's milk pathway.

Drinking Water - The drinking water pathway was not included in the Health Risk Assessment because there are not any residential receptors with a pond or other water source that is used for human drinking water within the isopleths of one per million for cancer risk or a hazard index of 0.1 for chronic non-cancer risk.

Fish – The fish pathway was not included in the Health Risk Assessment because there are not any residential receptors with a fish pond or lake within the isopleths of one per million for cancer risk or a hazard index of 0.1 for chronic non-cancer risk.

Homegrown Produce – The homegrown produce pathway was included in the Health Risk Assessment. The HARP2 default fractions for households that garden were selected.

Beef – The beef pathway was not included in the initial cancer risk analysis. However, since cattle grazing pastures could be located anywhere near the facility and the Project has an isopleth of at least one per million for cancer risk; the beef pathway was included in the reanalyzed cancer risk analysis. Receptor 140 was determined to be the worst case receptor for the beef multi-pathway, therefore, it was used for the worst case pasture receptor during the second model run. The HARP2 default fractions for the fraction of human diet from contaminated source for households that raise/hunt were selected. Office of Environmental Health Hazard Assessment's default of 0.5 was used for the grazing fraction from a contaminated source. The fraction of beef cows drinking water from contaminated sources was set to zero since there are no surface water sources of drinking water for the animals, such as springs, ponds, or lakes.

Dairy – The dairy pathway was not included in the Health Risk Assessment because there were not any dairy pastures within the isopleths of one per million for cancer risk or a hazard index of 0.1 for chronic non-cancer risk of the initial Health Risk Assessment run.

Pig - The pig pathway was not included in the Health Risk Assessment because there were not any pig farms within the isopleths of one per million for cancer risk or a hazard index of 0.1 for chronic non-cancer risk.

Chickens, and Egg – The chicken and egg pathways were included in the Health Risk Assessment. The HARP2 default fractions for the fraction of human diet from contaminated source for households that raise/hunt were selected. The default fractions for animal diets that are recommended by Office of Environmental Health Hazard Assessment were selected. The fraction of chickens and eggs drinking water from contaminated sources was set to zero because there are not any surface water sources such as ponds, springs, or lakes.

Health Values and HARP Version

The newest version of the HARP2 – Air Dispersion and Risk Tool dated 16057 was used for the Health Risk Assessment. The pollutant health information database used in the Health Risk Assessment was dated 16057.

Risk Scenarios

Cancer Risk

The cancer risk for the maximally exposed individual resident, the point of maximum impact and the maximally exposed individual worker were evaluated for the Health Risk Assessment. HARP2 post processing method was used to calculate the maximally exposed individual worker and no adjustment factor was used. **Table 5-22** below shows how the risk values were calculated.

Table 5-22 - Required Cancer Risk Scenarios

Receptors	HARP Receptor Type	HARP Exposure Duration	HARP Intake Rate Percentile
PMI	Individual Resident	30 Year	RMP using the Derived Method
Residential Receptors	Individual Resident	30 Year	RMP using the Derived Method
Worker Receptors	Worker	25 Year (Worker)	OEHHA Derived Method
Definitions: HARP = Hotspots Analysis Reporting Program PMI = Point of Maximum Impact RMP = Risk Management Policy OEHHA = Office of Environmental Health Hazard Assessment			
Note – Sensitive Receptors were not analyzed because there were not any located within two kilometers of the Project site or within the one per million cancer risk isopleth.			

Non-Cancer Risk

The non-cancer chronic and acute risks for the point of maximum impact, maximally exposed individual resident, and maximally exposed individual worker were evaluated using the Office of Environmental Health Hazard Assessment Derived Method. HARP2 post processing was used to calculate the maximally exposed individual worker and no adjustment factor was used. Acute risk calculated for this Project was calculated as simple acute risk.

An 8-hour chronic risk was required to be evaluated for the maximally exposed individual worker, additionally, the point of maximum impact and maximally exposed individual resident were also evaluated. The HARP2 post processing method was used to calculate the 8-hour chronic risk and no adjustment factor was used.

Health Risk Results

The results for the Health Risk Assessment are included in **Tables 5-23 through 5-26** below.

Table 5-23 - Summary of Maximum Cancer Health Risk Impacts

Receptor	Cancer Risk (in a million)	Significance Threshold	Receptor Number	UTME (meters)	UTMN (meters)
Offsite PMI	76.8	N/A	197	748126.34	3856562.94
MEIR	3.78	≥ 10	3756	750008.15	3855508.22
MEIW	0.10	≥ 10	3799	746553.9	3857885.18

Definitions:

PMI = Point of Maximum Impact
MEIR = Maximally Exposed Individual Resident
MEIW = Maximally Exposed Individual Worker
UTME = Universal Transverse Mercator Easting Coordinate (World Geodetic System 1984 Zone 10 North)
UTMN = Universal Transverse Mercator Northing Coordinate (World Geodetic System 1984 Zone 10 North)

Notes: Cancer Risk results are the results of the reanalyzed cancer risk which included fraction of time at home options selected and beef pathway included.

The cancer health risk impacts in **Table 5-23** above shows that the significance threshold for maximally exposed individual resident and maximally exposed individual worker will not be exceeded. There is no significance threshold for cancer risk at the point of maximum impact.

Table 5- 24 - Summary of Maximum Chronic Non-Cancer Health Risk Impacts

Receptor	Chronic HI	Significance Threshold	Receptor Number	UTME (meters)	UTMN (meters)
Offsite PMI	0.51	N/A	197	748126.34	3856562.94
MEIR	0.073	> 1	3765	750749.65	3856282.19
MEIW	0.005	> 1	3799	746553.9	3857885.18

Definitions:

PMI = Point of Maximum Impact
MEIR = Maximally Exposed Individual Resident
MEIW = Maximally Exposed Individual Worker
HI = Hazard Index
UTME = Universal Transverse Mercator Easting Coordinate (World Geodetic System 1984 Zone 10 North)
UTMN = Universal Transverse Mercator Northing Coordinate (World Geodetic System 1984 Zone 10 North)

The chronic non-cancer health risk impacts in **Table 5-24** above shows that the significance threshold for maximally exposed individual resident and maximally exposed individual worker will not be exceeded. There is no significance threshold for chronic non-cancer risk at the point of maximum impact.

Table 5- 25 - Summary of Maximum Acute Non-Cancer Health Risk Impacts

Receptor	Acute HI	Significance Threshold	Receptor Number	UTME (meters)	UTMN (meters)
Offsite PMI	0.53	> 1	2151	747780.17	3857151.89
MEIR	0.12	> 1	3750	748145.39	3856035.93
MEIW	0.07	> 1	3799	746553.9	3857885.18

Definitions:

PMI = Point of Maximum Impact
MEIR = Maximally Exposed Individual Resident
MEIW = Maximally Exposed Individual Worker
HI = Hazard Index
UTME = Universal Transverse Mercator Easting Coordinate (World Geodetic System 1984 Zone 10 North)
UTMN = Universal Transverse Mercator Northing Coordinate (World Geodetic System 1984 Zone 10 North)

The acute non-cancer health risk impacts in **Table 5-25** above shows that the significance threshold for point of maximum impact, maximally exposed individual resident, and maximally exposed individual worker will not be exceeded.

Table 5-26 - Summary of Maximum 8-Hour Chronic Non-Cancer Health Risk Impacts

Receptor	8-Hour Chronic HI	Significance Threshold	Receptor Number	UTME (meters)	UTMN (meters)
Offsite PMI	0.083	N/A	196	748174.98	3856563.76
MEIR	0.0035	> 1	3750	748145.39	3856035.93
MEIW	0.0034	> 1	3799	746553.9	3857885.18

Definitions:

PMI = Point of Maximum Impact
MEIR = Maximally Exposed Individual Resident
MEIW = Maximally Exposed Individual Worker
HI = Hazard Index
UTME = Universal Transverse Mercator Easting Coordinate (World Geodetic System 1984 Zone 10 North)
UTMN = Universal Transverse Mercator Northing Coordinate (World Geodetic System 1984 Zone 10 North)

The 8-hour chronic non-cancer health risk impacts in **Table 5-26** above shows that the significance threshold for maximally exposed individual resident and maximally exposed individual worker will not be exceeded. There is no significance threshold for 8-hour chronic non-cancer risk at the point of maximum impact.

Risk Drivers

The highest risk driver for the point of maximum impact, maximally exposed individual resident, and maximally exposed individual worker for cancer, chronic, 8-hour chronic and acute risk are listed in **Table 5-27**. Risk drivers were determined by which pollutant contributed to the greatest risk for the total cancer risk or the highest risk index for chronic, 8-hour chronic and acute risk. Risk drivers are also summarized in **Tables C-21 through C-32 of Attachment C**.

Table 5-27 - Risk Drivers

Receptor	Cancer Risk	Chronic Risk	8-Hour Chronic Risk	Acute Risk
Offsite PMI	Epichlorohydrin	Epichlorohydrin	Benzene	Acrolein
MEIR	PAHs	Arsenic	Benzene	Benzene
MEIW	Benzene	Arsenic	Benzene	Hydrogen Sulfide

Definitions:
PMI = Point of Maximum Impact
MEIR = Maximally Exposed Individual Resident
MEIW = Maximally Exposed Individual Worker
PAH = Polycyclic aromatic hydrocarbon

Maps and Aerial Photos

The following maps and aerial photos are included in **Attachment C (Figures C-1 through C-9)**:

- Building (Figure C-1)
- Emission Sources (Figures C-2 and C-3)
- One and ten per Million Cancer Risk Isopleths (Figures C-4 and C-5)
- Acute Non-Cancer Hazard Index Isopleth (Figure C-6)
- 8-hour Chronic Non-Cancer Hazard Index Isopleth (Figure C-7)
- Chronic Non-Cancer Hazard Index Isopleth (Figure C-8)
- Project Boundary Coordinate Points (Figure C-9)

Significance Finding

The potential health risk attributable to the Project is determined to be *less than significant* based on the following conclusions:

1. Potential carcinogenic risk from the Project is *below* the significance level of ten in a million cancer risk; and
2. The hazard index for the potential chronic and acute non-cancer risks from the Project is *below* the significance level of 1.0 at each of the modeled receptors.

5.5 IMPACTS TO THE AMBIENT AIR QUALITY

Since the Project will result in an increase of criteria pollutant emissions, dispersion modeling was conducted to analyze the Project impacts.

Source Information

The Ambient Air Quality Impact Analysis consisted of point source releases, volume source releases and two line source releases. The volume source releases were used to model fugitive reactive organic compound emissions. The area of the volume sources were estimated to cover

the anticipated area that components will be located. Some areas were represented by multiple smaller volume sources to best cover the anticipated areas of possible leaks since volume sources cannot be angled or modeled as poly-volume sources in AERMOD. Gas service components and oil service components have different average release heights in several modeled areas, therefore, gas service and oil service components were modeled as separate sources in these areas. All components located in the group station and steam generator sites were conservatively modeled using the same release height. The point source releases were used for steam generator stacks, the emergency generator stack, the flare stack, and tank emissions. Stack parameters for the steam generators, the emergency generator, and the flare were taken from manufacturer specifications (Attachment E, Equipment Specifications). Tank emissions and release parameters were input according to Santa Barbara County Air Pollution Control District's Health Risk Assessment modeling guideline's (SBCAPCD 2015) Appendix B. The line sources were used for onsite vehicular travel. Line sources were mapped according to estimated travel routes. **Table D-5 of Attachment D** lists all sources including their AERMOD identification ID, release type, Universe Transverse Mercator coordinates (WGS84 Zone 10 North), and release parameters.

The facility operates 24 hours a day and seven days per week, therefore, all equipment is assumed to operate the same hours as the facility with the exception of emergency equipment. **Table 5-28** below describes the operating schedule of the emergency equipment.

Table 5-28 - Operating Schedule for Flare and Emergency Generator

Source	AERMOD ID	Hours/day	Hours/Year	Days/Week	Weeks/Year
Flare	STCK16	1.5	180	Varies	Varies
Emergency Generator	STCK14	24	600	Varies	Varies

The worst case emergency flaring scenario was also included in the ambient air quality model. This scenario increased the flare's sulfur dioxide hourly, 3- hour and daily emissions over typical operating schedule shown in **Table 5-28**. The worst case emergency flaring scenario would occur due to a control failure or blockage in flow path of produced gas through gas sweetening vessels. Diverted gas to the flare will be a blend of produced gas and make-up gas with an expected hydrogen sulfide concentration of 10,000 parts per million by volume. This would result in five minutes of flaring resulting in expected flow of 736 standard cubic feet per day and 1.32 pounds of sulfur dioxide emissions.

Emission Quantification

Criteria pollutant emissions were calculated in **Section 5.2** of this application. **Table D-1 through Table D-4 of Attachment D** display the emissions of each criteria pollutant for each source used in the Ambient Air Quality Impact Analysis.

Meteorological Data

The meteorological data utilized in the Ambient Air Quality Impact Analysis was obtained from the Santa Barbara County Air Pollution Control District's website. The Santa Maria Airport meteorological data was used as it was closest to the Project site and a better representation to

the meteorological conditions in the Project area. The Santa Maria Airport meteorological data includes the years from 2010-2014.

Air Dispersion Model

The most recent version of Environmental Protection Agency's AMS/EPA Regulatory Model - AERMOD (recompiled for the Lakes ISC-AERMOD View interface version AERMOD_15181) was used to predict the dispersion of emissions from the Project. Regulatory default options were selected using rural dispersion and elevated terrain. Building Profile Input Program was run to calculate building downwash for stacks near buildings and tanks. **Table D-10 of Attachment D** lists all the heights and Universe Transverse Mercator coordinates (WGS84 Zone 10 North) for all structures included in the calculations for building downwash. The following modeling files have been included electronically (only):

- Surface Met Data File (SMX10-14.sfc)
- Profile Met Data File (SMX10-14.pfl)
- Digital Elevation Map Files
    - Foxen Canyon (9030_75m.dem)
    - Sisquoc (9030_75m.dem)
    - Tepusquet Canyon (8934_75m.dem)
    - Twichell Dam (9030_75m.dem)
- AERMAP Source File (AAQCEQA.sou)
- AERMAP Receptor File (AAQCEQA.rou)
- AERMAP Output File (MAPDETAIL.out and MAPPARAMS.out)
- BPIP Input File (AAQCEQA.bpi)
- BPIP Summary File (AAQCEQA.sum)
- BPIP Output File (AAQCEQA.pro)
- AERMOD Input File (AAQCEQA.adi)
- AERMOD Output File (AAQCEQA.ado)
- AERMOD Error File (AAQCEQA.err)
- Plotfiles (example: 01H1G001.plt)

Receptors

A total of 3,836 receptors were analyzed for the Ambient Air Quality Impact Analysis which included 354 property boundary receptors, 48 residential receptors, four worker receptors, 33 road receptors, two Class I receptors and 3,395 grid receptors. Individual residential and worker receptors are not necessary for an Ambient Air Quality Impact Analysis, however, the same receptor grid was used for both the Ambient Air Quality Impact Analysis and Health Risk Assessment for consistency purposes. All receptors were modeled with a flagpole height of 0.0 meters. **Table D-11 of Attachment D** lists all modeled receptors and their Universe Transverse Mercator coordinates (WGS84 Zone 10 North).

Dispersion Modeling Results

Criteria pollutant emissions rates in grams per second provided in **Tables D-6 and D-9** of **Attachment D** were modeled in a multi-chemical run using AERMOD. AERMOD generated concentrations and plot files for each pollutant and averaging period. Background concentrations were also added to calculated concentrations when comparing results to ambient air quality standards. **Tables D-7 and D-8** of **Attachment D** provide the maximum modeled concentrations, background concentrations, and total concentration for each averaging period.

Ambient Air Quality Impact Assessment Results

The results of the air dispersion modeling (**Table D-7 and D-8 of Attachment D**) are tabulated below. The Project impacts were compared to the incremental increase significant thresholds listed in Santa Barbara County Air Pollution Control District Rule 803 to verify that the Project would not violate any incremental increase standards. **Table 5-29** compares the predicted Project concentrations at the nearest Class I area, San Rafael Wilderness, versus the Class I maximum allowable increase standards.

Table 5-29 - Project Impacts on Class I Area Vs. Maximum Allowable Increase

Pollutant	Averaging Period	Project ($\mu g/m^3$)	Class I Maximum Allowable Increase ($\mu g/m^3$)	Below Applicable Standard(s)
Oxides of nitrogen	1-hour	9.24	10	Yes
	Annual	0.01	2.5	Yes
Total Suspended Particulate	24-hour	0.13	10	Yes
	Annual	0.007	5	Yes
Oxides of sulfur	3-hour	1.36	25	Yes
	24-hour	0.15	5	Yes
	Annual	0.008	2	Yes
Carbon monoxide	1-hour	34.03	800	Yes
	8-hour	2.33	200	Yes
Particulate matter up to 10 microns in diameter	24-hour	0.13	8	Yes
	Annual	0.007	4	Yes
Particulate matter up to 2.5 microns in diameter	24-hour	0.13	8	Yes
	Annual	0.007	4	Yes
Reactive Organic Compounds	3-hour	1.86	3	Yes
Definitions: $\mu g/m^3$ = micrograms per cubic meters				

The Project impacts were combined with background concentrations to verify that the Project would not contribute to violations of the Ambient Air Quality Standards. **Table 5-30** compares the predicted Project concentrations at the facility boundary and combines those results with the available background concentrations versus the ambient air quality standards.

Table 5-30 - Cumulative Impacts Vs. Ambient Air Quality Standards

Pollutant	Averaging Period	Background ($\mu g/m^3$)	Project ($\mu g/m^3$)	Project + Background ($\mu g/m^3$)	NAAQS ($\mu g/m^3$)	CAAQS ($\mu g/m^3$)	Below Applicable Standard(s)
Oxides of nitrogen	1-hour	92.17	57.3	149.45	188.68	338	Yes
	Annual	14.42	0.44	14.87	100	56	Yes
Oxides of sulfur	1-hour	13.09	33.4	46.45	196	655	Yes
	24-hour	5.236	1.96	7.20	---	105	Yes
	Annual	2.33	0.29	2.62	80 [1]	---	Yes
Carbon monoxide	1-hour	3,893.00	202.9	4,095.91	40,000	23,000	Yes
	8-hour	1,305.30	23.1	1,328.36	10,000	10,000	Yes
Particulate matter up to 10 microns in diameter	24-hour	76.20	1.68	77.88	150	50	No
	Annual	24.20	0.25	24.45	---	20	No
Particulate matter up to 2.5 microns in diameter	24-hour	17.30	1.68	18.98	35	---	Yes
	Annual	7.00	0.25	7.25	12	12	Yes

Definitions:
$\mu g/m^3$ = micrograms per cubic meters
NAAQS = National Ambient Air Quality Standards
CAAQS = California Ambient Air Quality Standards

Notes:
1. Annual National Ambient Air Quality Standards for sulfur dioxide was revoked.

Table 5-30 above identifies that the Project emission concentrations when combined with the maximum measured background air concentrations used in this analysis which were calculated from measured concentrations at the nearest monitoring stations. The resulting Project impacts do not exceed the ambient air quality standards with the exception of the State particulate matter up to 10 micron 24-hour and annual standards. Although the table identifies an exceedance of a State air quality standard, the District can determine that this Project will not cause or contribute to a violation of an ambient air quality standard. The basis for this determination is the fact that existing ozone and particulate matter up to 10 micron concentrations at the Santa Maria station already exceed the referenced standards, the fact that the localized emissions from this Project will not impact the Santa Maria station, and the fact that the Santa Barbara Air Pollution Control District is implementing an attainment plan that will reduce background emissions to below the State standard. Therefore, the Project as proposed complies with the Ambient Air Quality Standard provisions of Rule 803.

Table 5-31 below compares the Project particulate matter up to ten micron impacts with the applicable Prevention of Significant Deterioration threshold.

Table 5-31 - Comparison of Maximum Modeled Project Impact with Significance Thresholds

Pollutant	Averaging Period	Predicted Concentration ($\mu g/m^3$)	Prevention of Significant Deterioration ($\mu g/m^3$)
Particulate matter up to 10 microns in diameter	24-hour	1.68	5
	Annual	0.25	1
Definitions: $\mu g/m^3$ = micrograms per cubic meters			

As can be seen the Project will not exceed the 24-hour or annual significance thresholds for particulate matter up to ten microns; therefore, Best Available Control Technology for Prevention of Significant Deterioration purposes is not required for this Project.

6.0 CUMULATIVE IMPACTS

Santa Barbara County Air Pollution Control District under California Environmental Quality Act defines cumulative impacts as two or more individual effects which, when considered together, are considerable or which compound or increase other environmental impacts. Based on the analysis conducted for this Project, the Project is individually *significant* for unmitigated criteria pollutant emissions from long-term operations and unmitigated greenhouse gas impacts. This Air Quality Impact Analysis, however, also considered impacts of the proposed Project along with the impacts of other projects previously proposed in the area. Cumulative ozone Impacts (reactive organic gases and nitrogen oxides) were considered from numerous sources within the region including transport from outside the region. Ozone is formed through chemical reactions of reactive organic gases and nitrogen oxides in the presence of sunlight.

CUMULATIVE REGIONAL AIR QUALITY IMPACTS

The most recent, certified South Central Coast Air Basin Emission Inventory data available from the California Air Resources Board is based on data gathered for the 2012 annual inventory. This data will be used to assist the Santa Barbara County Air Pollution Control District in demonstrating attainment of Federal 1-hour ozone Standards. **Table 6-1** provides a comparative look at the impacts proposed by the subject Project to the South Central Coast Air Basin Emissions Inventory and the Santa Barbara County portion of the South Central Coast Air Basin.

Table 6-1 - Project Emissions Relative to 2012 Emission Inventory for South Central Coast Air Basin

Emission Sources	Carbon Monoxide Tons/Year	Reactive Organic Gases Tons/Year	Nitrogen Oxides Tons/Year	Sulfur Oxides Tons/Year	Particulate Matter (PM_{10}) Tons/Year	Particulate Matter ($PM_{2.5}$) Tons/Year
Santa Barbara County (South Central Coast Air Basin Portion)	98,404	66,905	9,819	803	10,147	6,716
South Central Coast Air Basin	231,082	163,520	27,302	1,643	26,864	14,126
Proposed Project	57.91	12.39	28.76	5.49	12.01	6.62

Emission Sources	Carbon Monoxide Tons/Year	Reactive Organic Gases Tons/Year	Nitrogen Oxides Tons/Year	Sulfur Oxides Tons/Year	Particulate Matter (PM_{10}) Tons/Year	Particulate Matter ($PM_{2.5}$) Tons/Year
Proposed Project's percent of Santa Barbara County	0.06%	0.02%	0.29%	0.68%	0.12%	0.10%
Proposed Project's percent of South Central Coast Air Basin	0.03%	0.01%	0.11%	0.33%	0.04%	0.05%
Definitions: PM_{10} = particulate matter up to 10 microns in diameter $PM_{2.5}$ = particulate matter of less than 2.5 microns						

Source: California Air Resources Board 2014a

As shown in **Table 6-1** the proposed Project does not pose a significant increase to basin emissions, as such basin emissions would be essentially the same if the Project is approved.

Tables 6-2 through **6-4** provide California Air Resources Board Emissions Inventory projections for the year 2020 for the Santa Barbara County Air Pollution Control District. The proposed Project produces a small portion of the total emissions within Santa Barbara County Air Pollution Control District boundaries.

Table 6-2 - Emission Inventory South Central Coast Air Basin 2020 Projection – Tons per Year

	Reactive Organic Gases	Nitrogen Oxides	Particulate Matter (PM_{10})
Total Emissions	148,044	18,652	27,594
Total Stationary Source Emissions	7,446	2,811	803
Total Area-Wide Source Emissions	9,928	1,022	14,381
Total Mobile Source Emissions	7,446	13,250	1,351
Total Natural Source Emissions	123,224	1,570	11,060
Definitions: PM_{10} = particulate matter up to 10 microns in diameter			
Note: Total may not add due to rounding.			

Source: California Air Resources Board 2014 (www.arb.ca.gov/app/emsinv/2013/emssumcat.php)

Table 6-3 - Emission Inventory South Central Coast Air Basin – Santa Barbara County Portion 2020 Projection – Tons per Year

	Reactive Organic Gases	Nitrogen Oxides	Particulate Matter (PM_{10})
Total Emissions	59,678	6,972	10,220
Total Stationary Source Emissions	3,577	1,497	365
Total Area-Wide Source Emissions	3,212	365	4,015
Total Mobile Source Emissions	2,008	4,453	402
Total Natural Source Emissions	50,881	694	5,439
Definitions: PM_{10} = particulate matter up to 10 microns in diameter			
Note: Total may not add due to rounding.			

Source: California Air Resources Board 2014 (www.arb.ca.gov/app/emsinv/2013/emssumcat.php)

Table 6-4 - 2020 Emissions Projections – Proposed Project and Santa Barbara County Air Pollution Control District – Tons per Year

	Reactive Organic Gases	Nitrogen Oxides	Particulate Matter (PM_{10})
Proposed Project	**12.39**	**28.76**	**12.01**
Santa Barbara County	59,678	6,972	10,220
South Central Coast Air Basin	148,044	18,652	27,594
Proposed Project Percent of Santa Barbara County	0.02%	0.41%	0.12%
Proposed Project Percent of South Central Coast Air Basin	0.01%	0.15%	0.04%
Definitions: PM_{10} = particulate matter up to 10 microns in diameter			
Notes: The emission estimates for Santa Barbara County and the South Central Coast Air Basin are based on 2020 projections. The Proposed Project emission estimates are for the proposed emissions that are not already included in the South Central Coast Air Basin Emissions Inventory. Project emissions are based on the worst case year emissions estimates to present the most conservative comparison. The Project's emissions are expected to decline as cleaner, less polluting vehicles replace vehicles with higher emissions.			

Source: California Air Resources Board 2014 (www.arb.ca.gov/app/emsinv/2013/emssumcat.php)

As shown above, the proposed Project would pose no substantial impact on regional ozone and particulate matter up to 10 microns in diameter formation. The regional contribution to these cumulative impacts would be negligible. It is reasonable to conclude that the Project is not considered cumulatively significant with regard to particulate matter up to 10 microns in diameter and regional ozone precursors, including reactive organic gases and nitrogen oxides impacts based on evaluation of the regional emission inventory.

CUMULATIVE LOCALIZED AIR QUALITY IMPACTS

A review of a cumulative project lists provided by the Santa Barbara County and Santa Barbara County Air Pollution Control District indicates that there are 16 other cumulative oil and gas projects in Santa Barbara County (**Table 6-5**) and 117 cumulative developments projects in north Santa Barbara County (**Table 6-6**).

The listings provided below in **Tables 6-5 and 6-6** is only a geographical reference to demonstrate the construction activity in the Project vicinity.

Table 6-5 - Cumulative Oil and Gas Projects in the Project Vicinity

Case Number	Project Name	Assessor's Parcel Number	Area	Description	Permit Status	Type	Filed
09PPP-00000-00002	Santa Maria Energy ODPP	101020074	San Antonio Creek	136 wells, 3-mile oil line	Approved	Production Plan	11/12/2009
06PPP-00000-00001	Cimarex Oil Production Plan	113190001	Santa Maria	2 exploratory wells	Approved	Production Plan	5/9/2006

Case Number	Project Name	Assessor's Parcel Number	Area	Description	Permit Status	Type	Filed
08PPP-00000-00001	Rock Energy Oil & Gas Production Plan	129100014	Santa Maria		Under Construction	Production Plan	6/5/2008
09PPP-00000-00001	Underground Energy Production Plan	133080005	Santa Maria	26 wells	Approved	Production Plan	9/23/2009
10PRE-00000-00013	ERG -Fugler Lease	101040017	Santa Maria	20 wells	Proposed	Preapplication	12/21/2010
11PPP-00000-00001	North Garey ODPP	129180007	Santa Maria	56 wells	In Process	Production Plan	5/31/2011
05PPP-00000-00001	Breitburn Production Plan	101020041	Santa Maria	96 wells	Under Construction	Production Plan	7/1/2005
11PRE-00000-00013	ERG Resources-Los Alamos Fee	101070001	Santa Maria		In Process	Preapplication	8/1/2011
11PRE-00000-00017	Petrorock, LLC - Schopp Lease	128100027	Santa Maria		In Process	Preapplication	8/15/2011
11PRE-00000-00020	Amrich Energy - Tognazzini-Adams Lease	113110001	Santa Maria		In Process	Preapplication	9/20/2011
11PRE-00000-00021	ERG - Gwinn Fee Lease	101070003	Santa Maria	4 wells	In Process	Preapplication	11/22/2011
10PRE-00000-00011	ERG Resources, LLC Pre-	101040006	Santa Maria	20 Wells	Proposed	Preapplication	12/9/2010
11PRE-00000-00003	Amrich Energy - Hansen Lease	113270006	Santa Maria	4 Wells	Proposed	Preapplication	2/9/2011
11PRE-00000-00007	ERG Resources - global warming	129180013	Santa Maria	6 Wells	Proposed	Preapplication	6/3/2011

Case Number	Project Name	Assessor's Parcel Number	Area	Description	Permit Status	Type	Filed
12DVP-00000-00005	ERG Foxen Pipeline	129180015	Santa Maria	2.9 Mile Oil Pipeline	In Process	Development Plan	6/18/2012
11PRE-00000-00002	ERG Resources - Pinal Lease	101020078	Santa Maria	2 Wells	Proposed	Preapplication	1/18/2011

Source: Santa Barbara County 2014

Table 6-6 - Cumulative Land Development Projects in North Santa Barbara County

Case Number	Project Name	Res Units	Comm. sf	Ind. sf	Ag Dev sf	Misc.
03CUP-00000-00059	VENTUCOPA ROCK PLANT EXPANSION					400,000 tons
05TPM-00000-00023	DEITRICH LOT SPLIT (TPM 14,689)	2				
08TPM-00000-00014	RUSSELL RANCH LOT SPLIT (TPM 14,756)	2				
03TRM-00000-00003	CLUBHOUSE ESTATES TRACT MAP (TM 14,629)	52				
07DVP-00000-00016	SCOGGIN/SUNDHEIM WINERY TIER II				20,000	
10RVP-00000-00048	SEPULVEDA BLDG MATERIALS MINING					2,000 tons/year
11CUP-00000-00018	SANFORD WINERY REVISION					Special events
11PRE-00000-00022	ARCHDIOCESE QUEEN OF ANGLES	4				
02TPM-00000-00011	SILVERADO PREMIUM PROPERTIES TPM	4				
06TRM-00000-00002	RANCHO LA LAGUNA TRACT MAP 14,709	13				
07TPM-00000-00010	CARRARI LOT SPLIT (TPM 14,733)	3				
10TPM-00000-00007	NOLAN AG REPLACEMENT CONTRACT/ TPM 14,775	2				
02TRM-00000-00007	LEGACY ESTATES TRACT MAP	59				
05TRM-00000-00006	JACKSON TRACT MAP 14,690	6				
06TPM-00000-00026	ALAMO TRUST LOT SPLIT (TPM 14,717)	2				
07TPM-00000-00007	ALAMOS FOXEN LLC (TPM 14,728)	2				
07TPM-00000-00009	ALMADA LOT SPLIT (TPM 14,731)	2				

Case Number	Project Name	Res Units	Comm. sf	Ind. sf	Ag Dev sf	Misc.
09CUP-00000-00026	HELGELAND MIXED USE BUILDING	5				
09LLA-00000-00006	SCHMIDT LOT LINE ADJUSTMENT	3				
10PRE-00000-00010	THE CHILDREN'S PROJECT ACADEMY	56				
11LUP-00000-00148	ROSEMARY COMMONS	9				
11LUP-00000-00149	SAGEBRUSH JUNCTION	8	5,600			
06DVP-00000-00009	OSR ENTERPRISES/NRG ENTERPRISES LP				237,636	
06DVP-00000-00013	HIN DEVELOPMENT PLAN			9,750		
06TPM-00000-00019	OSR/NRG ENTERPRISES (TPM 14,707)	3				
07DVP-00000-00004	JOHNSON TRUCK SERVICE CENTER			7,200		
07DVP-00000-00010	DORE WINERY				22,509	
07DVP-00000-00013	RIVERBENCH WINERY				2,730	
07GPA-00000-00011	NORTH COUNTY JAIL GENERAL PLAN AMENDMENT					250,465
08DVP-00000-00007	PLANTEL NURSERIES				972,720	
08DVP-00000-00032	ARC VINEYARDS WINERY				40,180	
08CUP-00000-00074	ARC VINEYARDS EMPLOYEE DWELLINGS	4				
08TPM-00000-00003	OVERHOLTZER LOT SPLIT (TPM 14,744)	2				
08TPM-00000-00012	RANCHO REAL LLC LOT SPLIT (TPM 14,752)	4				
10DVP-00000-00016	ADAM BROS FARMING				100,000	
10PRE-00000-00007	GRAYSON SERVICE PREAPPLICATION					Steam generation
10TPM-00000-00004	AQUISTAPACE TENTATIVE PARCEL MAP (TPM 14,772)	2				
10TPM-00000-00005	GREKA LAND HOLDINGS TENTATIVE PARCEL MAP (TPM 14,773)	2				
11DVP-00000-00012	COASTAL GROWERS SUPPLY STORAGE		7,500			
11DVP-00000-00013	SIERRA MADRE RANCH WINERY		10,602			
11DVP-00000-00014	'F' STREET DEVELOPMENT PLAN - 3		5,500			
11DVP-00000-00015	'F' STREET DEVELOPMENT PLAN - 4		5,500			

Case Number	Project Name	Res Units	Comm. sf	Ind. sf	Ag Dev sf	Misc.
06DVP-00000-00016	ORCUTT UNION PLAZA/WILL COMMERCIAL		66831			
06TPM-00000-00014	GAYDA LOT SPLIT (TPM 14,703)	3				
09GPA-00000-00004	KEY SITE 17 GENERAL PLAN AMENDMENT	257				
10LUP-00000-00461	VAN VEEN MIXED USE BUILDING		8,601			
10TPM-00000-00001	BROADWAY & UNION MERCANTILE	2				
00TRM-00000-06003	OAK GLEN DEVELOPMENT	52				
01CUP-00000-00115	ORCUTT AQUACENTER		31,074			
02NEW-00000-00053	LEO EVANS-NORTHPOINTE	32				
02TRM-00000-00010	ADDAMO WINERY/DIAMANTE	5				
03DVP-00000-00009	RICE RANCH DEVELOPMENT PLAN	725				
03TPM-00000-00008	DANIELS LOT SPLIT	2				
03TRM-00000-00001	FETYKO TRACT MAP	18				
04TPM-00000-00010	BURINDA LOT SPLIT	2				
04TPM-00000-00013	MENDOZA LOT SPLIT	2				
05SPP-00000-00002	ENGLISH-JOSEPH SPECIFIC PLAN	30	56,800			
05TPM-00000-00015	MEYER LOT SPLIT	2				
05TPM-00000-00018	TREUR LOT SPLIT	2				
05TRM-00000-00004	WILKS TRACT MAP 14,681	3				
06DVP-00000-00008	ORCUTT MARKETPLACE		320,663			
06GPA-00000-00016	KEY SITE 3 GENERAL PLAN AMENDMENT	316				
06TPM-00000-00003	CONLEY LOT SPLIT (TPM 14,693)	3				
06TPM-00000-00022	HOPE COMMUNITY CHURCH (TPM 14,711)	3				29,373
06TPM-00000-00024	CHALOUPKA LOT SPLIT (TPM 14,714)	2				
07DVP-00000-00009	PR INVESTMENTS/EVERGREEN SHOPPING		61,958			
07DVP-00000-00020	ST JOSEPH DEVELOPMENT PLAN					111,396
07DVP-00000-00026	ST LOUIS DE MONTFORT CHURCH					49,666

Case Number	Project Name	Res Units	Comm. sf	Ind. sf	Ag Dev sf	Misc.
07TRM-00000-00004	ORCUTT MARKETPLACE TRACT MAP	12				
08TPM-00000-00013	HAWKINS LOT SPLIT (TPM 14,754)	2				
08TRM-00000-00001	HUMMEL VILLAGE II AIRSPACE CONDOS	20				
09DVP-00000-00029	CLARK AVENUE COMMERCIAL		12,875			
09NGD-00000-00014	CHALOUPKA NEGATIVE DEC	1				
10DVP-00000-00002	KEY SITE 30 DEVELOPMENT PLAN	69				
10GPA-00000-00006	REVISED RICE RANCH General Plan Amendment 2011					
10TRM-00000-00002	KNOLLWOOD TENTATIVE TRACT MAP	195				
10TRM-00000-00003	TERRACE VILLAS TRACT MAP 14,770	16				
11CUP-00000-00003	PRIMROSE SPECIAL CARE FACILITY					Residential care facility
11TPM-00000-00003	RICHARDSON TENTATIVE PARCEL MAP	4				
01TPM-00000-00006	THOMSON PARCEL MAP 14,568	3				
06TPM-00000-00020	RANCHO ENCANTADO (TPM 14,708)	3				
03TPM-00000-00010	MARCELINO SPRINGS (TPM 14,630)	3				
04TPM-00000-00002	KASLOW LOT SPLIT	2				
04TPM-00000-00007	KARAS LOT SPLIT (TPM 14,653)	3				
05CUP-00000-00033	VALLEY SAND AND SOIL REVISION					14,500 cy/yr
05RPP-00000-00001	VALLEY SAND AND SOIL REVISION					reclamation
06TPM-00000-00001	STULL LOT SPLIT (TPM 14,691)	2				
06TPM-00000-00004	COFFEY LOT SPLIT (TPM 14,633)	2				
06TPM-00000-00012	MAGALI FARMS LOT SPLIT (TPM 14,701)	3			58,280	
06TPM-00000-00015	RICCI LOT SPLIT (TPM 14,704)	2				
06TPM-00000-00021	MCCOMBS LOT SPLIT (TPM 14,710)	2				
06TPM-00000-00028	HIGGINS/MARTINO LOT SPLIT (TPM 14,720)	2				
06TPM-00000-00029	LORENZEN LOT SPLIT (TPM 14,721)	2				
06TPM-00000-00030	MEYER LOT SPLIT (TPM 14,722)	2				

Case Number	Project Name	Res Units	Comm. sf	Ind. sf	Ag Dev sf	Misc.
07TPM-00000-00002	EBEJER LOT SPLIT (TPM 14,723)	2				
08DVP-00000-00018	DE WERD TIER II WINERY				9,856	
08LUP-00000-00117	ECLYPSE WINERY				1,636	
03CUP-00001-00024	GRANITE MINING REVISION					250,000 tons/year
08TPM-00000-00004	SKYTT FAMILY LOT SPLIT (TPM 14,745)	4				
08TPM-00000-00006	AMON LOT SPLIT (TPM 14,746)	2				
08TPM-00000-00010	SIERRA GRANDE LOT SPLIT (TPM 14,748)	2				
08TPM-00000-00017	HANSON TENTATIVE PARCEL MAP	2				
08TRM-00000-00003	ESTELLE VINEYARD ESTATES TRACT	11				
08TRM-00000-00005	HAAS TRACT MAP (TM 14,753)	8				
09DVP-00000-00019	INN AT MATTEI'S TAVERN		37,200			
09DVP-00000-00034	VINCENT VINEYARDS & WINERY TIER III				5,918	
09DVP-00000-00035	TTT VINEYARDS WINERY		4,945			
09TPM-00000-00002	TURNBULL TENTATIVE PARCEL MAP	3				
09TPM-00000-00005	GAVLAK LOT SPLIT (TPM 14,765)	2				
10AMD-00000-00008	BUELLFLAT ROCK COMPANY AMENDMENT					Mining operation
10DVP-00000-00007	LARNER TIER II WINERY		11,000			
10CUP-00000-00036	SANTA YNEZ VALLEY AIRPORT		28,000			
10PRE-00000-00003	SANTA YNEZ VALLEY SENIOR HOUSING	22				
10TPM-00000-00002	BAR Z LOT SPLIT (TPM 14,767)	2				
11DVP-00000-00009	CLAXTON WINERY		19,818			
11LLA-00000-00009	DREYFUSS LOT LINE ADJUSTMENT	2				
11RVP-00000-00014	BRIDLEWOOD DEVELOPMENT PLAN REVISION		7,662		1,595	

Source: Santa Barbara County 2014

None of the projects in the above cumulative project lists (**Tables 6-5 and 6-6**) would be built in the immediate vicinity of the Project; therefore, there would be no operational localized impacts associated with cumulative projects and criteria pollutant emissions. Operational

regional impacts from criteria pollutants could be produced; however, as multiple projects would emit into the same air basin at the same time. Additionally, no cumulative significance thresholds are shown since no cumulative thresholds have been established by the Santa Barbara County Air Pollution Control District, California Air Resources Board or other regulatory authority. These projects represent all known and reasonably foreseeable projects in the area. Air quality impacts from cumulative development could be cumulatively significant because the air basin is in nonattainment for several criteria pollutants (See **Table 4-1**).

The Project's unmitigated operational impacts would be significant; therefore, the Project's unmitigated cumulative contribution would be cumulatively considerable and would be a significant cumulative impact. To reduce these Project impacts, the Project will implement Mitigation Measures AQ-1 and AQ-2. Even with the Project's impacts reduction with implementation of Mitigation Measures AQ-1 and AQ-2, the Project's operational contribution to cumulative impacts with mitigation would be cumulatively considerable and would be considered *significant*.

7.0 IMPACTS TO GLOBAL CLIMATE CHANGE

GLOBAL CLIMATE CHANGE IMPACTS FROM THE PROPOSED PROJECT

There are a number of factors available for estimating the greenhouse gas emissions. Not all greenhouse gases exhibit the same ability to induce climate change; as a result, greenhouse gas contributions are commonly quantified in carbon dioxide equivalencies. Greenhouse gas emissions were calculated using California Emissions Estimator Model, EMFAC2014, and emission factors from the California Air Resources Board's Mandatory Reporting Rule. Fugitive emissions from stationary sources were conservatively estimated to be 100 percent methane for greenhouse gas purposes. These emissions calculations can be found in **Attachment A** and are the worst case year for combined construction and operational emissions are summarized in **Table 7-1** below.

Table 7-1 - Estimated Annual Mitigated Greenhouse Gas Emissions for Peak Year 2024 (Metric Tons/Year)

Source	Carbon Dioxide Equivalent
Mitigated Construction Emissions (Peak Year)	
Construction Equipment Onsite	5,460.7
Construction Offsite Mobile	348.5
Drilling Equipment Onsite	8,526.7
Drilling Offsite Mobile	308.6
Year 2024 Construction Emissions	**14,644.6**
Mitigated Operational Emissions (Peak Year)	
Mobile (Excluding Tankers)	1,099.4
Mobile Tankers	10,044.8
Stationary Equipment	267,077.9
Indirect: Electrical Generation	30,698.3
Year 2024 Operational Emissions	**308,920**
Peak Year 2024 Total	**323,565**
Santa Barbara County Threshold	1,000
Significant?	Yes

Since this Project exceeds the 1,000 metric tons of carbon dioxide equivalent per year significance threshold, it would be required to "reduce their greenhouse gas emissions to the applicable threshold, where feasible, through onsite reductions and/or offsite reductions programs approved by the County of Santa Barbara" (Santa Barbara County 2015). As the Project emits more than the 25,000 metric tons carbon dioxide equivalent per year California Air Resources Board threshold for the California Air Resources Board's Mandatory Reporting Rule, the Project would be a participant of the California Air Resources Board Cap-and-Trade program. It would be issued emission allowances and would be required to reduce greenhouse gas emissions associated with the proposed Project, and/or purchase additional credits, allowances or offsets.

Mitigation Measure AQ-4

Aera will implement a program to quantify, and where practicable and feasible, to reduce greenhouse gas emissions. Operational stationary and mobile greenhouse gas emissions levels (including achieved reductions) will be quantified and reported to the California Air Resources Board as required. Greenhouse gas emissions exceeding the Santa Barbara County CEQA Greenhouse Gas significance threshold will be reduced, where practicable and feasible, through onsite reductions and/or offsite reduction programs approved by the County. Emissions off-sets or purchases required to satisfy California Assembly Bill 32 requirements will be completed according to the California Air Resource Board Cap-and-Trade Program requirements.

8.0 CONSISTENCY WITH THE SANTA BARBARA COUNTY AIR POLLUTION CONTROL DISTRICT CLEAN AIR PLAN

Consistency with land use and population forecasts in local and regional plans, including the Santa Barbara County Air Pollution Control District's Clean Air Plan, is required under California Environmental Quality Act for all projects. Proposed projects subject to the most recent Clean Air Plan consistency determinations include a wide range of activities such as commercial, industrial, residential, and transportation projects. By definition, consistency with the Clean Air Plan for projects subject to these guidelines means that direct and indirect emissions associated with the Project are accounted for in the Clean Air Plan's emissions growth assumptions and the Project is consistent with policies adopted in the Clean Air Plan. The Clean Air Plan relies primarily on the land use and population projections provided by the Santa Barbara County Association of Governments and California Air Resources Board on-road emissions forecast as a basis for vehicle emission forecasting. The 2013 Clean Air Plan utilized Santa Barbara County Association of Government's growth forecasts, to project population growth and associated air pollutant emissions for all of the Santa Barbara County incorporated and unincorporated areas (Santa Barbara County Air Pollution Control District 2015).

Required Evaluation Guidelines

State California Environmental Quality Act Guidelines and the Federal Clean Air Act (Sections 176 and 316) contain specific references on the need to evaluate consistencies between the proposed Project and the applicable air quality attainment plan for the Project site. To

accomplish this, the California Air Resources Board has developed a three-step approach to determine project conformity with the applicable air quality attainment plan:

1. *Determination that an Air Quality Attainment Plan is being implemented in the area where the project is being proposed*. The Santa Barbara County Air Pollution Control District has implemented its version as an air quality attainment plan, the current, modified, 2013 Clean Air Plan as approved by the California Air Resources Board.
2. *The proposed project must be consistent with the growth assumptions of the applicable* 2013 Clean Plan (Santa Barbara County Air Pollution Control District 2015). The Project emissions appear to be within the emissions inventory for Oil and Gas operations within the Stationary Sources for Santa Barbara County. See **Table 8-1** below.
3. *The project must contain in its design all reasonably available and feasible air quality control measures*. The proposed Project incorporates all applicable policy and rule-required implementation measures that will reduce related emissions including the standard dust and equipment exhaust mitigation measures as included in Mitigation Measures AQ-1a and Mitigation Measures AQ-1b. Further, the Project would comply with all appropriate Santa Barbara County Air Pollution Control District Rules and Regulations.

Figure 8-1 presents an overview of the reactive organic compounds and nitrogen oxide emissions by source in the 2013 Clean Air Plan (Santa Barbara County Air Pollution Control District 2015).

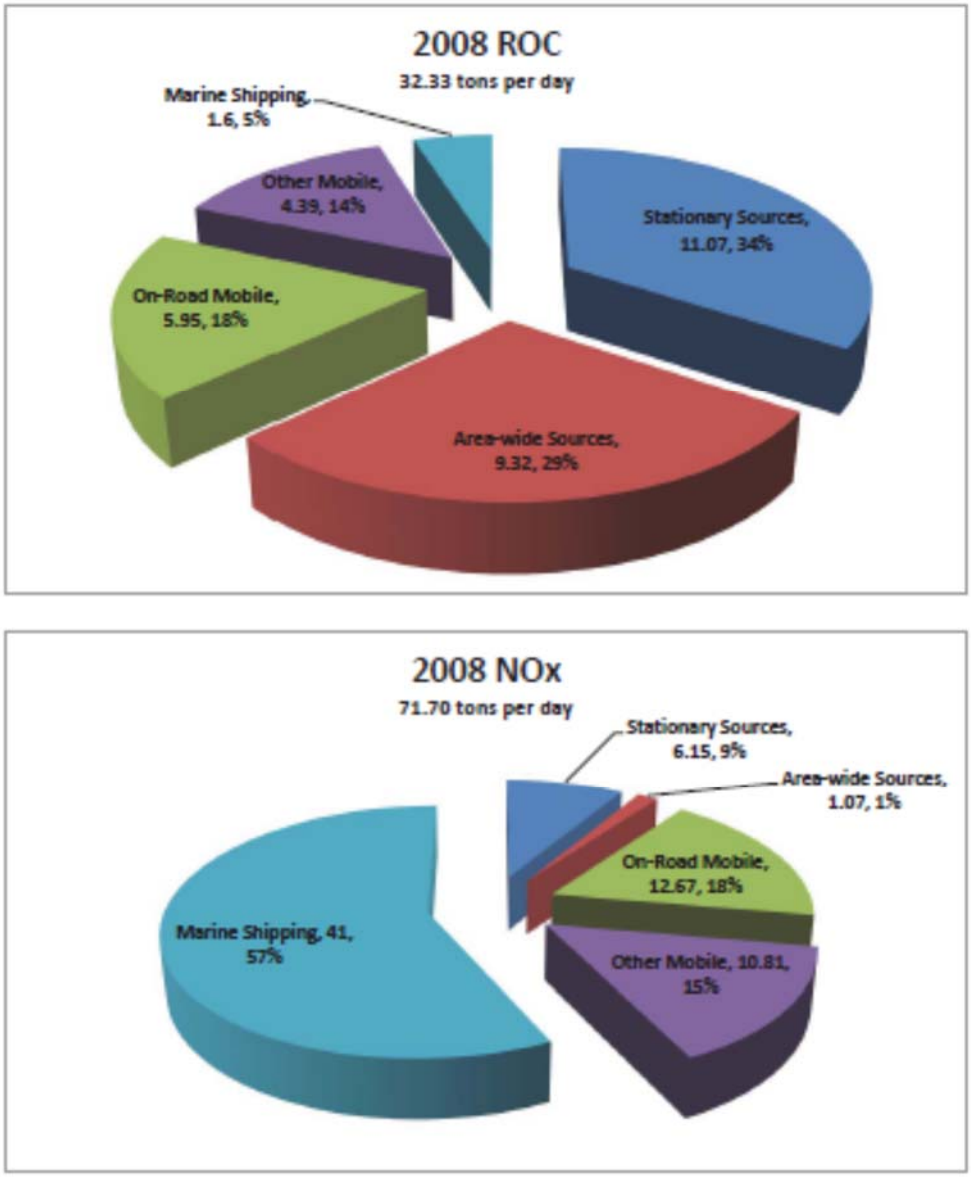

Figure 8-1 - 2013 Clean Air Plan Summary

Table 8-1 excerpts the stationary source emissions and specifically the oil and gas emissions included in the 2013 Clean Air Plan and compares them with the estimated Project stationary source emissions. Based on estimated Project stationary source emissions (from **Table 5-19**), converted from pounds per day into tons per day, the Project's emissions would be found to be 39 percent of reactive organic compounds and 2.6 percent of nitrogen oxides of the oil and gas emissions inventory within the 2013 Clean Air Plan (Santa Barbara County Air Pollution Control District 2015).

Table 8-1 - Evaluation of Project Consistency with 2013 Clean Air Plan

Emission Category	Reactive Organic Compounds (tons/day)	Nitrogen Oxides (tons/day)
Clean Air Plan Stationary Source emissions	11.07	6.15
Clean Air Plan Oil and Gas Emissions	0.1212	1.81
Predicted Project stationary source emissions	0.028	0.059
Project Percent of Oil and Gas Emissions in 2013 Clean Air Plan	23.1%	3.26%
Are Project emissions within 2013 Clean Air Plan estimates?	**YES**	**YES**

Source: Santa Barbara County Air Pollution Control District 2011b, Insight Environmental Consultants 2014.

Santa Barbara County Air Pollution Control District has established scope and content requirements for air quality sections within Environmental Documents (Santa Barbara County Air Pollution Control District 2014b), specifically including a procedure for determining whether a project is inconsistent with the Clean Air Plan. All projects must: 1) include the Santa Barbara County Air Pollution Control District required dust mitigation measures; 2) be in compliance with all appropriate Santa Barbara County Air Pollution Control District Rules and Regulations; and 3) be consistent with the emissions inventory in the Clean Air Plan.

CONSISTENCY FINDING: Because the Project: 1) includes the required dust mitigation measures as part of Mitigation Measure AQ-1a; 2) is in compliance with all Santa Barbara County Air Pollution Control District appropriate Rules and Regulations; and 3) estimates emissions levels that are reasonably within the 2013 Clean Air Plan emission inventory for oil and gas stationary sources; the Project therefore can be found to be consistent with the 2013 Clean Air Plan.

9.0 MITIGATION MEASURES AND RESIDUAL IMPACTS

Air Quality mitigation measures and residual impacts are discussed for each impact separately.

IMPACT AQ-1 (Short-Term Construction Emissions) MITIGATION MEASURES AND RESIDUAL IMPACTS

Mitigation Measure AQ-1

a) During construction, use water trucks or sprinkler systems to keep all areas of vehicle movement damp enough to prevent dust from leaving the site. The Project should water exposed unpaved traffic areas two to three times per day or as needed, and with increasing frequency when wind speed exceeds 15 miles per hour. Reclaimed water should be used if available and practicable. Soil binders may be used instead of water if practical. The amount of disturbed area will be minimized. Vehicle speeds on unpaved roads will be limited to 15 miles per hour or less. If stockpiling of fill material is required, soil stockpiled for more than two days will be covered, kept moist, or treated with soil binders to mitigate dust generation. Trucks transporting fill material to and from the site will be covered with a tarp from the point of origin. Gravel pads or shakers will be installed at external access points to prevent tracking mud onto public roads. After clearing, grading, earth moving, or excavation is completed, disturbed areas will be watered, re-vegetated, or otherwise controlled to mitigate dust generation.

b) All non-exempt portable diesel-powered construction equipment will be registered with the state's portable equipment registration program OR will obtain a Santa Barbara County Air Pollution Control District permit. Fleet owners of mobile construction equipment are subject to the California Air Resource Board Regulation for In-use Off-road Diesel Vehicles (Title 13 California Code of Regulations, Chapter 9, § 2449), the purpose of which is to reduce diesel particulate matter and criteria pollutant emissions from in-use (existing) off-road diesel-fueled vehicles. For more information, please refer to the California Air Resources Board website at www.arb.ca.gov/msprog/ordiesel/ordiesel.htm. All commercial diesel vehicles are subject to Title 13, § 2485 of the California Code of Regulations, limiting engine idling time. Idling of heavy-duty diesel construction equipment and trucks during loading and unloading will be limited to five minutes; electric auxiliary power units will be used whenever possible.

c) Diesel construction equipment will meet the California Air Resources Board Tier 4 Final emission standards for off-road heavy-duty diesel engines

RESIDUAL IMPACTS OF AQ-1a, AQ-1b and AQ-1c

Emission reductions achieved through the implementation of Mitigation Measures AQ-1a, AQ-1b and AQ-1c would reduce fugitive dust and criteria air pollutant emissions during the short-term construction phase to less than significant levels with implementation of these mitigation measures. There could potentially be secondary water supply impacts from the use of water for dust control; it has been found that recycled or grey water or soil stabilizers could be used for

dust control applications and therefore would have no significant residual impacts on water supply. There could potentially be secondary energy generation impacts in the manufacturing new Tier 4 engines and equipment; these engines are designed to reduce criteria air pollutants and greenhouse gas emissions, which would be expected to off-set any additional energy consumed in manufacturing of these new technologies. There would therefore be no residual or secondary impacts from Mitigation Measures AQ-1a, AQ-1b and AQ-1c.

IMPACT AQ-2 (Long-Term Operations Emissions) MITIGATION MEASURES AND RESIDUAL IMPACTS

Mitigation Measure AQ-2

a) Aera will deploy and maintain a tanker truck fleet consisting of three years old or younger truck engines by replacing older trucks with newer trucks whenever they reach the three year threshold.

b) In accordance with Santa Barbara County and Santa Barbara County Air Pollution Control District requirements, Aera will provide the required emission reduction credits for stationary source pollutants.

c) Emissions will be mitigated to less than significant or to the greatest extent feasible, if less than significant cannot be achieved.

RESIDUAL IMPACTS OF AQ-2a and AQ-2b

Emission reductions achieved through the implementation of Mitigation Measures AQ-2a and AQ-2b, would reduce fugitive dust and criteria air pollutant emissions during the long-term Project operations. There could potentially be secondary energy generation impacts in the manufacturing new engines and equipment; these engines are designed to reduce criteria air pollutants and greenhouse gas emissions, which would be expected to off-set any additional energy consumed in manufacturing of these new technologies. There would therefore be no residual or secondary impacts from Mitigation Measures AQ-2a and AQ-2b.

IMPACT AQ-3 (Odors) MITIGATION MEASURES AND RESIDUAL IMPACTS

Mitigation Measure AQ-3

a) In order to mitigate odor releases from tanks due to hatch release, Aera will set up the vapor recovery system to notify the operator when the tank pressure is within ten percent of the tank relief pressure. Additionally, personal hydrogen sulfide monitors and wind socks that will be deployed onsite for employee safety will further mitigate the risk of objectionable odors leaving the Project site.

b) The operator will develop an Odor Minimization Plan which will address potential odors from oil field equipment and measures to reduce or eliminate these odors. The Plan will address issues such as facility information, buffer zones, signs with contact information, logs of odor complaints, protocol for handling odor complaints and odor event investigation and methods instituted to prevent re-occurrence.

RESIDUAL IMPACTS OF AQ-3a and AQ-3b

Implementing these mitigation measures would reduce the potential likelihood and frequency of odor events that have resulted in odor complaints and notice of violations at other oilfields in the past. Although odor events could still occur, the number of odor events would likely be substantially reduced with mitigation as proposed. Therefore, impacts from odors would be reduced to *less than significant*.

IMPACT AQ-4 (greenhouse gas Emissions) MITIGATION MEASURES AND RESIDUAL IMPACTS

Mitigation Measure AQ-4

Aera will implement a program to quantify, and where practicable and feasible, to reduce emissions. Operational stationary and mobile greenhouse gas emissions levels (including achieved reductions) will be quantified and reported to the California Air Resources Board as required. Greenhouse gas emissions exceeding the Santa Barbara County CEQA Greenhouse Gas significance threshold will be reduced, where practicable and feasible, through onsite reductions and/or offsite reduction programs approved by the County. Emissions off-sets or purchases required to satisfy California Assembly Bill 32 requirements will be completed according to the California Air Resource Board Cap-and-Trade Program requirements.

RESIDUAL IMPACTS OF AQ-4

Implementation of Mitigation Measures AQ-4 would reduce the impact of the Project's estimated greenhouse gas emissions through a combination of onsite/offsite reductions, the purchase of offset credits, and the participation in California Air Resources Board's Cap-and-Trade program in order to comply with Santa Barbara County's Greenhouse Gas threshold; therefore, the Project's impact on Greenhouse Gases would be reduced to *less than significant*.

10.0 REFERENCES

American Industrial Hygiene Association (AIHA), 1989. ODOR Thresholds for Chemicals with Establish Occupational Health Standards.

American Petroleum Institute (API). 2004. Compendium of Greenhouse Gas Emissions Methodologies for the Oil and Gas Industry, February 2004.

Association of Environmental Professionals (AEP). 2007. Recommendations by the AEP on How to Analyze the Greenhouse Gas Emissions and Global Climate Change in California Environmental Quality Act Documents. White Paper. March 2007.

California Air Pollution Control Officers Association. 2008. "California Environmental Quality Act and Climate Change," January 2008. Evaluating and Addressing Greenhouse Gas Emissions from Projects Subject to the California Environmental Quality Act.

California Air Resources Board. 2014a. Background data research: attainment status, monitoring data, emissions data, Website accessed by Valerie Rosenkrantz, July – August 2014. http://www.arb.ca.gov/html/ds.htm

--------. 2014b. California Greenhouse gas Emission Inventory 2014 Edition. California Greenhouse Gas Emissions for 2000 to 2012 – Trends of Emissions and Other Indicators. http://www.arb.ca.gov/cc/inventory/data/misc/ghg_inventory_trends_00-12_2014-05-13.pdf

--------. 2013. Draft 2010 California Toxics Inventory (CTI) Summary Table (November 2013). http://www.arb.ca.gov/toxics/cti/cti.htm

--------. 2011. EMFAC2014. Released September 30, 2011. EMFAC2014 provides emission factors that represent the vehicle fleet, speeds, and environmental conditions associated with a project needed to perform project-level air quality modeling. http://www.arb.ca.gov/msei/msei.htm

--------. 2008. Climate Change Proposed Scoping Plan. October 2008.

--------. 2007. Climate Change: Information Regarding ARB's Climate Change Program Pursuant to 2006 State Assembly Bill 32.

California Energy Commission (CEC). 2006. "California Crude Oil Production and Imports," April 2006. CEC-600-2006-006.

California Environmental Protection Agency, Air Toxics Hot Spots Program Risk Assessment Guidelines – The Air Toxics Hot Spots Program Guidance Manual for the Preparation of Health Risk Assessments, August 2003.

California Environmental Quality Act, Appendix G – Environmental Checklist Form, Final Text. October 26, 1998.

California Office of Environmental Health Hazard Assessment. 1999. Hot Spots Unit Risk and Cancer Potency Values. June 9, 1999. Desert Research Institute (DRI). 2006. http:www.wrcc.dri.edu/cgi-bin/

California Air Pollution Control Officers Association (CAPCOA). 1992. "Air Toxics Hot Spots Program Risk Assessment Guidelines." Revised 1992.

---------. 2006a. California Air Toxics Emission Factors (CATEF) database of Hazardous Air Pollutants. http://www.arb.ca.gov/ei.catef/catef.htm

---------. 2006b. Public Workshop to Discuss Establishing the 1990 Emission Level and the California 2020 Limit and Developing Regulations to Require Reporting of Greenhouse Gas Emissions. Sacramento CA. December 1, 2006.

---------. 2008. "California Environmental Quality Act and Climate Change – Evaluating and Addressing Greenhouse Gas Emissions from Projects Subject to the California Environmental Act," January 2008

---------. 2013. California Emissions Estimator Model, version 2013.2.2, released October 2013.

California Climate Action Registry, 2009. California Climate Action Registry General Reporting Protocol Version 3.1, January 2009.

California Environmental Protection Agency (CalEPA), 2006. CalEPA Climate Action Team Executive Summary. Climate Action Team Report to Governor Schwarzenegger and the California Legislature. Sacramento CA. March 2006.

California Environmental Quality Act. 2012. (Public Resources Code 21000 to 21177) and California Environmental Quality Act Guidelines (California Code of Regulations Title 14, Division 6, Chapter 3, Sections 15000 – 15387). California Environmental Quality Act Website accessed in March 2014 by Matt Daniel of IEC: http://ceres.ca.gov/ceqa/guidelines/

Canadian Nuclear Society. 1998. 19th Annual Conference. October 1998.

Intergovernment Panel on Climate Change (IPCC). 2007. "Fourth Assessment Report. 2007"

Santa Barbara County. 2011. Santa Barbara County Climate Action Strategy; Phase 1 – Climate Action Study. September 2011. Long Range Planning Division. Planning and Development Department. http://www.longrange.sbcountyplanning.org/programs/climateactionstrategy/docs/ClimateAction Study Sept 2011.pdf

----------. 2013. Energy and Climate Action Plan Summary Information, Board of Supervisors Briefing (March 12, 2013). http://www.colabsbc.org/manager/Upload/NewsAlert/ECA)_20_Summary.pdf

_____. 2013b. Santa Barbara County Board of Supervisors Approval of Santa Maria Energy Production and Development Plans and Laguna County Sanitation District Phase 3

Recycled Water Pipeline with GHG threshold of 10,000 MT CO2e/year, November 12, 2013. Weblink://www.sbcountyplanning.org/projects/12DVP-00008SMEnergy/index.cfm

----------. 2014. Cumulative development lists for general land use applications and oil and gas leases in north Santa Barbara County.

Santa Barbara County Air Pollution Control District. 2000. Environmental Review Guidelines Procedures for Santa Barbara County Air Pollution Control District, Guidelines for Implementation of the California Environmental Quality Act of 1970 as Amended. Adopted October 19, 1995; Revised November 16, 2000.

----------. 2011. 2011 Santa Barbara County Pollutant Summary. Website access by V. Rosenkrantz of IEC during July and August 2014. http://www.sbcapcd.org/sbc/2011-POLLUTANTS-Summary.pdf

----------. 2014a. Current Rules and Regulations, Attainment Status, August 2014. Site accessed by V. Rosenkrantz of IEC July and August of 2014. http://www.sbcapcd.org

----------. 2014b. Scope and Content of Air Quality Sections in Environmental Documents, Prepared by Technology and Environmental Assessment Division. Website: http://www.sbcapcd.org/apcd/ScopeContentMarch2014.pdf. Site accessed by Valerie Rosenkrantz of IEC in July 30, 2014.

----------. 2015. 2013 Clean Air Plan, Final March 2015. Santa Barbara County's Plan to Attain the State Ozone Standard. Website access by M. Daniel of IEC during August 2015. http://www.ourair.org/wp-content/uploads/Final2013CleanAirPlan.pdf

Santa Barbara County. 2008. Environmental Thresholds and Guidelines Manual. Revised January 1995. Revised October 2001. Revised October 2002. Replacement Pages July 2003. Interim Revision to Air Quality Subsection October 2006. Revised January 2008. Revised September 2008. Revised 2015.

U.S. Environmental Protection Agency. 1995. AP-42 Fifth Edition, Compilation of Air Pollutant Emission Factors, as amended. http://www.epa.gov/ttn/chief/ap42/index.html#toc

--------. 2000. Greenhouse Gas and Global Warming. Available at: http://www.epa.gov/airtrends/aqtrnd95/globwarm.html

--------. 2007. "The Emissions and Generation Resource Integrated Database For 2006 (eGrid 2006) Technical Support Document." http://www.epa.gov/cleanenergy/egrid

--------. 2014. Inventory of U.S. Greenhouse Gas Emissions and Sinks. 1990-2012 (April 15, 2014). USEPA# 430-R-14-003

Young, M. 2014. Planner. Santa Barbara County Planning and Development. Telephone conversation and email with V. Rosenkrantz of IEC in August 2014.

Wunderground, 2013. Weather History for Santa Maria. Website accessed by V. Rosenkrantz of IEC on July 31, 2014.

http://www.wunderground.com/history/airport/KSMX/2013/1/1/CustomHistory.html?dayend=31&monthend=12&yearend=2013&req_city=NA&req_state=NA&req_statename=NA

AQIA ATTACHMENTS

A. Emissions Calculations and Support Documents
B. California Emissions Estimator Model v.2013.2.2 Output Files
C. Health Risk Assessment
D. Ambient Air Quality Analysis
E. Equipment Specifications
F. Material Safety Data Sheets

List of Attachments

A. Emissions Calculations and Support Documents
- Equipment Listings and Schedules
  - Construction Equipment Listing and Schedule
  - Drilling and Well Hookup Equipment Listing and Schedule
  - Construction Equipment Horsepower
- Construction Emissions
  - Construction Equipment Emission
  - Construction Vehicle Travel Emission
  - Construction Fugitive Dust Emission
  - Construction Off-Site Emission
- Drilling Emissions
  - Drilling Equipment Emission
  - Drilling Fugitive Emission
- Non-Stationary Source Operational Emissions
  - Trip Generation Day to Day Operations
  - Tanker Trips and Mileage
  - Operating Mobile Emissions Excluding Tankers
  - Operating Tankers Emissions
  - Operational Fugitive Dust Emissions
- Stationary Source Operational Emissions
  - Stationary Source Emissions Summary
  - Emergency Generator Emissions
  - Flare Emissions
  - Equipment Component Leaks Fugitive Emissions
  - Equipment Component Counts
  - Truck Loading Rack Emissions
  - Steam Generators Emissions
  - Storage Tanks Emissions
- Electrical Generation Greenhouse Gas Emissions
  - Operating Indirect Electrical Generation Emissions
- Emission Summaries
  - Construction Emissions Summaries
  - Operational Emissions Summaries

B. California Emissions Estimator Model v.2013.2.2 Output Files

C. Health Risk Assessment
- HRA Sources
  - Table C-1: HRA Emission Sources Max Hour Emissions
  - Table C-2: HRA Emission Sources Annual Emissions
  - Table C-3: Project Sources' Locations and Parameters
- Toxic Emission Calculations
  - Table C-4: Toxic Emissions – Steam Generators
  - Table C-5: Toxic Emissions – Flare
  - Table C-6: Toxic Emission Factors for Tanks, Fugitive Components, and Loading Rack
  - Table C-7: H2S Emission Factors for Tanks, Fugitive Components, and Loading Rack
  - Table C-8: Air Toxic Emissions for Fugitive Gas Service Components with High H2S Concentration

    - Table C-9: Air Toxic Emissions for Fugitive Gas Service Components with Low H2S Concentration
    - Table C-10: Air Toxic Emissions for Fugitive Oil Service Components with High H2S Concentration
    - Table C-11: Air Toxic Emissions for Fugitive Oil Service Components with Low H2S Concentration
    - Table C-12: Air Toxic Emissions for Tanks and Loading Rack
    - Table C-13: Air Toxic Emission Factor for Solvents/Coatings Usage
    - Table C-14: Air Toxic Emission Summary for Solvents/Coatings Usage
    - Table C-15: Air Toxic Emission for Solvents/Coatings Usage By Modeled Source
    - Table C-16: Air Toxic Emissions Factors and Emissions for Natural Gas Fired Emergency IC Engine
    - Table C-17: Air Toxic Emissions for Trucks – DPM
- HRA Structures
    - Table C-18: Structure Parameters Used to Calculate Building Downwash
- HRA Receptors
    - Table C-19: Receptor Locations and Elevations
- HRA Results
    - Table C-20: Summary of HRA Results
    - Table C-21: Cancer Risk Driver By Substance – PMI Receptor 197
    - Table C-22: Cancer Risk Driver By Substance – MEIR Receptor 3756
    - Table C-23: Cancer Risk Driver By Substance – MEIW Receptor 3799
    - Table C-24: Chronic Risk Driver By Substance – PMI Receptor 197
    - Table C-25: Chronic Risk Driver By Substance – MEIR Receptor 3765
    - Table C-26: Chronic Risk Driver By Substance – MEIW Receptor 3799
    - Table C-27: 8-HR Chronic Risk Driver By Substance – PMI Receptor 196
    - Table C-28: 8-HR Chronic Risk Driver By Substance – MEIR Receptor 3750
    - Table C-29: 8-HR Chronic Risk Driver By Substance – MEIW Receptor 3799
    - Table C-30: Acute Risk Driver By Substance – PMI Receptor 2151
    - Table C-31: Acute Risk Driver By Substance – MEIR Receptor 3750
    - Table C-32: Acute Risk Driver By Substance – MEIW Receptor 3799
- HRA Figures
    - Buildings and Structures (Figure C-1)
    - All Sources (Figures C-2)
    - Central Processing Facility Sources (Figures C-3)
    - 1st Run One and ten per Million Cancer Risk Isopleths (Figures C-4)
    - 2nd Run One and ten per Million Cancer Risk Isopleths (Figures C-5)
    - Acute Non-Cancer Hazard Index Isopleth (Figure C-6)
    - 8-hour Chronic Non-Cancer Hazard Index Isopleth (Figure C-7)
    - Chronic Non-Cancer Hazard Index Isopleth (Figure C-8)
    - Project Boundary Coordinate Points (Figure C-9)
- Modeling Files
    - AERMOD and Hotspots Analysis and Reporting Program Modeling Files (Electronic)

D. Ambient Air Quality Analysis
    - AAQA Project Emissions
        - Table D-1: Stationary Source Emissions Summary
        - Tables D-2: ROC Emissions for Fugitive Gas Service Components
        - Tables D-3: ROC Emissions for Fugitive Oil Service Components
        - Tables D-4: ROC Emissions for Tanks and Loading Rack
    - AAQA Sources
        - Table D-5: Project Sources' Locations and Parameters
    - Emission Rates and Results
        - Table D-6: Ambient Air Quality Assessment Emissions Excluding ROC
        - Table D-7: Ambient Air Quality Assessment Results
        - Table D-8: Class I Ambient Air Quality Incremental Analysis Results
        - Table D-9: ROC Ambient Air Quality Emission
    - AAQA Structures
        - Table D-10: Structure Parameters Used to Calculate Building Downwash
    - AAQA Receptors
        - Table D-11: Receptor Locations and Elevations
    - Modeling Files
        - AERMOD Modeling Files (Electronic)

E. Equipment Specifications
    - Detailed Equipment List
    - Steam Generator Specification
    - Flare Specification
    - Flow Meter Specification
    - Emergency Generator Specification
    - Miscellaneous Equipment
    - Fluid Throughput Measurement
    - SG Fuel Use Measurement
    - Sulfatreat® Monitoring and Media Replacement procedures
    - Gas Flaring Scenarios

F. Material Safety Data Sheets
    - Amerlock 400
    - Amershield
    - Hempadur 15570
    - Hempadur 17369
    - Surftreat
    - Interseal 670

ATTACHMENT A

Emissions Calculations and Support Documents

- Equipment Listings and Schedules
- Construction Emissions
- Drilling Emissions
- Non-Stationary Source Operational Emissions
- Stationary Source Operational Emissions
- Emission Summaries

Equipment Listings and Schedules

- Construction Equipment Listing and Schedule
- Drilling and Well Hookup Equipment Listing and Schedule
- Construction Equipment Horsepower

Construction Equipment Listing and Schedule

Activity	Year	Labor/Equipment	T	1	2	3	4	5	6	7	8	9	10	11	12
115KV Interconnect	-3	BOOMTRUCK,23-28 TON	E					1	1						
115KV Interconnect	-3	TRAILER,POLE	E					1	1						
115KV Interconnect	-3	TRAILER,CABLE PULLER,20-30K PULL	E					1	1						
115KV Interconnect	-3	TRUCK,2 TON,2X4,DIGGER	E					1	1						
115KV Interconnect	-3	UTILITY TRUCK,1 TON Cable Tensioner	E					1	1						
115KV Interconnect	-3	TRUCK,2 TON,2X4,BUCKET	E					2	2						
115KV Interconnect	-3	PICKUP,3/4 TON,4X4,CREWCAB	E					2	2						
14-mile Fuel Line	-2	ASPHALT MILL ATTACHMENT,2-4'	E				1	1	1	1	1	1			
14-mile Fuel Line	-2	CONCRETE SAW,5-7" WET CUT	E				1	1	1	1	1	1			
14-mile Fuel Line	-2	BORING SYSTEM,PILOT TUBE,AUGER,HYDRAULIC	E				1	1	1	1	1	1			
14-mile Fuel Line	-2	BORING SYSTEM,30-36",AUGER,DIESEL	E				1	1	1	1	1	1			
14-mile Fuel Line	-2	MOTOR GRADER,130-150 HP	E				1	1	1	1	1	1			
14-mile Fuel Line	-2	Cat D6	E				1	1	1	1	1	1			
14-mile Fuel Line	-2	TRENCHER,3-5'	E				1	1	1	1	1	1			
14-mile Fuel Line	-2	WATER TANK STAND,10-12K GALLON	E				1	1	1	1	1	1			
14-mile Fuel Line	-2	FUEL SYSTEM,600-800 GALLON,PORTABLE	E				1	1	1	1	1	1			
14-mile Fuel Line	-2	COMPRESSOR,300-400 CFM,DIESEL	E				2	2	2	2	2	2			
14-mile Fuel Line	-2	COMPRESSOR,800-1000 CFM,DIESEL	E				2	2	2	2	2	2			
14-mile Fuel Line	-2	COMPACTOR,40-66" ROLLER,RIDE ON	E				2	2	2	2	2	2			
14-mile Fuel Line	-2	CRANE,15-19 TON,HYDRAULIC,RT	E				2	2	2	2	2	2			
14-mile Fuel Line	-2	SWEEPER,6-8',RIDING	E				2	2	2	2	2	2			
14-mile Fuel Line	-2	ROAD TRACTOR,4X6	E				2	2	2	2	2	2			
14-mile Fuel Line	-2	FUEL/LUBE TRUCK,4 TON,4X6	E				2	2	2	2	2	2			
14-mile Fuel Line	-2	UTILITY TRUCK,1 TON,4X4,CREWCAB	E				2	2	2	2	2	2			
14-mile Fuel Line	-2	PIPE BEVELER,22-36",C FRAME	E				2	2	2	2	2	2			
14-mile Fuel Line	-2	BACKHOE/LOADER,1.50-2.0CY	E				3	3	3	3	3	3			
14-mile Fuel Line	-2	SIDEBOOM,90K#,200HP (572)	E				3	3	3	3	3	3			
14-mile Fuel Line	-2	MECHANIC'S TRUCK,1 TON,2X4	E				3	3	3	3	3	3			
14-mile Fuel Line	-2	WATER TRUCK,4-5K GALLON,4X6	E				4	4	4	4	4	4			
14-mile Fuel Line	-2	FLATBED,1.5 TON,2X4	E				4	4	4	4	4	4			
14-mile Fuel Line	-2	FLATBED,20-28',4X6	E				5	5	5	5	5	5			
14-mile Fuel Line	-2	BACKHOE/LOADER,1-1.25CY	E				6	6	6	6	6	6			
14-mile Fuel Line	-2	SIDEBOOM,14OK#,300HP (583)	E				7	7	7	7	7	7			
14-mile Fuel Line	-2	DUMPTRUCK,10-12CY,4X6	E				7	7	7	7	7	7			
14-mile Fuel Line	-2	WELDER,150-200 AMP, GASOLINE	E				10	10	10	10	10	10			
14-mile Fuel Line	-2	UTILITY TRUCK,3/4 TON,2X4	E				10	10	10	10	10	10			
14-mile Fuel Line	-2	PICKUP,1/2 TON,2X4,SUPERCAB	E				15	15	15	15	15	15			
CPP	4	WELDER,8PAK ELEC,RECTIFIER	E				1	1	1	1	1	0	0	0	0
CPP	4	COMPACTOR,ROLLER,24-33"	E				1	1	1	1	1	1	0	0	0
CPP	4	WHEEL LOADER,2.5-3.0CY	E				1	1	1	1	1	1	0	0	0
CPP	4	CRANE,40-50 TON,LAT BOOM, MECH,CRAWLER	E				1	1	1	1	1	1	0	0	0
CPP	5	WELDER,8PAK ELEC,RECTIFIER	E	0	1	1	1	1	1	1	1	0	0	0	0
CPP	-2	CRANE,40-50 TON,LAT BOOM, MECH,CRAWLER	E	0	1	1	1	1	1	1	1	1	0	0	0
CPP	-1	CRANE,40-50 TON,LAT BOOM, MECH,CRAWLER	E	0	1	1	1	1	1	1	1	1	0	0	0
CPP	4	TAMPER,100-150#	E				1	1	1	1	1	1	1	1	0
CPP	5	CRANE,40-50 TON,LAT BOOM, MECH,CRAWLER	E	0	1	1	1	1	1	1	1	1	0	0	0
CPP	4	LOADER,SKIDSTEER 36-45HP	E				1	1	1	1	1	1	1	1	1
CPP	4	BACKHOE/LOADER,.75-1CY	E				1	1	1	1	1	1	1	1	1
CPP	4	MANLIFT,40-50',ELECTRIC	E				1	1	1	1	1	1	1	1	1
CPP	4	SCISSOR LIFT,<20'	E				1	1	1	1	1	1	1	1	1
CPP	4	FORKLIFT,7-9K#,YARD	E				1	1	1	1	1	1	1	1	1
CPP	4	FORKLIFT,8-9K# RT TELE BOOM	E				1	1	1	1	1	1	1	1	1
CPP	4	FUEL/LUBE TRUCK,2 TON,2X4	E				1	1	1	1	1	1	1	1	1
CPP	4	FLATBED,1 TON,2X4	E				1	1	1	1	1	1	1	1	1
CPP	4	TRUCK,1.5 TON,2X4,W/CRANE	E				1	1	1	1	1	1	1	1	1
CPP	4	SUV,6-9 PASSENGER 4X4	E				1	1	1	1	1	1	1	1	1
CPP	5	COMPACTOR,ROLLER,24-33"	E	1	1	1	1	1	1	1	1	1	0	0	0
CPP	5	WHEEL LOADER,2.5-3.0CY	E	1	1	1	1	1	1	1	1	1	0	0	0
CPP	5	MANLIFT,40-50',ELECTRIC	E	0	0	1	1	1	1	1	1	1	1	1	1
CPP	5	SCISSOR LIFT,<20'	E	0	0	1	1	1	1	1	1	1	1	1	1
CPP	-2	TAMPER,100-150#	E	1	1	1	1	1	1	1	1	1	1	1	0
CPP	-1	TAMPER,100-150#	E	1	1	1	1	1	1	1	1	1	1	1	0
CPP	5	TAMPER,100-150#	E	1	1	1	1	1	1	1	1	1	1	1	0
CPP	-2	LOADER,SKIDSTEER 36-45HP	E	1	1	1	1	1	1	1	1	1	1	1	1
CPP	-2	FUEL/LUBE TRUCK,2 TON,2X4	E	1	1	1	1	1	1	1	1	1	1	1	1
CPP	-2	TRUCK,1.5 TON,2X4,W/CRANE	E	1	1	1	1	1	1	1	1	1	1	1	1
CPP	-2	SUV,6-9 PASSENGER 4X4	E	1	1	1	1	1	1	1	1	1	1	1	1

Construction Equipment Listing and Schedule

Activity	Year	Labor/Equipment	T	1	2	3	4	5	6	7	8	9	10	11	12
CPP	-1	LOADER,SKIDSTEER 36-45HP	E	1	1	1	1	1	1	1	1	1	1	1	1
CPP	-1	FUEL/LUBE TRUCK,2 TON,2X4	E	1	1	1	1	1	1	1	1	1	1	1	1
CPP	-1	TRUCK,1.5 TON,2X4,W/CRANE	E	1	1	1	1	1	1	1	1	1	1	1	1
CPP	-1	SUV,6-9 PASSENGER 4X4	E	1	1	1	1	1	1	1	1	1	1	1	1
CPP	4	CRANE,10-14 TON,HYDRAULIC,RT	E				1	1	2	2	2	1	1	1	1
CPP	5	LOADER,SKIDSTEER 36-45HP	E	1	1	1	1	1	1	1	1	1	1	1	1
CPP	5	BACKHOE/LOADER,.75-1CY	E	1	1	1	1	1	1	1	1	1	1	1	1
CPP	5	FORKLIFT,7-9K#,YARD	E	1	1	1	1	1	1	1	1	1	1	1	1
CPP	5	FORKLIFT,8-9K# RT TELE BOOM	E	1	1	1	1	1	1	1	1	1	1	1	1
CPP	5	FUEL/LUBE TRUCK,2 TON,2X4	E	1	1	1	1	1	1	1	1	1	1	1	1
CPP	5	FLATBED,1 TON,2X4	E	1	1	1	1	1	1	1	1	1	1	1	1
CPP	5	TRUCK,1.5 TON,2X4,W/CRANE	E	1	1	1	1	1	1	1	1	1	1	1	1
CPP	5	SUV,6-9 PASSENGER 4X4	E	1	1	1	1	1	1	1	1	1	1	1	1
CPP	4	COMPRESSOR,100-200 CFM,DIESEL	E				2	2	2	2	1	1	1	1	1
CPP	4	GENERATOR,6-10KW,DIESEL	E				2	2	2	2	1	1	1	1	1
CPP	4	MECHANIC'S TRUCK,2.5 TON,4X6	E				1	2	2	2	2	1	1	1	1
CPP	-2	WHEEL LOADER,2.5-3.0CY	E	1	1	2	2	2	2	2	1	1	0	0	0
CPP	-2	SCISSOR LIFT,<20'	E	0	0	1	2	2	2	2	1	1	1	1	1
CPP	-2	WELDER,8PAK ELEC,RECTIFIER	E	0	2	2	2	2	2	2	2	0	0	0	0
CPP	-1	WHEEL LOADER,2.5-3.0CY	E	1	1	2	2	2	2	2	1	1	0	0	0
CPP	-1	SCISSOR LIFT,<20'	E	0	0	1	2	2	2	2	1	1	1	1	1
CPP	-1	WELDER,8PAK ELEC,RECTIFIER	E	0	2	2	2	2	2	2	2	0	0	0	0
CPP	4	PEOPLE MOVER,16-30 PASS	E				2	2	3	3	2	2	0	0	0
CPP	5	CRANE,10-14 TON,HYDRAULIC,RT	E	0	1	1	1	1	2	2	2	1	1	1	1
CPP	-2	BACKHOE/LOADER,.75-1CY	E	1	2	2	2	1	1	1	1	1	1	1	1
CPP	-1	BACKHOE/LOADER,.75-1CY	E	1	2	2	2	1	1	1	1	1	1	1	1
CPP	4	GOLF CART	E				2	2	2	2	2	2	1	1	1
CPP	-2	FLATBED,1 TON,2X4	E	1	1	1	1	2	2	2	2	1	1	1	1
CPP	-1	FLATBED,1 TON,2X4	E	1	1	1	1	2	2	2	2	1	1	1	1
CPP	4	PICKUP,3/4 TON,4X4,SUPERCAB	E				2	2	2	2	2	2	2	1	1
CPP	5	MECHANIC'S TRUCK,2.5 TON,4X6	E	1	1	1	1	2	2	2	2	1	1	1	1
CPP	5	PEOPLE MOVER,16-30 PASS	E	0	0	2	2	2	3	3	2	2	0	0	0
CPP	-2	COMPACTOR,ROLLER,24-33"	E	1	2	2	2	2	2	2	2	2	0	0	0
CPP	-1	COMPACTOR,ROLLER,24-33"	E	1	2	2	2	2	2	2	2	2	0	0	0
CPP	5	COMPRESSOR,100-200 CFM,DIESEL	E	1	1	2	2	2	2	2	1	1	1	1	1
CPP	5	GENERATOR,6-10KW,DIESEL	E	1	1	2	2	2	2	2	1	1	1	1	1
CPP	-2	MANLIFT,40-50',ELECTRIC	E	0	0	2	2	2	2	2	2	2	2	1	1
CPP	-1	MANLIFT,40-50',ELECTRIC	E	0	0	2	2	2	2	2	2	2	2	1	1
CPP	-2	FORKLIFT,8-9K# RT TELE BOOM	E	1	2	2	2	2	2	2	2	1	1	1	1
CPP	-1	FORKLIFT,8-9K# RT TELE BOOM	E	1	2	2	2	2	2	2	2	1	1	1	1
CPP	5	GOLF CART	E	1	1	2	2	2	2	2	2	2	1	1	1
CPP	5	PICKUP,3/4 TON,4X4,SUPERCAB	E	1	1	2	2	2	2	2	2	2	2	1	1
CPP	-2	FORKLIFT,7-9K#,YARD	E	1	2	2	2	2	2	2	2	2	2	1	1
CPP	-1	FORKLIFT,7-9K#,YARD	E	1	2	2	2	2	2	2	2	2	2	1	1
CPP	4	WELDER,400-500 AMP DIESEL	E				2	4	4	4	4	4	2	1	1
CPP	-2	CRANE,10-14 TON,HYDRAULIC,RT	E	0	2	2	2	2	4	4	4	2	2	2	2
CPP	-2	MECHANIC'S TRUCK,2.5 TON,4X6	E	1	1	2	2	4	4	4	4	2	2	1	1
CPP	-1	CRANE,10-14 TON,HYDRAULIC,RT	E	0	2	2	2	2	4	4	4	2	2	2	2
CPP	-1	MECHANIC'S TRUCK,2.5 TON,4X6	E	1	1	2	2	4	4	4	4	2	2	1	1
CPP	5	WELDER,400-500 AMP DIESEL	E	1	1	2	2	4	4	4	4	4	2	1	1
CPP	-2	COMPRESSOR,100-200 CFM,DIESEL	E	1	2	4	4	4	4	4	2	2	2	2	1
CPP	-2	GENERATOR,6-10KW,DIESEL	E	1	2	4	4	4	4	4	2	2	2	2	1
CPP	-1	COMPRESSOR,100-200 CFM,DIESEL	E	1	2	4	4	4	4	4	2	2	2	2	1
CPP	-1	GENERATOR,6-10KW,DIESEL	E	1	2	4	4	4	4	4	2	2	2	2	1
CPP	-2	PEOPLE MOVER,16-30 PASS	E	0	0	4	4	5	6	6	4	4	0	0	0
CPP	-1	PEOPLE MOVER,16-30 PASS	E	0	0	4	4	5	6	6	4	4	0	0	0
CPP	-2	GOLF CART	E	2	2	4	4	4	4	4	4	4	2	2	1
CPP	-1	GOLF CART	E	2	2	4	4	4	4	4	4	4	2	2	1
CPP	-2	PICKUP,3/4 TON,4X4,SUPERCAB	E	2	2	5	5	5	5	5	5	5	5	2	2
CPP	-1	PICKUP,3/4 TON,4X4,SUPERCAB	E	2	2	5	5	5	5	5	5	5	5	2	2
CPP	-2	WELDER,400-500 AMP DIESEL	E	1	2	4	4	7	7	7	7	7	4	2	1
CPP	-1	WELDER,400-500 AMP DIESEL	E	1	2	4	4	7	7	7	7	7	4	2	1
CPP,SP,GS, Office Grading	-2	Cat 875 Challenger	E	1	1										
CPP,SP,GS, Office Grading	-2	Cat D6	E	1	1										
CPP,SP,GS, Office Grading	-2	Cat 14 Grader	E	1	1										
CPP,SP,GS, Office Grading	-2	Cat 623 Water Wagon	E	1	1										
CPP,SP,GS, Office Grading	-2	PICKUP,1/2 TON,2X4	E	2	2										

Construction Equipment Listing and Schedule

Activity	Year	Labor/Equipment	T	1	2	3	4	5	6	7	8	9	10	11	12
CPP,SP,GS, Office Grading	-2	Cat 815 Compactor	E	4	4										
CPP,SP,GS, Office Grading	-3	Cat 875 Challenger	E	1	1	1	1	1	1	2	2	1	1	1	1
CPP,SP,GS, Office Grading	-3	Cat D6	E	1	1	1	1	1	1	2	2	1	1	1	1
CPP,SP,GS, Office Grading	-3	Cat 14 Grader	E	1	1	1	1	1	1	2	2	1	1	1	1
CPP,SP,GS, Office Grading	-3	Cat 623 Water Wagon	E	1	1	1	1	1	1	2	2	1	1	1	1
CPP,SP,GS, Office Grading	-3	GENERATOR,6-10KW,DIESEL	E	1	1	1	1	1	1	2	2	1	1	1	1
CPP,SP,GS, Office Grading	-3	MECHANIC'S TRUCK,1.5 TON,2X4	E	1	1	1	1	1	1	2	2	1	1	1	1
CPP,SP,GS, Office Grading	-3	PICKUP,1/2 TON,2X4	E	2	2	2	2	2	2	4	4	2	2	2	2
CPP,SP,GS, Office Grading	-3	Cat 815 Compactor	E	4	4	4	4	4	4	8	8	4	4	4	4
Entrances	-2	CRANE,55-60 TON,HYDRAULIC,RT	E						1						
Entrances	-2	Cat D6	E								1				
Entrances	-2	Cat 14 Grader	E								1				
Entrances	-2	Cat 815 Compactor	E								1				
Entrances	-2	Cat 623 Water Wagon	E								1				
Entrances	-2	Cat D6	E						1	1					
Entrances	-2	Cat 14 Grader	E						1	1					
Entrances	-2	Cat 815 Compactor	E						1	1					
Entrances	-2	Cat 623 Water Wagon	E						1	1					
Entrances	-2	Cat 875 Challenger	E								2				
Entrances	-2	PICKUP,1/2 TON,2X4	E								2				
Entrances	-2	Cat D6	E			1	1	1							
Entrances	-2	Cat 14 Grader	E			1	1	1							
Entrances	-2	Cat 815 Compactor	E			1	1	1							
Entrances	-2	Cat 623 Water Wagon	E			1	1	1							
Entrances	-2	Cat 875 Challenger	E						2	2					
Entrances	-2	PICKUP,1/2 TON,2X4	E						2	2					
Entrances	-2	Cat 875 Challenger	E			2	2	2							
Entrances	-2	PICKUP,1/2 TON,2X4	E			2	2	2							
Fresh Water	-2	BACKHOE/LOADER,.75-1CY	E	1	1	1	1	1	1						
Fresh Water	-2	EXCAVATOR, 10-14K#,MINI	E	1	1	1	1	1	1						
Fresh Water	-2	COMPACTOR WHEEL ATTACHMENT,12-48"	E	1	1	1	1	1	1						
Fresh Water	-2	CRANE,10-14 TON,HYDRAULIC,RT	E	1	1	1	1	1	1						
Fresh Water	-2	FLATBED,1 TON,2X4,CREWCAB	E	1	1	1	1	1	1						
Fresh Water	-2	PICKUP,1/2 TON,2X4	E	2	2	2	2	2	2						
Gath-Dist	10	WHEEL LOADER,3.0-3.5CY	E	1	0	0	0	0	0	0	0	0	0	0	0
Gath-Dist	10	CAT 815 COMPACTOR	E	1	0	0	0	0	0	0	0	0	0	0	0
Gath-Dist	13	BACKHOE/LOADER,.75-1CY	E	0	1	0	0	0	0	0	0	0	0	0	0
Gath-Dist	15	BACKHOE/LOADER,.75-1CY	E	0	1	0	0	0	0	0	0	0	0	0	0
Gath-Dist	15	PICKUP,1/2 TON,4X4	E	0	1	0	0	0	0	0	0	0	0	0	0
Gath-Dist	15	PICKUP,3/4 TON,4X4	E	0	1	0	0	0	0	0	0	0	0	0	0
Gath-Dist	1	WHEEL LOADER,3.0-3.5CY	E	1	1	0	0	0	0	0	0	0	0	0	0
Gath-Dist	1	BACKHOE/LOADER,.75-1CY	E	1	1	0	0	0	0	0	0	0	0	0	0
Gath-Dist	1	CAT 815 COMPACTOR	E	1	1	0	0	0	0	0	0	0	0	0	0
Gath-Dist	7	WHEEL LOADER,3.0-3.5CY	E	1	1	0	0	0	0	0	0	0	0	0	0
Gath-Dist	7	BACKHOE/LOADER,.75-1CY	E	1	1	0	0	0	0	0	0	0	0	0	0
Gath-Dist	7	CAT 815 COMPACTOR	E	1	1	0	0	0	0	0	0	0	0	0	0
Gath-Dist	12	WHEEL LOADER,3.0-3.5CY	E	1	1	0	0	0	0	0	0	0	0	0	0
Gath-Dist	12	BACKHOE/LOADER,.75-1CY	E	1	1	0	0	0	0	0	0	0	0	0	0
Gath-Dist	12	CAT 815 COMPACTOR	E	1	1	0	0	0	0	0	0	0	0	0	0
Gath-Dist	13	WHEEL LOADER,3.0-3.5CY	E	1	1	0	0	0	0	0	0	0	0	0	0
Gath-Dist	13	CAT 815 COMPACTOR	E	1	1	0	0	0	0	0	0	0	0	0	0
Gath-Dist	15	WHEEL LOADER,3.0-3.5CY	E	1	1	0	0	0	0	0	0	0	0	0	0
Gath-Dist	15	CAT 815 COMPACTOR	E	1	1	0	0	0	0	0	0	0	0	0	0
Gath-Dist	11	WHEEL LOADER,3.0-3.5CY	E	1	1	1	0	0	0	0	0	0	0	0	0
Gath-Dist	11	BACKHOE/LOADER,.75-1CY	E	1	1	1	0	0	0	0	0	0	0	0	0
Gath-Dist	11	CAT 815 COMPACTOR	E	1	1	1	0	0	0	0	0	0	0	0	0
Gath-Dist	2	WHEEL LOADER,3.0-3.5CY	E	1	1	1	1	0	0	0	0	0	0	0	0
Gath-Dist	2	BACKHOE/LOADER,.75-1CY	E	1	1	1	1	0	0	0	0	0	0	0	0
Gath-Dist	2	CAT 815 COMPACTOR	E	1	1	1	1	0	0	0	0	0	0	0	0
Gath-Dist	16	WHEEL LOADER,3.0-3.5CY	E	1	1	1	1	0	0	0	0	0	0	0	0
Gath-Dist	16	BACKHOE/LOADER,.75-1CY	E	1	1	1	1	0	0	0	0	0	0	0	0
Gath-Dist	16	CAT 815 COMPACTOR	E	1	1	1	1	0	0	0	0	0	0	0	0
Gath-Dist	5	COMPACTOR,40-66" ROLLER,RIDE ON	E	1	1	1	1	1	1	0	0	0	0	0	0
Gath-Dist	5	WHEEL LOADER,3.0-3.5CY	E	1	1	1	1	1	1	0	0	0	0	0	0
Gath-Dist	5	CAT 815 COMPACTOR	E	1	1	1	1	1	1	0	0	0	0	0	0
Gath-Dist	10	BOOMTRUCK,10-13 TON	E	0	1	1	1	1	1	1	1	0	0	0	0
Gath-Dist	10	WELDER,500-800 AMP DIESEL MULTI PURPOSE	E	0	1	1	1	1	1	1	1	0	0	0	0

Construction Equipment Listing and Schedule

Activity	Year	Labor/Equipment	T	1	2	3	4	5	6	7	8	9	10	11	12
Gath-Dist	13	PICKUP,1/2 TON,4X4	E	0	1	1	1	1	1	1	1	0	0	0	0
Gath-Dist	13	PICKUP,3/4 TON,4X4	E	0	1	1	1	1	1	1	1	0	0	0	0
Gath-Dist	15	BOOMTRUCK,10-13 TON	E	0	2	1	1	1	1	1	1	0	0	0	0
Gath-Dist	15	WELDER,500-800 AMP DIESEL MULTI PURPOSE	E	0	2	1	1	1	1	1	1	0	0	0	0
Gath-Dist	-1	COMPACTOR,40-66" ROLLER,RIDE ON	E	1	1	1	1	1	1	1	1	1	0	0	0
Gath-Dist	-1	WHEEL LOADER,3.0-3.5CY	E	1	1	1	1	1	1	1	1	1	0	0	0
Gath-Dist	-1	CAT 815 COMPACTOR	E	1	1	1	1	1	1	1	1	1	0	0	0
Gath-Dist	5	BACKHOE/LOADER,.75-1CY	E	1	2	2	2	1	1	0	0	0	0	0	0
Gath-Dist	7	PICKUP,1/2 TON,4X4	E	1	2	1	1	1	1	1	1	0	0	0	0
Gath-Dist	7	PICKUP,3/4 TON,4X4	E	1	2	1	1	1	1	1	1	0	0	0	0
Gath-Dist	12	PICKUP,1/2 TON,4X4	E	1	2	1	1	1	1	1	1	0	0	0	0
Gath-Dist	12	PICKUP,3/4 TON,4X4	E	1	2	1	1	1	1	1	1	0	0	0	0
Gath-Dist	13	BOOMTRUCK,10-13 TON	E	0	2	2	1	1	1	1	1	0	0	0	0
Gath-Dist	13	WELDER,500-800 AMP DIESEL MULTI PURPOSE	E	0	2	2	1	1	1	1	1	0	0	0	0
Gath-Dist	11	PICKUP,1/2 TON,4X4	E	1	2	2	1	1	1	1	1	0	0	0	0
Gath-Dist	11	PICKUP,3/4 TON,4X4	E	1	2	2	1	1	1	1	1	0	0	0	0
Gath-Dist	7	BOOMTRUCK,10-13 TON	E	0	2	2	2	2	1	1	1	0	0	0	0
Gath-Dist	7	WELDER,500-800 AMP DIESEL MULTI PURPOSE	E	0	2	2	2	2	1	1	1	0	0	0	0
Gath-Dist	11	BOOMTRUCK,10-13 TON	E	0	2	2	2	2	2	1	1	0	0	0	0
Gath-Dist	11	WELDER,500-800 AMP DIESEL MULTI PURPOSE	E	0	2	2	2	2	2	1	1	0	0	0	0
Gath-Dist	12	BOOMTRUCK,10-13 TON	E	0	2	2	2	2	2	1	1	0	0	0	0
Gath-Dist	12	WELDER,500-800 AMP DIESEL MULTI PURPOSE	E	0	2	2	2	2	2	1	1	0	0	0	0
Gath-Dist	1	PICKUP,1/2 TON,4X4	E	1	3	2	2	2	2	2	2	0	0	0	0
Gath-Dist	1	PICKUP,3/4 TON,4X4	E	1	3	2	2	2	2	2	2	0	0	0	0
Gath-Dist	2	BOOMTRUCK,10-13 TON	E	0	3	3	3	2	2	2	2	0	0	0	0
Gath-Dist	2	WELDER,500-800 AMP DIESEL MULTI PURPOSE	E	0	3	3	3	2	2	2	2	0	0	0	0
Gath-Dist	1	BOOMTRUCK,10-13 TON	E	0	3	3	3	3	2	2	2	0	0	0	0
Gath-Dist	1	WELDER,500-800 AMP DIESEL MULTI PURPOSE	E	0	3	3	3	3	2	2	2	0	0	0	0
Gath-Dist	2	PICKUP,1/2 TON,4X4	E	1	3	3	3	2	2	2	2	0	0	0	0
Gath-Dist	2	PICKUP,3/4 TON,4X4	E	1	3	3	3	2	2	2	2	0	0	0	0
Gath-Dist	16	BOOMTRUCK,10-13 TON	E	0	3	3	3	3	3	3	2	0	0	0	0
Gath-Dist	16	PICKUP,1/2 TON,4X4	E	1	4	4	4	3	3	3	3	0	0	0	0
Gath-Dist	16	PICKUP,3/4 TON,4X4	E	1	4	4	4	3	3	3	3	0	0	0	0
Gath-Dist	16	WELDER,500-800 AMP DIESEL MULTI PURPOSE	E	0	4	4	4	4	4	4	3	0	0	0	0
Gath-Dist	5	BOOMTRUCK,10-13 TON	E	0	4	4	4	3	3	3	3	3	3	0	0
Gath-Dist	-1	BACKHOE/LOADER,.75-1CY	E	4	5	5	5	5	4	4	4	4	0	0	0
Gath-Dist	-1	BOOMTRUCK,10-13 TON	E	0	4	4	4	4	4	4	4	4	4	4	0
Gath-Dist	5	PICKUP,1/2 TON,4X4	E	1	5	5	5	5	5	5	5	5	5	0	0
Gath-Dist	5	PICKUP,3/4 TON,4X4	E	1	5	5	5	5	5	5	5	5	5	0	0
Gath-Dist	5	WELDER,500-800 AMP DIESEL MULTI PURPOSE	E	0	7	7	7	7	6	6	6	6	6	0	0
Gath-Dist	-1	PICKUP,1/2 TON,4X4	E	1	6	6	6	7	7	7	7	7	7	7	0
Gath-Dist	-1	PICKUP,3/4 TON,4X4	E	1	6	6	6	7	7	7	7	7	7	7	0
Gath-Dist	-1	WELDER,500-800 AMP DIESEL MULTI PURPOSE	E	0	8	8	8	8	8	8	8	8	7	7	0
Misc Piping	5	WHEEL LOADER,3.0-3.5CY	E	1	1	1	0	0	0	0	0	0	0	0	0
Misc Piping	5	BACKHOE/LOADER,.75-1CY	E	1	1	1	0	0	0	0	0	0	0	0	0
Misc Piping	5	CAT 815 COMPACTOR	E	1	1	1	0	0	0	0	0	0	0	0	0
Misc Piping	-1	COMPACTOR,40-66" ROLLER,RIDE ON	E	1	1	1	1	1	1	1	0	0	0	0	0
Misc Piping	-1	WHEEL LOADER,3.0-3.5CY	E	1	1	1	1	1	1	1	0	0	0	0	0
Misc Piping	-1	CAT 815 COMPACTOR	E	1	1	1	1	1	1	1	0	0	0	0	0
Misc Piping	-1	BACKHOE/LOADER,.75-1CY	E	1	2	2	2	2	2	2	0	0	0	0	0
Misc Piping	5	PICKUP,1/2 TON,4X4	E	1	2	2	2	2	2	1	1	0	0	0	0
Misc Piping	5	PICKUP,3/4 TON,4X4	E	1	2	2	2	2	2	1	1	0	0	0	0
Misc Piping	5	BOOMTRUCK,10-13 TON	E	0	2	2	2	2	2	2	2	0	0	0	0
Misc Piping	5	WELDER,500-800 AMP DIESEL MULTI PURPOSE	E	0	2	2	2	2	2	2	2	0	0	0	0
Misc Piping	-1	BOOMTRUCK,10-13 TON	E	0	4	4	3	3	3	3	3	3	0	0	0
Misc Piping	-1	PICKUP,1/2 TON,4X4	E	1	5	5	5	5	5	5	4	4	0	0	0
Misc Piping	-1	PICKUP,3/4 TON,4X4	E	1	5	5	5	5	5	5	4	4	0	0	0
Misc Piping	-1	WELDER,500-800 AMP DIESEL MULTI PURPOSE	E	0	6	6	6	6	6	6	6	5	0	0	0
Pads and Roads	7	Cat 875 Challenger	E	0	0	0	0	0	0	0	0	1	1	0	0
Pads and Roads	7	Cat D6	E	0	0	0	0	0	0	0	0	1	1	0	0
Pads and Roads	7	Cat 14 Grader	E	0	0	0	0	0	0	0	0	1	1	0	0
Pads and Roads	7	Cat 623 Water Wagon	E	0	0	0	0	0	0	0	0	1	1	0	0
Pads and Roads	11	Cat 875 Challenger	E	0	0	0	0	0	0	0	0	1	1	0	0
Pads and Roads	11	Cat D6	E	0	0	0	0	0	0	0	0	1	1	0	0
Pads and Roads	11	Cat 14 Grader	E	0	0	0	0	0	0	0	0	1	1	0	0
Pads and Roads	11	Cat 623 Water Wagon	E	0	0	0	0	0	0	0	0	1	1	0	0
Pads and Roads	15	Cat 875 Challenger	E	0	0	0	0	0	0	0	0	1	1	0	0

Construction Equipment Listing and Schedule

Activity	Year	Labor/Equipment	T	1	2	3	4	5	6	7	8	9	10	11	12
Pads and Roads	15	Cat D6	E	0	0	0	0	0	0	0	0	1	1	0	0
Pads and Roads	15	Cat 14 Grader	E	0	0	0	0	0	0	0	0	1	1	0	0
Pads and Roads	15	Cat 623 Water Wagon	E	0	0	0	0	0	0	0	0	1	1	0	0
Pads and Roads	2	Cat 875 Challenger	E	0	0	0	0	0	0	0	1	1	1	0	0
Pads and Roads	2	Cat D6	E	0	0	0	0	0	0	0	1	1	1	0	0
Pads and Roads	2	Cat 14 Grader	E	0	0	0	0	0	0	0	1	1	1	0	0
Pads and Roads	2	Cat 623 Water Wagon	E	0	0	0	0	0	0	0	1	1	1	0	0
Pads and Roads	3	Cat 875 Challenger	E	0	0	0	0	0	0	0	1	1	1	0	0
Pads and Roads	3	Cat D6	E	0	0	0	0	0	0	0	1	1	1	0	0
Pads and Roads	3	Cat 14 Grader	E	0	0	0	0	0	0	0	1	1	1	0	0
Pads and Roads	3	Cat 623 Water Wagon	E	0	0	0	0	0	0	0	1	1	1	0	0
Pads and Roads	4	Cat 875 Challenger	E	0	0	0	0	0	0	0	1	1	1	0	0
Pads and Roads	4	Cat D6	E	0	0	0	0	0	0	0	1	1	1	0	0
Pads and Roads	4	Cat 14 Grader	E	0	0	0	0	0	0	0	1	1	1	0	0
Pads and Roads	4	Cat 623 Water Wagon	E	0	0	0	0	0	0	0	1	1	1	0	0
Pads and Roads	9	Cat 875 Challenger	E	0	0	0	0	0	0	0	1	1	1	0	0
Pads and Roads	9	Cat D6	E	0	0	0	0	0	0	0	1	1	1	0	0
Pads and Roads	9	Cat 14 Grader	E	0	0	0	0	0	0	0	1	1	1	0	0
Pads and Roads	9	Cat 623 Water Wagon	E	0	0	0	0	0	0	0	1	1	1	0	0
Pads and Roads	10	Cat 815 Compactor	E	0	0	0	0	0	0	0	1	1	1	0	0
Pads and Roads	10	PICKUP,1/2 TON,2X4	E	0	0	0	0	0	0	0	1	1	1	0	0
Pads and Roads	12	Cat 875 Challenger	E	0	0	0	0	0	0	0	1	1	1	0	0
Pads and Roads	12	Cat D6	E	0	0	0	0	0	0	0	1	1	1	0	0
Pads and Roads	12	Cat 14 Grader	E	0	0	0	0	0	0	0	1	1	1	0	0
Pads and Roads	12	Cat 623 Water Wagon	E	0	0	0	0	0	0	0	1	1	1	0	0
Pads and Roads	1	Cat 875 Challenger	E	0	0	0	0	0	0	1	1	1	1	0	0
Pads and Roads	1	Cat D6	E	0	0	0	0	0	0	1	1	1	1	0	0
Pads and Roads	1	Cat 14 Grader	E	0	0	0	0	0	0	1	1	1	1	0	0
Pads and Roads	1	Cat 623 Water Wagon	E	0	0	0	0	0	0	1	1	1	1	0	0
Pads and Roads	7	Cat 815 Compactor	E	0	0	0	0	0	0	0	0	2	2	0	0
Pads and Roads	7	PICKUP,1/2 TON,2X4	E	0	0	0	0	0	0	0	0	2	2	0	0
Pads and Roads	11	Cat 815 Compactor	E	0	0	0	0	0	0	0	0	2	2	0	0
Pads and Roads	11	PICKUP,1/2 TON,2X4	E	0	0	0	0	0	0	0	0	2	2	0	0
Pads and Roads	15	PICKUP,1/2 TON,2X4	E	0	0	0	0	0	0	0	0	2	2	0	0
Pads and Roads	2	PICKUP,1/2 TON,2X4	E	0	0	0	0	0	0	0	2	2	2	0	0
Pads and Roads	3	PICKUP,1/2 TON,2X4	E	0	0	0	0	0	0	0	2	2	2	0	0
Pads and Roads	4	PICKUP,1/2 TON,2X4	E	0	0	0	0	0	0	0	2	2	2	0	0
Pads and Roads	9	PICKUP,1/2 TON,2X4	E	0	0	0	0	0	0	0	2	2	2	0	0
Pads and Roads	12	PICKUP,1/2 TON,2X4	E	0	0	0	0	0	0	0	2	2	2	0	0
Pads and Roads	16	Cat 875 Challenger	E	0	0	0	1	1	1	1	1	1	1	0	0
Pads and Roads	16	Cat D6	E	0	0	0	1	1	1	1	1	1	1	0	0
Pads and Roads	16	Cat 14 Grader	E	0	0	0	1	1	1	1	1	1	1	0	0
Pads and Roads	16	Cat 623 Water Wagon	E	0	0	0	1	1	1	1	1	1	1	0	0
Pads and Roads	-2	Cat 875 Challenger	E	0	0	1	1	1	1	1	1	1	1	0	0
Pads and Roads	-2	Cat D6	E	0	0	1	1	1	1	1	1	1	1	0	0
Pads and Roads	-2	Cat 14 Grader	E	0	0	1	1	1	1	1	1	1	1	0	0
Pads and Roads	-2	Cat 623 Water Wagon	E	0	0	1	1	1	1	1	1	1	1	0	0
Pads and Roads	-1	Cat 875 Challenger	E	0	0	1	1	1	1	1	1	1	1	0	0
Pads and Roads	-1	Cat D6	E	0	0	1	1	1	1	1	1	1	1	0	0
Pads and Roads	-1	Cat 14 Grader	E	0	0	1	1	1	1	1	1	1	1	0	0
Pads and Roads	-1	Cat 623 Water Wagon	E	0	0	1	1	1	1	1	1	1	1	0	0
Pads and Roads	1	PICKUP,1/2 TON,2X4	E	0	0	0	0	0	0	2	2	2	2	0	0
Pads and Roads	15	Cat 815 Compactor	E	0	0	0	0	0	0	0	0	4	4	0	0
Pads and Roads	1	Cat 815 Compactor	E	0	0	0	0	0	0	3	3	3	3	0	0
Pads and Roads	2	Cat 815 Compactor	E	0	0	0	0	0	0	0	4	4	4	0	0
Pads and Roads	3	Cat 815 Compactor	E	0	0	0	0	0	0	0	4	4	4	0	0
Pads and Roads	4	Cat 815 Compactor	E	0	0	0	0	0	0	0	4	4	4	0	0
Pads and Roads	9	Cat 815 Compactor	E	0	0	0	0	0	0	0	4	4	4	0	0
Pads and Roads	12	Cat 815 Compactor	E	0	0	0	0	0	0	0	4	4	4	0	0
Pads and Roads	16	PICKUP,1/2 TON,2X4	E	0	0	0	2	2	2	2	2	2	2	0	0
Pads and Roads	-2	PICKUP,1/2 TON,2X4	E	0	0	2	2	2	2	2	2	2	2	0	0
Pads and Roads	-1	PICKUP,1/2 TON,2X4	E	0	0	2	2	2	2	2	2	2	2	0	0
Pads and Roads	5	Cat 875 Challenger	E	2	2	2	2	2	2	2	2	2	2	2	2
Pads and Roads	5	Cat D6	E	2	2	2	2	2	2	2	2	2	2	2	2
Pads and Roads	5	Cat 14 Grader	E	2	2	2	2	2	2	2	2	2	2	2	2
Pads and Roads	5	Cat 623 Water Wagon	E	2	2	2	2	2	2	2	2	2	2	2	2
Pads and Roads	5	GENERATOR,6-10KW,DIESEL	E	2	2	2	2	2	2	2	2	2	2	2	2

Construction Equipment Listing and Schedule

Activity	Year	Labor/Equipment	T	1	2	3	4	5	6	7	8	9	10	11	12
Pads and Roads	5	MECHANIC'S TRUCK,1.5 TON,2X4	E	2	2	2	2	2	2	2	2	2	2	2	2
Pads and Roads	16	Cat 815 Compactor	E	0	0	0	4	4	4	4	4	4	4	0	0
Pads and Roads	-2	Cat 815 Compactor	E	0	0	4	4	4	4	4	4	4	4	0	0
Pads and Roads	-1	Cat 815 Compactor	E	0	0	4	4	4	4	4	4	4	4	0	0
Pads and Roads	5	PICKUP,1/2 TON,2X4	E	3	3	3	3	3	3	3	3	3	3	3	3
Pads and Roads	5	Cat 815 Compactor	E	7	7	7	7	7	7	7	7	7	7	7	7
Power	4	BOOMTRUCK,23-28 TON	E				1								
Power	4	TRAILER,POLE	E				1								
Power	4	TRUCK,2 TON,2X4,BUCKET	E				1								
Power	4	TRUCK,2 TON,2X4,DIGGER	E				1								
Power	4	PICKUP,3/4 TON,4X4,CREWCAB	E				1								
Power	11	BOOMTRUCK,23-28 TON	E				1								
Power	11	TRAILER,POLE	E				1								
Power	11	TRAILER,CABLE PULLER,20-30K PULL	E				1								
Power	11	TRUCK,2 TON,2X4,DIGGER	E				1								
Power	11	UTILITY TRUCK,1 TON Cable Tensioner	E				1								
Power	12	BOOMTRUCK,23-28 TON	E				1								
Power	12	TRAILER,POLE	E				1								
Power	12	TRAILER,CABLE PULLER,20-30K PULL	E				1								
Power	12	TRUCK,2 TON,2X4,DIGGER	E				1								
Power	12	UTILITY TRUCK,1 TON Cable Tensioner	E				1								
Power	13	BOOMTRUCK,23-28 TON	E				1								
Power	13	TRAILER,POLE	E				1								
Power	13	TRAILER,CABLE PULLER,20-30K PULL	E				1								
Power	13	TRUCK,2 TON,2X4,DIGGER	E				1								
Power	13	UTILITY TRUCK,1 TON Cable Tensioner	E				1								
Power	14	BOOMTRUCK,23-28 TON	E				1								
Power	14	TRAILER,POLE	E				1								
Power	14	TRAILER,CABLE PULLER,20-30K PULL	E				1								
Power	14	TRUCK,2 TON,2X4,DIGGER	E				1								
Power	14	UTILITY TRUCK,1 TON Cable Tensioner	E				1								
Power	15	BOOMTRUCK,23-28 TON	E				1								
Power	15	TRAILER,POLE	E				1								
Power	15	TRAILER,CABLE PULLER,20-30K PULL	E				1								
Power	15	TRUCK,2 TON,2X4,DIGGER	E				1								
Power	15	UTILITY TRUCK,1 TON Cable Tensioner	E				1								
Power	16	BOOMTRUCK,23-28 TON	E				1								
Power	16	TRAILER,POLE	E				1								
Power	16	TRAILER,CABLE PULLER,20-30K PULL	E				1								
Power	16	TRUCK,2 TON,2X4,DIGGER	E				1								
Power	16	UTILITY TRUCK,1 TON Cable Tensioner	E				1								
Power	17	BOOMTRUCK,23-28 TON	E				1								
Power	17	TRAILER,POLE	E				1								
Power	17	TRAILER,CABLE PULLER,20-30K PULL	E				1								
Power	17	TRUCK,2 TON,2X4,DIGGER	E				1								
Power	17	UTILITY TRUCK,1 TON Cable Tensioner	E				1								
Power	18	BOOMTRUCK,23-28 TON	E				1								
Power	18	TRAILER,POLE	E				1								
Power	18	TRAILER,CABLE PULLER,20-30K PULL	E				1								
Power	18	TRUCK,2 TON,2X4,DIGGER	E				1								
Power	18	UTILITY TRUCK,1 TON Cable Tensioner	E				1								
Power	5	BOOMTRUCK,23-28 TON	E				1	1							
Power	5	TRAILER,POLE	E				1	1							
Power	5	TRAILER,CABLE PULLER,20-30K PULL	E				1	1							
Power	5	TRUCK,2 TON,2X4,DIGGER	E				1	1							
Power	5	UTILITY TRUCK,1 TON Cable Tensioner	E				1	1							
Power	6	BOOMTRUCK,23-28 TON	E				1	1							
Power	6	TRAILER,POLE	E				1	1							
Power	6	TRAILER,CABLE PULLER,20-30K PULL	E				1	1							
Power	6	TRUCK,2 TON,2X4,DIGGER	E				1	1							
Power	6	PICKUP,3/4 TON,4X4,DIESEL,SUPERCAB	E				1	1							
Power	6	UTILITY TRUCK,1 TON Cable Tensioner	E				1	1							
Power	9	BOOMTRUCK,23-28 TON	E				1	1							
Power	9	TRAILER,POLE	E				1	1							
Power	9	TRAILER,CABLE PULLER,20-30K PULL	E				1	1							
Power	9	TRUCK,2 TON,2X4,DIGGER	E				1	1							
Power	9	UTILITY TRUCK,1 TON Cable Tensioner	E				1	1							

Construction Equipment Listing and Schedule

Activity	Year	Labor/Equipment	T	1	2	3	4	5	6	7	8	9	10	11	12
Power	10	BOOMTRUCK,23-28 TON	E				1	1							
Power	10	TRAILER,POLE	E				1	1							
Power	10	TRAILER,CABLE PULLER,20-30K PULL	E				1	1							
Power	10	TRUCK,2 TON,2X4,DIGGER	E				1	1							
Power	10	UTILITY TRUCK,1 TON Cable Tensioner	E				1	1							
Power	11	TRUCK,2 TON,2X4,BUCKET	E				2								
Power	11	PICKUP,3/4 TON,4X4,CREWCAB	E				2								
Power	12	TRUCK,2 TON,2X4,BUCKET	E				2								
Power	12	PICKUP,3/4 TON,4X4,CREWCAB	E				2								
Power	13	TRUCK,2 TON,2X4,BUCKET	E				2								
Power	13	PICKUP,3/4 TON,4X4,CREWCAB	E				2								
Power	14	TRUCK,2 TON,2X4,BUCKET	E				2								
Power	14	PICKUP,3/4 TON,4X4,CREWCAB	E				2								
Power	15	TRUCK,2 TON,2X4,BUCKET	E				2								
Power	15	PICKUP,3/4 TON,4X4,CREWCAB	E				2								
Power	16	TRUCK,2 TON,2X4,BUCKET	E				2								
Power	16	PICKUP,3/4 TON,4X4,CREWCAB	E				2								
Power	17	TRUCK,2 TON,2X4,BUCKET	E				2								
Power	17	PICKUP,3/4 TON,4X4,CREWCAB	E				2								
Power	18	TRUCK,2 TON,2X4,BUCKET	E				2								
Power	18	PICKUP,3/4 TON,4X4,CREWCAB	E				2								
Power	1	BOOMTRUCK,23-28 TON	E				1	1	1						
Power	1	TRAILER,POLE	E				1	1	1						
Power	1	TRAILER,CABLE PULLER,20-30K PULL	E				1	1	1						
Power	1	TRUCK,2 TON,2X4,DIGGER	E				1	1	1						
Power	1	UTILITY TRUCK,1 TON Cable Tensioner	E				1	1	1						
Power	2	BOOMTRUCK,23-28 TON	E				1	1	1						
Power	2	TRAILER,POLE	E				1	1	1						
Power	2	TRAILER,CABLE PULLER,20-30K PULL	E				1	1	1						
Power	2	TRUCK,2 TON,2X4,DIGGER	E				1	1	1						
Power	2	UTILITY TRUCK,1 TON Cable Tensioner	E				1	1	1						
Power	3	BOOMTRUCK,23-28 TON	E				1	1	1						
Power	3	TRAILER,POLE	E				1	1	1						
Power	3	TRAILER,CABLE PULLER,20-30K PULL	E				1	1	1						
Power	3	TRUCK,2 TON,2X4,DIGGER	E				1	1	1						
Power	3	UTILITY TRUCK,1 TON Cable Tensioner	E				1	1	1						
Power	5	TRUCK,2 TON,2X4,BUCKET	E				2	2							
Power	5	PICKUP,3/4 TON,4X4,CREWCAB	E				2	2							
Power	6	TRUCK,2 TON,2X4,BUCKET	E				2	2							
Power	6	PICKUP,3/4 TON,4X4,CREWCAB	E				2	2							
Power	9	TRUCK,2 TON,2X4,BUCKET	E				2	2							
Power	9	PICKUP,3/4 TON,4X4,CREWCAB	E				2	2							
Power	10	TRUCK,2 TON,2X4,BUCKET	E				2	2							
Power	10	PICKUP,3/4 TON,4X4,CREWCAB	E				2	2							
Power	-1	BOOMTRUCK,23-28 TON	E				1	1	1	1	1				
Power	-1	TRAILER,POLE	E				1	1	1	1	1				
Power	-1	TRAILER,CABLE PULLER,20-30K PULL	E				1	1	1	1	1				
Power	-1	TRUCK,2 TON,2X4,DIGGER	E				1	1	1	1	1				
Power	-1	UTILITY TRUCK,1 TON Cable Tensioner	E				1	1	1	1	1				
Power	1	TRUCK,2 TON,2X4,BUCKET	E				2	2	2						
Power	1	PICKUP,3/4 TON,4X4,CREWCAB	E				2	2	2						
Power	2	TRUCK,2 TON,2X4,BUCKET	E				2	2	2						
Power	2	PICKUP,3/4 TON,4X4,CREWCAB	E				2	2	2						
Power	3	TRUCK,2 TON,2X4,BUCKET	E				2	2	2						
Power	3	PICKUP,3/4 TON,4X4,CREWCAB	E				2	2	2						
Power	-1	PICKUP,3/4 TON,4X4,CREWCAB	E				2	2	2	2	2				
Power	-1	TRUCK,2 TON,2X4,BUCKET	E				3	3	3	3	3				
Steam Gen	-1	MANLIFT,40' RT,GAS OR DSL	E												1
Steam Gen	-1	PIPE BEVELER,14-42",FLEX BAND,ELECTRIC	E												1
Steam Gen	4	MANLIFT,40' RT,GAS OR DSL	E											1	
Steam Gen	4	PIPE BEVELER,14-42",FLEX BAND,ELECTRIC	E											1	
Steam Gen	-1	COMPACTOR,40-66" ROLLER,RIDE ON	E						1	1					
Steam Gen	-1	POWER TROWEL,36"-48",GAS	E						1	1					
Steam Gen	-1	REBAR BENDER,#2-#8 BAR ELEC	E				1	1							
Steam Gen	-1	TROWEL,36-48",WALK BEHIND	E						1	1					
Steam Gen	-1	CONCRETE VIBRATOR,HEAVY DUTY	E						1	1					
Steam Gen	-1	WHEEL LOADER,3.5-4.0CY	E						1	1					

Construction Equipment Listing and Schedule

Activity	Year	Labor/Equipment	T	1	2	3	4	5	6	7	8	9	10	11	12
Steam Gen	-1	BACKHOE/LOADER,1.25-1.50CY	E						1	1					
Steam Gen	-1	CRANE,10-14 TON,HYDRAULIC,RT	E								1	1			
Steam Gen	-1	CUTTING TORCH,FLEX TRACK,MAG	E												2
Steam Gen	-1	CONDUIT BENDER,1/2-2",ELECTRIC	E											1	1
Steam Gen	4	POWER TROWEL,36"-48",GAS	E					1	1						
Steam Gen	4	REBAR BENDER,#2-#8 BAR ELEC	E			1	1								
Steam Gen	4	TROWEL,36-48",WALK BEHIND	E					1	1						
Steam Gen	4	CONCRETE VIBRATOR,HEAVY DUTY	E					1	1						
Steam Gen	4	EXCAVATOR, 10-14K#,MINI	E	1	1										
Steam Gen	4	EXCAVATOR,50-60K#	E	1	1										
Steam Gen	4	CRANE,10-14 TON,HYDRAULIC,RT	E							1	1				
Steam Gen	4	CUTTING TORCH,FLEX TRACK,MAG	E											2	
Steam Gen	4	CONDUIT BENDER,1/2-2",ELECTRIC	E										1	1	
Steam Gen	-1	WELDER,250-300 AMP DIESEL	E												3
Steam Gen	4	WELDER,250-300 AMP DIESEL	E											3	
Steam Gen	-1	TAMPER,100-150#	E						2	2					
Steam Gen	-1	FLATBED,1.5 TON,4X4	E				1					1	1	1	
Steam Gen	4	WHEEL LOADER,3.5-4.0CY	E	1	1			1	1						
Steam Gen	-1	PICKUP,1/2 TON,4X4,SUPERCAB	E				1	1				1	1	1	
Steam Gen	4	COMPACTOR,40-66" ROLLER,RIDE ON	E	2	2			1	1						
Steam Gen	4	BACKHOE/LOADER,1.25-1.50CY	E	2	2			1	1						
Steam Gen	4	FLATBED,1.5 TON,4X4	E	1	1	1					1	1	1		
Steam Gen	4	PICKUP,1/2 TON,4X4,SUPERCAB	E	1	1	1	1				1	1	1		
Steam Gen	4	TAMPER,100-150#	E	2	2			2	2						
Steam Gen	-1	COMPRESSOR,100-200 CFM,DIESEL	E				1	1	1	1	1	1	1	1	1
Steam Gen	-1	GENERATOR,6-10KW,DIESEL	E				1	1	1	1	1	1	1	1	1
Steam Gen	4	COMPRESSOR,100-200 CFM,DIESEL	E		1	1	1	1	1	1	1	1	1	1	
Steam Gen	4	GENERATOR,6-10KW,DIESEL	E	1	1	1	1	1	1	1	1	1	1	1	
Steam Gen	4	PICKUP,1/2 TON,2X4	E	2	3	3	2	2	2	2	2	2	2	2	
Steam Gen	-1	PICKUP,1/2 TON,2X4	E	2	2	2	3	2	2	2	2	2	2	2	2
Substation	-3	BORING SYSTEM,30-36",AUGER,DIESEL	E				0.2								
Substation	-3	CRANE,70-79 TON,HYDRAULIC,RT	E						0.3						
Substation	-3	TRUCK,3/4 TON,2X4,ELECT. MAINT	E						0.3						
Substation	-3	COMPACTOR,24-33" ROLLER,WALKBEHIND	E				0.5								
Substation	-3	TRENCHER,3-5'	E					0.5							
Substation	-3	MANLIFT,60' RT,GAS OR DSL	E						0.3	0.3					
Substation	-3	MORTAR MIXER,6-9 CU FT	E				1								
Substation	-3	REBAR BENDER,#2-#8 BAR ELEC	E				1								
Substation	-3	CONCRETE VIBRATOR,HEAVY DUTY	E				1								
Substation	-3	MANLIFT,40' RT,GAS OR DSL	E					0.3	0.5	0.3					
Substation	-3	LOADER,SKIDSTEER 36-45HP	E				1	1							
Substation	-3	BACKHOE/LOADER,1-1.25CY	E				1	1							
Substation	-3	FORKLIFT,7-9K#,YARD	E				1	1							
Substation	-3	COMPRESSOR,100-200 CFM,DIESEL	E				1	1	1						
Substation	-3	PICKUP,3/4 TON,4X4,CREWCAB	E					1	1	1					
Substation	-3	PICKUP,1/2 TON,2X4,CREWCAB	E				2	2							
Substation	-3	GENERATOR,5-7KW,GASOLINE	E				2	2	2	1					

Drilling and Well Hookup Equipment Hours per Month

Activity	Year	Labor/Equipment	T	1	2	3	4	5	6	7	8	9	10	11	12
Hookups	-2	BACKHOE/LOADER,1.25-1.50CY	E	0	0	0	0	0	0	0	0	25	25	0	0
Hookups	-2	TRUCK,1.5 TON,2X4,W/CRANE	E	0	0	0	0	0	0	0	0	50	50	0	0
Hookups	-2	TRUCK,2.5 TON,2X4,A-FRAME	E	0	0	0	0	0	0	0	0	25	25	0	0
Hookups	-2	PICKUP,3/4 TON,4X4,CREWCAB	E	0	0	0	0	0	0	0	0	50	50	0	0
Hookups	-2	CRANE,2.5 TON,HYDRAULIC,RT	E	0	0	0	0	0	0	0	0	75	75	0	0
Hookups	-2	WELDER,500-800 AMP DIESEL MULTI PURPOSE	E	0	0	0	0	0	0	0	0	75	75	0	0
Hookups	-2	CRANE,55-60 TON,HYDRAULIC,RT	E	0	0	0	0	0	0	0	0	25	25	0	0
Hookups	-2	ROAD TRACTOR,4X6	E	0	0	0	0	0	0	0	0	75	75	0	0
Hookups	-2	FLATBED,1.5 TON,2X4,CREWCAB	E	0	0	0	0	0	0	0	0	75	75	0	0
Drilling	-2	Generator Engine Run Time	E	0	0	0	0	0	0	0	0	510	510	0	0
Drilling	-2	Mud Pump Engine Run Time	E	0	0	0	0	0	0	0	0	378	378	0	0
Drilling	-2	F250 Pickup	E	0	0	0	0	0	0	0	0	281	281	0	0
Drilling	-2	Cement Pump Truck	E	0	0	0	0	0	0	0	0	45	45	0	0
Drilling	-2	Cement Bulk Truck	E	0	0	0	0	0	0	0	0	45	45	0	0
Drilling	-2	Wireline Truck	E	0	0	0	0	0	0	0	0	45	45	0	0
Drilling	-2	Vaccum Truck	E	0	0	0	0	0	0	0	0	180	180	0	0
Hookups	-1	BACKHOE/LOADER,1.25-1.50CY	E	77	77	77	77	77	77	77	77	77	77	77	77
Hookups	-1	TRUCK,1.5 TON,2X4,W/CRANE	E	107	107	107	107	107	107	107	107	107	107	107	107
Hookups	-1	TRUCK,2.5 TON,2X4,A-FRAME	E	170	170	170	170	170	170	170	170	170	170	170	170
Hookups	-1	PICKUP,3/4 TON,4X4,CREWCAB	E	247	247	247	247	247	247	247	247	247	247	247	247
Hookups	-1	CRANE,2.5 TON,HYDRAULIC,RT	E	137	137	137	137	137	137	137	137	137	137	137	137
Hookups	-1	WELDER,500-800 AMP DIESEL MULTI PURPOSE	E	231	231	231	231	231	231	231	231	231	231	231	231
Hookups	-1	CRANE,55-60 TON,HYDRAULIC,RT	E	30	30	30	30	30	30	30	30	30	30	30	30
Hookups	-1	ROAD TRACTOR,4X6	E	91	91	91	91	91	91	91	91	91	91	91	91
Hookups	-1	FLATBED,1.5 TON,2X4,CREWCAB	E	91	91	91	91	91	91	91	91	91	91	91	91
Drilling	-1	Generator Engine Run Time	E	1370	1370	1370	1370	1370	1370	1370	1370	1370	1370	1370	1370
Drilling	-1	Mud Pump Engine Run Time	E	1020	1020	1020	1020	1020	1020	1020	1020	1020	1020	1020	1020
Drilling	-1	F250 Pickup	E	817	817	817	817	817	817	817	817	817	817	817	817
Drilling	-1	Cement Pump Truck	E	131	131	131	131	131	131	131	131	131	131	131	131
Drilling	-1	Cement Bulk Truck	E	131	131	131	131	131	131	131	131	131	131	131	131
Drilling	-1	Wireline Truck	E	131	131	131	131	131	131	131	131	131	131	131	131
Drilling	-1	Vaccum Truck	E	523	523	523	523	523	523	523	523	523	523	523	523
Hookups	1	BACKHOE/LOADER,1.25-1.50CY	E	0	0	0	0	0	0	0	0	0	0	0	0
Hookups	1	TRUCK,1.5 TON,2X4,W/CRANE	E	0	0	0	0	0	0	0	0	0	0	0	0
Hookups	1	TRUCK,2.5 TON,2X4,A-FRAME	E	0	0	0	0	0	0	0	0	0	0	0	0
Hookups	1	PICKUP,3/4 TON,4X4,CREWCAB	E	0	0	0	0	0	0	0	0	0	0	0	0
Hookups	1	CRANE,2.5 TON,HYDRAULIC,RT	E	0	0	0	0	0	0	0	0	0	0	0	0
Hookups	1	WELDER,500-800 AMP DIESEL MULTI PURPOSE	E	0	0	0	0	0	0	0	0	0	0	0	0
Hookups	1	CRANE,55-60 TON,HYDRAULIC,RT	E	0	0	0	0	0	0	0	0	0	0	0	0
Hookups	1	ROAD TRACTOR,4X6	E	0	0	0	0	0	0	0	0	0	0	0	0
Hookups	1	FLATBED,1.5 TON,2X4,CREWCAB	E	0	0	0	0	0	0	0	0	0	0	0	0
Drilling	1	Generator Engine Run Time	E	0	0	0	0	0	0	0	0	0	0	0	0
Drilling	1	Mud Pump Engine Run Time	E	0	0	0	0	0	0	0	0	0	0	0	0
Drilling	1	F250 Pickup	E	0	0	0	0	0	0	0	0	0	0	0	0
Drilling	1	Cement Pump Truck	E	0	0	0	0	0	0	0	0	0	0	0	0
Drilling	1	Cement Bulk Truck	E	0	0	0	0	0	0	0	0	0	0	0	0
Drilling	1	Wireline Truck	E	0	0	0	0	0	0	0	0	0	0	0	0
Drilling	1	Vaccum Truck	E	0	0	0	0	0	0	0	0	0	0	0	0
Hookups	2	BACKHOE/LOADER,1.25-1.50CY	E	0	0	0	0	0	0	0	0	0	20	0	0
Hookups	2	TRUCK,1.5 TON,2X4,W/CRANE	E	0	0	0	0	0	0	0	0	0	30	0	0
Hookups	2	TRUCK,2.5 TON,2X4,A-FRAME	E	0	0	0	0	0	0	0	0	0	40	0	0
Hookups	2	PICKUP,3/4 TON,4X4,CREWCAB	E	0	0	0	0	0	0	0	0	0	60	0	0
Hookups	2	CRANE,2.5 TON,HYDRAULIC,RT	E	0	0	0	0	0	0	0	0	0	40	0	0
Hookups	2	WELDER,500-800 AMP DIESEL MULTI PURPOSE	E	0	0	0	0	0	0	0	0	0	60	0	0
Hookups	2	CRANE,55-60 TON,HYDRAULIC,RT	E	0	0	0	0	0	0	0	0	0	10	0	0
Hookups	2	ROAD TRACTOR,4X6	E	0	0	0	0	0	0	0	0	0	30	0	0
Hookups	2	FLATBED,1.5 TON,2X4,CREWCAB	E	0	0	0	0	0	0	0	0	0	30	0	0
Drilling	2	Generator Engine Run Time	E	0	0	0	0	0	0	0	0	0	384	0	0
Drilling	2	Mud Pump Engine Run Time	E	0	0	0	0	0	0	0	0	0	286	0	0
Drilling	2	F250 Pickup	E	0	0	0	0	0	0	0	0	0	225	0	0
Drilling	2	Cement Pump Truck	E	0	0	0	0	0	0	0	0	0	36	0	0
Drilling	2	Cement Bulk Truck	E	0	0	0	0	0	0	0	0	0	36	0	0
Drilling	2	Wireline Truck	E	0	0	0	0	0	0	0	0	0	36	0	0
Drilling	2	Vaccum Truck	E	0	0	0	0	0	0	0	0	0	144	0	0
Hookups	3	BACKHOE/LOADER,1.25-1.50CY	E	0	0	0	0	0	0	0	0	0	20	0	0
Hookups	3	TRUCK,1.5 TON,2X4,W/CRANE	E	0	0	0	0	0	0	0	0	0	40	0	0
Hookups	3	TRUCK,2.5 TON,2X4,A-FRAME	E	0	0	0	0	0	0	0	0	0	20	0	0
Hookups	3	PICKUP,3/4 TON,4X4,CREWCAB	E	0	0	0	0	0	0	0	0	0	40	0	0
Hookups	3	CRANE,2.5 TON,HYDRAULIC,RT	E	0	0	0	0	0	0	0	0	0	60	0	0
Hookups	3	WELDER,500-800 AMP DIESEL MULTI PURPOSE	E	0	0	0	0	0	0	0	0	0	60	0	0
Hookups	3	CRANE,55-60 TON,HYDRAULIC,RT	E	0	0	0	0	0	0	0	0	0	20	0	0
Hookups	3	ROAD TRACTOR,4X6	E	0	0	0	0	0	0	0	0	0	60	0	0
Hookups	3	FLATBED,1.5 TON,2X4,CREWCAB	E	0	0	0	0	0	0	0	0	0	60	0	0
Drilling	3	Generator Engine Run Time	E	0	0	0	0	0	0	0	0	0	408	0	0
Drilling	3	Mud Pump Engine Run Time	E	0	0	0	0	0	0	0	0	0	302	0	0
Drilling	3	F250 Pickup	E	0	0	0	0	0	0	0	0	0	225	0	0
Drilling	3	Cement Pump Truck	E	0	0	0	0	0	0	0	0	0	36	0	0
Drilling	3	Cement Bulk Truck	E	0	0	0	0	0	0	0	0	0	36	0	0
Drilling	3	Wireline Truck	E	0	0	0	0	0	0	0	0	0	36	0	0
Drilling	3	Vaccum Truck	E	0	0	0	0	0	0	0	0	0	144	0	0
Hookups	4	BACKHOE/LOADER,1.25-1.50CY	E	0	0	0	0	0	0	0	0	0	20	0	0
Hookups	4	TRUCK,1.5 TON,2X4,W/CRANE	E	0	0	0	0	0	0	0	0	0	40	0	0
Hookups	4	TRUCK,2.5 TON,2X4,A-FRAME	E	0	0	0	0	0	0	0	0	0	20	0	0
Hookups	4	PICKUP,3/4 TON,4X4,CREWCAB	E	0	0	0	0	0	0	0	0	0	40	0	0
Hookups	4	CRANE,2.5 TON,HYDRAULIC,RT	E	0	0	0	0	0	0	0	0	0	60	0	0
Hookups	4	WELDER,500-800 AMP DIESEL MULTI PURPOSE	E	0	0	0	0	0	0	0	0	0	60	0	0
Hookups	4	CRANE,55-60 TON,HYDRAULIC,RT	E	0	0	0	0	0	0	0	0	0	20	0	0
Hookups	4	ROAD TRACTOR,4X6	E	0	0	0	0	0	0	0	0	0	60	0	0
Hookups	4	FLATBED,1.5 TON,2X4,CREWCAB	E	0	0	0	0	0	0	0	0	0	60	0	0
Drilling	4	Generator Engine Run Time	E	0	0	0	0	0	0	0	0	0	408	0	0
Drilling	4	Mud Pump Engine Run Time	E	0	0	0	0	0	0	0	0	0	302	0	0
Drilling	4	F250 Pickup	E	0	0	0	0	0	0	0	0	0	225	0	0
Drilling	4	Cement Pump Truck	E	0	0	0	0	0	0	0	0	0	36	0	0
Drilling	4	Cement Bulk Truck	E	0	0	0	0	0	0	0	0	0	36	0	0

Drilling	4	Wireline Truck	E	0	0	0	0	0	0	0	0	0	36	0	0
Drilling	4	Vaccum Truck	E	0	0	0	0	0	0	0	0	0	144	0	0
Hookups	5	BACKHOE/LOADER,1.25-1.50CY	E	76	76	76	76	76	76	76	76	76	76	76	76
Hookups	5	TRUCK,1.5 TON,2X4,W/CRANE	E	115	115	115	115	115	115	115	115	115	115	115	115
Hookups	5	TRUCK,2.5 TON,2X4,A-FRAME	E	147	147	147	147	147	147	147	147	147	147	147	147
Hookups	5	PICKUP,3/4 TON,4X4,CREWCAB	E	223	223	223	223	223	223	223	223	223	223	223	223
Hookups	5	CRANE,2.5 TON,HYDRAULIC,RT	E	155	155	155	155	155	155	155	155	155	155	155	155
Hookups	5	WELDER,500-800 AMP DIESEL MULTI PURPOSE	E	227	227	227	227	227	227	227	227	227	227	227	227
Hookups	5	CRANE,55-60 TON,HYDRAULIC,RT	E	40	40	40	40	40	40	40	40	40	40	40	40
Hookups	5	ROAD TRACTOR,4X6	E	119	119	119	119	119	119	119	119	119	119	119	119
Hookups	5	FLATBED,1.5 TON,2X4,CREWCAB	E	119	119	119	119	119	119	119	119	119	119	119	119
Drilling	5	Generator Engine Run Time	E	1454	1454	1454	1454	1454	1454	1454	1454	1454	1454	1454	1454
Drilling	5	Mud Pump Engine Run Time	E	1081	1081	1081	1081	1081	1081	1081	1081	1081	1081	1081	1081
Drilling	5	F250 Pickup	E	849	849	849	849	849	849	849	849	849	849	849	849
Drilling	5	Cement Pump Truck	E	136	136	136	136	136	136	136	136	136	136	136	136
Drilling	5	Cement Bulk Truck	E	136	136	136	136	136	136	136	136	136	136	136	136
Drilling	5	Wireline Truck	E	136	136	136	136	136	136	136	136	136	136	136	136
Drilling	5	Vaccum Truck	E	544	544	544	544	544	544	544	544	544	544	544	544
Hookups	6	BACKHOE/LOADER,1.25-1.50CY	E	0	0	0	0	0	0	0	0	20	20	0	0
Hookups	6	TRUCK,1.5 TON,2X4,W/CRANE	E	0	0	0	0	0	0	0	0	30	30	0	0
Hookups	6	TRUCK,2.5 TON,2X4,A-FRAME	E	0	0	0	0	0	0	0	0	40	40	0	0
Hookups	6	PICKUP,3/4 TON,4X4,CREWCAB	E	0	0	0	0	0	0	0	0	60	60	0	0
Hookups	6	CRANE,2.5 TON,HYDRAULIC,RT	E	0	0	0	0	0	0	0	0	40	40	0	0
Hookups	6	WELDER,500-800 AMP DIESEL MULTI PURPOSE	E	0	0	0	0	0	0	0	0	60	60	0	0
Hookups	6	CRANE,55-60 TON,HYDRAULIC,RT	E	0	0	0	0	0	0	0	0	10	10	0	0
Hookups	6	ROAD TRACTOR,4X6	E	0	0	0	0	0	0	0	0	30	30	0	0
Hookups	6	FLATBED,1.5 TON,2X4,CREWCAB	E	0	0	0	0	0	0	0	0	30	30	0	0
Drilling	6	Generator Engine Run Time	E	0	0	0	0	0	0	0	0	384	384	0	0
Drilling	6	Mud Pump Engine Run Time	E	0	0	0	0	0	0	0	0	286	286	0	0
Drilling	6	F250 Pickup	E	0	0	0	0	0	0	0	0	225	225	0	0
Drilling	6	Cement Pump Truck	E	0	0	0	0	0	0	0	0	36	36	0	0
Drilling	6	Cement Bulk Truck	E	0	0	0	0	0	0	0	0	36	36	0	0
Drilling	6	Wireline Truck	E	0	0	0	0	0	0	0	0	36	36	0	0
Drilling	6	Vaccum Truck	E	0	0	0	0	0	0	0	0	144	144	0	0
Hookups	7	BACKHOE/LOADER,1.25-1.50CY	E	0	0	0	0	0	30	30	30	30	30	0	0
Hookups	7	TRUCK,1.5 TON,2X4,W/CRANE	E	0	0	0	0	0	47	47	47	47	47	0	0
Hookups	7	TRUCK,2.5 TON,2X4,A-FRAME	E	0	0	0	0	0	58	58	58	58	58	0	0
Hookups	7	PICKUP,3/4 TON,4X4,CREWCAB	E	0	0	0	0	0	89	89	89	89	89	0	0
Hookups	7	CRANE,2.5 TON,HYDRAULIC,RT	E	0	0	0	0	0	63	63	63	63	63	0	0
Hookups	7	WELDER,500-800 AMP DIESEL MULTI PURPOSE	E	0	0	0	0	0	91	91	91	91	91	0	0
Hookups	7	CRANE,55-60 TON,HYDRAULIC,RT	E	0	0	0	0	0	16	16	16	16	16	0	0
Hookups	7	ROAD TRACTOR,4X6	E	0	0	0	0	0	49	49	49	49	49	0	0
Hookups	7	FLATBED,1.5 TON,2X4,CREWCAB	E	0	0	0	0	0	49	49	49	49	49	0	0
Drilling	7	Generator Engine Run Time	E	0	0	0	0	0	587	587	587	587	587	0	0
Drilling	7	Mud Pump Engine Run Time	E	0	0	0	0	0	436	436	436	436	436	0	0
Drilling	7	F250 Pickup	E	0	0	0	0	0	342	342	342	342	342	0	0
Drilling	7	Cement Pump Truck	E	0	0	0	0	0	55	55	55	55	55	0	0
Drilling	7	Cement Bulk Truck	E	0	0	0	0	0	55	55	55	55	55	0	0
Drilling	7	Wireline Truck	E	0	0	0	0	0	55	55	55	55	55	0	0
Drilling	7	Vaccum Truck	E	0	0	0	0	0	219	219	219	219	219	0	0
Hookups	8	BACKHOE/LOADER,1.25-1.50CY	E	0	0	0	0	0	0	0	0	30	30	0	0
Hookups	8	TRUCK,1.5 TON,2X4,W/CRANE	E	0	0	0	0	0	0	0	0	50	50	0	0
Hookups	8	TRUCK,2.5 TON,2X4,A-FRAME	E	0	0	0	0	0	0	0	0	50	50	0	0
Hookups	8	PICKUP,3/4 TON,4X4,CREWCAB	E	0	0	0	0	0	0	0	0	80	80	0	0
Hookups	8	CRANE,2.5 TON,HYDRAULIC,RT	E	0	0	0	0	0	0	0	0	70	70	0	0
Hookups	8	WELDER,500-800 AMP DIESEL MULTI PURPOSE	E	0	0	0	0	0	0	0	0	90	90	0	0
Hookups	8	CRANE,55-60 TON,HYDRAULIC,RT	E	0	0	0	0	0	0	0	0	20	20	0	0
Hookups	8	ROAD TRACTOR,4X6	E	0	0	0	0	0	0	0	0	60	60	0	0
Hookups	8	FLATBED,1.5 TON,2X4,CREWCAB	E	0	0	0	0	0	0	0	0	60	60	0	0
Drilling	8	Generator Engine Run Time	E	0	0	0	0	0	0	0	0	588	588	0	0
Drilling	8	Mud Pump Engine Run Time	E	0	0	0	0	0	0	0	0	437	437	0	0
Drilling	8	F250 Pickup	E	0	0	0	0	0	0	0	0	337	337	0	0
Drilling	8	Cement Pump Truck	E	0	0	0	0	0	0	0	0	54	54	0	0
Drilling	8	Cement Bulk Truck	E	0	0	0	0	0	0	0	0	54	54	0	0
Drilling	8	Wireline Truck	E	0	0	0	0	0	0	0	0	54	54	0	0
Drilling	8	Vaccum Truck	E	0	0	0	0	0	0	0	0	216	216	0	0
Hookups	9	BACKHOE/LOADER,1.25-1.50CY	E	0	0	0	0	0	0	0	0	25	25	0	0
Hookups	9	TRUCK,1.5 TON,2X4,W/CRANE	E	0	0	0	0	0	0	0	0	45	45	0	0
Hookups	9	TRUCK,2.5 TON,2X4,A-FRAME	E	0	0	0	0	0	0	0	0	35	35	0	0
Hookups	9	PICKUP,3/4 TON,4X4,CREWCAB	E	0	0	0	0	0	0	0	0	60	60	0	0
Hookups	9	CRANE,2.5 TON,HYDRAULIC,RT	E	0	0	0	0	0	0	0	0	65	65	0	0
Hookups	9	WELDER,500-800 AMP DIESEL MULTI PURPOSE	E	0	0	0	0	0	0	0	0	75	75	0	0
Hookups	9	CRANE,55-60 TON,HYDRAULIC,RT	E	0	0	0	0	0	0	0	0	20	20	0	0
Hookups	9	ROAD TRACTOR,4X6	E	0	0	0	0	0	0	0	0	60	60	0	0
Hookups	9	FLATBED,1.5 TON,2X4,CREWCAB	E	0	0	0	0	0	0	0	0	60	60	0	0
Drilling	9	Generator Engine Run Time	E	0	0	0	0	0	0	0	0	498	498	0	0
Drilling	9	Mud Pump Engine Run Time	E	0	0	0	0	0	0	0	0	370	370	0	0
Drilling	9	F250 Pickup	E	0	0	0	0	0	0	0	0	281	281	0	0
Drilling	9	Cement Pump Truck	E	0	0	0	0	0	0	0	0	45	45	0	0
Drilling	9	Cement Bulk Truck	E	0	0	0	0	0	0	0	0	45	45	0	0
Drilling	9	Wireline Truck	E	0	0	0	0	0	0	0	0	45	45	0	0
Drilling	9	Vaccum Truck	E	0	0	0	0	0	0	0	0	180	180	0	0
Hookups	10	BACKHOE/LOADER,1.25-1.50CY	E	0	0	0	0	0	0	35	35	35	35	0	0
Hookups	10	TRUCK,1.5 TON,2X4,W/CRANE	E	0	0	0	0	0	0	55	55	55	55	0	0
Hookups	10	TRUCK,2.5 TON,2X4,A-FRAME	E	0	0	0	0	0	0	65	65	65	65	0	0
Hookups	10	PICKUP,3/4 TON,4X4,CREWCAB	E	0	0	0	0	0	0	100	100	100	100	0	0
Hookups	10	CRANE,2.5 TON,HYDRAULIC,RT	E	0	0	0	0	0	0	74	74	74	74	0	0
Hookups	10	WELDER,500-800 AMP DIESEL MULTI PURPOSE	E	0	0	0	0	0	0	104	104	104	104	0	0
Hookups	10	CRANE,55-60 TON,HYDRAULIC,RT	E	0	0	0	0	0	0	20	20	20	20	0	0
Hookups	10	ROAD TRACTOR,4X6	E	0	0	0	0	0	0	59	59	59	59	0	0
Hookups	10	FLATBED,1.5 TON,2X4,CREWCAB	E	0	0	0	0	0	0	59	59	59	59	0	0
Drilling	10	Generator Engine Run Time	E	0	0	0	0	0	0	673	673	673	673	0	0
Drilling	10	Mud Pump Engine Run Time	E	0	0	0	0	0	0	500	500	500	500	0	0
Drilling	10	F250 Pickup	E	0	0	0	0	0	0	391	391	391	391	0	0
Drilling	10	Cement Pump Truck	E	0	0	0	0	0	0	63	63	63	63	0	0
Drilling	10	Cement Bulk Truck	E	0	0	0	0	0	0	63	63	63	63	0	0
Drilling	10	Wireline Truck	E	0	0	0	0	0	0	63	63	63	63	0	0

Drilling	10	Vaccum Truck	E	0	0	0	0	0	0	250	250	250	250	0	0
Hookups	11	BACKHOE/LOADER,1.25-1.50CY	E	0	0	0	0	36	36	36	36	36	36	0	0
Hookups	11	TRUCK,1.5 TON,2X4,W/CRANE	E	0	0	0	0	60	60	60	60	60	60	0	0
Hookups	11	TRUCK,2.5 TON,2X4,A-FRAME	E	0	0	0	0	59	59	59	59	59	59	0	0
Hookups	11	PICKUP,3/4 TON,4X4,CREWCAB	E	0	0	0	0	95	95	95	95	95	95	0	0
Hookups	11	CRANE,2.5 TON,HYDRAULIC,RT	E	0	0	0	0	84	84	84	84	84	84	0	0
Hookups	11	WELDER,500-800 AMP DIESEL MULTI PURPOSE	E	0	0	0	0	107	107	107	107	107	107	0	0
Hookups	11	CRANE,55-60 TON,HYDRAULIC,RT	E	0	0	0	0	24	24	24	24	24	24	0	0
Hookups	11	ROAD TRACTOR,4X6	E	0	0	0	0	72	72	72	72	72	72	0	0
Hookups	11	FLATBED,1.5 TON,2X4,CREWCAB	E	0	0	0	0	72	72	72	72	72	72	0	0
Drilling	11	Generator Engine Run Time	E	0	0	0	0	700	700	700	700	700	700	0	0
Drilling	11	Mud Pump Engine Run Time	E	0	0	0	0	520	520	520	520	520	520	0	0
Drilling	11	F250 Pickup	E	0	0	0	0	401	401	401	401	401	401	0	0
Drilling	11	Cement Pump Truck	E	0	0	0	0	64	64	64	64	64	64	0	0
Drilling	11	Cement Bulk Truck	E	0	0	0	0	64	64	64	64	64	64	0	0
Drilling	11	Wireline Truck	E	0	0	0	0	64	64	64	64	64	64	0	0
Drilling	11	Vaccum Truck	E	0	0	0	0	257	257	257	257	257	257	0	0
Hookups	12	BACKHOE/LOADER,1.25-1.50CY	E	0	0	0	0	0	0	36	36	36	36	0	0
Hookups	12	TRUCK,1.5 TON,2X4,W/CRANE	E	0	0	0	0	0	0	63	63	63	63	0	0
Hookups	12	TRUCK,2.5 TON,2X4,A-FRAME	E	0	0	0	0	0	0	56	56	56	56	0	0
Hookups	12	PICKUP,3/4 TON,4X4,CREWCAB	E	0	0	0	0	0	0	93	93	93	93	0	0
Hookups	12	CRANE,2.5 TON,HYDRAULIC,RT	E	0	0	0	0	0	0	89	89	89	89	0	0
Hookups	12	WELDER,500-800 AMP DIESEL MULTI PURPOSE	E	0	0	0	0	0	0	109	109	109	109	0	0
Hookups	12	CRANE,55-60 TON,HYDRAULIC,RT	E	0	0	0	0	0	0	26	26	26	26	0	0
Hookups	12	ROAD TRACTOR,4X6	E	0	0	0	0	0	0	79	79	79	79	0	0
Hookups	12	FLATBED,1.5 TON,2X4,CREWCAB	E	0	0	0	0	0	0	79	79	79	79	0	0
Drilling	12	Generator Engine Run Time	E	0	0	0	0	0	0	716	716	716	716	0	0
Drilling	12	Mud Pump Engine Run Time	E	0	0	0	0	0	0	531	531	531	531	0	0
Drilling	12	F250 Pickup	E	0	0	0	0	0	0	408	408	408	408	0	0
Drilling	12	Cement Pump Truck	E	0	0	0	0	0	0	65	65	65	65	0	0
Drilling	12	Cement Bulk Truck	E	0	0	0	0	0	0	65	65	65	65	0	0
Drilling	12	Wireline Truck	E	0	0	0	0	0	0	65	65	65	65	0	0
Drilling	12	Vaccum Truck	E	0	0	0	0	0	0	261	261	261	261	0	0
Hookups	13	BACKHOE/LOADER,1.25-1.50CY	E	0	0	0	0	0	32	32	32	32	32	0	0
Hookups	13	TRUCK,1.5 TON,2X4,W/CRANE	E	0	0	0	0	0	55	55	55	55	55	0	0
Hookups	13	TRUCK,2.5 TON,2X4,A-FRAME	E	0	0	0	0	0	48	48	48	48	48	0	0
Hookups	13	PICKUP,3/4 TON,4X4,CREWCAB	E	0	0	0	0	0	79	79	79	79	79	0	0
Hookups	13	CRANE,2.5 TON,HYDRAULIC,RT	E	0	0	0	0	0	79	79	79	79	79	0	0
Hookups	13	WELDER,500-800 AMP DIESEL MULTI PURPOSE	E	0	0	0	0	0	95	95	95	95	95	0	0
Hookups	13	CRANE,55-60 TON,HYDRAULIC,RT	E	0	0	0	0	0	24	24	24	24	24	0	0
Hookups	13	ROAD TRACTOR,4X6	E	0	0	0	0	0	71	71	71	71	71	0	0
Hookups	13	FLATBED,1.5 TON,2X4,CREWCAB	E	0	0	0	0	0	71	71	71	71	71	0	0
Drilling	13	Generator Engine Run Time	E	0	0	0	0	0	625	625	625	625	625	0	0
Drilling	13	Mud Pump Engine Run Time	E	0	0	0	0	0	464	464	464	464	464	0	0
Drilling	13	F250 Pickup	E	0	0	0	0	0	355	355	355	355	355	0	0
Drilling	13	Cement Pump Truck	E	0	0	0	0	0	57	57	57	57	57	0	0
Drilling	13	Cement Bulk Truck	E	0	0	0	0	0	57	57	57	57	57	0	0
Drilling	13	Wireline Truck	E	0	0	0	0	0	57	57	57	57	57	0	0
Drilling	13	Vaccum Truck	E	0	0	0	0	0	228	228	228	228	228	0	0
Hookups	14	BACKHOE/LOADER,1.25-1.50CY	E	0	0	0	0	0	0	0	0	25	25	0	0
Hookups	14	TRUCK,1.5 TON,2X4,W/CRANE	E	0	0	0	0	0	0	0	0	50	50	0	0
Hookups	14	TRUCK,2.5 TON,2X4,A-FRAME	E	0	0	0	0	0	0	0	0	25	25	0	0
Hookups	14	PICKUP,3/4 TON,4X4,CREWCAB	E	0	0	0	0	0	0	0	0	50	50	0	0
Hookups	14	CRANE,2.5 TON,HYDRAULIC,RT	E	0	0	0	0	0	0	0	0	75	75	0	0
Hookups	14	WELDER,500-800 AMP DIESEL MULTI PURPOSE	E	0	0	0	0	0	0	0	0	75	75	0	0
Hookups	14	CRANE,55-60 TON,HYDRAULIC,RT	E	0	0	0	0	0	0	0	0	25	25	0	0
Hookups	14	ROAD TRACTOR,4X6	E	0	0	0	0	0	0	0	0	75	75	0	0
Hookups	14	FLATBED,1.5 TON,2X4,CREWCAB	E	0	0	0	0	0	0	0	0	75	75	0	0
Drilling	14	Generator Engine Run Time	E	0	0	0	0	0	0	0	0	510	510	0	0
Drilling	14	Mud Pump Engine Run Time	E	0	0	0	0	0	0	0	0	378	378	0	0
Drilling	14	F250 Pickup	E	0	0	0	0	0	0	0	0	281	281	0	0
Drilling	14	Cement Pump Truck	E	0	0	0	0	0	0	0	0	45	45	0	0
Drilling	14	Cement Bulk Truck	E	0	0	0	0	0	0	0	0	45	45	0	0
Drilling	14	Wireline Truck	E	0	0	0	0	0	0	0	0	45	45	0	0
Drilling	14	Vaccum Truck	E	0	0	0	0	0	0	0	0	180	180	0	0
Hookups	15	BACKHOE/LOADER,1.25-1.50CY	E	0	0	0	0	0	36	36	36	36	36	0	0
Hookups	15	TRUCK,1.5 TON,2X4,W/CRANE	E	0	0	0	0	0	63	63	63	63	63	0	0
Hookups	15	TRUCK,2.5 TON,2X4,A-FRAME	E	0	0	0	0	0	52	52	52	52	52	0	0
Hookups	15	PICKUP,3/4 TON,4X4,CREWCAB	E	0	0	0	0	0	87	87	87	87	87	0	0
Hookups	15	CRANE,2.5 TON,HYDRAULIC,RT	E	0	0	0	0	0	91	91	91	91	91	0	0
Hookups	15	WELDER,500-800 AMP DIESEL MULTI PURPOSE	E	0	0	0	0	0	107	107	107	107	107	0	0
Hookups	15	CRANE,55-60 TON,HYDRAULIC,RT	E	0	0	0	0	0	28	28	28	28	28	0	0
Hookups	15	ROAD TRACTOR,4X6	E	0	0	0	0	0	83	83	83	83	83	0	0
Hookups	15	FLATBED,1.5 TON,2X4,CREWCAB	E	0	0	0	0	0	83	83	83	83	83	0	0
Drilling	15	Generator Engine Run Time	E	0	0	0	0	0	707	707	707	707	707	0	0
Drilling	15	Mud Pump Engine Run Time	E	0	0	0	0	0	525	525	525	525	525	0	0
Drilling	15	F250 Pickup	E	0	0	0	0	0	400	400	400	400	400	0	0
Drilling	15	Cement Pump Truck	E	0	0	0	0	0	64	64	64	64	64	0	0
Drilling	15	Cement Bulk Truck	E	0	0	0	0	0	64	64	64	64	64	0	0
Drilling	15	Wireline Truck	E	0	0	0	0	0	64	64	64	64	64	0	0
Drilling	15	Vaccum Truck	E	0	0	0	0	0	256	256	256	256	256	0	0
Hookups	16	BACKHOE/LOADER,1.25-1.50CY	E	32	32	32	32	32	32	32	32	32	32	32	0
Hookups	16	TRUCK,1.5 TON,2X4,W/CRANE	E	55	55	55	55	55	55	55	55	55	55	55	0
Hookups	16	TRUCK,2.5 TON,2X4,A-FRAME	E	50	50	50	50	50	50	50	50	50	50	50	0
Hookups	16	PICKUP,3/4 TON,4X4,CREWCAB	E	83	83	83	83	83	83	83	83	83	83	83	0
Hookups	16	CRANE,2.5 TON,HYDRAULIC,RT	E	79	79	79	79	79	79	79	79	79	79	79	0
Hookups	16	WELDER,500-800 AMP DIESEL MULTI PURPOSE	E	97	97	97	97	97	97	97	97	97	97	97	0
Hookups	16	CRANE,55-60 TON,HYDRAULIC,RT	E	23	23	23	23	23	23	23	23	23	23	23	0
Hookups	16	ROAD TRACTOR,4X6	E	70	70	70	70	70	70	70	70	70	70	70	0
Hookups	16	FLATBED,1.5 TON,2X4,CREWCAB	E	70	70	70	70	70	70	70	70	70	70	70	0
Drilling	16	Generator Engine Run Time	E	0	700	700	700	700	700	700	700	700	700	700	0
Drilling	16	Mud Pump Engine Run Time	E	0	520	520	520	520	520	520	520	520	520	520	0
Drilling	16	F250 Pickup	E	0	399	399	399	399	399	399	399	399	399	399	0
Drilling	16	Cement Pump Truck	E	0	64	64	64	64	64	64	64	64	64	64	0
Drilling	16	Cement Bulk Truck	E	0	64	64	64	64	64	64	64	64	64	64	0
Drilling	16	Wireline Truck	E	0	64	64	64	64	64	64	64	64	64	64	0
Drilling	16	Vaccum Truck	E	0	256	256	256	256	256	256	256	256	256	256	0

Hookups	17	BACKHOE/LOADER,1.25-1.50CY	E	0	0	0	0	0	0	0	0	35	35	0	0
Hookups	17	TRUCK,1.5 TON,2X4,W/CRANE	E	0	0	0	0	0	0	0	0	70	70	0	0
Hookups	17	TRUCK,2.5 TON,2X4,A-FRAME	E	0	0	0	0	0	0	0	0	35	35	0	0
Hookups	17	PICKUP,3/4 TON,4X4,CREWCAB	E	0	0	0	0	0	0	0	0	70	70	0	0
Hookups	17	CRANE,2.5 TON,HYDRAULIC,RT	E	0	0	0	0	0	0	0	0	105	105	0	0
Hookups	17	WELDER,500-800 AMP DIESEL MULTI PURPOSE	E	0	0	0	0	0	0	0	0	105	105	0	0
Hookups	17	CRANE,55-60 TON,HYDRAULIC,RT	E	0	0	0	0	0	0	0	0	35	35	0	0
Hookups	17	ROAD TRACTOR,4X6	E	0	0	0	0	0	0	0	0	105	105	0	0
Hookups	17	FLATBED,1.5 TON,2X4,CREWCAB	E	0	0	0	0	0	0	0	0	105	105	0	0
Drilling	17	Generator Engine Run Time	E	0	0	0	0	0	0	0	0	714	714	0	0
Drilling	17	Mud Pump Engine Run Time	E	0	0	0	0	0	0	0	0	529	529	0	0
Drilling	17	F250 Pickup	E	0	0	0	0	0	0	0	0	394	394	0	0
Drilling	17	Cement Pump Truck	E	0	0	0	0	0	0	0	0	63	63	0	0
Drilling	17	Cement Bulk Truck	E	0	0	0	0	0	0	0	0	63	63	0	0
Drilling	17	Wireline Truck	E	0	0	0	0	0	0	0	0	63	63	0	0
Drilling	17	Vaccum Truck	E	0	0	0	0	0	0	0	0	252	252	0	0
Hookups	18	BACKHOE/LOADER,1.25-1.50CY	E	0	0	0	0	0	0	0	0	35	35	0	0
Hookups	18	TRUCK,1.5 TON,2X4,W/CRANE	E	0	0	0	0	0	0	0	0	70	70	0	0
Hookups	18	TRUCK,2.5 TON,2X4,A-FRAME	E	0	0	0	0	0	0	0	0	35	35	0	0
Hookups	18	PICKUP,3/4 TON,4X4,CREWCAB	E	0	0	0	0	0	0	0	0	70	70	0	0
Hookups	18	CRANE,2.5 TON,HYDRAULIC,RT	E	0	0	0	0	0	0	0	0	105	105	0	0
Hookups	18	WELDER,500-800 AMP DIESEL MULTI PURPOSE	E	0	0	0	0	0	0	0	0	105	105	0	0
Hookups	18	CRANE,55-60 TON,HYDRAULIC,RT	E	0	0	0	0	0	0	0	0	35	35	0	0
Hookups	18	ROAD TRACTOR,4X6	E	0	0	0	0	0	0	0	0	105	105	0	0
Hookups	18	FLATBED,1.5 TON,2X4,CREWCAB	E	0	0	0	0	0	0	0	0	105	105	0	0
Drilling	18	Generator Engine Run Time	E	0	0	0	0	0	0	0	0	714	714	0	0
Drilling	18	Mud Pump Engine Run Time	E	0	0	0	0	0	0	0	0	529	529	0	0
Drilling	18	F250 Pickup	E	0	0	0	0	0	0	0	0	394	394	0	0
Drilling	18	Cement Pump Truck	E	0	0	0	0	0	0	0	0	63	63	0	0
Drilling	18	Cement Bulk Truck	E	0	0	0	0	0	0	0	0	63	63	0	0
Drilling	18	Wireline Truck	E	0	0	0	0	0	0	0	0	63	63	0	0
Drilling	18	Vaccum Truck	E	0	0	0	0	0	0	0	0	252	252	0	0
Hookups	19	BACKHOE/LOADER,1.25-1.50CY	E	0	0	0	0	0	0	0	0	35	35	0	0
Hookups	19	TRUCK,1.5 TON,2X4,W/CRANE	E	0	0	0	0	0	0	0	0	70	70	0	0
Hookups	19	TRUCK,2.5 TON,2X4,A-FRAME	E	0	0	0	0	0	0	0	0	35	35	0	0
Hookups	19	PICKUP,3/4 TON,4X4,CREWCAB	E	0	0	0	0	0	0	0	0	70	70	0	0
Hookups	19	CRANE,2.5 TON,HYDRAULIC,RT	E	0	0	0	0	0	0	0	0	105	105	0	0
Hookups	19	WELDER,500-800 AMP DIESEL MULTI PURPOSE	E	0	0	0	0	0	0	0	0	105	105	0	0
Hookups	19	CRANE,55-60 TON,HYDRAULIC,RT	E	0	0	0	0	0	0	0	0	35	35	0	0
Hookups	19	ROAD TRACTOR,4X6	E	0	0	0	0	0	0	0	0	105	105	0	0
Hookups	19	FLATBED,1.5 TON,2X4,CREWCAB	E	0	0	0	0	0	0	0	0	105	105	0	0
Drilling	19	Generator Engine Run Time	E	0	0	0	0	0	0	0	0	714	714	0	0
Drilling	19	Mud Pump Engine Run Time	E	0	0	0	0	0	0	0	0	529	529	0	0
Drilling	19	F250 Pickup	E	0	0	0	0	0	0	0	0	394	394	0	0
Drilling	19	Cement Pump Truck	E	0	0	0	0	0	0	0	0	63	63	0	0
Drilling	19	Cement Bulk Truck	E	0	0	0	0	0	0	0	0	63	63	0	0
Drilling	19	Wireline Truck	E	0	0	0	0	0	0	0	0	63	63	0	0
Drilling	19	Vaccum Truck	E	0	0	0	0	0	0	0	0	252	252	0	0
Hookups	20	BACKHOE/LOADER,1.25-1.50CY	E	0	0	0	0	0	0	0	0	35	35	0	0
Hookups	20	TRUCK,1.5 TON,2X4,W/CRANE	E	0	0	0	0	0	0	0	0	70	70	0	0
Hookups	20	TRUCK,2.5 TON,2X4,A-FRAME	E	0	0	0	0	0	0	0	0	35	35	0	0
Hookups	20	PICKUP,3/4 TON,4X4,CREWCAB	E	0	0	0	0	0	0	0	0	70	70	0	0
Hookups	20	CRANE,2.5 TON,HYDRAULIC,RT	E	0	0	0	0	0	0	0	0	105	105	0	0
Hookups	20	WELDER,500-800 AMP DIESEL MULTI PURPOSE	E	0	0	0	0	0	0	0	0	105	105	0	0
Hookups	20	CRANE,55-60 TON,HYDRAULIC,RT	E	0	0	0	0	0	0	0	0	35	35	0	0
Hookups	20	ROAD TRACTOR,4X6	E	0	0	0	0	0	0	0	0	105	105	0	0
Hookups	20	FLATBED,1.5 TON,2X4,CREWCAB	E	0	0	0	0	0	0	0	0	105	105	0	0
Drilling	20	Generator Engine Run Time	E	0	0	0	0	0	0	0	0	714	714	0	0
Drilling	20	Mud Pump Engine Run Time	E	0	0	0	0	0	0	0	0	529	529	0	0
Drilling	20	F250 Pickup	E	0	0	0	0	0	0	0	0	394	394	0	0
Drilling	20	Cement Pump Truck	E	0	0	0	0	0	0	0	0	63	63	0	0
Drilling	20	Cement Bulk Truck	E	0	0	0	0	0	0	0	0	63	63	0	0
Drilling	20	Wireline Truck	E	0	0	0	0	0	0	0	0	63	63	0	0
Drilling	20	Vaccum Truck	E	0	0	0	0	0	0	0	0	252	252	0	0
Hookups	21	BACKHOE/LOADER,1.25-1.50CY	E	0	0	0	0	0	0	0	0	35	35	0	0
Hookups	21	TRUCK,1.5 TON,2X4,W/CRANE	E	0	0	0	0	0	0	0	0	70	70	0	0
Hookups	21	TRUCK,2.5 TON,2X4,A-FRAME	E	0	0	0	0	0	0	0	0	35	35	0	0
Hookups	21	PICKUP,3/4 TON,4X4,CREWCAB	E	0	0	0	0	0	0	0	0	70	70	0	0
Hookups	21	CRANE,2.5 TON,HYDRAULIC,RT	E	0	0	0	0	0	0	0	0	105	105	0	0
Hookups	21	WELDER,500-800 AMP DIESEL MULTI PURPOSE	E	0	0	0	0	0	0	0	0	105	105	0	0
Hookups	21	CRANE,55-60 TON,HYDRAULIC,RT	E	0	0	0	0	0	0	0	0	35	35	0	0
Hookups	21	ROAD TRACTOR,4X6	E	0	0	0	0	0	0	0	0	105	105	0	0
Hookups	21	FLATBED,1.5 TON,2X4,CREWCAB	E	0	0	0	0	0	0	0	0	105	105	0	0
Drilling	21	Generator Engine Run Time	E	0	0	0	0	0	0	0	0	714	714	0	0
Drilling	21	Mud Pump Engine Run Time	E	0	0	0	0	0	0	0	0	529	529	0	0
Drilling	21	F250 Pickup	E	0	0	0	0	0	0	0	0	394	394	0	0
Drilling	21	Cement Pump Truck	E	0	0	0	0	0	0	0	0	63	63	0	0
Drilling	21	Cement Bulk Truck	E	0	0	0	0	0	0	0	0	63	63	0	0
Drilling	21	Wireline Truck	E	0	0	0	0	0	0	0	0	63	63	0	0
Drilling	21	Vaccum Truck	E	0	0	0	0	0	0	0	0	252	252	0	0
Hookups	22	BACKHOE/LOADER,1.25-1.50CY	E	0	0	0	0	0	0	0	0	35	35	0	0
Hookups	22	TRUCK,1.5 TON,2X4,W/CRANE	E	0	0	0	0	0	0	0	0	70	70	0	0
Hookups	22	TRUCK,2.5 TON,2X4,A-FRAME	E	0	0	0	0	0	0	0	0	35	35	0	0
Hookups	22	PICKUP,3/4 TON,4X4,CREWCAB	E	0	0	0	0	0	0	0	0	70	70	0	0
Hookups	22	CRANE,2.5 TON,HYDRAULIC,RT	E	0	0	0	0	0	0	0	0	105	105	0	0
Hookups	22	WELDER,500-800 AMP DIESEL MULTI PURPOSE	E	0	0	0	0	0	0	0	0	105	105	0	0
Hookups	22	CRANE,55-60 TON,HYDRAULIC,RT	E	0	0	0	0	0	0	0	0	35	35	0	0
Hookups	22	ROAD TRACTOR,4X6	E	0	0	0	0	0	0	0	0	105	105	0	0
Hookups	22	FLATBED,1.5 TON,2X4,CREWCAB	E	0	0	0	0	0	0	0	0	105	105	0	0
Drilling	22	Generator Engine Run Time	E	0	0	0	0	0	0	0	0	714	714	0	0
Drilling	22	Mud Pump Engine Run Time	E	0	0	0	0	0	0	0	0	529	529	0	0
Drilling	22	F250 Pickup	E	0	0	0	0	0	0	0	0	394	394	0	0
Drilling	22	Cement Pump Truck	E	0	0	0	0	0	0	0	0	63	63	0	0
Drilling	22	Cement Bulk Truck	E	0	0	0	0	0	0	0	0	63	63	0	0
Drilling	22	Wireline Truck	E	0	0	0	0	0	0	0	0	63	63	0	0
Drilling	22	Vaccum Truck	E	0	0	0	0	0	0	0	0	252	252	0	0
Hookups	23	BACKHOE/LOADER,1.25-1.50CY	E	0	0	0	0	0	0	0	0	35	35	0	0

Hookups	23	TRUCK,1.5 TON,2X4,W/CRANE	E	0	0	0	0	0	0	0	0	70	70	0	0
Hookups	23	TRUCK,2.5 TON,2X4,A-FRAME	E	0	0	0	0	0	0	0	0	35	35	0	0
Hookups	23	PICKUP,3/4 TON,4X4,CREWCAB	E	0	0	0	0	0	0	0	0	70	70	0	0
Hookups	23	CRANE,2.5 TON,HYDRAULIC,RT	E	0	0	0	0	0	0	0	0	105	105	0	0
Hookups	23	WELDER,500-800 AMP DIESEL MULTI PURPOSE	E	0	0	0	0	0	0	0	0	105	105	0	0
Hookups	23	CRANE,55-60 TON,HYDRAULIC,RT	E	0	0	0	0	0	0	0	0	35	35	0	0
Hookups	23	ROAD TRACTOR,4X6	E	0	0	0	0	0	0	0	0	105	105	0	0
Hookups	23	FLATBED,1.5 TON,2X4,CREWCAB	E	0	0	0	0	0	0	0	0	105	105	0	0
Drilling	23	Generator Engine Run Time	E	0	0	0	0	0	0	0	0	714	714	0	0
Drilling	23	Mud Pump Engine Run Time	E	0	0	0	0	0	0	0	0	529	529	0	0
Drilling	23	F250 Pickup	E	0	0	0	0	0	0	0	0	394	394	0	0
Drilling	23	Cement Pump Truck	E	0	0	0	0	0	0	0	0	63	63	0	0
Drilling	23	Cement Bulk Truck	E	0	0	0	0	0	0	0	0	63	63	0	0
Drilling	23	Wireline Truck	E	0	0	0	0	0	0	0	0	63	63	0	0
Drilling	23	Vaccum Truck	E	0	0	0	0	0	0	0	0	252	252	0	0
Hookups	24	BACKHOE/LOADER,1.25-1.50CY	E	0	0	0	0	0	0	0	0	35	35	0	0
Hookups	24	TRUCK,1.5 TON,2X4,W/CRANE	E	0	0	0	0	0	0	0	0	70	70	0	0
Hookups	24	TRUCK,2.5 TON,2X4,A-FRAME	E	0	0	0	0	0	0	0	0	35	35	0	0
Hookups	24	PICKUP,3/4 TON,4X4,CREWCAB	E	0	0	0	0	0	0	0	0	70	70	0	0
Hookups	24	CRANE,2.5 TON,HYDRAULIC,RT	E	0	0	0	0	0	0	0	0	105	105	0	0
Hookups	24	WELDER,500-800 AMP DIESEL MULTI PURPOSE	E	0	0	0	0	0	0	0	0	105	105	0	0
Hookups	24	CRANE,55-60 TON,HYDRAULIC,RT	E	0	0	0	0	0	0	0	0	35	35	0	0
Hookups	24	ROAD TRACTOR,4X6	E	0	0	0	0	0	0	0	0	105	105	0	0
Hookups	24	FLATBED,1.5 TON,2X4,CREWCAB	E	0	0	0	0	0	0	0	0	105	105	0	0
Drilling	24	Generator Engine Run Time	E	0	0	0	0	0	0	0	0	714	714	0	0
Drilling	24	Mud Pump Engine Run Time	E	0	0	0	0	0	0	0	0	529	529	0	0
Drilling	24	F250 Pickup	E	0	0	0	0	0	0	0	0	394	394	0	0
Drilling	24	Cement Pump Truck	E	0	0	0	0	0	0	0	0	63	63	0	0
Drilling	24	Cement Bulk Truck	E	0	0	0	0	0	0	0	0	63	63	0	0
Drilling	24	Wireline Truck	E	0	0	0	0	0	0	0	0	63	63	0	0
Drilling	24	Vaccum Truck	E	0	0	0	0	0	0	0	0	252	252	0	0
Hookups	25	BACKHOE/LOADER,1.25-1.50CY	E	0	0	0	0	0	0	0	0	35	35	0	0
Hookups	25	TRUCK,1.5 TON,2X4,W/CRANE	E	0	0	0	0	0	0	0	0	70	70	0	0
Hookups	25	TRUCK,2.5 TON,2X4,A-FRAME	E	0	0	0	0	0	0	0	0	35	35	0	0
Hookups	25	PICKUP,3/4 TON,4X4,CREWCAB	E	0	0	0	0	0	0	0	0	70	70	0	0
Hookups	25	CRANE,2.5 TON,HYDRAULIC,RT	E	0	0	0	0	0	0	0	0	105	105	0	0
Hookups	25	WELDER,500-800 AMP DIESEL MULTI PURPOSE	E	0	0	0	0	0	0	0	0	105	105	0	0
Hookups	25	CRANE,55-60 TON,HYDRAULIC,RT	E	0	0	0	0	0	0	0	0	35	35	0	0
Hookups	25	ROAD TRACTOR,4X6	E	0	0	0	0	0	0	0	0	105	105	0	0
Hookups	25	FLATBED,1.5 TON,2X4,CREWCAB	E	0	0	0	0	0	0	0	0	105	105	0	0
Drilling	25	Generator Engine Run Time	E	0	0	0	0	0	0	0	0	714	714	0	0
Drilling	25	Mud Pump Engine Run Time	E	0	0	0	0	0	0	0	0	529	529	0	0
Drilling	25	F250 Pickup	E	0	0	0	0	0	0	0	0	394	394	0	0
Drilling	25	Cement Pump Truck	E	0	0	0	0	0	0	0	0	63	63	0	0
Drilling	25	Cement Bulk Truck	E	0	0	0	0	0	0	0	0	63	63	0	0
Drilling	25	Wireline Truck	E	0	0	0	0	0	0	0	0	63	63	0	0
Drilling	25	Vaccum Truck	E	0	0	0	0	0	0	0	0	252	252	0	0
Hookups	26	BACKHOE/LOADER,1.25-1.50CY	E	0	0	0	0	0	0	0	0	35	35	0	0
Hookups	26	TRUCK,1.5 TON,2X4,W/CRANE	E	0	0	0	0	0	0	0	0	70	70	0	0
Hookups	26	TRUCK,2.5 TON,2X4,A-FRAME	E	0	0	0	0	0	0	0	0	35	35	0	0
Hookups	26	PICKUP,3/4 TON,4X4,CREWCAB	E	0	0	0	0	0	0	0	0	70	70	0	0
Hookups	26	CRANE,2.5 TON,HYDRAULIC,RT	E	0	0	0	0	0	0	0	0	105	105	0	0
Hookups	26	WELDER,500-800 AMP DIESEL MULTI PURPOSE	E	0	0	0	0	0	0	0	0	105	105	0	0
Hookups	26	CRANE,55-60 TON,HYDRAULIC,RT	E	0	0	0	0	0	0	0	0	35	35	0	0
Hookups	26	ROAD TRACTOR,4X6	E	0	0	0	0	0	0	0	0	105	105	0	0
Hookups	26	FLATBED,1.5 TON,2X4,CREWCAB	E	0	0	0	0	0	0	0	0	105	105	0	0
Drilling	26	Generator Engine Run Time	E	0	0	0	0	0	0	0	0	714	714	0	0
Drilling	26	Mud Pump Engine Run Time	E	0	0	0	0	0	0	0	0	529	529	0	0
Drilling	26	F250 Pickup	E	0	0	0	0	0	0	0	0	394	394	0	0
Drilling	26	Cement Pump Truck	E	0	0	0	0	0	0	0	0	63	63	0	0
Drilling	26	Cement Bulk Truck	E	0	0	0	0	0	0	0	0	63	63	0	0
Drilling	26	Wireline Truck	E	0	0	0	0	0	0	0	0	63	63	0	0
Drilling	26	Vaccum Truck	E	0	0	0	0	0	0	0	0	252	252	0	0
Hookups	27	BACKHOE/LOADER,1.25-1.50CY	E	0	0	0	0	0	0	0	0	35	35	0	0
Hookups	27	TRUCK,1.5 TON,2X4,W/CRANE	E	0	0	0	0	0	0	0	0	70	70	0	0
Hookups	27	TRUCK,2.5 TON,2X4,A-FRAME	E	0	0	0	0	0	0	0	0	35	35	0	0
Hookups	27	PICKUP,3/4 TON,4X4,CREWCAB	E	0	0	0	0	0	0	0	0	70	70	0	0
Hookups	27	CRANE,2.5 TON,HYDRAULIC,RT	E	0	0	0	0	0	0	0	0	105	105	0	0
Hookups	27	WELDER,500-800 AMP DIESEL MULTI PURPOSE	E	0	0	0	0	0	0	0	0	105	105	0	0
Hookups	27	CRANE,55-60 TON,HYDRAULIC,RT	E	0	0	0	0	0	0	0	0	35	35	0	0
Hookups	27	ROAD TRACTOR,4X6	E	0	0	0	0	0	0	0	0	105	105	0	0
Hookups	27	FLATBED,1.5 TON,2X4,CREWCAB	E	0	0	0	0	0	0	0	0	105	105	0	0
Drilling	27	Generator Engine Run Time	E	0	0	0	0	0	0	0	0	714	714	0	0
Drilling	27	Mud Pump Engine Run Time	E	0	0	0	0	0	0	0	0	529	529	0	0
Drilling	27	F250 Pickup	E	0	0	0	0	0	0	0	0	394	394	0	0
Drilling	27	Cement Pump Truck	E	0	0	0	0	0	0	0	0	63	63	0	0
Drilling	27	Cement Bulk Truck	E	0	0	0	0	0	0	0	0	63	63	0	0
Drilling	27	Wireline Truck	E	0	0	0	0	0	0	0	0	63	63	0	0
Drilling	27	Vaccum Truck	E	0	0	0	0	0	0	0	0	252	252	0	0
Hookups	28	BACKHOE/LOADER,1.25-1.50CY	E	0	0	0	0	0	0	0	0	35	35	0	0
Hookups	28	TRUCK,1.5 TON,2X4,W/CRANE	E	0	0	0	0	0	0	0	0	70	70	0	0
Hookups	28	TRUCK,2.5 TON,2X4,A-FRAME	E	0	0	0	0	0	0	0	0	35	35	0	0
Hookups	28	PICKUP,3/4 TON,4X4,CREWCAB	E	0	0	0	0	0	0	0	0	70	70	0	0
Hookups	28	CRANE,2.5 TON,HYDRAULIC,RT	E	0	0	0	0	0	0	0	0	105	105	0	0
Hookups	28	WELDER,500-800 AMP DIESEL MULTI PURPOSE	E	0	0	0	0	0	0	0	0	105	105	0	0
Hookups	28	CRANE,55-60 TON,HYDRAULIC,RT	E	0	0	0	0	0	0	0	0	35	35	0	0
Hookups	28	ROAD TRACTOR,4X6	E	0	0	0	0	0	0	0	0	105	105	0	0
Hookups	28	FLATBED,1.5 TON,2X4,CREWCAB	E	0	0	0	0	0	0	0	0	105	105	0	0
Drilling	28	Generator Engine Run Time	E	0	0	0	0	0	0	0	0	714	714	0	0
Drilling	28	Mud Pump Engine Run Time	E	0	0	0	0	0	0	0	0	529	529	0	0
Drilling	28	F250 Pickup	E	0	0	0	0	0	0	0	0	394	394	0	0
Drilling	28	Cement Pump Truck	E	0	0	0	0	0	0	0	0	63	63	0	0
Drilling	28	Cement Bulk Truck	E	0	0	0	0	0	0	0	0	63	63	0	0
Drilling	28	Wireline Truck	E	0	0	0	0	0	0	0	0	63	63	0	0
Drilling	28	Vaccum Truck	E	0	0	0	0	0	0	0	0	252	252	0	0
Hookups	29	BACKHOE/LOADER,1.25-1.50CY	E	0	0	0	0	0	0	0	0	35	35	0	0
Hookups	29	TRUCK,1.5 TON,2X4,W/CRANE	E	0	0	0	0	0	0	0	0	70	70	0	0

Hookups	29	TRUCK,2.5 TON,2X4,A-FRAME	E	0	0	0	0	0	0	0	0	35	35	0	0
Hookups	29	PICKUP,3/4 TON,4X4,CREWCAB	E	0	0	0	0	0	0	0	0	70	70	0	0
Hookups	29	CRANE,2.5 TON,HYDRAULIC,RT	E	0	0	0	0	0	0	0	0	105	105	0	0
Hookups	29	WELDER,500-800 AMP DIESEL MULTI PURPOSE	E	0	0	0	0	0	0	0	0	105	105	0	0
Hookups	29	CRANE,55-60 TON,HYDRAULIC,RT	E	0	0	0	0	0	0	0	0	35	35	0	0
Hookups	29	ROAD TRACTOR,4X6	E	0	0	0	0	0	0	0	0	105	105	0	0
Hookups	29	FLATBED,1.5 TON,2X4,CREWCAB	E	0	0	0	0	0	0	0	0	105	105	0	0
Drilling	29	Generator Engine Run Time	E	0	0	0	0	0	0	0	0	714	714	0	0
Drilling	29	Mud Pump Engine Run Time	E	0	0	0	0	0	0	0	0	529	529	0	0
Drilling	29	F250 Pickup	E	0	0	0	0	0	0	0	0	394	394	0	0
Drilling	29	Cement Pump Truck	E	0	0	0	0	0	0	0	0	63	63	0	0
Drilling	29	Cement Bulk Truck	E	0	0	0	0	0	0	0	0	63	63	0	0
Drilling	29	Wireline Truck	E	0	0	0	0	0	0	0	0	63	63	0	0
Drilling	29	Vaccum Truck	E	0	0	0	0	0	0	0	0	252	252	0	0
Hookups	30	BACKHOE/LOADER,1.25-1.50CY	E	0	0	0	0	0	0	0	0	35	35	0	0
Hookups	30	TRUCK,1.5 TON,2X4,W/CRANE	E	0	0	0	0	0	0	0	0	70	70	0	0
Hookups	30	TRUCK,2.5 TON,2X4,A-FRAME	E	0	0	0	0	0	0	0	0	35	35	0	0
Hookups	30	PICKUP,3/4 TON,4X4,CREWCAB	E	0	0	0	0	0	0	0	0	70	70	0	0
Hookups	30	CRANE,2.5 TON,HYDRAULIC,RT	E	0	0	0	0	0	0	0	0	105	105	0	0
Hookups	30	WELDER,500-800 AMP DIESEL MULTI PURPOSE	E	0	0	0	0	0	0	0	0	105	105	0	0
Hookups	30	CRANE,55-60 TON,HYDRAULIC,RT	E	0	0	0	0	0	0	0	0	35	35	0	0
Hookups	30	ROAD TRACTOR,4X6	E	0	0	0	0	0	0	0	0	105	105	0	0
Hookups	30	FLATBED,1.5 TON,2X4,CREWCAB	E	0	0	0	0	0	0	0	0	105	105	0	0
Drilling	30	Generator Engine Run Time	E	0	0	0	0	0	0	0	0	714	714	0	0
Drilling	30	Mud Pump Engine Run Time	E	0	0	0	0	0	0	0	0	529	529	0	0
Drilling	30	F250 Pickup	E	0	0	0	0	0	0	0	0	394	394	0	0
Drilling	30	Cement Pump Truck	E	0	0	0	0	0	0	0	0	63	63	0	0
Drilling	30	Cement Bulk Truck	E	0	0	0	0	0	0	0	0	63	63	0	0
Drilling	30	Wireline Truck	E	0	0	0	0	0	0	0	0	63	63	0	0
Drilling	30	Vaccum Truck	E	0	0	0	0	0	0	0	0	252	252	0	0

Construction Equipment Horsepower Used

Equipment	HP	Equipment	HP
ASPHALT MILL ATTACHMENT,2-4'	81	GENERATOR,6-10KW,DIESEL	18
BACKHOE/LOADER,.75-1CY	67	GENERATOR,6-10KW,DIESEL	18
BACKHOE/LOADER,1.25-1.50CY	100	GOLF CART	50
BACKHOE/LOADER,1.50-2.0CY	100	HAMMER LEADS	205
BACKHOE/LOADER,1-1.25CY	92	HOLEPUNCH 7/16-13/16",HYDRAULIC	x
BACKHOE/LOADER,1-1.25CY	92	LOADER,SKIDSTEER 36-45HP	45
BOOMTRUCK,10-13 TON	226	LOADER,SKIDSTEER 36-45HP	45
BOOMTRUCK,23-28 TON	226	MANLIFT,40' RT,GAS OR DSL	60
BOOMTRUCK,23-28 TON	226	MANLIFT,40' RT,GAS OR DSL	60
BORING SYSTEM,30-36",AUGER,DIESEL	68	MANLIFT,40-50',ELECTRIC	x
BORING SYSTEM,30-36",AUGER,DIESEL	68	MANLIFT,60' RT,GAS OR DSL	60
BORING SYSTEM,PILOT TUBE,AUGER,HYDRAULIC	68	MECHANIC'S TRUCK,1 TON,2X4	130
BREAKER ATTACHMENT,4-5K#,HYDRAULIC	x	MECHANIC'S TRUCK,1.5 TON,2X4	130
Cat 14 Grader	259	MECHANIC'S TRUCK,2.5 TON,4X6	210
Cat 14 Grader	259	MORTAR MIXER,6-9 CU FT	7
Cat 623 Water Wagon	407	MOTOR GRADER,130-150 HP	150
Cat 623 Water Wagon	407	PEOPLE MOVER,16-30 PASS	305
Cat 815 Compactor	232	PICKUP,1/2 TON,2X4	130
Cat 815 Compactor	232	PICKUP,1/2 TON,2X4,CREWCAB	130
Cat 875 Challenger	585	PICKUP,1/2 TON,4X4	130
Cat 875 Challenger	585	PICKUP,3/4 TON,4X4,CREWCAB	180
Cat D6	207	PICKUP,3/4 TON,4X4,CREWCAB	180
Cat D6	207	POWER TROWEL,36"-48",GAS	20
COMPACTOR WHEEL ATTACHMENT,12-48"	x	REBAR BENDER,#2-#8 BAR ELEC	x
COMPACTOR,24-33" ROLLER,WALKBEHIND	8	REBAR BENDER,#2-#8 BAR ELEC	x
COMPACTOR,24-33" ROLLER,WALKBEHIND	8	ROAD TRACTOR,4X6	475
COMPACTOR,40-66" ROLLER,RIDE ON	33	SCISSOR LIFT,<20'	24
COMPACTOR,ROLLER,24-33"	14	SIDEBOOM,14OK#,300HP (583)	300
COMPRESSOR,100-200 CFM,DIESEL	50	SIDEBOOM,90K#,200HP (572)	200
COMPRESSOR,100-200 CFM,DIESEL	50	SUV,6-9 PASSENGER 4X4	273
COMPRESSOR,300-400 CFM,DIESEL	110	SWEEPER,6-8',RIDING	45
COMPRESSOR,800-1000 CFM,DIESEL	275	TAMPER,100-150#	3
CONCRETE SAW,5-7" WET CUT	35	TRAILER,CABLE PULLER,20-30K PULL	x
CONCRETE VIBRATOR,HEAVY DUTY	6	TRAILER,POLE	x
CONCRETE VIBRATOR,HEAVY DUTY	6	TRENCHER,3-5'	80
CRANE,10-14 TON,HYDRAULIC,RT	62	TRENCHER,3-5'	80
CRANE,15-19 TON,HYDRAULIC,RT	110	TROWEL,36-48",WALK BEHIND	8
CRANE,40-50 TON,LAT BOOM, MECH,CRAWLER	150	TRUCK,1.5 TON,2X4,W/CRANE	210
CRANE,55-60 TON,HYDRAULIC,RT	240	TRUCK,2 TON,2X4,BUCKET	210
CRANE,70-79 TON,HYDRAULIC,RT	250	TRUCK,2 TON,2X4,DIGGER	210
DUMPTRUCK,10-12CY,4X6	214	TRUCK,3/4 TON,2X4,ELECT. MAINT	x
EXCAVATOR, 10-14K#,MINI	42	UTILITY TRUCK,1 TON Cable Tensioner	180
EXCAVATOR,50-60K#	176	UTILITY TRUCK,1 TON,4X4,CREWCAB	180
FLATBED,1 TON,2X4,CREWCAB	180	UTILITY TRUCK,3/4 TON,2X4	130
FLATBED,1.5 TON,2X4	210	WATER TRUCK,4-5K GALLON,4X6	175
FLATBED,20-28',4X6	300	WELDER,150-200 AMP, GASOLINE	11
FORKLIFT,6K# RT,TELE BOOM	73	WELDER,250-300 AMP DIESEL	18
FORKLIFT,7-9K#,YARD	73	WELDER,250-300 AMP INVERTER	18
FORKLIFT,7-9K#,YARD	73	WELDER,400-500 AMP DIESEL	48
FORKLIFT,8-9K# RT TELE BOOM	73	WELDER,500-800 AMP DIESEL MULTI PURPOSE	42
FUEL/LUBE TRUCK,2 TON,2X4	210	WHEEL LOADER,2.5-3.0CY	125
FUEL/LUBE TRUCK,4 TON,4X6	260	WHEEL LOADER,3.0-3.5CY	160
GENERATOR,5-7KW,GASOLINE	11	WHEEL LOADER,3.5-4.0CY	200

Construction Emissions

- Construction Equipment Emission
- Construction Vehicle Travel Emission
- Construction Fugitive Dust Emission
- Construction Off-Site Emission

AERA - Santa Barbara County - Cat Canyon - ECC Project

Construction Equipment Emission Calculations
Unmitigated
On-Site

Year	Emissions (tons/year)						Emissions (MT/year)			
	ROC	CO	NOx	SOx	PM10	PM2.5	N2O	CH4	CO2	CO2e
-3	1.88	9.49	23.72	0.02	0.95	0.88	0.00	0.66	2,178.70	2,192.61
-2	3.81	20.55	37.21	0.04	1.71	1.59	0.00	1.19	3,983.26	4,008.33
-1	5.42	31.73	49.19	0.06	2.39	2.23	0.00	1.55	5,283.88	5,316.49
1	0.75	4.24	8.11	0.01	0.34	0.32	0.00	0.28	882.23	888.04
2	0.66	4.03	7.05	0.01	0.30	0.28	0.00	0.26	832.01	837.47
3	0.28	1.60	3.09	0.01	0.12	0.11	0.00	0.14	444.56	447.58
4	1.11	8.38	9.41	0.02	0.42	0.39	0.00	0.45	1,525.85	1,535.22
5	3.41	24.77	31.54	0.06	1.31	1.22	0.00	1.66	5,425.95	5,460.75
6	0.01	0.06	0.10	0.00	0.00	0.00	0.00	0.01	16.43	16.54
7	0.26	2.04	2.36	0.01	0.10	0.09	0.00	0.14	453.43	456.36
8	0.00	0.00	0.00	0.00	0.00	0.00	0.00	0.00	0.00	0.00
9	0.22	1.48	2.13	0.00	0.09	0.08	0.00	0.14	436.18	439.14
10	0.11	0.78	1.01	0.00	0.04	0.04	0.00	0.05	169.54	170.60
11	0.27	2.13	1.07	0.01	0.03	0.03	0.00	0.02	592.29	592.73
12	0.36	2.55	1.42	0.01	0.05	0.05	0.00	0.03	788.24	788.84
13	0.11	0.97	0.45	0.00	0.01	0.01	0.00	0.01	226.96	227.13
14	0.00	0.02	0.01	0.00	0.00	0.00	0.00	0.00	9.68	9.69
15	0.23	1.49	0.93	0.01	0.03	0.03	0.00	0.02	496.44	496.83
16	0.71	5.78	2.22	0.02	0.07	0.07	0.00	0.06	1,756.87	1,758.05
17	0.00	0.02	0.01	0.00	0.00	0.00	0.00	0.00	9.68	9.69
18	0.00	0.02	0.01	0.00	0.00	0.00	0.00	0.00	9.68	9.69

1. Emissions calculated using the CalEEMod v2013.2.2 Program
2. Equipment size and use based on Applicant submittal
3. Days per month based on 6 working days per week.
4. Hours per day based on 10 working hours per day.
5. Truck emissions are included in the offsite calculations because they are certified for on-road use.

Unmitigated
14-Mile Fuel Line

Year	Emissions (tons/year)						Emissions (MT/year)			
	ROC	CO	NOx	SOx	PM10	PM2.5	N2O	CH4	CO2	CO2e
-2	3.45	24.04	36.55	0.04	1.81	1.68	0.00	1.11	3,866.13	3,899.43

Unmitigated
115KV Interconnect & Substation

Year	Emissions (tons/year)						Emissions (MT/year)			
	ROC	CO	NOx	SOx	PM10	PM2.5	N2O	CH4	CO2	CO2e
-3	0.13	0.72	1.09	0.001	0.06	0.06	0.00	0.03	95.04	95.59

AERA - Santa Barbara County - Cat Canyon - ECC Project

Construction Equipment Emission Calculations
Mitigated - Tier 4 Engines

	Emissions (tons/year)						Emissions (MT/year)			
Year	ROC	CO	NOx	SOx	PM10	PM2.5	N2O	CH4	CO2	CO2e
-3	0.29	11.44	1.23	0.02	0.04	0.04	0.00	0.66	2,178.70	2,192.61
-2	0.60	22.61	5.60	0.04	0.07	0.07	0.00	1.19	3,983.26	4,008.32
-1	0.83	33.80	8.92	0.06	0.09	0.09	0.00	1.55	5,283.87	5,316.48
1	0.13	5.30	0.81	0.01	0.02	0.02	0.00	0.28	882.23	888.04
2	0.12	5.11	0.80	0.01	0.02	0.02	0.00	0.26	832.01	837.47
3	0.06	2.42	0.27	0.01	0.01	0.01	0.00	0.14	444.56	447.57
4	0.24	9.59	2.55	0.02	0.03	0.03	0.00	0.45	1,525.85	1,535.22
5	0.81	32.48	6.33	0.06	0.10	0.10	0.00	1.66	5,425.94	5,460.74
6	0.00	0.08	0.01	0.00	0.00	0.00	0.00	0.01	16.43	16.54
7	0.07	2.79	0.45	0.01	0.01	0.01	0.00	0.14	453.43	456.36
8	0.00	0.00	0.00	0.00	0.00	0.00	0.00	0.00	0.00	0.00
9	0.06	2.38	0.26	0.00	0.01	0.01	0.00	0.14	436.18	439.14
10	0.03	1.02	0.20	0.00	0.00	0.00	0.00	0.05	169.54	170.60
11	0.07	3.08	0.51	0.01	0.01	0.01	0.00	0.02	592.28	592.73
12	0.10	3.91	0.59	0.01	0.01	0.01	0.00	0.03	788.24	788.84
13	0.03	1.28	0.25	0.00	0.00	0.00	0.00	0.01	226.96	227.13
14	0.00	0.04	0.00	0.00	0.00	0.00	0.00	0.00	9.68	9.69
15	0.06	2.37	0.37	0.01	0.01	0.01	0.00	0.02	496.44	496.82
16	0.21	8.83	1.32	0.02	0.03	0.03	0.00	0.06	1,756.86	1,758.05
17	0.00	0.04	0.00	0.00	0.00	0.00	0.00	0.00	9.68	9.69
18	0.00	0.04	0.00	0.00	0.00	0.00	0.00	0.00	9.68	9.69

1. Emissions calculated using the CalEEMod v2013.2.2 Program
2. Equipment size and use based on Applicant submittal
3. Days per month based on 6 working days per week.
4. Hours per day based on 10 working hours per day.
5. Truck emissions are included in the offsite calculations because they are certified for on-road use.
6. Tier 4 construction equipment was used to mitigate the construction emissions.

Mitigated - Tier 4 Engines
14-Mile Fuel Line

	Emissions (tons/year)						Emissions (MT/year)			
Year	ROC	CO	NOx	SOx	PM10	PM2.5	N2O	CH4	CO2	CO2e
-2	0.52	24.49	2.78	0.04	0.07	0.07	0.00	1.11	3,866.12	3,889.43

Mitigated - Tier 4 Engines
115KV Interconnect & Substation

	Emissions (tons/year)						Emissions (MT/year)			
Year	ROC	CO	NOx	SOx	PM10	PM2.5	N2O	CH4	CO2	CO2e
-3	0.014	0.619	0.171	0.0011	0.0015	0.0015	0.00	0.03	95.04	92.59

AERA - Santa Barbara County - Cat Canyon - ECC Project

Construction Vehicle Travel Emission Calculations
Unmitigated
On-site Construction Activities

								Emission Factor (g/mile)									Emissions (tons/year)						Emissions (MT/year)			
Year	Activity/Source	Vehicle	EMFAC Vehicle Type	Fuel-Speed	From	Annual R.T.	Miles per R.T.	ROC	CO	NOx	SOx	PM10	PM2.5	N2O	CH4	CO2	ROC	CO	NOx	SOx	PM10	PM2.5	N2O	CH4	CO2	CO2e
-3	Equipment/Materials Delivery	Truck	T7 Tractor Con.	D-55	SM	211	32.4	0.151193	0.637357	6.741905	0.00	0.100488	0.096141	0.0048	0.0051	1528.636	0.0011	0.0048	0.0508	0.0000	0.0008	0.0007	0.0000	0.0000	10.45	10.46
-3	Employees	Auto	LDA	G-55	SM	4,745	32.4	0.020694	0.860683	0.104406	0.00	0.001357	0.001249	0.0647	0.0704	261.8851	0.0035	0.1459	0.0177	0.0000	0.0002	0.0002	0.0099	0.0108	40.26	43.57
-2	Equipment/Materials Delivery	Truck	T7 Tractor Con.	D-55	SM	1,037	32.4	0.091222	0.373399	5.602221	0.00	0.049222	0.047093	0.0048	0.0051	1511.422	0.0034	0.0138	0.2075	0.0000	0.0018	0.0017	0.0002	0.0002	50.78	50.84
-2	Equipment/Materials Delivery	Truck	T7 Tractor Con.	D-55	BAK	45	276	0.091222	0.373399	5.602221	0.00	0.049222	0.047093	0.0048	0.0051	1511.422	0.0012	0.0051	0.0767	0.0000	0.0007	0.0006	0.0001	0.0001	18.77	18.79
-2	Equipment/Materials Delivery	Truck	T7 Tractor Con.	D-55	OS	6	808	0.091222	0.373399	5.602221	0.00	0.049222	0.047093	0.0048	0.0051	1511.422	0.0005	0.0020	0.0299	0.0000	0.0003	0.0003	0.0000	0.0000	7.33	7.34
-2	Equipment/Materials Delivery	Truck	T7 Tractor Con.	D-55	50/50	123	154.2	0.091222	0.373399	5.602221	0.00	0.049222	0.047093	0.0048	0.0051	1511.422	0.0019	0.0078	0.1171	0.0000	0.0010	0.0010	0.0001	0.0001	28.67	28.70
-2	Employees	Auto	LDA	G-55	SM	41,989	32.4	0.016715	0.751187	0.090739	0.00	0.001341	0.001234	0.0647	0.0704	254.8155	0.0251	1.1265	0.1361	0.0000	0.0020	0.0019	0.0880	0.0958	346.66	375.96
-1	Equipment/Materials Delivery	Truck	T7 Tractor Con.	D-55	SM	445	32.4	0.082782	0.342965	5.067052	0.00	0.04262	0.040776	0.0048	0.0051	1497.538	0.0013	0.0055	0.0805	0.0000	0.0007	0.0006	0.0001	0.0001	21.59	21.61
-1	Equipment/Materials Delivery	Truck	T7 Tractor Con.	D-55	BAK	106	276	0.082782	0.342965	5.067052	0.00	0.04262	0.040776	0.0048	0.0051	1497.538	0.0027	0.0111	0.1634	0.0000	0.0014	0.0013	0.0001	0.0001	43.81	43.86
-1	Equipment/Materials Delivery	Truck	T7 Tractor Con.	D-55	OS	6	808	0.082782	0.342965	5.067052	0.00	0.04262	0.040776	0.0048	0.0051	1497.538	0.0004	0.0018	0.0271	0.0000	0.0002	0.0002	0.0000	0.0000	7.26	7.27
-1	Equipment/Materials Delivery	Truck	T7 Tractor Con.	D-55	50/50	180	154.2	0.082782	0.342965	5.067052	0.00	0.04262	0.040776	0.0048	0.0051	1497.538	0.0025	0.0105	0.1550	0.0000	0.0013	0.0012	0.0001	0.0001	41.57	41.61
-1	Employees	Auto	LDA	G-55	SM	70,561	32.4	0.019293	0.199246	0.175843	0.00	0.013227	0.012655	0.0647	0.0704	251.7188	0.0486	0.5021	0.4431	0.0000	0.0333	0.0319	0.1479	0.1609	575.47	624.71
1	Equipment/Materials Delivery	Truck	T7 Tractor Con.	D-55	50/50	8	154.2	0.062672	0.267293	4.268094	0.00	0.028011	0.026799	0.0048	0.0051	1483.078	0.0001	0.0004	0.0058	0.0000	0.0000	0.0000	0.0000	0.0000	1.83	1.83
1	Employees	Auto	LDA	G-55	SM	5,054	32.4	0.012154	0.607815	0.071279	0.00	0.001335	0.001228	0.0647	0.0704	240.612	0.0022	0.1097	0.0129	0.0000	0.0002	0.0002	0.0106	0.0115	39.40	42.93
2	Equipment/Materials Delivery	Truck	T7 Tractor Con.	D-55	50/50	8	154.2	0.057764	0.25314	3.677975	0.00	0.024166	0.02312	0.0048	0.0051	1467.587	0.0001	0.0003	0.0050	0.0000	0.0000	0.0000	0.0000	0.0000	1.81	1.81
2	Employees	Auto	LDA	G-55	SM	4,828	32.4	0.010841	0.562104	0.064352	0.00	0.001318	0.001212	0.0647	0.0704	233.5884	0.0019	0.0969	0.0111	0.0000	0.0002	0.0002	0.0101	0.0110	36.54	39.91
3	Equipment/Materials Delivery	Truck	T7 Tractor Con.	D-55	50/50	5	154.2	0.052711	0.235751	3.090283	0.00	0.019384	0.018546	0.0048	0.0051	1449.996	0.0000	0.0002	0.0026	0.0000	0.0000	0.0000	0.0000	0.0000	1.12	1.12
3	Employees	Auto	LDA	G-55	SM	1,732	32.4	0.009749	0.52468	0.058567	0.00	0.001305	0.0012	0.0647	0.0704	226.7004	0.0006	0.0325	0.0036	0.0000	0.0001	0.0001	0.0036	0.0040	12.72	13.93
4	Equipment/Materials Delivery	Truck	T7 Tractor Con.	D-55	SM	373	32.4	0.031069	0.182112	0.848479	0.00	0.005697	0.005451	0.0048	0.0051	1406.097	0.0004	0.0024	0.0113	0.0000	0.0001	0.0001	0.0001	0.0001	16.99	17.01
4	Equipment/Materials Delivery	Truck	T7 Tractor Con.	D-55	BAK	37	276	0.031069	0.182112	0.848479	0.00	0.005697	0.005451	0.0048	0.0051	1406.097	0.0003	0.0021	0.0096	0.0000	0.0001	0.0001	0.0000	0.0001	14.36	14.38
4	Equipment/Materials Delivery	Truck	T7 Tractor Con.	D-55	OS	7	808	0.031069	0.182112	0.848479	0.00	0.005697	0.005451	0.0048	0.0051	1406.097	0.0002	0.0011	0.0053	0.0000	0.0000	0.0000	0.0000	0.0000	7.95	7.96
4	Equipment/Materials Delivery	Truck	T7 Tractor Con.	D-55	50/50	53	154.2	0.031069	0.182112	0.848479	0.00	0.005697	0.005451	0.0048	0.0051	1406.097	0.0003	0.0016	0.0076	0.0000	0.0001	0.0000	0.0000	0.0000	11.49	11.50
4	Employees	Auto	LDA	G-55	SM	25,090	32.4	0.008792	0.491256	0.053621	0.00	0.001296	0.001192	0.0647	0.0704	219.9673	0.0079	0.4402	0.0480	0.0000	0.0012	0.0011	0.0526	0.0572	178.82	196.32
5	Equipment/Materials Delivery	Truck	T7 Tractor Con.	D-55	SM	403	32.4	0.031163	0.182958	0.80919	0.00	0.005637	0.005393	0.0048	0.0051	1399.408	0.0004	0.0026	0.0116	0.0000	0.0001	0.0001	0.0001	0.0001	18.27	18.29
5	Equipment/Materials Delivery	Truck	T7 Tractor Con.	D-55	BAK	93	276	0.031163	0.182958	0.80919	0.00	0.005637	0.005393	0.0048	0.0051	1399.408	0.0009	0.0052	0.0229	0.0000	0.0002	0.0002	0.0001	0.0001	35.92	35.96
5	Equipment/Materials Delivery	Truck	T7 Tractor Con.	D-55	OS	7	808	0.031163	0.182958	0.80919	0.00	0.005637	0.005393	0.0048	0.0051	1399.408	0.0002	0.0011	0.0050	0.0000	0.0000	0.0000	0.0000	0.0000	7.92	7.92
5	Equipment/Materials Delivery	Truck	T7 Tractor Con.	D-55	50/50	73	154.2	0.031163	0.182958	0.80919	0.00	0.005637	0.005393	0.0048	0.0051	1399.408	0.0004	0.0023	0.0100	0.0000	0.0001	0.0001	0.0001	0.0001	15.75	15.77
5	Employees	Auto	LDA	G-55	SM	35,554	32.4	0.007953	0.460768	0.049335	0.00	0.001291	0.001187	0.0647	0.0704	213.3629	0.0101	0.5851	0.0626	0.0000	0.0016	0.0015	0.0745	0.0811	245.78	270.59
6	Equipment/Materials Delivery	Truck	T7 Tractor Con.	D-55	50/50	2	154.2	0.031098	0.182794	0.765484	0.00	0.005564	0.005323	0.0048	0.0051	1392.862	0.0000	0.0001	0.0003	0.0000	0.0000	0.0000	0.0000	0.0000	0.43	0.43
6	Employees	Auto	LDA	G-55	SM	312	32.4	0.00731	0.434941	0.045875	0.00	0.001292	0.001188	0.0647	0.0704	206.8211	0.0001	0.0048	0.0005	0.0000	0.0000	0.0000	0.0007	0.0007	2.09	2.31
7	Equipment/Materials Delivery	Truck	T7 Tractor Con.	D-55	50/50	1	154.2	0.030977	0.182252	0.723789	0.00	0.005494	0.005256	0.0048	0.0051	1386.476	0.0000	0.0000	0.0001	0.0000	0.0000	0.0000	0.0000	0.0000	0.21	0.21
7	Employees	Auto	LDA	G-55	SM	1,632	32.4	0.006762	0.413027	0.042909	0.00	0.001273	0.00117	0.0647	0.0704	200.9665	0.0004	0.0241	0.0025	0.0000	0.0001	0.0001	0.0034	0.0037	10.63	11.77
9	Equipment/Materials Delivery	Truck	T7 Tractor Con.	D-55	50/50	2	154.2	0.030512	0.179741	0.63938	0.00	0.005336	0.005105	0.0048	0.0051	1373.305	0.0000	0.0001	0.0002	0.0000	0.0000	0.0000	0.0000	0.0000	0.42	0.42
9	Employees	Auto	LDA	G-55	SM	1,563	32.4	0.0058	0.374918	0.037794	0.00	0.001154	0.001061	0.0647	0.0704	191.0012	0.0003	0.0209	0.0021	0.0000	0.0001	0.0001	0.0033	0.0036	9.67	10.76
10	Equipment/Materials Delivery	Truck	T7 Tractor Con.	D-55	50/50	2	154.2	0.030298	0.178563	0.602128	0.00	0.005271	0.005043	0.0048	0.0051	1367.262	0.0000	0.0001	0.0002	0.0000	0.0000	0.0000	0.0000	0.0000	0.42	0.42
10	Employees	Auto	LDA	G-55	SM	886	32.4	0.005374	0.357737	0.035538	0.00	0.001084	0.000997	0.0647	0.0704	186.8172	0.0002	0.0113	0.0011	0.0000	0.0000	0.0000	0.0019	0.0020	5.36	5.98
11	Equipment/Materials Delivery	Truck	T7 Tractor Con.	D-55	50/50	2	154.2	0.030099	0.177459	0.568774	0.00	0.005213	0.004987	0.0048	0.0051	1361.643	0.0000	0.0001	0.0002	0.0000	0.0000	0.0000	0.0000	0.0000	0.42	0.42
11	Employees	Auto	LDA	G-55	SM	2,614	32.4	0.005005	0.342518	0.033517	0.00	0.00102	0.000938	0.0647	0.0704	183.1037	0.0005	0.0320	0.0031	0.0000	0.0001	0.0001	0.0055	0.0060	15.51	17.33
12	Equipment/Materials Delivery	Truck	T7 Tractor Con.	D-55	50/50	2	154.2	0.029932	0.176529	0.539591	0.00	0.005165	0.004942	0.0048	0.0051	1356.632	0.0000	0.0001	0.0002	0.0000	0.0000	0.0000	0.0000	0.0000	0.42	0.42
12	Employees	Auto	LDA	G-55	SM	2,967	32.4	0.004669	0.328383	0.031679	0.00	0.000959	0.000882	0.0647	0.0704	179.8219	0.0005	0.0348	0.0034	0.0000	0.0001	0.0001	0.0062	0.0068	17.29	19.36
13	Equipment/Materials Delivery	Truck	T7 Tractor Con.	D-55	50/50	1	154.2	0.029779	0.175667	0.513208	0.00	0.005125	0.004903	0.0048	0.0051	1352.045	0.0000	0.0000	0.0001	0.0000	0.0000	0.0000	0.0000	0.0000	0.21	0.21
13	Employees	Auto	LDA	G-55	SM	801	32.4	0.004364	0.315243	0.030018	0.00	0.000903	0.00083	0.0647	0.0704	176.9316	0.0001	0.0090	0.0009	0.0000	0.0000	0.0000	0.0017	0.0018	4.59	5.15
14	Employees	Auto	LDA	G-55	SM	156	32.4	0.004092	0.303202	0.028556	0.00	0.00085	0.000781	0.0647	0.0704	174.4064	0.0000	0.0017	0.0002	0.0000	0.0000	0.0000	0.0003	0.0004	0.88	0.99
15	Employees	Auto	LDA	G-55	SM	1,002	32.4	0.003836	0.291645	0.027269	0.00	0.0008	0.000735	0.0647	0.0704	172.2119	0.0001	0.0104	0.0010	0.0000	0.0000	0.0000	0.0021	0.0023	5.59	6.29
16	Equipment/Materials Delivery	Truck	T7 Tractor Con.	D-55	50/50	5	154.2	0.029394	0.173486	0.450586	0.00	0.005032	0.004814	0.0048	0.0051	1341.015	0.0000	0.0001	0.0004	0.0000	0.0000	0.0000	0.0000	0.0000	1.03	1.04
16	Employees	Auto	LDA	G-55	SM	7,513	32.4	0.003591	0.280518	0.026127	0.00	0.000753	0.000692	0.0647	0.0704	170.3208	0.0010	0.0753	0.0070	0.0000	0.0002	0.0002	0.0157	0.0171	41.46	46.70
17	Employees	Auto	LDA	G-55	SM	156	32.4	0.003376	0.270557	0.025141	0.00	0.000712	0.000654	0.0647	0.0704	168.7141	0.0000	0.0015	0.0001	0.0000	0.0000	0.0000	0.0003	0.0004	0.85	0.96
18	Employees	Auto	LDA	G-55	SM	156	32.4	0.003205	0.262174	0.024348	0.00	0.000675	0.00062	0.0647	0.0704	167.3719	0.0000	0.0015	0.0001	0.0000	0.0000	0.0000	0.0003	0.0004	0.85	0.95

14-Mile Fuel Line Construction Activities

								Emission Factor (g/mile)									Emissions (tons/year)						Emissions (MT/year)			
Year	Activity/Source	Vehicle	miles/year	Fuel-Speed	From	Annual R.T.	Miles per R.T.	ROC	CO	NOx	SOx	PM10	PM2.5	N2O	CH4	CO2	ROC	CO	NOx	SOx	PM10	PM2.5	N2O	CH4	CO2	CO2e
-2	Equipment/Materials Delivery	Truck	T7 Tractor Con.	D-55	50/50	67	154.2	0.091222	0.373399	5.602221	0.00	0.049222	0.047093	0.0048	0.0051	1511.422	0.001	0.004	0.064	0.000	0.001	0.001	0.00	0.00	15.62	15.63
-2	Employees	Auto	LDA	G-55	SM	15,058	32.4	0.016715	0.751187	0.090739	0.00	0.001341	0.001234	0.0647	0.0704	254.8155	0.009	0.404	0.049	0.000	0.001	0.001	0.03	0.03	124.32	134.83

115KV Interconnect & Substation Construction Activities

								Emission Factor (g/mile)									Emissions (tons/year)						Emissions (MT/year)			
Year	Activity/Source	Vehicle	miles/year	Fuel-Speed	From	Annual R.T.	Miles per R.T.	ROC	CO	NOx	SOx	PM10	PM2.5	N2O	CH4	CO2	ROC	CO	NOx	SOx	PM10	PM2.5	N2O	CH4	CO2	CO2e
-3	Employees	Auto	LDA	G-55	SM	1,222	32.4	0.020694	0.860683	0.104406	0.00	0.001357	0.001249	0.0647	0.0704	261.8851	0.0009	0.0376	0.0046	0.0000	0.0001	0.0001	0.00	0.00	10.37	11.22

1. SM=Santa Maria, BAK=Bakersfield, OS=Out of State, 50/50=50% from Santa Maria and 50% from Bakersfield, RT=Round Trip
2. Emission factors based on EMFAC2014 for Santa Barbara County with an Aggregate Fleet Model year. Except N2O and CH4 emission factors which were based on CCAR General Reporting Protocal v3.1 Table C.4 assuming worst case.
3. Equipment/Material Deliveries and employees counts and origin of trips based on Applicant subminttal.

Construction Fugitive Dust Emission Calculations
Unmitigated

Cut/Fill [2]

Year	Activity/Source	Fill (cubic yards)	Cut (cubic yards)	Emissions Factor	Tons/Year PM10	Tons/Year PM2.5
-3	Cut/Fill	266,903	521,238	CalEEMod	0.070	0.011
-2	Cut/Fill	310,882	435,779	CalEEMod	0.066	0.010
-1	Cut/Fill	768,987	284,010	CalEEMod	0.093	0.014
1	Cut/Fill	35,804	121,268	CalEEMod	0.014	0.002
5	Cut/Fill	975,163	1,444,936	CalEEMod	0.214	0.033
7	Cut/Fill	13,724	6,276	CalEEMod	0.002	0.0003
10	Cut/Fill	0	42,099	CalEEMod	0.004	0.001
11	Cut/Fill	13,573	25,199	CalEEMod	0.003	0.001
12	Cut/Fill	207,038	78,439	CalEEMod	0.025	0.004
15	Cut/Fill	17,828	11,997	CalEEMod	0.003	0.000
16	Cut/Fill	501,266	177,032	CalEEMod	0.060	0.009

Site Grading [1]

Year	Activity/Source	Area Disturbed		Emissions Factor	Tons/Year PM10	Tons/Year PM2.5
-3	Site Grading	50.53	acres/year	CalEEMod	0.027	0.003
-2	Site Grading	42.41	acres/year	CalEEMod	0.023	0.002
-1	Site Grading	59.80	acres/year	CalEEMod	0.032	0.003
1	Site Grading	10.59	acres/year	CalEEMod	0.006	0.0006
5	Site Grading	81.06	acres/year	CalEEMod	0.043	0.005
7	Site Grading	2.50	acres/year	CalEEMod	0.001	0.0001
10	Site Grading	3.00	acres/year	CalEEMod	0.002	0.0002
11	Site Grading	3.52	acres/year	CalEEMod	0.002	0.0002
12	Site Grading	10.88	acres/year	CalEEMod	0.006	0.0006
15	Site Grading	4.72	acres/year	CalEEMod	0.002	0.0003
16	Site Grading	36.04	acres/year	CalEEMod	0.019	0.0021

Unpaved Travel On-site Construction Activities [3]

Year	Activity/Source	VMT		Emissions Factor	Tons/Year PM10	Tons/Year PM2.5
-3	Autos	2,847.0	miles/year	CalEEMod	1.883	0.188
-3	Trucks	126.6	miles/year	CalEEMod	0.084	0.008
-2	Autos	25,193.4	miles/year	CalEEMod	16.662	1.663
-2	Trucks	726.6	miles/year	CalEEMod	0.481	0.048
-1	Autos	42,336.6	miles/year	CalEEMod	28.000	2.795
-1	Trucks	442.2	miles/year	CalEEMod	0.293	0.029
1	Autos	3,032.4	miles/year	CalEEMod	2.006	0.200
1	Trucks	4.8	miles/year	CalEEMod	0.003	0.000
2	Autos	2,896.8	miles/year	CalEEMod	1.916	0.191
2	Trucks	4.8	miles/year	CalEEMod	0.003	0.000
3	Autos	1,039.2	miles/year	CalEEMod	0.687	0.069
3	Trucks	3.0	miles/year	CalEEMod	0.002	0.000
4	Autos	15,054.0	miles/year	CalEEMod	9.956	0.994
4	Trucks	282.0	miles/year	CalEEMod	0.187	0.019
5	Autos	21,332.4	miles/year	CalEEMod	14.108	1.408
5	Trucks	345.6	miles/year	CalEEMod	0.229	0.023
6	Autos	187.2	miles/year	CalEEMod	0.124	0.012
6	Trucks	1.2	miles/year	CalEEMod	0.001	0.000
7	Autos	979.2	miles/year	CalEEMod	0.648	0.065
7	Trucks	0.6	miles/year	CalEEMod	0.000	0.000
9	Autos	937.8	miles/year	CalEEMod	0.620	0.062
9	Trucks	1.2	miles/year	CalEEMod	0.001	0.000
10	Autos	531.6	miles/year	CalEEMod	0.352	0.035
10	Trucks	1.2	miles/year	CalEEMod	0.001	0.000
11	Autos	1,568.4	miles/year	CalEEMod	1.037	0.104
11	Trucks	1.2	miles/year	CalEEMod	0.001	0.000
12	Autos	1,780.2	miles/year	CalEEMod	1.177	0.118
12	Trucks	1.2	miles/year	CalEEMod	0.001	0.000
13	Autos	480.6	miles/year	CalEEMod	0.318	0.032
13	Trucks	0.6	miles/year	CalEEMod	0.000	0.000
14	Autos	93.6	miles/year	CalEEMod	0.062	0.006
15	Autos	601.2	miles/year	CalEEMod	0.398	0.040
16	Autos	4,507.8	miles/year	CalEEMod	2.981	0.298
16	Trucks	3.0	miles/year	CalEEMod	0.002	0.000
17	Autos	93.6	miles/year	CalEEMod	0.062	0.006
18	Autos	93.6	miles/year	CalEEMod	0.062	0.006

Unpaved Travel 14-Mile Fuel Line Construction Activities [3]

Year	Activity/Source	VMT		Emissions Factor	Tons/Year PM10	Tons/Year PM2.5
-2	Autos	9,034.8	miles/year	CalEEMod	5.975	0.596
-2	Trucks	40.2	miles/year	CalEEMod	0.027	0.003

Unpaved Travel 115KV Interconnect and Substation Construction Activities [3]

Year	Activity/Source	VMT		Emissions Factor	Tons/Year PM10	Tons/Year PM2.5
-3	Autos	733.2	miles/year	CalEEMod	0.485	0.048

1. Grading Emissions were calculated using CalEEMod which used the following methodology.

$EF_{PM15} = 0.051 \times (S)^{2.0}$, and $EF_{PM10} = EF_{PM15} \times F_{PM10}$

$EF_{TSP} = 0.04 \times (S)^{1.5}$, and $EF_{PM2.5} = EF_{TSP} \times F_{PM2.5}$

Where,
EF = emissions factor (lb/VMT)
S = mean vehicle speed (mph). AP-42 default is 7.1 mph.
$F_{PM2.5} = PM_{2.5}$ scaling factor. AP-42 default is 0.031.
$F_{PM10} = PM_{10}$ scaling factor. AP-42 default is 0.6.
Then,
E = EF x VMT
VMT = As / Wb x 43,560 (sqft/acre) / 5,280 (ft/mile)
Where,
E = emissions (lb)
EF = emissions factor (lb/VMT)
VMT = vehicle miles travels (mile)
As = acreage of the grading site (acre)
Wb = Blade with of the grading equipment. Default blade width of 12 ft.

2. Cut and Fill emissions were calculated using CalEEMod which used the following methodology.

$EF = k \times (0.0032) \times [(U/5)^{1.3}/(M/2)^{1.4}]$
Where,
EF = emissions factor (lb/ton)
k = particle size multiplier. AP-42 default is PM_{10} = 0.35 and $PM_{2.5}$ = 0.053
U = mean wind speed (mph). Based on location perameters.
M = material moisture content (%). Default = 12%
Then,
E = EF x TP
Where,
E = emissions (lb)
EF = emissions factor (lb/ton)
TP = throughput of loaded and unloaded materials (ton). Assumes 1.2641662 tons per CY.

3. Unpaved road traveled emissions were calculated using CelEEMod which used the following methodology.

$EF = \{[[k \times (s/12)^1 \times (S/30)^{0.5}]/[(M/0.5)^{0.2}]]-C\} \times [1 - (P/365)]$
Where,
EF = emission factor
k = particle size multiplier
s = surface material silt content (%)
M = surface material moisture content (%)
S = mean vehicle speed (mph)
C = emissions factor for 1980's vehicle fleet exhaust, brake wear and tire wear
P = number of days in a year with at least 0.254 mm of precipitation
Then,
E = EF x VMT
Where,
E = emissions
EF = emission factor
VMT = unpaved vehicle miles traveld

Construction Fugitive Dust Emission Calculations
Mitigated

Cut/Fill [2,4]

Year	Activity/Source	Fill (cubic yards)	Cut (cubic yards)	Emissions Factor	Tons/Year PM10	Tons/Year PM2.5
-3	Cut/Fill	266,903	521,238	CalEEMod	0.027	0.004
-2	Cut/Fill	310,882	435,779	CalEEMod	0.026	0.004
-1	Cut/Fill	768,987	284,010	CalEEMod	0.036	0.005
1	Cut/Fill	35,804	121,268	CalEEMod	0.005	0.001
5	Cut/Fill	975,163	1,444,936	CalEEMod	0.084	0.013
7	Cut/Fill	13,724	6,276	CalEEMod	0.001	0.0001
10	Cut/Fill	0	42,099	CalEEMod	0.001	0.0002
11	Cut/Fill	13,573	25,199	CalEEMod	0.001	0.0002
12	Cut/Fill	207,038	78,439	CalEEMod	0.010	0.001
15	Cut/Fill	17,828	11,997	CalEEMod	0.001	0.0002
16	Cut/Fill	501,266	177,032	CalEEMod	0.023	0.004

Site Grading [1,4]

Year	Activity/Source	Area Disturbed		Emissions Factor	Tons/Year PM10	Tons/Year PM2.5
-3	Site Grading	50.53	acres/year	CalEEMod	0.010	0.001
-2	Site Grading	42.41	acres/year	CalEEMod	0.009	0.001
-1	Site Grading	59.80	acres/year	CalEEMod	0.012	0.0013
1	Site Grading	10.59	acres/year	CalEEMod	0.002	0.0002
5	Site Grading	81.06	acres/year	CalEEMod	0.017	0.002
7	Site Grading	2.50	acres/year	CalEEMod	0.0005	0.0001
10	Site Grading	3.00	acres/year	CalEEMod	0.001	0.0001
11	Site Grading	3.52	acres/year	CalEEMod	0.0007	0.0001
12	Site Grading	10.88	acres/year	CalEEMod	0.002	0.0002
15	Site Grading	4.72	acres/year	CalEEMod	0.0010	0.0001
16	Site Grading	36.04	acres/year	CalEEMod	0.007	0.0008

Unpaved Travel On-site Construction Activities [3,4,5]

Year	Activity/Source	Area Disturbed		Emissions Factor	Tons/Year PM10	Tons/Year PM2.5
-3	Unpaved Roads Autos	2,847.0	miles/year	CalEEMod	0.450	0.045
-3	Unpaved Roads Trucks	126.6	miles/year	CalEEMod	0.020	0.002
-2	Unpaved Roads Autos	25,193.4	miles/year	CalEEMod	3.979	0.397
-2	Unpaved Roads Trucks	726.6	miles/year	CalEEMod	0.115	0.011
-1	Unpaved Roads Autos	42,336.6	miles/year	CalEEMod	6.686	0.667
-1	Unpaved Roads Trucks	442.2	miles/year	CalEEMod	0.070	0.007
1	Unpaved Roads Autos	3,032.4	miles/year	CalEEMod	0.479	0.048
1	Unpaved Roads Trucks	4.8	miles/year	CalEEMod	0.001	0.000
2	Unpaved Roads Autos	2,896.8	miles/year	CalEEMod	0.458	0.046
2	Unpaved Roads Trucks	4.8	miles/year	CalEEMod	0.001	0.000
3	Unpaved Roads Autos	1,039.2	miles/year	CalEEMod	0.164	0.016
3	Unpaved Roads Trucks	3.0	miles/year	CalEEMod	0.000	0.000
4	Unpaved Roads Autos	15,054.0	miles/year	CalEEMod	2.378	0.237
4	Unpaved Roads Trucks	282.0	miles/year	CalEEMod	0.045	0.004
5	Unpaved Roads Autos	21,332.4	miles/year	CalEEMod	3.369	0.336
5	Unpaved Roads Trucks	345.6	miles/year	CalEEMod	0.140	0.005
6	Unpaved Roads Autos	187.2	miles/year	CalEEMod	0.030	0.003
6	Unpaved Roads Trucks	1.2	miles/year	CalEEMod	0.000	0.000
7	Unpaved Roads Autos	979.2	miles/year	CalEEMod	0.155	0.015
7	Unpaved Roads Trucks	0.6	miles/year	CalEEMod	0.000	0.000
9	Unpaved Roads Autos	937.8	miles/year	CalEEMod	0.148	0.015
9	Unpaved Roads Trucks	1.2	miles/year	CalEEMod	0.000	0.000
10	Unpaved Roads Autos	531.6	miles/year	CalEEMod	0.084	0.008
10	Unpaved Roads Trucks	1.2	miles/year	CalEEMod	0.000	0.000
11	Unpaved Roads Autos	1,568.4	miles/year	CalEEMod	0.248	0.025
11	Unpaved Roads Trucks	1.2	miles/year	CalEEMod	0.000	0.000
12	Unpaved Roads Autos	1,780.2	miles/year	CalEEMod	0.281	0.028
12	Unpaved Roads Trucks	1.2	miles/year	CalEEMod	0.000	0.000
13	Unpaved Roads Autos	480.6	miles/year	CalEEMod	0.076	0.008
13	Unpaved Roads Trucks	0.6	miles/year	CalEEMod	0.000	0.000
14	Unpaved Roads Autos	93.6	miles/year	CalEEMod	0.015	0.001
15	Unpaved Roads Autos	601.2	miles/year	CalEEMod	0.095	0.009
16	Unpaved Roads Autos	4,507.8	miles/year	CalEEMod	0.712	0.071
16	Unpaved Roads Trucks	3.0	miles/year	CalEEMod	0.000	0.000
17	Unpaved Roads Autos	93.6	miles/year	CalEEMod	0.015	0.001
18	Unpaved Roads Autos	93.6	miles/year	CalEEMod	0.015	0.001

Unpaved Travel 14-Mile Fuel Line Construction Activities [3,4,5]

Year	Activity/Source	Area Disturbed		Emissions Factor	Tons/Year PM10	Tons/Year PM2.5
-2	Unpaved Roads Autos	9,034.8	miles/year	CalEEMod	1.427	0.142
-2	Unpaved Roads Trucks	40.2	miles/year	CalEEMod	0.006	0.001

Unpaved Travel 115KV Interconnect and Substation Construction Activities [3,4,5]

Year	Activity/Source	Area Disturbed		Emissions Factor	Tons/Year PM10	Tons/Year PM2.5
-3	Unpaved Roads Autos	733.2	miles/year	CalEEMod	0.116	0.012

1. Grading Emissions were calculated using CalEEMod which used the following methodology.

$EF_{PM15} = 0.051 \times (S)^{2.0}$, and $EF_{PM10} = EF_{PM15} \times F_{PM10}$

$EF_{TSP} = 0.04 \times (S)^{1.5}$, and $EF_{PM2.5} = EF_{TSP} \times F_{PM2.5}$

Where,
EF = emissions factor (lb/VMT)
S = mean vehicle speed (mph). AP-42 default is 7.1 mph.
$F_{PM2.5} = PM_{2.5}$ scaling factor. AP-42 default is 0.031.
$F_{PM10} = PM_{10}$ scaling factor. AP-42 default is 0.6.
Then,
E = EF x VMT
VMT = As / Wb x 43,560 (sqft/acre) / 5,280 (ft/mile)
Where,
E = emissions (lb)
EF = emissions factor (lb/VMT)
VMT = vehicle miles travels (mile)
As = acreage of the grading site (acre)
Wb = Blade with of the grading equipment. Default blade width of 12 ft.

2. Cut and Fill emissions were calculated using CalEEMod which used the following methodology.

$EF = k \times (0.0032) \times [(U/5)^{1.3}/(M/2)^{1.4}]$
Where,
EF = emissions factor (lb/ton)
k = particle size multiplier. AP-42 default is PM_{10} = 0.35 and $PM_{2.5}$ = 0.053
U = mean wind speed (mph). Based on location perameters.
M = material moisture content (%). Default = 12%
Then,
E = EF x TP
Where,
E = emissions (lb)
EF = emissions factor (lb/ton)
TP = throughput of loaded and unloaded materials (ton). Assumes 1.2641662 tons per CY.

3. Unpaved road traveled emissions were calculated using CelEEMod which used the following methodology.

$EF = \{[[k \times (s/12)^1 \times (S/30)^{0.5}]/[(M/0.5)^{0.2}]]-C\} \times [1 - (P/365)]$
Where,
EF = emission factor
k = particle size multiplier
s = surface material silt content (%)
M = surface material moisture content (%)
S = mean vehicle speed (mph)
C = emissions factor for 1980's vehicle fleet exhaust, brake wear and tire wear
P = number of days in a year with at least 0.254 mm of precipitation
Then,
E = EF x VMT
Where,
E = emissions
EF = emission factor
VMT = unpaved vehicle miles traveld

4. Mitigation selected in CalEEMod were watering 3 times per day and reduce vehicle speed to less than 15 mph.
5. CalEEMod does not give mitigation credit for water to unpaved road travel since the model thinks it is offsite travel, therefore, a 61% reduction (CalEEMod default factor) of the unpaved road travel fugitive dust emissions was taken manually to acount for the onsite unpaved roads being watered 3 times daily.

AERA - Santa Barbara County - Cat Canyon - ECC Project

Construction Off-Site Emission Calculations
Unmitigated

								Emission Factor (g/mile)									Emissions (tons/year)						Emissions (MT/year)			
Year	Activity/Source	Vehicle		Fuel-Speed	From	Annual R.T.	Miles per R.T.	ROC	CO	NOx	SOx	PM10	PM2.5	N2O	CH4	CO2	ROC	CO	NOx	SOx	PM10	PM2.5	N2O	CH4	CO2	CO2e
-2	Equipment/Materials Delivery	Truck	T7 Tractor Con.	D-55	SM	16	32.4	0.082782	0.342965	5.067052	0.00	0.04262	0.040776	0.0048	0.0051	1497.538	0.00	0.00	0.00	0.00	0.00	0.00	0.00	0.00	0.78	0.78
-2	Equipment/Materials Delivery	Truck	T7 Tractor Con.	D-55	BAK	5	276	0.082782	0.342965	5.067052	0.00	0.04262	0.040776	0.0048	0.0051	1497.538	0.00	0.00	0.01	0.00	0.00	0.00	0.00	0.00	2.07	2.07
-2	Equipment/Materials Delivery	Truck	T7 Tractor Con.	D-55	50/50	40	154.2	0.082782	0.342965	5.067052	0.00	0.04262	0.040776	0.0048	0.0051	1497.538	0.00	0.00	0.03	0.00	0.00	0.00	0.00	0.00	9.24	9.25
-2	Employees	Auto	LDA	G-55	SM	2,444	32.4	0.019293	0.199246	0.175843	0.00	0.013227	0.012655	0.0647	0.0704	251.7188	0.00	0.02	0.02	0.00	0.00	0.00	0.01	0.01	19.93	21.64
-1	Equipment/Materials Delivery	Truck	T7 Tractor Con.	D-55	SM	270	32.4	0.062672	0.267293	4.268094	0.00	0.028011	0.026799	0.0048	0.0051	1483.078	0.00	0.00	0.04	0.00	0.00	0.00	0.00	0.00	12.97	12.99
-1	Equipment/Materials Delivery	Truck	T7 Tractor Con.	D-55	BAK	72	276	0.062672	0.267293	4.268094	0.00	0.028011	0.026799	0.0048	0.0051	1483.078	0.00	0.01	0.09	0.00	0.00	0.00	0.00	0.00	29.47	29.50
-1	Equipment/Materials Delivery	Truck	T7 Tractor Con.	D-55	50/50	690	154.2	0.062672	0.267293	4.268094	0.00	0.028011	0.026799	0.0048	0.0051	1483.078	0.01	0.03	0.50	0.00	0.00	0.00	0.00	0.00	157.80	157.97
-1	Employees	Auto	LDA	G-55	SM	14,711	32.4	0.012154	0.607815	0.071279	0.00	0.001335	0.001228	0.0647	0.0704	240.612	0.01	0.32	0.04	0.00	0.00	0.00	0.03	0.03	114.68	124.95
2	Equipment/Materials Delivery	Truck	T7 Tractor Con.	D-55	SM	6	32.4	0.057764	0.25314	3.677975	0.00	0.024166	0.02312	0.0048	0.0051	1467.587	0.00	0.00	0.00	0.00	0.00	0.00	0.00	0.00	0.29	0.29
2	Equipment/Materials Delivery	Truck	T7 Tractor Con.	D-55	BAK	1	276	0.057764	0.25314	3.677975	0.00	0.024166	0.02312	0.0048	0.0051	1467.587	0.00	0.00	0.00	0.00	0.00	0.00	0.00	0.00	0.41	0.41
2	Equipment/Materials Delivery	Truck	T7 Tractor Con.	D-55	50/50	16	154.2	0.057764	0.25314	3.677975	0.00	0.024166	0.02312	0.0048	0.0051	1467.587	0.00	0.00	0.01	0.00	0.00	0.00	0.00	0.00	3.62	3.62
2	Employees	Auto	LDA	G-55	SM	1,222	32.4	0.010841	0.562104	0.064352	0.00	0.001318	0.001212	0.0647	0.0704	233.5884	0.00	0.02	0.00	0.00	0.00	0.00	0.00	0.00	9.25	10.10
3	Equipment/Materials Delivery	Truck	T7 Tractor Con.	D-55	SM	6	32.4	0.052711	0.235751	3.090283	0.00	0.019384	0.018546	0.0048	0.0051	1449.996	0.00	0.00	0.00	0.00	0.00	0.00	0.00	0.00	0.28	0.28
3	Equipment/Materials Delivery	Truck	T7 Tractor Con.	D-55	BAK	1	276	0.052711	0.235751	3.090283	0.00	0.019384	0.018546	0.0048	0.0051	1449.996	0.00	0.00	0.00	0.00	0.00	0.00	0.00	0.00	0.40	0.40
3	Equipment/Materials Delivery	Truck	T7 Tractor Con.	D-55	50/50	16	154.2	0.052711	0.235751	3.090283	0.00	0.019384	0.018546	0.0048	0.0051	1449.996	0.00	0.00	0.01	0.00	0.00	0.00	0.00	0.00	3.58	3.58
3	Employees	Auto	LDA	G-55	SM	1,222	32.4	0.009749	0.52468	0.058567	0.00	0.001305	0.0012	0.0647	0.0704	226.7004	0.00	0.02	0.00	0.00	0.00	0.00	0.00	0.00	8.98	9.83
4	Equipment/Materials Delivery	Truck	T7 Tractor Con.	D-55	SM	6	32.4	0.031069	0.182112	0.848479	0.00	0.005697	0.005451	0.0048	0.0051	1406.097	0.00	0.00	0.00	0.00	0.00	0.00	0.00	0.00	0.27	0.27
4	Equipment/Materials Delivery	Truck	T7 Tractor Con.	D-55	BAK	1	276	0.031069	0.182112	0.848479	0.00	0.005697	0.005451	0.0048	0.0051	1406.097	0.00	0.00	0.00	0.00	0.00	0.00	0.00	0.00	0.39	0.39
4	Equipment/Materials Delivery	Truck	T7 Tractor Con.	D-55	50/50	16	154.2	0.031069	0.182112	0.848479	0.00	0.005697	0.005451	0.0048	0.0051	1406.097	0.00	0.00	0.00	0.00	0.00	0.00	0.00	0.00	3.47	3.47
4	Employees	Auto	LDA	G-55	SM	1,222	32.4	0.008792	0.491256	0.053621	0.00	0.001296	0.001192	0.0647	0.0704	219.9673	0.00	0.02	0.00	0.00	0.00	0.00	0.00	0.00	8.71	9.56
5	Equipment/Materials Delivery	Truck	T7 Tractor Con.	D-55	SM	281	32.4	0.031163	0.182958	0.80919	0.00	0.005637	0.005393	0.0048	0.0051	1399.408	0.00	0.00	0.01	0.00	0.00	0.00	0.00	0.00	12.74	12.76
5	Equipment/Materials Delivery	Truck	T7 Tractor Con.	D-55	BAK	74	276	0.031163	0.182958	0.80919	0.00	0.005637	0.005393	0.0048	0.0051	1399.408	0.00	0.00	0.02	0.00	0.00	0.00	0.00	0.00	28.58	28.61
5	Equipment/Materials Delivery	Truck	T7 Tractor Con.	D-55	50/50	717	154.2	0.031163	0.182958	0.80919	0.00	0.005637	0.005393	0.0048	0.0051	1399.408	0.00	0.02	0.10	0.00	0.00	0.00	0.00	0.00	154.72	154.90
5	Employees	Auto	LDA	G-55	SM	14,758	32.4	0.007953	0.460768	0.049335	0.00	0.001291	0.001187	0.0647	0.0704	213.3629	0.00	0.24	0.03	0.00	0.00	0.00	0.03	0.03	102.02	112.32
6	Equipment/Materials Delivery	Truck	T7 Tractor Con.	D-55	SM	12	32.4	0.031098	0.182794	0.765484	0.00	0.005564	0.005323	0.0048	0.0051	1392.862	0.00	0.00	0.00	0.00	0.00	0.00	0.00	0.00	0.54	0.54
6	Equipment/Materials Delivery	Truck	T7 Tractor Con.	D-55	BAK	4	276	0.031098	0.182794	0.765484	0.00	0.005564	0.005323	0.0048	0.0051	1392.862	0.00	0.00	0.00	0.00	0.00	0.00	0.00	0.00	1.54	1.54
6	Equipment/Materials Delivery	Truck	T7 Tractor Con.	D-55	50/50	32	154.2	0.031098	0.182794	0.765484	0.00	0.005564	0.005323	0.0048	0.0051	1392.862	0.00	0.00	0.00	0.00	0.00	0.00	0.00	0.00	6.87	6.88
6	Employees	Auto	LDA	G-55	SM	2,491	32.4	0.00731	0.434941	0.045875	0.00	0.001292	0.001188	0.0647	0.0704	206.8211	0.00	0.04	0.00	0.00	0.00	0.00	0.01	0.01	16.69	18.43
7	Equipment/Materials Delivery	Truck	T7 Tractor Con.	D-55	SM	47	32.4	0.030977	0.182252	0.723789	0.00	0.005494	0.005256	0.0048	0.0051	1386.476	0.00	0.00	0.00	0.00	0.00	0.00	0.00	0.00	2.11	2.11
7	Equipment/Materials Delivery	Truck	T7 Tractor Con.	D-55	BAK	13	276	0.030977	0.182252	0.723789	0.00	0.005494	0.005256	0.0048	0.0051	1386.476	0.00	0.00	0.00	0.00	0.00	0.00	0.00	0.00	4.97	4.98
7	Equipment/Materials Delivery	Truck	T7 Tractor Con.	D-55	50/50	120	154.2	0.030977	0.182252	0.723789	0.00	0.005494	0.005256	0.0048	0.0051	1386.476	0.00	0.00	0.01	0.00	0.00	0.00	0.00	0.00	25.66	25.68
7	Employees	Auto	LDA	G-55	SM	6,204	32.4	0.006762	0.413027	0.042909	0.00	0.001273	0.00117	0.0647	0.0704	200.9665	0.00	0.09	0.01	0.00	0.00	0.00	0.01	0.01	40.40	44.73
8	Equipment/Materials Delivery	Truck	T7 Tractor Con.	D-55	SM	19	32.4	0.030751	0.181048	0.681196	0.00	0.005412	0.005178	0.0048	0.0051	1379.957	0.00	0.00	0.00	0.00	0.00	0.00	0.00	0.00	0.85	0.85
8	Equipment/Materials Delivery	Truck	T7 Tractor Con.	D-55	BAK	5	276	0.030751	0.181048	0.681196	0.00	0.005412	0.005178	0.0048	0.0051	1379.957	0.00	0.00	0.00	0.00	0.00	0.00	0.00	0.00	1.90	1.91
8	Equipment/Materials Delivery	Truck	T7 Tractor Con.	D-55	50/50	47	154.2	0.030751	0.181048	0.681196	0.00	0.005412	0.005178	0.0048	0.0051	1379.957	0.00	0.00	0.01	0.00	0.00	0.00	0.00	0.00	10.00	10.01
8	Employees	Auto	LDA	G-55	SM	2,444	32.4	0.006257	0.393078	0.040221	0.00	0.001226	0.001127	0.0647	0.0704	195.6982	0.00	0.03	0.00	0.00	0.00	0.00	0.01	0.01	15.50	17.20
9	Equipment/Materials Delivery	Truck	T7 Tractor Con.	D-55	SM	16	32.4	0.030512	0.179741	0.63938	0.00	0.005336	0.005105	0.0048	0.0051	1373.305	0.00	0.00	0.00	0.00	0.00	0.00	0.00	0.00	0.71	0.71
9	Equipment/Materials Delivery	Truck	T7 Tractor Con.	D-55	BAK	5	276	0.030512	0.179741	0.63938	0.00	0.005336	0.005105	0.0048	0.0051	1373.305	0.00	0.00	0.00	0.00	0.00	0.00	0.00	0.00	1.90	1.90
9	Equipment/Materials Delivery	Truck	T7 Tractor Con.	D-55	50/50	40	154.2	0.030512	0.179741	0.63938	0.00	0.005336	0.005105	0.0048	0.0051	1373.305	0.00	0.00	0.00	0.00	0.00	0.00	0.00	0.00	8.47	8.48
9	Employees	Auto	LDA	G-55	SM	2,444	32.4	0.0058	0.374918	0.037794	0.00	0.001154	0.001061	0.0647	0.0704	191.0012	0.00	0.03	0.00	0.00	0.00	0.00	0.01	0.01	15.12	16.83
10	Equipment/Materials Delivery	Truck	T7 Tractor Con.	D-55	SM	43	32.4	0.030298	0.178563	0.602128	0.00	0.005271	0.005043	0.0048	0.0051	1367.262	0.00	0.00	0.00	0.00	0.00	0.00	0.00	0.00	1.90	1.91
10	Equipment/Materials Delivery	Truck	T7 Tractor Con.	D-55	BAK	12	276	0.030298	0.178563	0.602128	0.00	0.005271	0.005043	0.0048	0.0051	1367.262	0.00	0.00	0.00	0.00	0.00	0.00	0.00	0.00	4.53	4.53
10	Equipment/Materials Delivery	Truck	T7 Tractor Con.	D-55	50/50	110	154.2	0.030298	0.178563	0.602128	0.00	0.005271	0.005043	0.0048	0.0051	1367.262	0.00	0.00	0.01	0.00	0.00	0.00	0.00	0.00	23.19	23.22
10	Employees	Auto	LDA	G-55	SM	4,935	32.4	0.005374	0.357737	0.035538	0.00	0.001084	0.000997	0.0647	0.0704	186.8172	0.00	0.06	0.01	0.00	0.00	0.00	0.01	0.01	29.87	33.31
11	Equipment/Materials Delivery	Truck	T7 Tractor Con.	D-55	SM	66	32.4	0.030099	0.177459	0.568774	0.00	0.005213	0.004987	0.0048	0.0051	1361.643	0.00	0.00	0.00	0.00	0.00	0.00	0.00	0.00	2.91	2.92
11	Equipment/Materials Delivery	Truck	T7 Tractor Con.	D-55	BAK	18	276	0.030099	0.177459	0.568774	0.00	0.005213	0.004987	0.0048	0.0051	1361.643	0.00	0.00	0.00	0.00	0.00	0.00	0.00	0.00	6.76	6.77
11	Equipment/Materials Delivery	Truck	T7 Tractor Con.	D-55	50/50	169	154.2	0.030099	0.177459	0.568774	0.00	0.005213	0.004987	0.0048	0.0051	1361.643	0.00	0.01	0.02	0.00	0.00	0.00	0.00	0.00	35.48	35.53
11	Employees	Auto	LDA	G-55	SM	7,426	32.4	0.005005	0.342518	0.033517	0.00	0.00102	0.000938	0.0647	0.0704	183.1037	0.00	0.09	0.01	0.00	0.00	0.00	0.02	0.02	44.06	49.24
12	Equipment/Materials Delivery	Truck	T7 Tractor Con.	D-55	SM	45	32.4	0.029932	0.176529	0.539591	0.00	0.005165	0.004942	0.0048	0.0051	1356.632	0.00	0.00	0.00	0.00	0.00	0.00	0.00	0.00	1.98	1.98
12	Equipment/Materials Delivery	Truck	T7 Tractor Con.	D-55	BAK	12	276	0.029932	0.176529	0.539591	0.00	0.005165	0.004942	0.0048	0.0051	1356.632	0.00	0.00	0.00	0.00	0.00	0.00	0.00	0.00	4.49	4.50
12	Equipment/Materials Delivery	Truck	miles/year	D-55	50/50	115	154.2	0.029932	0.176529	0.539591	0.00	0.005165	0.004942	0.0048	0.0051	1356.632	0.00	0.00	0.01	0.00	0.00	0.00	0.00	0.00	24.06	24.09
12	Employees	Auto	LDA	G-55	SM	4,982	32.4	0.004669	0.328383	0.031679	0.00	0.000959	0.000882	0.0647	0.0704	179.8219	0.00	0.06	0.01	0.00	0.00	0.00	0.01	0.01	29.03	32.50
13	Equipment/Materials Delivery	Truck	T7 Tractor Con.	D-55	SM	49	32.4	0.029779	0.175667	0.513208	0.00	0.005125	0.004903	0.0048	0.0051	1352.045	0.00	0.00	0.00	0.00	0.00	0.00	0.00	0.00	2.15	2.15
13	Equipment/Materials Delivery	Truck	T7 Tractor Con.	D-55	BAK	13	276	0.029779	0.175667	0.513208	0.00	0.005125	0.004903	0.0048	0.0051	1352.045	0.00	0.00	0.00	0.00	0.00	0.00	0.00	0.00	4.85	4.86
13	Equipment/Materials Delivery	Truck	T7 Tractor Con.	D-55	50/50	125	154.2	0.029779	0.175667	0.513208	0.00	0.005125	0.004903	0.0048	0.0051	1352.045	0.00	0.00	0.01	0.00	0.00	0.00	0.00	0.00	26.06	26.09
13	Employees	Auto	miles/year	G-55	SM	6,110	32.4	0.004364	0.315243	0.030018	0.00	0.000903	0.00083	0.0647	0.0704	176.9316	0.00	0.07	0.01	0.00	0.00	0.00	0.01	0.01	35.03	39.29
14	Equipment/Materials Delivery	Truck	T7 Tractor Con.	D-55	SM	16	32.4	0.029637	0.174864	0.489092	0.00	0.005089	0.004869	0.0048	0.0051	1347.839	0.00	0.00	0.00	0.00	0.00	0.00	0.00	0.00	0.70	0.70
14	Equipment/Materials Delivery	Truck	T7 Tractor Con.	D-55	BAK	5	276	0.029637	0.174864	0.489092	0.00	0.005089	0.004869	0.0048	0.0051	1347.839	0.00	0.00	0.00	0.00	0.00	0.00	0.00	0.00	1.86	1.86
14	Equipment/Materials Delivery	Truck	T7 Tractor Con.	D-55	50/50	40	154.2	0.029637	0.174864	0.489092	0.00	0.005089	0.004869	0.0048	0.0051	1347.839	0.00	0.00	0.00	0.00	0.00	0.00	0.00	0.00	8.31	8.32
14	Employees	Auto	LDA	G-55	SM	2,444	32.4	0.004092	0.303202	0.028556	0.00	0.00085	0.000781	0.0647	0.0704	174.4064	0.00	0.03	0.00	0.00	0.00	0.00	0.01	0.01	13.81	15.52
15	Equipment/Materials Delivery	Truck	T7 Tractor Con.	D-55	SM	55	32.4	0.029503	0.174106	0.467657	0.00	0.005058	0.004839	0.0048	0.0051	1344.082	0.00	0.00	0.00	0.00	0.00	0.00	0.00	0.00	2.40	2.40
15	Equipment/Materials Delivery	Truck	T7 Tractor Con.	D-55	BAK	14	276	0.029503	0.174106	0.467657	0.00	0.005058	0.004839	0.0048	0.0051	1344.082	0.00	0.00	0.00	0.00	0.00	0.00	0.00	0.00	5.19	5.20
15	Equipment/Materials Delivery	Truck	T7 Tractor Con.	D-55	50/50	141	154.2	0.029503	0.174106	0.467657	0.00	0.005058	0.004839	0.0048	0.0051	1344.082	0.00	0.00	0.01	0.00	0.00	0.00	0.00	0.00	29.22	29.26
15	Employees	Auto	LDA	G-55	SM	6,157	32.4	0.003836	0.291645	0.027269	0.00	0.0008	0.000735	0.0647	0.0704	172.2119	0.00	0.06	0.01	0.00	0.00	0.00	0.01	0.01	34.35	38.65
16	Equipment/Materials Delivery	Truck	T7 Tractor Con.	D-55	SM	110	32.4	0.029394	0.173486	0.450586	0.00	0.005032	0.004814	0.0048	0.0051	1341.015	0.00	0.00	0.00	0.00	0.00	0.00	0.00	0.00	4.78	4.79
16	Equipment/Materials Delivery	Truck	T7 Tractor Con.	D-55	BAK	29	276	0.029394	0.173486	0.450586	0.00	0.005032	0.004814	0.0048	0.0051	1341.015	0.00	0.00	0.00	0.00	0.00	0.00	0.00	0.00	10.73	10.75
16	Equipment/Materials Delivery	Truck	T7 Tractor Con.	D-55	50/50	281	154.2	0.029394	0.173486	0.450586	0.00	0.005032	0.004814	0.0048	0.0051	1341.015	0.00	0.01	0.02	0.00	0.00	0.00	0.00	0.00	58.11	58.18
16	Employees	Auto	LDA	G-55	SM	13,489	32.4	0.003591	0.280518	0.026127	0.00	0.000753	0.000692	0.0647	0.0704	170.3208	0.00	0.14	0.01	0.00	0.00	0.00	0.03	0.03	74.44	83.85
17	Equipment/Materials Delivery	Truck	T7 Tractor Con.	D-55	SM	22	32.4	0.029303	0.172967	0.436146	0.00	0.005011	0.004794	0.0048	0.0051	1338.401	0.00	0.00	0.00	0.00	0.00	0.00	0.00	0.00	0.95	0.96
17	Equipment/Materials Delivery	Truck	T7 Tractor Con.	D-55	BAK	6	276	0.029303	0.172967	0.436146	0.00	0.005011	0.004794	0.0048	0.0051	1338.401	0.00	0.00	0.00	0.00	0.00	0.00	0.00	0.00	2.22	2.22
17	Equipment/Materials Delivery	Truck	T7 Tractor Con.	D-55	50/50	55	154.2	0.029303	0.172967	0.436146	0.00	0.005011	0.004794	0.0048	0.0051	1338.401	0.00	0.00	0.00	0.00	0.00	0.00	0.00	0.00	11.35	11.36
17	Employees	Auto	LDA	G-55	SM	2,491	32.4	0.003376	0.270557	0.025141	0.00	0.000712	0.000654	0.0647	0.0704	168.7141	0.00	0.02	0.00	0.00	0.00	0.00	0.01	0.01	13.62	15.35
18	Equipment/Materials Delivery	Truck	T7 Tractor Con.	D-55	SM	22	32.4	0.029209	0.172422	0.421196	0.00	0.00499	0.004774	0.0048	0.0051	1335.756	0.00	0.00	0.00	0.00	0.00	0.00	0.00	0.00	0.95	0.95
18	Equipment/Materials Delivery	Truck	T7 Tractor Con.	D-55	BAK	6	276	0.029209	0.172422	0.421196	0.00	0.00499	0.004774	0.0048	0.0051	1335.756	0.00	0.00	0.00	0.00	0.00	0.00	0.00	0.00	2.21	2.21
18	Equipment/Materials Delivery	Truck	T7 Tractor Con.	D-55	50/50	55	154.2	0.029209	0.172422	0.421196	0.00	0.00499	0.004774	0.0048	0.0051	1335.756	0.00	0.00	0.00	0.00	0.00	0.00	0.00	0.00	11.33	11.34
18	Employees	Auto	LDA	G-55	SM	2,491	32.4	0.003205	0.262174	0.024348	0.00	0.000675	0.00062	0.0647	0.0704	167.3719	0.00	0.02	0.00	0.00	0.00	0.00	0.01	0.01	13.51	15.25
19	Equipment/Materials Delivery	Truck	T7 Tractor Con.	D-55	SM	22	32.4	0.029137	0.172008	0.409033	0.00	0.004975	0.00476	0.0048	0.0051	1333.573	0.00	0.00	0.00	0.00	0.00	0.00	0.00	0.00	0.95	0.95

19	Equipment/Materials Delivery	Truck	T7 Tractor Con.	D-55	BAK	6	276	0.029137	0.172008	0.409033	0.00	0.004975	0.00476	0.0048	0.0051	1333.573	0.00	0.00	0.00	0.00	0.00	0.00	0.00	0.00	2.21	2.21
19	Equipment/Materials Delivery	Truck	T7 Tractor Con.	D-55	50/50	55	154.2	0.029137	0.172008	0.409033	0.00	0.004975	0.00476	0.0048	0.0051	1333.573	0.00	0.00	0.00	0.00	0.00	0.00	0.00	0.00	11.31	11.32
19	Employees	Auto	LDA	G-55	SM	2,444	32.4	0.00307	0.255196	0.023702	0.00	0.000641	0.000589	0.0647	0.0704	166.2614	0.00	0.02	0.00	0.00	0.00	0.00	0.01	0.01	13.17	14.87
20	Equipment/Materials Delivery	Truck	T7 Tractor Con.	D-55	SM	22	32.4	0.029098	0.171786	0.401407	0.00	0.004966	0.004751	0.0048	0.0051	1332.099	0.00	0.00	0.00	0.00	0.00	0.00	0.00	0.00	0.95	0.95
20	Equipment/Materials Delivery	Truck	T7 Tractor Con.	D-55	BAK	6	276	0.029098	0.171786	0.401407	0.00	0.004966	0.004751	0.0048	0.0051	1332.099	0.00	0.00	0.00	0.00	0.00	0.00	0.00	0.00	2.21	2.21
20	Equipment/Materials Delivery	Truck	T7 Tractor Con.	D-55	50/50	55	154.2	0.029098	0.171786	0.401407	0.00	0.004966	0.004751	0.0048	0.0051	1332.099	0.00	0.00	0.00	0.00	0.00	0.00	0.00	0.00	11.30	11.31
20	Employees	Auto	LDA	G-55	SM	2,397	32.4	0.002976	0.249687	0.023218	0.00	0.000611	0.000562	0.0647	0.0704	165.3525	0.00	0.02	0.00	0.00	0.00	0.00	0.01	0.01	12.84	14.51
21	Equipment/Materials Delivery	Truck	T7 Tractor Con.	D-55	SM	22	32.4	0.029075	0.171658	0.395909	0.00	0.004961	0.004746	0.0048	0.0051	1330.934	0.00	0.00	0.00	0.00	0.00	0.00	0.00	0.00	0.95	0.95
21	Equipment/Materials Delivery	Truck	T7 Tractor Con.	D-55	BAK	6	276	0.029075	0.171658	0.395909	0.00	0.004961	0.004746	0.0048	0.0051	1330.934	0.00	0.00	0.00	0.00	0.00	0.00	0.00	0.00	2.20	2.21
21	Equipment/Materials Delivery	Truck	T7 Tractor Con.	D-55	50/50	55	154.2	0.029075	0.171658	0.395909	0.00	0.004961	0.004746	0.0048	0.0051	1330.934	0.00	0.00	0.00	0.00	0.00	0.00	0.00	0.00	11.29	11.30
21	Employees	Auto	LDA	G-55	SM	2,444	32.4	0.002904	0.245176	0.022832	0.00	0.000585	0.000538	0.0647	0.0704	164.6156	0.00	0.02	0.00	0.00	0.00	0.00	0.01	0.01	13.04	14.74
22	Equipment/Materials Delivery	Truck	T7 Tractor Con.	D-55	SM	22	32.4	0.029066	0.171609	0.391533	0.00	0.004959	0.004744	0.0048	0.0051	1330.027	0.00	0.00	0.00	0.00	0.00	0.00	0.00	0.00	0.95	0.95
22	Equipment/Materials Delivery	Truck	T7 Tractor Con.	D-55	BAK	6	276	0.029066	0.171609	0.391533	0.00	0.004959	0.004744	0.0048	0.0051	1330.027	0.00	0.00	0.00	0.00	0.00	0.00	0.00	0.00	2.20	2.21
22	Equipment/Materials Delivery	Truck	T7 Tractor Con.	D-55	50/50	55	154.2	0.029066	0.171609	0.391533	0.00	0.004959	0.004744	0.0048	0.0051	1330.027	0.00	0.00	0.00	0.00	0.00	0.00	0.00	0.00	11.28	11.29
22	Employees	Auto	LDA	G-55	SM	2,444	32.4	0.002853	0.241651	0.022547	0.00	0.000564	0.000518	0.0647	0.0704	164.0301	0.00	0.02	0.00	0.00	0.00	0.00	0.01	0.01	12.99	14.69
23	Equipment/Materials Delivery	Truck	T7 Tractor Con.	D-55	SM	22	32.4	0.029061	0.171581	0.387468	0.00	0.004957	0.004743	0.0048	0.0051	1329.213	0.00	0.00	0.00	0.00	0.00	0.00	0.00	0.00	0.95	0.95
23	Equipment/Materials Delivery	Truck	T7 Tractor Con.	D-55	BAK	6	276	0.029061	0.171581	0.387468	0.00	0.004957	0.004743	0.0048	0.0051	1329.213	0.00	0.00	0.00	0.00	0.00	0.00	0.00	0.00	2.20	2.20
23	Equipment/Materials Delivery	Truck	T7 Tractor Con.	D-55	50/50	55	154.2	0.029061	0.171581	0.387468	0.00	0.004957	0.004743	0.0048	0.0051	1329.213	0.00	0.00	0.00	0.00	0.00	0.00	0.00	0.00	11.27	11.29
23	Employees	Auto	LDA	G-55	SM	2,491	32.4	0.002812	0.238742	0.022317	0.00	0.000546	0.000502	0.0647	0.0704	163.5652	0.00	0.02	0.00	0.00	0.00	0.00	0.01	0.01	13.20	14.94
24	Equipment/Materials Delivery	Truck	T7 Tractor Con.	D-55	SM	22	32.4	0.029065	0.17161	0.384547	0.00	0.004958	0.004744	0.0048	0.0051	1328.601	0.00	0.00	0.00	0.00	0.00	0.00	0.00	0.00	0.95	0.95
24	Equipment/Materials Delivery	Truck	T7 Tractor Con.	D-55	BAK	6	276	0.029065	0.17161	0.384547	0.00	0.004958	0.004744	0.0048	0.0051	1328.601	0.00	0.00	0.00	0.00	0.00	0.00	0.00	0.00	2.20	2.20
24	Equipment/Materials Delivery	Truck	T7 Tractor Con.	D-55	50/50	55	154.2	0.029065	0.17161	0.384547	0.00	0.004958	0.004744	0.0048	0.0051	1328.601	0.00	0.00	0.00	0.00	0.00	0.00	0.00	0.00	11.27	11.28
24	Employees	Auto	LDA	G-55	SM	2,491	32.4	0.00278	0.236396	0.022137	0.00	0.000531	0.000488	0.0647	0.0704	163.2004	0.00	0.02	0.00	0.00	0.00	0.00	0.01	0.01	13.17	14.91
25	Equipment/Materials Delivery	Truck	T7 Tractor Con.	D-55	SM	22	32.4	0.029077	0.171683	0.382769	0.00	0.004961	0.004746	0.0048	0.0051	1328.17	0.00	0.00	0.00	0.00	0.00	0.00	0.00	0.00	0.95	0.95
25	Equipment/Materials Delivery	Truck	T7 Tractor Con.	D-55	BAK	6	276	0.029077	0.171683	0.382769	0.00	0.004961	0.004746	0.0048	0.0051	1328.17	0.00	0.00	0.00	0.00	0.00	0.00	0.00	0.00	2.20	2.20
25	Equipment/Materials Delivery	Truck	T7 Tractor Con.	D-55	50/50	55	154.2	0.029077	0.171683	0.382769	0.00	0.004961	0.004746	0.0048	0.0051	1328.17	0.00	0.00	0.00	0.00	0.00	0.00	0.00	0.00	11.26	11.28
25	Employees	Auto	LDA	G-55	SM	2,444	32.4	0.002756	0.234536	0.021999	0.00	0.000518	0.000477	0.0647	0.0704	162.916	0.00	0.02	0.00	0.00	0.00	0.00	0.01	0.01	12.90	14.61
26	Equipment/Materials Delivery	Truck	T7 Tractor Con.	D-55	SM	22	32.4	0.029091	0.171771	0.38145	0.00	0.004964	0.004749	0.0048	0.0051	1327.826	0.00	0.00	0.00	0.00	0.00	0.00	0.00	0.00	0.95	0.95
26	Equipment/Materials Delivery	Truck	T7 Tractor Con.	D-55	BAK	6	276	0.029091	0.171771	0.38145	0.00	0.004964	0.004749	0.0048	0.0051	1327.826	0.00	0.00	0.00	0.00	0.00	0.00	0.00	0.00	2.20	2.20
26	Equipment/Materials Delivery	Truck	T7 Tractor Con.	D-55	50/50	55	154.2	0.029091	0.171771	0.38145	0.00	0.004964	0.004749	0.0048	0.0051	1327.826	0.00	0.00	0.00	0.00	0.00	0.00	0.00	0.00	11.26	11.27
26	Employees	Auto	LDA	G-55	SM	2,444	32.4	0.002737	0.233009	0.021888	0.00	0.000509	0.000468	0.0647	0.0704	162.6889	0.00	0.02	0.00	0.00	0.00	0.00	0.01	0.01	12.88	14.59
27	Equipment/Materials Delivery	Truck	T7 Tractor Con.	D-55	SM	22	32.4	0.029107	0.171863	0.380462	0.00	0.004967	0.004752	0.0048	0.0051	1327.555	0.00	0.00	0.00	0.00	0.00	0.00	0.00	0.00	0.95	0.95
27	Equipment/Materials Delivery	Truck	T7 Tractor Con.	D-55	BAK	6	276	0.029107	0.171863	0.380462	0.00	0.004967	0.004752	0.0048	0.0051	1327.555	0.00	0.00	0.00	0.00	0.00	0.00	0.00	0.00	2.20	2.20
27	Equipment/Materials Delivery	Truck	T7 Tractor Con.	D-55	50/50	55	154.2	0.029107	0.171863	0.380462	0.00	0.004967	0.004752	0.0048	0.0051	1327.555	0.00	0.00	0.00	0.00	0.00	0.00	0.00	0.00	11.26	11.27
27	Employees	Auto	LDA	G-55	SM	2,444	32.4	0.002723	0.231834	0.0218	0.00	0.000501	0.00046	0.0647	0.0704	162.5115	0.00	0.02	0.00	0.00	0.00	0.00	0.01	0.01	12.87	14.57
28	Equipment/Materials Delivery	Truck	T7 Tractor Con.	D-55	SM	22	32.4	0.02912	0.171946	0.379613	0.00	0.00497	0.004755	0.0048	0.0051	1327.339	0.00	0.00	0.00	0.00	0.00	0.00	0.00	0.00	0.95	0.95
28	Equipment/Materials Delivery	Truck	T7 Tractor Con.	D-55	BAK	6	276	0.02912	0.171946	0.379613	0.00	0.00497	0.004755	0.0048	0.0051	1327.339	0.00	0.00	0.00	0.00	0.00	0.00	0.00	0.00	2.20	2.20
28	Equipment/Materials Delivery	Truck	T7 Tractor Con.	D-55	50/50	55	154.2	0.02912	0.171946	0.379613	0.00	0.00497	0.004755	0.0048	0.0051	1327.339	0.00	0.00	0.00	0.00	0.00	0.00	0.00	0.00	11.26	11.27
28	Employees	Auto	LDA	G-55	SM	2,444	32.4	0.002711	0.230924	0.021728	0.00	0.000495	0.000455	0.0647	0.0704	162.3715	0.00	0.02	0.00	0.00	0.00	0.00	0.01	0.01	12.86	14.56
29	Equipment/Materials Delivery	Truck	T7 Tractor Con.	D-55	SM	22	32.4	0.029131	0.172011	0.378767	0.00	0.004972	0.004757	0.0048	0.0051	1327.124	0.00	0.00	0.00	0.00	0.00	0.00	0.00	0.00	0.95	0.95
29	Equipment/Materials Delivery	Truck	T7 Tractor Con.	D-55	BAK	6	276	0.029131	0.172011	0.378767	0.00	0.004972	0.004757	0.0048	0.0051	1327.124	0.00	0.00	0.00	0.00	0.00	0.00	0.00	0.00	2.20	2.20
29	Equipment/Materials Delivery	Truck	T7 Tractor Con.	D-55	50/50	55	154.2	0.029131	0.172011	0.378767	0.00	0.004972	0.004757	0.0048	0.0051	1327.124	0.00	0.00	0.00	0.00	0.00	0.00	0.00	0.00	11.26	11.27
29	Employees	Auto	LDA	G-55	SM	2,491	32.4	0.002702	0.230237	0.021673	0.00	0.00049	0.000451	0.0647	0.0704	162.259	0.00	0.02	0.00	0.00	0.00	0.00	0.01	0.01	13.10	14.83
30	Equipment/Materials Delivery	Truck	T7 Tractor Con.	D-55	SM	22	32.4	0.029144	0.172087	0.378432	0.00	0.004975	0.00476	0.0048	0.0051	1327.009	0.00	0.00	0.00	0.00	0.00	0.00	0.00	0.00	0.95	0.95
30	Equipment/Materials Delivery	Truck	T7 Tractor Con.	D-55	BAK	6	276	0.029144	0.172087	0.378432	0.00	0.004975	0.00476	0.0048	0.0051	1327.009	0.00	0.00	0.00	0.00	0.00	0.00	0.00	0.00	2.20	2.20
30	Equipment/Materials Delivery	Truck	T7 Tractor Con.	D-55	50/50	55	154.2	0.029144	0.172087	0.378432	0.00	0.004975	0.00476	0.0048	0.0051	1327.009	0.00	0.00	0.00	0.00	0.00	0.00	0.00	0.00	11.25	11.27
30	Employees	Auto	LDA	G-55	SM	2,444	32.4	0.002697	0.229861	0.021649	0.00	0.000487	0.000448	0.0647	0.0704	162.1683	0.00	0.02	0.00	0.00	0.00	0.00	0.01	0.01	12.84	14.55

1. SM=Santa Maria, BAK=Bakersfield, 50/50=50% from Santa Maria and 50% from Bakersfield, RT=Round Trip
2. Emission factors based on EMFAC2014 for Santa Barbara County with an Aggregate Fleet Model year. Except N2O and CH4 emission factors which were based on CCAR General Reporting Protocal v3.1 Table C.4 assuming worst case.
3. Equipment/Material Deliveries and employees counts and origin of trips based on Applicant subminttal.

Drilling Emissions

- Drilling Equipment Emission
- Drilling Fugitive Emission

Drilling Equipment Emission Calculations
Unmitigated

	Emissions (tons/year)						Emissions (MT/year)			
Year	ROC	CO	NOx	SOx	PM10	PM2.5	N2O	CH4	CO2	CO2e
-3	0.00	0.00	0.00	0.00	0.00	0.00	0.00	0.00	0.00	0.00
-2	0.23	1.18	2.51	0.00	0.08	0.08	0.00	0.04	503.78	504.55
-1	3.39	18.12	35.58	0.08	1.11	1.09	0.00	0.55	8,041.03	8,052.62
1	0.00	0.00	0.00	0.00	0.00	0.00	0.00	0.00	0.00	0.00
2	0.07	0.41	0.06	0.00	0.02	0.02	0.00	0.01	187.25	187.51
3	0.07	0.43	0.61	0.00	0.02	0.02	0.00	0.01	200.52	200.80
4	0.07	0.43	0.54	0.00	0.02	0.02	0.00	0.01	200.53	200.81
5	2.70	18.05	20.43	0.08	0.64	0.63	0.00	0.52	8,515.76	8,526.73
6	0.11	0.79	0.80	0.00	0.02	0.02	0.00	0.02	374.61	375.09
7	0.43	3.02	3.04	0.01	0.09	0.09	0.00	0.09	1,431.46	1,433.31
8	0.17	1.22	1.23	0.01	0.04	0.04	0.00	0.04	575.15	575.90
9	0.15	1.03	1.04	0.00	0.03	0.03	0.00	0.04	488.12	488.76
10	0.40	2.77	2.79	0.01	0.09	0.08	0.00	0.08	1,314.34	1,316.04
11	0.52	4.12	1.98	0.02	0.06	0.06	0.00	0.04	2,104.25	2,105.08
12	0.35	2.81	1.35	0.01	0.04	0.04	0.00	0.03	1,436.08	1,436.65
13	0.39	3.07	1.48	0.02	0.05	0.05	0.00	0.03	1,569.80	1,570.42
14	0.13	1.01	0.48	0.01	0.02	0.02	0.00	0.01	513.69	513.89
15	0.44	3.48	1.67	0.02	0.05	0.05	0.00	0.03	1,775.53	1,776.23
16	0.88	7.53	2.55	0.04	0.08	0.08	0.00	0.07	3,852.24	3,853.63
17	0.16	1.41	0.48	0.01	0.02	0.02	0.00	0.01	720.05	720.31
18	0.16	1.41	0.48	0.01	0.02	0.02	0.00	0.01	720.05	720.31
19	0.16	1.41	0.48	0.01	0.02	0.02	0.00	0.01	720.05	720.31
20	0.16	1.41	0.48	0.01	0.02	0.02	0.00	0.01	720.05	720.31
21	0.16	1.41	0.41	0.01	0.01	0.01	0.00	0.01	720.05	720.31
22	0.16	1.41	0.41	0.01	0.01	0.01	0.00	0.01	720.05	720.31
23	0.16	1.41	0.41	0.01	0.01	0.01	0.00	0.01	720.05	720.31
24	0.16	1.41	0.41	0.01	0.01	0.01	0.00	0.01	720.05	720.31
25	0.16	1.41	0.41	0.01	0.01	0.01	0.00	0.01	720.05	720.31
26	0.16	1.41	0.41	0.01	0.01	0.01	0.00	0.01	720.05	720.31
27	0.16	1.41	0.41	0.01	0.01	0.01	0.00	0.01	720.05	720.31
28	0.16	1.41	0.41	0.01	0.01	0.01	0.00	0.01	720.05	720.31
29	0.16	1.41	0.41	0.01	0.01	0.01	0.00	0.01	720.05	720.31
30	0.16	1.41	0.41	0.01	0.01	0.01	0.00	0.01	720.05	720.31

1. Emissions calculated using the CalEEMod v2013.2.2 Program
2. Equipment size and use based on Applicant submittal
3. Total Equipment operating hours per month and year were provided by the Applicant submittal.
4. Annual hours were divided by annual working days to obtain hours per day per piece of equipment. If hours/day exceeded 24 hours then 2 pieces were assumed etc.
5. Off-site vehicle emissions are included in the offsite calculations because they are certified for on-road use.

Drilling Equipment Emission Calculations
Mitigated - Tier 4 Engines

	Emissions (tons/year)						Emissions (MT/year)			
Year	ROC	CO	NOx	SOx	PM10	PM2.5	N2O	CH4	CO2	CO2e
-3	0.00	0.00	0.00	0.00	0.00	0.00	0.00	0.00	0.00	0.00
-2	0.06	2.21	0.27	0.00	0.01	0.01	0.00	0.04	503.78	504.54
-1	0.96	35.26	4.34	0.08	0.13	0.13	0.00	0.55	8,041.02	8,052.61
1	0.00	0.00	0.00	0.00	0.00	0.00	0.00	0.00	0.00	0.00
2	0.02	0.82	0.10	0.00	0.00	0.00	0.00	0.01	187.25	187.51
3	0.02	0.88	0.11	0.00	0.00	0.00	0.00	0.01	200.52	200.80
4	0.02	0.88	0.11	0.00	0.00	0.00	0.00	0.01	200.53	200.81
5	1.02	37.43	4.60	0.08	0.14	0.14	0.00	0.52	8,525.75	8,526.72
6	0.04	1.65	0.20	0.00	0.01	0.01	0.00	0.02	374.61	375.09
7	0.17	6.29	0.77	0.01	0.02	0.02	0.00	0.09	1,431.46	1,433.30
8	0.07	2.53	0.31	0.01	0.01	0.01	0.00	0.04	575.15	575.90
9	0.06	2.15	0.26	0.00	0.01	0.01	0.00	0.03	488.12	488.76
10	0.16	5.78	0.71	0.01	0.02	0.02	0.00	0.08	1,314.34	1,316.04
11	0.25	9.03	1.11	0.02	0.03	0.03	0.00	0.04	2,104.25	2,105.08
12	0.17	6.16	0.76	0.01	0.02	0.02	0.00	0.03	1,436.08	1,436.64
13	0.18	6.74	0.83	0.02	0.02	0.02	0.00	0.03	1,569.80	1,570.42
14	0.06	2.20	0.27	0.01	0.01	0.01	0.00	0.01	513.69	513.89
15	0.21	7.62	0.94	0.02	0.03	0.03	0.00	0.03	1,775.53	1,776.23
16	0.45	16.52	2.02	0.04	0.06	0.06	0.00	0.07	3,852.23	3,853.62
17	0.08	3.09	0.38	0.01	0.01	0.01	0.00	0.01	720.05	720.31
18	0.08	3.09	0.38	0.01	0.01	0.01	0.00	0.01	720.05	720.31
19	0.08	3.09	0.38	0.01	0.01	0.01	0.00	0.01	720.05	720.31
20	0.08	3.09	0.38	0.01	0.01	0.01	0.00	0.01	720.05	720.31
21	0.08	3.09	0.38	0.01	0.01	0.01	0.00	0.01	720.05	720.31
22	0.08	3.09	0.38	0.01	0.01	0.01	0.00	0.01	720.05	720.31
23	0.08	3.09	0.38	0.01	0.01	0.01	0.00	0.01	720.05	720.31
24	0.08	3.09	0.38	0.01	0.01	0.01	0.00	0.01	720.05	720.31
25	0.08	3.09	0.38	0.01	0.01	0.01	0.00	0.01	720.05	720.31
26	0.08	3.09	0.38	0.01	0.01	0.01	0.00	0.01	720.05	720.31
27	0.08	3.09	0.38	0.01	0.01	0.01	0.00	0.01	720.05	720.31
28	0.08	3.09	0.38	0.01	0.01	0.01	0.00	0.01	720.05	720.31
29	0.08	3.09	0.38	0.01	0.01	0.01	0.00	0.01	720.05	720.31
30	0.08	3.09	0.38	0.01	0.01	0.01	0.00	0.01	720.05	720.31

1. Emissions calculated using the CalEEMod v2013.2.2 Program
2. Equipment size and use based on Applicant submittal
3. Total Equipment operating hours per month and year were provided by the Applicant submittal.
4. Annual hours were divided by annual working days to obtain hours per day per piece of equipment. If hours/day exceeded 24 hours then 2 pieces were assumed etc.
5. Off-site vehicle emissions are included in the offsite calculations because they are certified for on-road use.
6. Tier 4 Final equipment was used to mitigate the drilling emissions.

Drilling Fugitive Dust Emission Calculations
Unmitigated **Unpaved Milage per RT: 0.6**

Year	Activity/Source	Average Source		Emissions Factor	Tons/Year PM10	Tons/Year PM2.5
-2	Unpaved Roads Autos	1466.4	miles/year	CalEEMod	0.970	0.097
-2	Unpaved Roads Trucks	36.6	miles/year	CalEEMod	0.025	0.002
-1	Unpaved Roads Autos	8826.6	miles/year	CalEEMod	5.838	0.583
-1	Unpaved Roads Trucks	619.2	miles/year	CalEEMod	0.410	0.041
2	Unpaved Roads Autos	733.2	miles/year	CalEEMod	0.485	0.048
2	Unpaved Roads Trucks	13.8	miles/year	CalEEMod	0.009	0.001
3	Unpaved Roads Autos	733.2	miles/year	CalEEMod	0.485	0.048
3	Unpaved Roads Trucks	13.8	miles/year	CalEEMod	0.009	0.001
4	Unpaved Roads Autos	733.2	miles/year	CalEEMod	0.485	0.048
4	Unpaved Roads Trucks	13.8	miles/year	CalEEMod	0.009	0.001
5	Unpaved Roads Autos	8854.8	miles/year	CalEEMod	5.856	0.585
5	Unpaved Roads Trucks	643.2	miles/year	CalEEMod	0.424	0.042
6	Unpaved Roads Autos	1494.6	miles/year	CalEEMod	0.989	0.099
6	Unpaved Roads Trucks	28.8	miles/year	CalEEMod	0.019	0.002
7	Unpaved Roads Autos	3722.4	miles/year	CalEEMod	2.462	0.246
7	Unpaved Roads Trucks	108	miles/year	CalEEMod	0.073	0.007
8	Unpaved Roads Autos	1466.4	miles/year	CalEEMod	0.970	0.097
8	Unpaved Roads Trucks	42.6	miles/year	CalEEMod	0.029	0.003
9	Unpaved Roads Autos	1466.4	miles/year	CalEEMod	0.970	0.097
9	Unpaved Roads Trucks	36.6	miles/year	CalEEMod	0.025	0.002
10	Unpaved Roads Autos	2961	miles/year	CalEEMod	1.958	0.196
10	Unpaved Roads Trucks	99	miles/year	CalEEMod	0.067	0.007
11	Unpaved Roads Autos	4455.6	miles/year	CalEEMod	2.947	0.294
11	Unpaved Roads Trucks	151.8	miles/year	CalEEMod	0.100	0.010
12	Unpaved Roads Autos	2989.2	miles/year	CalEEMod	1.977	0.197
12	Unpaved Roads Trucks	103.2	miles/year	CalEEMod	0.067	0.007
13	Unpaved Roads Autos	3666	miles/year	CalEEMod	2.425	0.242
13	Unpaved Roads Trucks	112.2	miles/year	CalEEMod	0.072	0.007
14	Unpaved Roads Autos	1466.4	miles/year	CalEEMod	0.970	0.097
14	Unpaved Roads Trucks	36.6	miles/year	CalEEMod	0.025	0.002
15	Unpaved Roads Autos	3694.2	miles/year	CalEEMod	2.443	0.244
15	Unpaved Roads Trucks	126	miles/year	CalEEMod	0.083	0.008
16	Unpaved Roads Autos	8093.4	miles/year	CalEEMod	5.353	0.534
16	Unpaved Roads Trucks	252	miles/year	CalEEMod	0.171	0.017
17	Unpaved Roads Autos	1494.6	miles/year	CalEEMod	0.988	0.099
17	Unpaved Roads Trucks	49.8	miles/year	CalEEMod	0.034	0.003
18	Unpaved Roads Autos	1494.6	miles/year	CalEEMod	0.988	0.099
18	Unpaved Roads Trucks	49.8	miles/year	CalEEMod	0.034	0.003
19	Unpaved Roads Autos	1466.4	miles/year	CalEEMod	0.970	0.097
19	Unpaved Roads Trucks	49.8	miles/year	CalEEMod	0.033	0.003
20	Unpaved Roads Autos	1438.2	miles/year	CalEEMod	0.951	0.095
20	Unpaved Roads Trucks	49.8	miles/year	CalEEMod	0.032	0.003
21	Unpaved Roads Autos	1466.4	miles/year	CalEEMod	0.970	0.097
21	Unpaved Roads Trucks	49.8	miles/year	CalEEMod	0.033	0.003
22	Unpaved Roads Autos	1466.4	miles/year	CalEEMod	0.970	0.097
22	Unpaved Roads Trucks	49.8	miles/year	CalEEMod	0.033	0.003
23	Unpaved Roads Autos	1494.6	miles/year	CalEEMod	0.988	0.099
23	Unpaved Roads Trucks	49.8	miles/year	CalEEMod	0.034	0.003
24	Unpaved Roads Autos	1494.6	miles/year	CalEEMod	0.988	0.099
24	Unpaved Roads Trucks	49.8	miles/year	CalEEMod	0.034	0.003
25	Unpaved Roads Autos	1466.4	miles/year	CalEEMod	0.970	0.097
25	Unpaved Roads Trucks	49.8	miles/year	CalEEMod	0.033	0.003
26	Unpaved Roads Autos	1466.4	miles/year	CalEEMod	0.970	0.097
26	Unpaved Roads Trucks	49.8	miles/year	CalEEMod	0.033	0.003
27	Unpaved Roads Autos	1466.4	miles/year	CalEEMod	0.970	0.097
27	Unpaved Roads Trucks	49.8	miles/year	CalEEMod	0.033	0.003
28	Unpaved Roads Autos	1466.4	miles/year	CalEEMod	0.970	0.097
28	Unpaved Roads Trucks	49.8	miles/year	CalEEMod	0.033	0.003
29	Unpaved Roads Autos	1494.6	miles/year	CalEEMod	0.988	0.099
29	Unpaved Roads Trucks	49.8	miles/year	CalEEMod	0.034	0.003
30	Unpaved Roads Autos	1466.4	miles/year	CalEEMod	0.970	0.097
30	Unpaved Roads Trucks	49.8	miles/year	CalEEMod	0.033	0.003

1. Unpaved road traveled emissions were calculated using CelEEMod which used the following methodology.

$EF = \{[[k \times (s/12)^1 \times (S/30)^{0.5}]/[(M/0.5)^{0.2}]]-C\} \times [1 - (P/365)]$

Where,
EF = emission factor
k = particle size multiplier
s = surface material silt content (%)
M = surface material moisture content (%)
S = mean vehicle speed (mph)
C = emissions factor for 1980's vehicle fleet exhaust, brake wear and tire wear
P = number of days in a year with at least 0.254 mm of precipitation
Then,
E = EF x VMT
Where,
E = emissions
EF = emission factor
VMT = unpaved vehicle miles traveld

Drilling Fugitive Dust Emission Calculations
Mitigated

Year	Activity/Source	Average Source	Source Units	Emissions Factor	Tons/Year PM10	Tons/Year PM2.5
-2	Unpaved Roads Autos	1466.4	miles/year	CalEEMod	0.232	0.023
-2	Unpaved Roads Trucks	36.6	miles/year	CalEEMod	0.006	0.001
-1	Unpaved Roads Autos	8826.6	miles/year	CalEEMod	1.394	0.139
-1	Unpaved Roads Trucks	619.2	miles/year	CalEEMod	0.098	0.010
2	Unpaved Roads Autos	733.2	miles/year	CalEEMod	0.116	0.012
2	Unpaved Roads Trucks	13.8	miles/year	CalEEMod	0.002	0.000
3	Unpaved Roads Autos	733.2	miles/year	CalEEMod	0.116	0.012
3	Unpaved Roads Trucks	13.8	miles/year	CalEEMod	0.002	0.000
4	Unpaved Roads Autos	733.2	miles/year	CalEEMod	0.116	0.012
4	Unpaved Roads Trucks	13.8	miles/year	CalEEMod	0.002	0.000
5	Unpaved Roads Autos	8854.8	miles/year	CalEEMod	1.398	0.139
5	Unpaved Roads Trucks	643.2	miles/year	CalEEMod	0.101	0.010
6	Unpaved Roads Autos	1494.6	miles/year	CalEEMod	0.236	0.024
6	Unpaved Roads Trucks	28.8	miles/year	CalEEMod	0.005	0.000
7	Unpaved Roads Autos	3722.4	miles/year	CalEEMod	0.588	0.059
7	Unpaved Roads Trucks	108	miles/year	CalEEMod	0.018	0.002
8	Unpaved Roads Autos	1466.4	miles/year	CalEEMod	0.232	0.023
8	Unpaved Roads Trucks	42.6	miles/year	CalEEMod	0.007	0.001
9	Unpaved Roads Autos	1466.4	miles/year	CalEEMod	0.232	0.023
9	Unpaved Roads Trucks	36.6	miles/year	CalEEMod	0.006	0.001
10	Unpaved Roads Autos	2961	miles/year	CalEEMod	0.468	0.047
10	Unpaved Roads Trucks	99	miles/year	CalEEMod	0.016	0.002
11	Unpaved Roads Autos	4455.6	miles/year	CalEEMod	0.704	0.070
11	Unpaved Roads Trucks	151.8	miles/year	CalEEMod	0.024	0.002
12	Unpaved Roads Autos	2989.2	miles/year	CalEEMod	0.472	0.047
12	Unpaved Roads Trucks	103.2	miles/year	CalEEMod	0.016	0.002
13	Unpaved Roads Autos	3666	miles/year	CalEEMod	0.579	0.058
13	Unpaved Roads Trucks	112.2	miles/year	CalEEMod	0.017	0.002
14	Unpaved Roads Autos	1466.4	miles/year	CalEEMod	0.232	0.023
14	Unpaved Roads Trucks	36.6	miles/year	CalEEMod	0.006	0.001
15	Unpaved Roads Autos	3694.2	miles/year	CalEEMod	0.583	0.058
15	Unpaved Roads Trucks	126	miles/year	CalEEMod	0.020	0.002
16	Unpaved Roads Autos	8093.4	miles/year	CalEEMod	1.278	0.127
16	Unpaved Roads Trucks	252	miles/year	CalEEMod	0.041	0.004
17	Unpaved Roads Autos	1494.6	miles/year	CalEEMod	0.236	0.024
17	Unpaved Roads Trucks	49.8	miles/year	CalEEMod	0.008	0.001
18	Unpaved Roads Autos	1494.6	miles/year	CalEEMod	0.236	0.024
18	Unpaved Roads Trucks	49.8	miles/year	CalEEMod	0.008	0.001
19	Unpaved Roads Autos	1466.4	miles/year	CalEEMod	0.232	0.023
19	Unpaved Roads Trucks	49.8	miles/year	CalEEMod	0.008	0.001
20	Unpaved Roads Autos	1438.2	miles/year	CalEEMod	0.227	0.023
20	Unpaved Roads Trucks	49.8	miles/year	CalEEMod	0.008	0.001
21	Unpaved Roads Autos	1466.4	miles/year	CalEEMod	0.232	0.023
21	Unpaved Roads Trucks	49.8	miles/year	CalEEMod	0.008	0.001
22	Unpaved Roads Autos	1466.4	miles/year	CalEEMod	0.232	0.023
22	Unpaved Roads Trucks	49.8	miles/year	CalEEMod	0.008	0.001
23	Unpaved Roads Autos	1494.6	miles/year	CalEEMod	0.236	0.024
23	Unpaved Roads Trucks	49.8	miles/year	CalEEMod	0.008	0.001
24	Unpaved Roads Autos	1494.6	miles/year	CalEEMod	0.236	0.024
24	Unpaved Roads Trucks	49.8	miles/year	CalEEMod	0.008	0.001
25	Unpaved Roads Autos	1466.4	miles/year	CalEEMod	0.232	0.023
25	Unpaved Roads Trucks	49.8	miles/year	CalEEMod	0.008	0.001
26	Unpaved Roads Autos	1466.4	miles/year	CalEEMod	0.232	0.023
26	Unpaved Roads Trucks	49.8	miles/year	CalEEMod	0.008	0.001
27	Unpaved Roads Autos	1466.4	miles/year	CalEEMod	0.232	0.023
27	Unpaved Roads Trucks	49.8	miles/year	CalEEMod	0.008	0.001
28	Unpaved Roads Autos	1466.4	miles/year	CalEEMod	0.232	0.023
28	Unpaved Roads Trucks	49.8	miles/year	CalEEMod	0.008	0.001
29	Unpaved Roads Autos	1494.6	miles/year	CalEEMod	0.236	0.024
29	Unpaved Roads Trucks	49.8	miles/year	CalEEMod	0.008	0.001
30	Unpaved Roads Autos	1466.4	miles/year	CalEEMod	0.232	0.023
30	Unpaved Roads Trucks	49.8	miles/year	CalEEMod	0.008	0.001

1. Unpaved road traveled emissions were calculated using CelEEMod which used the following methodology.

$EF = \{[[k \times (s/12)^1 \times (S/30)^{0.5}]/[(M/0.5)^{0.2}]]-C\} \times [1 - (P/365)]$

Where,
EF = emission factor
k = particle size multiplier
s = surface material silt content (%)
M = surface material moisture content (%)
S = mean vehicle speed (mph)
C = emissions factor for 1980's vehicle fleet exhaust, brake wear and tire wear
P = number of days in a year with at least 0.254 mm of precipitation
Then,
E = EF x VMT
Where,
E = emissions
EF = emission factor
VMT = unpaved vehicle miles traveld

4. Mitigation selected in CalEEMod were watering 3 times per day and reduce vehicle speed to less than 15 mph.
5. CalEEMod does not give mitigation credit for water to unpaved road travel since the model thinks it is offsite travel so a 61% additional reduction was taken manually to acount for the onsite unpaved roads being watered 3 times daily.

Non-Stationary Source Operational Emissions

- Trip Generation Day to Day Operations
- Tanker Trips and Mileage
- Operating Mobile Emissions Excluding Tankers
- Operating Tankers Emissions
- Operational Fugitive Dust Emissions

EAST CAT CANYON OIL FIELD REDEVELOPMENT PROJECT Max Year 2029

(Provided by AERA)

TRIP GENERATION _ DAY-TO-DAY OPERATIONS (non-construction periods)

				AM Peak		PM Peak	
Project Component	Number/Day	Shift	ADT	In	Out	In	Out
EMPLOYEES							
9/80 Employees (a)	79	6:30 AM - 4:15 PM	237	0	0	0	79
12 hr. Employees (b)	26	6:00 AM/PM - 6:00 PM/AM	78	0	0	0	0
TRUCKS							
Miscellaneous Truck Deliveries (e)	5	NA	10	0	1	1	0
Crude Import/Export via Truck (d)	99	NA	199	4	4	4	4
MISCELLANEOUS TRIPS (c)	4	NA	8	0	1	1	0

(a) 9/80 workers. Shift starts at 6:30 A.M. and ends at 4:15 P.M. ADT assumes 50% of employee leave site for lunch break.
(b) 12 hour shift workers. Shifts = 6:00 A.M. to 6:00 P.M.; and 6:00 P.M. to 6:00 A.M. ADT assumes 50% of employees leave site for lunch break.
(c) Chemical, sand, and other deliveries via trucks. ADT assumes one inbound + one outbound trip per delivery.
A.M. and P.M. peak hour trips assume 10% of trips during each peak hour period.
(d) Crude export via trucks = 2/hr = 48 per day. ADT assumes one inbound + one outbound trip per delivery.
A.M. and P.M. peak hour trips assume 2 trips during each peak hour period.
(e) Miscellaneous trips including visitors, fed-ex, other support materials and staff for drilling operations not accounted for in Trucks category.
ADT assumes one inbound + one outbound trip per delivery. A.M. and P.M. peak hour trips assume 10% of trips during each peak hour period.

EAST CAT CANYON OIL FIELD REDEVELOPMENT PROJECT

Tankering Trips and Mileage (Provided by AERA)

	Export API: 12			Light Oil In [1]			Crude Oil Out [2]					Light Oil		Export Oil		Total
												23	46	76	153	99
Year	Oil Production	Light Oil Mix Rate	Required Light Oil for API 12			Total Oil Production						Max	Max	Max	Max	Max
	BPD		BPD	Truck Miles	Max Trucks	BPD	Truck Miles	Max Trucks	Truck Miles	Total ADT		Trucks	ADT	Trucks	ADT	Total Trucks
2019	2,913	0.225	656	709	5	3,569	6,361	22	7,070	53.3		5	10	22	44	27.0
2020	4,044	0.225	910	984	7	4,953	8,829	31	9,813	74.0		6	12	31	61	36.5
2021	4,379	0.309	1,353	1,463	10	5,733	10,002	34	11,465	86.7		10	20	34	67	43.7
2022	4,422	0.309	1,366	1,477	10	5,788	10,100	35	11,577	87.6		10	20	35	68	44.0
2023	4,625	0.309	1,429	1,545	11	6,055	10,564	36	12,109	91.6		10	20	36	71	45.6
2024	7,171	0.309	2,216	2,396	16	9,387	16,379	56	18,775	142.0		16	32	56	110	71.2
2025	8,297	0.317	2,630	2,843	19	10,927	19,029	64	21,872	165.5		19	38	64	128	83.0
2026	9,013	0.317	2,857	3,089	21	11,870	20,672	70	23,761	179.8		20	40	70	139	89.5
2027	9,194	0.324	2,979	3,220	22	12,173	21,164	71	24,384	184.5		21	42	71	142	92.0
2028	9,769	0.324	3,165	3,422	23	12,935	22,488	76	25,910	196.1		23	46	76	151	98.4
2029	9,883	0.332	3,281	3,547	24	13,164	22,845	77	26,392	199.8		23	46	77	153	99.5
2030	9,745	0.332	3,235	3,498	24	12,980	22,526	76	26,023	197.0		23	46	76	151	98.4
2031	9,222	0.332	3,062	3,310	22	12,283	21,316	72	24,625	186.4		22	44	72	143	93.3
2032	8,976	0.332	2,980	3,222	22	11,957	20,749	70	23,971	181.5		21	42	70	139	90.4
2033	9,011	0.332	2,992	3,234	22	12,003	20,829	70	24,063	182.2		21	42	70	139	90.7
2034	8,999	0.332	2,988	3,230	22	11,987	20,802	70	24,032	181.9		21	42	70	139	90.6
2035	9,041	0.332	3,001	3,245	22	12,042	20,897	70	24,142	182.7		21	42	70	140	90.9
2036	9,265	0.332	3,076	3,325	22	12,341	21,415	72	24,741	187.3		22	44	72	143	93.7
2037	9,149	0.332	3,037	3,284	22	12,187	21,148	71	24,432	184.9		22	44	71	142	92.8
2038	8,735	0.332	2,900	3,135	21	11,634	20,190	68	23,325	176.6		21	42	68	135	88.6
2039	8,464	0.332	2,810	3,038	21	11,273	19,564	66	22,601	171.1		20	40	66	131	85.5
2040	8,196	0.332	2,721	2,942	20	10,917	18,946	64	21,888	165.7		19	38	64	127	82.4
2041	7,965	0.332	2,644	2,859	19	10,609	18,411	62	21,269	161.0		19	38	62	123	80.6
2042	7,737	0.332	2,569	2,777	19	10,306	17,885	60	20,662	156.4		18	36	60	120	77.9
2043	7,441	0.332	2,471	2,671	18	9,912	17,201	58	19,871	150.4		18	36	58	115	75.6
2044	7,202	0.332	2,391	2,585	18	9,593	16,647	56	19,232	145.6		17	34	56	111	72.7
2045	6,985	0.332	2,319	2,507	17	9,304	16,146	55	18,653	141.2		17	34	55	108	71.0
2046	6,727	0.332	2,233	2,414	16	8,960	15,549	53	17,964	136.0		16	32	53	104	68.0
2047	6,476	0.332	2,150	2,324	16	8,626	14,969	51	17,293	130.9		15	30	51	100	65.1
2048	6,187	0.332	2,054	2,221	15	8,242	14,302	48	16,523	125.1		15	30	48	96	62.9
2049	5,298	0.332	1,759	1,902	13	7,057	12,246	41	14,148	107.1		13	26	41	82	54.0
2050	5,066	0.332	1,682	1,818	13	6,748	11,710	40	13,528	102.4		12	24	40	78	51.2

Note:

1. Light Oil Truck Miles Traveled is based on a worst case scenario where Trucks will come form various locations with miles per truck ranging from 140 miles to 151 miles per truck with an average of 147 miles per truck. Most likely scenario has all light oil coming from Belridge which would be less miles than these estimates.

2. Crude Oil Truck Miles include both one-way trips (using trucks that imported light oil) and round trips (trucks will deliver oil and return empty). These will have an estimated average trip distance of 295 to 296 miles per truck (varies per year depending on the number of one-way trips included in estimates).

Operating Mobile Emissions Excluding Tankers

Vehicle Fleet Mix Aggregate

								Daily Emissions									Annual Emissions								
Process	Calendar Year	Vehicle Class	Model Year	Max Daily Trips	# Trips per Year	Annual miles	Daily Miles	ROC (lbs/day)	CO (lbs/day)	NOX (lbs/day)	PM10 (lbs/day)	PM2.5 (lbs/day)	SOX (lbs/day)	CO2 (lbs/day)	N2O (lbs/day)	CH4 (lbs/day)	ROC (tons/yr)	CO (tons/yr)	NOX (tons/yr)	PM10 (tons/yr)	PM2.5 (tons/yr)	SOX (tons/yr)	CO2 (tonne/yr)	N2O (tonne/yr)	CH4 (tonne/yr)
Miscellaneous Trips	2019	T7 Single	Aggregate	3	402	236,341	1,764	0.64	2.57	24.95	0.61	0.36	0.06	6515.55	0.02	0.02	0.04	0.17	1.67	0.04	0.02	0.00	396.08	0.00	0.00
Miscellaneous Truck Deliveries**	2019	T7 Single	Aggregate	10	1134	98,545	869	0.31	1.27	12.29	0.30	0.18	0.03	3209.76	0.01	0.01	0.02	0.07	0.70	0.02	0.01	0.00	165.15	0.00	0.00
12 Hr. Employees**	2019	LDT1	Aggregate	78	28470	461,214	1,264	0.11	4.25	0.48	0.13	0.05	0.01	873.19	0.03	0.04	0.02	0.78	0.09	0.02	0.01	0.00	144.61	0.00	0.01
9/80 Employees**	2019	LDT1	Aggregate	237	86505	1,401,381	3,839	0.33	12.92	1.47	0.40	0.17	0.03	2653.15	0.09	0.13	0.06	2.36	0.27	0.07	0.03	0.00	439.38	0.01	0.02
							Total	**1.39**	**21.01**	**39.19**	**1.44**	**0.76**	**0.13**	**13251.65**	**0.14**	**0.21**	**0.14**	**3.38**	**2.72**	**0.15**	**0.07**	**0.01**	**1145.22**	**0.02**	**0.03**
Miscellaneous Trips	2020	T7 Single	Aggregate	5	543	322,608	2,970	0.75	3.17	36.14	0.84	0.42	0.10	10859.57	0.03	0.03	0.04	0.17	1.96	0.05	0.02	0.01	535.20	0.00	0.00
Miscellaneous Truck Deliveries**	2020	T7 Single	Aggregate	10	1134	98,545	869	0.22	0.93	10.57	0.25	0.12	0.03	3177.43	0.01	0.01	0.01	0.06	0.60	0.01	0.01	0.00	163.48	0.00	0.00
12 Hr. Employees**	2020	LDT1	Aggregate	78	28470	461,214	1,264	0.08	3.58	0.42	0.13	0.05	0.01	847.71	0.03	0.04	0.01	0.65	0.08	0.02	0.01	0.00	140.39	0.00	0.01
9/80 Employees**	2020	LDT1	Aggregate	237	86505	1,401,381	3,839	0.24	10.89	1.28	0.40	0.17	0.03	2575.75	0.09	0.13	0.04	1.99	0.23	0.07	0.03	0.00	426.56	0.01	0.02
							Total	**1.30**	**18.57**	**48.40**	**1.61**	**0.77**	**0.17**	**17460.46**	**0.15**	**0.22**	**0.11**	**2.87**	**2.87**	**0.16**	**0.07**	**0.01**	**1265.64**	**0.02**	**0.03**
Miscellaneous Trips	2021	T7 Single	Aggregate	5	573	350,134	3,055	0.74	3.19	33.05	0.84	0.41	0.11	11051.33	0.03	0.03	0.04	0.18	1.89	0.05	0.02	0.01	574.68	0.00	0.00
Miscellaneous Truck Deliveries**	2021	T7 Single	Aggregate	10	1134	98,545	869	0.21	0.91	9.40	0.24	0.12	0.03	3143.57	0.01	0.01	0.01	0.05	0.53	0.01	0.01	0.00	161.74	0.00	0.00
12 Hr. Employees**	2021	LDT1	Aggregate	78	28470	461,214	1,264	0.07	3.22	0.38	0.13	0.05	0.01	818.99	0.03	0.04	0.01	0.59	0.07	0.02	0.01	0.00	135.63	0.00	0.01
9/80 Employees**	2021	LDT1	Aggregate	237	86505	1,401,381	3,839	0.22	9.77	1.14	0.40	0.17	0.03	2488.46	0.09	0.13	0.04	1.78	0.21	0.07	0.03	0.00	412.11	0.01	0.02
							Total	**1.24**	**17.09**	**43.97**	**1.60**	**0.75**	**0.17**	**17502.35**	**0.16**	**0.22**	**0.11**	**2.61**	**2.70**	**0.16**	**0.07**	**0.01**	**1284.16**	**0.02**	**0.03**
Miscellaneous Trips	2022	T7 Single	Aggregate	5	574	350,471	3,050	0.71	3.13	29.20	0.81	0.39	0.10	10905.46	0.03	0.03	0.04	0.18	1.68	0.05	0.02	0.01	568.57	0.00	0.00
Miscellaneous Truck Deliveries**	2022	T7 Single	Aggregate	10	1134	98,545	869	0.20	0.89	8.32	0.23	0.11	0.03	3107.16	0.01	0.01	0.01	0.05	0.47	0.01	0.01	0.00	159.87	0.00	0.00
12 Hr. Employees**	2022	LDT1	Aggregate	78	28470	461,214	1,264	0.06	2.89	0.34	0.13	0.05	0.01	789.11	0.03	0.04	0.01	0.53	0.06	0.02	0.01	0.00	130.68	0.00	0.01
9/80 Employees**	2022	LDT1	Aggregate	237	86505	1,401,381	3,839	0.19	8.79	1.02	0.39	0.16	0.02	2397.69	0.09	0.13	0.03	1.60	0.19	0.07	0.03	0.00	397.08	0.01	0.02
							Total	**1.16**	**15.70**	**38.88**	**1.57**	**0.72**	**0.17**	**17139.42**	**0.16**	**0.22**	**0.10**	**2.36**	**2.40**	**0.16**	**0.07**	**0.01**	**1256.20**	**0.02**	**0.03**
Miscellaneous Trips	2023	T7 Single	Aggregate	5	578	351,779	3,045	0.55	2.83	19.45	0.76	0.33	0.10	10611.15	0.03	0.03	0.03	0.16	1.12	0.04	0.02	0.01	556.20	0.00	0.00
Miscellaneous Truck Deliveries**	2023	T7 Single	Aggregate	10	1134	98,545	869	0.16	0.81	5.55	0.22	0.10	0.03	3028.27	0.01	0.01	0.01	0.05	0.31	0.01	0.01	0.00	155.81	0.00	0.00
12 Hr. Employees**	2023	LDT1	Aggregate	78	28470	461,214	1,264	0.06	2.61	0.30	0.13	0.05	0.01	758.21	0.03	0.04	0.01	0.48	0.06	0.02	0.01	0.00	125.57	0.00	0.01
9/80 Employees**	2023	LDT1	Aggregate	237	86505	1,401,381	3,839	0.17	7.94	0.92	0.39	0.16	0.02	2303.80	0.09	0.13	0.03	1.45	0.17	0.07	0.03	0.00	381.53	0.01	0.02
							Total	**0.92**	**14.20**	**26.22**	**1.50**	**0.65**	**0.16**	**16701.44**	**0.16**	**0.22**	**0.08**	**2.14**	**1.66**	**0.15**	**0.06**	**0.01**	**1219.11**	**0.02**	**0.03**
Miscellaneous Trips	2024	T7 Single	Aggregate	6	709	287,528	2,430	0.43	2.24	14.21	0.59	0.26	0.08	8409.09	0.03	0.03	0.03	0.13	0.84	0.04	0.02	0.00	451.45	0.00	0.00
Miscellaneous Truck Deliveries**	2024	T7 Single	Aggregate	10	1134	98,545	869	0.15	0.80	5.08	0.21	0.09	0.03	3007.20	0.01	0.01	0.01	0.05	0.29	0.01	0.01	0.00	154.73	0.00	0.00
12 Hr. Employees**	2024	LDT1	Aggregate	78	28470	461,214	1,264	0.05	2.37	0.27	0.13	0.05	0.01	726.87	0.03	0.04	0.01	0.43	0.05	0.02	0.01	0.00	120.38	0.00	0.01
9/80 Employees**	2024	LDT1	Aggregate	237	86505	1,401,381	3,839	0.15	7.21	0.82	0.39	0.16	0.02	2208.58	0.09	0.13	0.03	1.32	0.15	0.07	0.03	0.00	365.76	0.01	0.02
							Total	**0.78**	**12.63**	**20.39**	**1.33**	**0.57**	**0.14**	**14351.74**	**0.15**	**0.21**	**0.07**	**1.93**	**1.33**	**0.14**	**0.06**	**0.01**	**1092.31**	**0.02**	**0.03**
Miscellaneous Trips	2025	T7 Single	Aggregate	7	778	313,542	2,821	0.48	2.59	15.21	0.68	0.29	0.09	9702.06	0.03	0.03	0.03	0.14	0.85	0.04	0.02	0.01	489.27	0.00	0.00
Miscellaneous Truck Deliveries**	2025	T7 Single	Aggregate	10	1134	98,545	869	0.15	0.80	4.69	0.21	0.09	0.03	2988.69	0.01	0.01	0.01	0.05	0.27	0.01	0.01	0.00	153.77	0.00	0.00
12 Hr. Employees**	2025	LDT1	Aggregate	78	28470	461,214	1,264	0.04	2.14	0.24	0.13	0.05	0.01	695.76	0.03	0.04	0.01	0.39	0.04	0.02	0.01	0.00	115.22	0.00	0.01
9/80 Employees**	2025	LDT1	Aggregate	237	86505	1,401,381	3,839	0.13	6.51	0.74	0.39	0.16	0.02	2114.05	0.09	0.13	0.02	1.19	0.14	0.07	0.03	0.00	350.10	0.01	0.02
							Total	**0.81**	**12.04**	**20.88**	**1.41**	**0.60**	**0.15**	**15500.56**	**0.15**	**0.22**	**0.07**	**1.77**	**1.29**	**0.15**	**0.06**	**0.01**	**1108.37**	**0.02**	**0.03**
Miscellaneous Trips	2026	T7 Single	Aggregate	7	803	324,102	2,821	0.48	2.57	14.09	0.67	0.28	0.09	9644.87	0.03	0.03	0.03	0.15	0.81	0.04	0.02	0.01	502.76	0.00	0.00
Miscellaneous Truck Deliveries**	2026	T7 Single	Aggregate	10	1134	98,545	869	0.15	0.79	4.34	0.21	0.09	0.03	2971.07	0.01	0.01	0.01	0.04	0.25	0.01	0.00	0.00	152.87	0.00	0.00
12 Hr. Employees**	2026	LDT1	Aggregate	78	28470	461,214	1,264	0.04	1.91	0.22	0.13	0.05	0.01	663.90	0.03	0.04	0.01	0.35	0.04	0.02	0.01	0.00	109.95	0.00	0.01
9/80 Employees**	2026	LDT1	Aggregate	237	86505	1,401,381	3,839	0.11	5.79	0.67	0.39	0.16	0.02	2017.23	0.09	0.13	0.02	1.06	0.12	0.07	0.03	0.00	334.07	0.01	0.02
							Total	**0.77**	**11.06**	**19.31**	**1.40**	**0.59**	**0.15**	**15297.06**	**0.15**	**0.22**	**0.06**	**1.60**	**1.22**	**0.15**	**0.06**	**0.01**	**1099.65**	**0.02**	**0.03**
Miscellaneous Trips	2027	T7 Single	Aggregate	7	831	332,332	2,800	0.46	2.54	12.96	0.66	0.28	0.09	9519.09	0.03	0.03	0.03	0.15	0.77	0.04	0.02	0.01	512.62	0.00	0.00
Miscellaneous Truck Deliveries**	2027	T7 Single	Aggregate	10	1134	98,545	869	0.14	0.79	4.02	0.21	0.09	0.03	2954.32	0.01	0.01	0.01	0.04	0.23	0.01	0.00	0.00	152.01	0.00	0.00
12 Hr. Employees**	2027	LDT1	Aggregate	78	28470	461,214	1,264	0.03	1.74	0.20	0.13	0.05	0.01	640.36	0.03	0.04	0.01	0.32	0.04	0.02	0.01	0.00	106.05	0.00	0.01
9/80 Employees**	2027	LDT1	Aggregate	237	86505	1,401,381	3,839	0.10	5.30	0.61	0.39	0.16	0.02	1945.70	0.09	0.13	0.02	0.97	0.11	0.07	0.03	0.00	322.22	0.01	0.02
							Total	**0.74**	**10.37**	**17.79**	**1.39**	**0.58**	**0.14**	**15059.45**	**0.15**	**0.22**	**0.06**	**1.48**	**1.14**	**0.15**	**0.06**	**0.01**	**1092.90**	**0.02**	**0.03**
Miscellaneous Trips	2028	T7 Single	Aggregate	7	853	342,073	2,807	0.46	2.53	12.13	0.66	0.27	0.09	9497.09	0.03	0.03	0.03	0.15	0.74	0.04	0.02	0.01	525.12	0.00	0.00
Miscellaneous Truck Deliveries**	2028	T7 Single	Aggregate	10	1134	98,545	869	0.14	0.78	3.75	0.20	0.08	0.03	2940.14	0.01	0.01	0.01	0.04	0.21	0.01	0.00	0.00	151.28	0.00	0.00
12 Hr. Employees**	2028	LDT1	Aggregate	78	28470	461,214	1,264	0.03	1.60	0.18	0.13	0.05	0.01	619.96	0.03	0.04	0.01	0.29	0.03	0.02	0.01	0.00	102.67	0.00	0.01
9/80 Employees**	2028	LDT1	Aggregate	237	86505	1,401,381	3,839	0.09	4.87	0.55	0.39	0.16	0.02	1883.71	0.09	0.13	0.02	0.89	0.10	0.07	0.03	0.00	311.96	0.01	0.02
							Total	**0.72**	**9.79**	**16.61**	**1.38**	**0.57**	**0.14**	**14940.90**	**0.15**	**0.22**	**0.06**	**1.38**	**1.08**	**0.15**	**0.06**	**0.01**	**1091.02**	**0.02**	**0.03**
Miscellaneous Trips	2029	T7 Single	Aggregate	8	855	342,953	3,208	0.52	2.88	13.01	0.75	0.31	0.10	10804.07	0.03	0.04	0.03	0.15	0.70	0.04	0.02	0.01	524.05	0.00	0.00
Miscellaneous Truck Deliveries**	2029	T7 Single	Aggregate	10	1134	98,545	869	0.14	0.78	3.53	0.20	0.08	0.03	2926.66	0.01	0.01	0.01	0.04	0.20	0.01	0.00	0.00	150.58	0.00	0.00
12 Hr. Employees**	2029	LDT1	Aggregate	78	28470	461,214	1,264	0.03	1.45	0.16	0.13	0.05	0.01	602.25	0.03	0.04	0.00	0.27	0.03	0.02	0.01	0.00	99.74	0.00	0.01
9/80 Employees**	2029	LDT1	Aggregate	237	86505	1,401,381	3,839	0.08	4.41	0.49	0.39	0.16	0.02	1829.91	0.09	0.13	0.01	0.81	0.09	0.07	0.03	0.00	303.05	0.01	0.02
							Total	**0.77**	**9.53**	**17.19**	**1.47**	**0.60**	**0.16**	**16162.90**	**0.16**	**0.22**	**0.06**	**1.27**	**1.01**	**0.15**	**0.06**	**0.01**	**1077.42**	**0.02**	**0.03**
Miscellaneous Trips	2030	T7 Single	Aggregate	7	853	342,287	2,807	0.45	2.51	10.70	0.65	0.26	0.09	9407.07	0.03	0.03	0.03	0.15	0.65	0.04	0.02	0.01	520.46	0.00	0.00
Miscellaneous Truck Deliveries**	2030	T7 Single	Aggregate	10	1134	98,545	869	0.14	0.78	3.31	0.20	0.08	0.03	2912.27	0.01	0.01	0.01	0.04	0.19	0.01	0.00	0.00	149.84	0.00	0.00
12 Hr. Employees**	2030	LDT1	Aggregate	78	28470	461,214	1,264	0.02	1.33	0.14	0.13	0.05	0.01	587.09	0.03	0.04	0.00	0.24	0.03	0.02	0.01	0.00	97.23	0.00	0.01
9/80 Employees**	2030	LDT1	Aggregate	237	86505	1,401,381	3,839	0.07	4.03	0.44	0.39	0.16	0.02	1783.85	0.09	0.13	0.01	0.74	0.08	0.07	0.03	0.00	295.42	0.01	0.02
							Total	**0.68**	**8.64**	**14.59**	**1.37**	**0.56**	**0.14**	**14690.27**	**0.15**	**0.22**	**0.05**	**1.17**	**0.95**	**0.15**	**0.06**	**0.01**	**1062.95**	**0.02**	**0.03**
Miscellaneous Trips	2031	T7 Single	Aggregate	7	831	333,187	2,807	0.44	2.50	10.13	0.65	0.26	0.09	9366.29	0.03	0.03	0.03	0.15	0.60	0.04	0.02	0.01	504.43	0.00	0.00
Miscellaneous Truck Deliveries**	2031	T7 Single	Aggregate	10	1134	98,545	869	0.14	0.77	3.14	0.20	0.08	0.03	2899.65	0.01	0.01	0.01	0.04	0.18	0.01	0.00	0.00	149.19	0.00	0.00
12 Hr. Employees**	2031	LDT1	Aggregate	78	28470	461,214	1,264	0.02	1.19	0.12	0.13	0.05	0.01	574.03	0.03	0.04	0.00	0.22	0.02	0.02	0.01	0.00	95.06	0.00	0.01
9/80 Employees**	2031	LDT1	Aggregate	237	86505	1,401,381	3,839	0.06	3.63	0.38	0.39	0.16	0.02	1744.16	0.09	0.13	0.01	0.66	0.07	0.07	0.03	0.00	288.85	0.01	0.02
							Total	**0.66**	**8.09**	**13.77**	**1.36**	**0.55**	**0.14**	**14584.13**	**0.15**	**0.22**	**0.05**	**1.07**	**0.87**	**0.14**	**0.06**	**0.01**	**1037.53**	**0.02**	**0.03**
Miscellaneous Trips	2032	T7 Single	Aggregate	7	826	331,841	2,807	0.44	2.49	9.62	0.65	0.26	0.09	9329.55	0.03	0.03	0.03	0.15	0.57	0.04	0.02	0.01	500.42	0.00	0.00
Miscellaneous Truck Deliveries**	2032	T7 Single	Aggregate	10	1134	98,545	869	0.14	0.77	2.98	0.20	0.08	0.03	2888.27	0.01	0.01	0.01	0.04	0.17	0.01	0.00	0.00	148.61	0.00	0.00
12 Hr. Employees**	2032	LDT1	Aggregate	78	28470	461,214	1,264	0.02	1.09	0.11	0.13	0.05	0.01	563.05	0.03	0.04	0.00	0.20	0.02	0.02	0.01	0.00	93.25	0.00	0.01
9/80 Employees**	2032	LDT1	Aggregate	237	86505	1,401,381	3,839	0.05	3.31	0.33	0.39	0.16	0.02	1710.81	0.09	0.13	0.01	0.60	0.06	0.07	0.03	0.00	283.32	0.01	0.02
							Total	**0.64**	**7.65**	**13.03**	**1.36**	**0.55**	**0.14**	**14491.68**	**0.15**	**0.22**	**0.05**	**0.99**	**0.82**	**0.14**	**0.06**	**0.01**	**1025.60**	**0.02**	**0.03**
Miscellaneous Trips	2033	T7 Single	Aggregate	7	839	338,270	2,821	0.43	2.48	9.20	0.65	0.26	0.09	9339.16	0.03	0.03	0.03	0.15	0.55	0.04	0.02	0.01	508.11	0.00	0.00
Miscellaneous Truck Deliveries**	2033	T7 Single	Aggregate	10	1134	98,545	869	0.13	0.77	2.83	0.20	0.08	0.03	2876.90	0.01	0.01	0.01	0.04	0.16	0.01	0.00	0.00	148.02	0.00	0.00
12 Hr. Employees**	2033	LDT1	Aggregate	78	28470	461,214	1,264	0.02	1.01	0.10	0.13	0.05	0.01	553.84	0.03	0.04	0.00	0.18	0.02	0.02	0.01	0.00	91.72	0.00	0.01
9/80 Employees**	2033	LDT1	Aggregate	237	86505	1,401,381	3,839	0.05	3.06	0.29	0.39	0.16	0.02	1682.82	0.09	0.13	0.01	0.56	0.05	0.07	0.03	0.00	278.69	0.01	0.02
							Total	**0.63**	**7.31**	**12.42**	**1.36**	**0.55**	**0.14**	**14452.71**	**0.15**	**0.22**	**0.05**	**0.93**	**0.78**	**0.14**	**0.06**	**0.01**	**1026.54**	**0.02**	**0.03**
Miscellaneous Trips	2034	T7 Single	Aggregate	7	839	338,364	2,821	0.43	2.47	8.78	0.64	0.25	0.09	9305.70	0.03	0.03	0.03	0.15	0.53	0.04	0.02	0.01	506.43	0.00	0.00
Miscellaneous Truck Deliveries**	2034	T7 Single	Aggregate	10	1134	98,545	869	0.13	0.76	2.70	0.20	0.08	0.03	2866.59	0.01	0.01	0.01	0.04	0.15	0.01	0.00	0.00	147.49	0.00	0.00
12 Hr. Employees**	2034	LDT1	Aggregate	78	28470	461,214	1,264	0.01	0.93	0.09	0.13	0.05	0.01	546.03	0.03	0.04	0.00	0.17	0.02	0.02	0.01	0.00	90.43	0.00	0.01
9/80 Employees**	2034	LDT1	Aggregate	237	86505	1,401,381	3,839	0.04	2.83	0.27	0.39	0.16	0.02	1659.10	0.09	0.13	0.01	0.52	0.05	0.07	0.03	0.00	274.76	0.01	0.02
							Total	**0.62**	**6.99**	**11.84**	**1.36**	**0.54**	**0.14**	**14377.42**	**0.15**	**0.22**	**0.04**	**0.88**	**0.74**	**0.14**	**0.06**	**0.01**	**1019.11**	**0.02**	**0.03**
Miscellaneous Trips	2035	T7 Single	Aggregate	7	852	344,838	2,835	0.43	2.47	8.47	0.65	0.25	0.09	9323.65	0.03	0.03	0.03	0.15	0.51	0.04	0.02	0.01	514.56	0.00	0.00
Miscellaneous Truck Deliveries**	2035	T7 Single	Aggregate	10	1134	98,545	869	0.13	0.76	2.60	0.20	0.08	0.03	2857.94	0.01	0.01	0.01	0.04	0.15	0.01	0.00	0.00	147.05	0.00	0.00
12 Hr. Employees**	2035	LDT1	Aggregate	78	28470	461,214	1,264	0.01	0.88	0.08	0.13	0.05	0.01	539.64	0.03	0.04	0.00	0.16	0.02	0.02	0.01	0.00	89.37	0.00	0.01
9/80 Employees**	2035	LDT1	Aggregate	237	86505	1,401,381	3,839	0.04	2.66	0.25	0.39	0.16	0.02	1639.66	0.09	0.13	0.01	0.49	0.05	0.07	0.03	0.00	271.54	0.01	0.02
							Total	**0.61**	**6.77**	**11.40**	**1.36**	**0.54**	**0.14**	**14360.88**	**0.15**	**0.22**	**0.04**	**0.84**	**0.72**	**0.14**	**0.06**	**0.01**	**1022.52**	**0.02**	**0.03**
Miscellaneous Trips	2036	T7 Single	Aggregate	7	844	340,363	2,821	0.42	2.45	8.15	0.64	0.25	0.09	9254.64	0.03	0.03	0.03	0.15	0.49	0.04	0.02	0.01	506.63	0.00	0.00
Miscellaneous Truck Deliveries**	2036	T7 Single	Aggregate	10	1134	98,545	869	0.13	0.76	2.51	0.20	0.08	0.03	2850.86	0.01	0.01	0.01	0.04	0.14	0.01	0.00	0.00	146.68	0.00	0.00
12 Hr. Employees**	2036	LDT1	Aggregate	78	28470	461,214	1,264	0.01	0.83	0.08	0.13	0.05	0.01	534.28	0.03	0.04	0.00	0.15	0.01	0.02	0.01	0.00	88.48	0.00	0.01
9/80 Employees**	2036	LDT1	Aggregate	237	86505	1,401,381	3,839	0.04	2.52	0.24	0.39	0.16	0.02	1623.38	0.09	0.13	0.01	0.46	0.04	0.07	0.03	0.00	268.84	0.01	0.02
							Total	**0.60**	**6.55**	**10.98**	**1.35**	**0.54**	**0.14**	**14263.16**	**0.15**	**0.22**	**0.04**	**0.80**	**0.69**	**0.14**	**0.06**	**0.01**	**1010.63**	**0.02**	**0.03**
Miscellaneous Trips	2037	T7 Single	Aggregate	8	866	349,336	3,224	0.48	2.80	9.04	0.73	0.29	0.10	10553.32	0.03	0.04	0.03	0.15	0.49	0.04	0.02	0.01	518.83	0.00	0.00
Miscellaneous Truck Deliveries**	2037	T7 Single	Aggregate	10	1134	98,545	869	0.13	0.75	2.44	0.20	0.08	0.03	2844.55	0.01	0.01	0.01	0.04	0.14	0.01	0.00	0.00	146.36	0.00	0.00
12 Hr. Employees**	2037	LDT1	Aggregate	78	28470	461,214	1,264	0.01	0.79	0.07	0.13	0.05	0.01	529.93	0.03	0.04	0.00	0.14	0.01	0.02	0.01	0.00	87.76	0.00	0.01
9/80 Employees**	2037	LDT1	Aggregate	237	86505	1,401,381	3,839	0.03	2.41	0.23	0.38	0.16	0.02	1610.16	0.09	0.13	0.01	0.44	0.04	0.07	0.03	0.00	266.66	0.01	0.02
							Total	**0.66**	**6.76**	**11.78**	**1.44**	**0.57**	**0.15**	**15537.97**	**0.16**	**0.22**	**0.04**	**0.78**	**0.68**	**0.14**	**0.06**	**0.01**	**1019.61**	**0.02**	**0.03**
Miscellaneous Trips	2038	T7 Single	Aggregate	8	858	346,893	3,232	0.48	2.80	8.83	0.73	0.29	0.10	10559.57	0.03	0.04	0.03	0.15	0.47	0.04	0.02	0.01	514.23	0.00	0.00
Miscellaneous Truck Deliveries**	2038	T7 Single	Aggregate	10	1134	98,545	869	0.13	0.75	2.37	0.20	0.08	0.03	2839.19	0.01	0.01	0.01	0.04	0.13	0.01	0.00	0.00	146.08	0.00	0.00
12 Hr. Employees**	2038	LDT1	Aggregate	78	28470	461,214	1,264	0.01	0.77	0.07	0.13	0.05	0.01	526.36	0.03	0.04	0.00	0.14	0.01	0.02	0.01	0.00	87.17	0.00	0.01
9/80 Employees**	2038	LDT1	Aggregate	237	86505	1,401,381	3,839	0.03	2.34	0.22	0.38	0.16	0.02	1599.34	0.09	0.13	0.01	0.43	0.04	0.07	0.03	0.00	264.86	0.01	0.02
							Total	**0.65**	**6.66**	**11.49**	**1.44**	**0.57**	**0.15**	**15524.46**	**0.16**	**0.22**	**0.04**	**0.76**	**0.66**	**0.14**	**0.06**	**0.01**	**1012.35**	**0.02**	**0.03**
Miscellaneous Trips	2039	T7 Single	Aggregate	8	858	346,893	3,232	0.48	2.80	8.62	0.73	0.29	0.10	10541.80	0.03	0.04	0.03	0.15	0.46	0.04	0.02	0.01	513.37	0.00	0.00
Miscellaneous Truck Deliveries**	2039	T7 Single	Aggregate	10	1134	98,545	869	0.13	0.75

Miscellaneous Truck Deliveries**	2042	T7 Single	Aggregate	10	1134	98,545	869	0.13	0.75	2.20	0.20	0.08	0.03	2823.56	0.01	0.01	0.01	0.04	0.12	0.01	0.00	0.00	145.28	0.00	0.00
12 Hr. Employees**	2042	LDT1	Aggregate	78	28470	461,214	1,264	0.01	0.71	0.07	0.13	0.05	0.01	517.46	0.03	0.04	0.00	0.13	0.01	0.02	0.01	0.00	85.70	0.00	0.01
9/80 Employees**	2042	LDT1	Aggregate	237	86505	1,401,381	3,839	0.03	2.17	0.20	0.38	0.15	0.02	1572.28	0.09	0.13	0.01	0.40	0.04	0.07	0.03	0.00	260.38	0.01	0.02
							Total	**0.58**	**6.09**	**9.68**	**1.35**	**0.53**	**0.14**	**14170.29**	**0.15**	**0.22**	**0.04**	**0.70**	**0.57**	**0.14**	**0.06**	**0.01**	**954.33**	**0.02**	**0.03**
Miscellaneous Trips	2043	T7 Single	Aggregate	7	755	306,692	2,842	0.42	2.45	7.11	0.64	0.25	0.09	9225.23	0.03	0.03	0.02	0.13	0.38	0.03	0.01	0.00	451.69	0.00	0.00
Miscellaneous Truck Deliveries**	2043	T7 Single	Aggregate	10	1134	98,545	869	0.13	0.75	2.17	0.20	0.08	0.03	2820.80	0.01	0.01	0.01	0.04	0.12	0.01	0.00	0.00	145.14	0.00	0.00
12 Hr. Employees**	2043	LDT1	Aggregate	78	28470	461,214	1,264	0.01	0.71	0.07	0.13	0.05	0.01	516.13	0.03	0.04	0.00	0.13	0.01	0.02	0.01	0.00	85.48	0.00	0.01
9/80 Employees**	2043	LDT1	Aggregate	237	86505	1,401,381	3,839	0.03	2.14	0.20	0.38	0.15	0.02	1568.25	0.09	0.13	0.01	0.39	0.04	0.07	0.03	0.00	259.71	0.01	0.02
							Total	**0.58**	**6.05**	**9.55**	**1.35**	**0.53**	**0.14**	**14130.42**	**0.15**	**0.22**	**0.04**	**0.69**	**0.56**	**0.14**	**0.06**	**0.01**	**942.02**	**0.02**	**0.03**
Miscellaneous Trips	2044	T7 Single	Aggregate	6	738	301,457	2,448	0.36	2.11	6.04	0.55	0.21	0.08	7938.08	0.03	0.03	0.02	0.13	0.37	0.03	0.01	0.00	443.52	0.00	0.00
Miscellaneous Truck Deliveries**	2044	T7 Single	Aggregate	10	1134	98,545	869	0.13	0.75	2.15	0.20	0.08	0.03	2817.89	0.01	0.01	0.01	0.04	0.12	0.01	0.00	0.00	144.99	0.00	0.00
12 Hr. Employees**	2044	LDT1	Aggregate	78	28470	461,214	1,264	0.01	0.70	0.07	0.13	0.05	0.01	515.08	0.03	0.04	0.00	0.13	0.01	0.02	0.01	0.00	85.30	0.00	0.01
9/80 Employees**	2044	LDT1	Aggregate	237	86505	1,401,381	3,839	0.03	2.12	0.20	0.38	0.15	0.02	1565.06	0.09	0.13	0.01	0.39	0.04	0.07	0.03	0.00	259.19	0.01	0.02
							Total	**0.52**	**5.68**	**8.45**	**1.26**	**0.50**	**0.12**	**12836.11**	**0.15**	**0.21**	**0.04**	**0.69**	**0.54**	**0.14**	**0.06**	**0.01**	**933.00**	**0.02**	**0.03**
Miscellaneous Trips	2045	T7 Single	Aggregate	6	709	290,525	2,454	0.36	2.11	5.99	0.55	0.22	0.08	7950.55	0.03	0.03	0.02	0.12	0.35	0.03	0.01	0.00	427.07	0.00	0.00
Miscellaneous Truck Deliveries**	2045	T7 Single	Aggregate	10	1134	98,545	869	0.13	0.75	2.12	0.20	0.08	0.03	2815.42	0.01	0.01	0.01	0.04	0.12	0.01	0.00	0.00	144.86	0.00	0.00
12 Hr. Employees**	2045	LDT1	Aggregate	78	28470	461,214	1,264	0.01	0.69	0.06	0.13	0.05	0.01	514.22	0.03	0.04	0.00	0.13	0.01	0.02	0.01	0.00	85.16	0.00	0.01
9/80 Employees**	2045	LDT1	Aggregate	237	86505	1,401,381	3,839	0.03	2.11	0.20	0.38	0.15	0.02	1562.45	0.09	0.13	0.00	0.38	0.04	0.07	0.03	0.00	258.75	0.01	0.02
							Total	**0.52**	**5.66**	**8.37**	**1.26**	**0.50**	**0.12**	**12842.64**	**0.15**	**0.21**	**0.04**	**0.68**	**0.52**	**0.14**	**0.05**	**0.01**	**915.84**	**0.02**	**0.03**
Miscellaneous Trips	2046	T7 Single	Aggregate	6	693	283,211	2,448	0.36	2.10	5.93	0.55	0.21	0.08	7925.62	0.03	0.03	0.02	0.12	0.34	0.03	0.01	0.00	416.03	0.00	0.00
Miscellaneous Truck Deliveries**	2046	T7 Single	Aggregate	10	1134	98,545	869	0.13	0.75	2.10	0.20	0.08	0.03	2813.47	0.01	0.01	0.01	0.04	0.12	0.01	0.00	0.00	144.76	0.00	0.00
12 Hr. Employees**	2046	LDT1	Aggregate	78	28470	461,214	1,264	0.01	0.69	0.06	0.13	0.05	0.01	513.50	0.03	0.04	0.00	0.13	0.01	0.02	0.01	0.00	85.04	0.00	0.01
9/80 Employees**	2046	LDT1	Aggregate	237	86505	1,401,381	3,839	0.03	2.09	0.20	0.38	0.15	0.02	1560.27	0.09	0.13	0.00	0.38	0.04	0.07	0.03	0.00	258.39	0.01	0.02
							Total	**0.52**	**5.63**	**8.29**	**1.26**	**0.50**	**0.12**	**12812.86**	**0.15**	**0.21**	**0.03**	**0.67**	**0.51**	**0.14**	**0.05**	**0.01**	**904.22**	**0.02**	**0.03**
Miscellaneous Trips	2047	T7 Single	Aggregate	6	677	278,191	2,466	0.36	2.12	5.93	0.56	0.22	0.08	7979.26	0.03	0.03	0.02	0.12	0.33	0.03	0.01	0.00	408.41	0.00	0.00
Miscellaneous Truck Deliveries**	2047	T7 Single	Aggregate	10	1134	98,545	869	0.13	0.75	2.09	0.20	0.08	0.03	2811.83	0.01	0.01	0.01	0.04	0.12	0.01	0.00	0.00	144.67	0.00	0.00
12 Hr. Employees**	2047	LDT1	Aggregate	78	28470	461,214	1,264	0.01	0.68	0.06	0.13	0.05	0.01	512.81	0.03	0.04	0.00	0.12	0.01	0.02	0.01	0.00	84.93	0.00	0.01
9/80 Employees**	2047	LDT1	Aggregate	237	86505	1,401,381	3,839	0.03	2.08	0.19	0.38	0.15	0.02	1558.15	0.09	0.13	0.00	0.38	0.04	0.07	0.03	0.00	258.04	0.01	0.02
							Total	**0.52**	**5.63**	**8.28**	**1.26**	**0.50**	**0.12**	**12862.06**	**0.15**	**0.21**	**0.03**	**0.67**	**0.50**	**0.14**	**0.05**	**0.01**	**896.06**	**0.02**	**0.03**
Miscellaneous Trips	2048	T7 Single	Aggregate	6	660	272,127	2,472	0.36	2.12	5.92	0.56	0.22	0.08	7994.67	0.03	0.03	0.02	0.12	0.33	0.03	0.01	0.00	399.31	0.00	0.00
Miscellaneous Truck Deliveries**	2048	T7 Single	Aggregate	10	1134	98,545	869	0.13	0.75	2.08	0.20	0.08	0.03	2810.43	0.01	0.01	0.01	0.04	0.12	0.01	0.00	0.00	144.60	0.00	0.00
12 Hr. Employees**	2048	LDT1	Aggregate	78	28470	461,214	1,264	0.01	0.68	0.06	0.13	0.05	0.01	512.29	0.03	0.04	0.00	0.12	0.01	0.02	0.01	0.00	84.84	0.00	0.01
9/80 Employees**	2048	LDT1	Aggregate	237	86505	1,401,381	3,839	0.03	2.07	0.19	0.38	0.15	0.02	1556.59	0.09	0.13	0.00	0.38	0.04	0.07	0.03	0.00	257.78	0.01	0.02
							Total	**0.52**	**5.62**	**8.26**	**1.26**	**0.50**	**0.12**	**12873.98**	**0.15**	**0.21**	**0.03**	**0.66**	**0.49**	**0.13**	**0.05**	**0.01**	**886.54**	**0.02**	**0.03**
Miscellaneous Trips	2049	T7 Single	Aggregate	5	547	226,210	2,065	0.30	1.77	4.93	0.46	0.18	0.06	6675.41	0.02	0.02	0.02	0.10	0.27	0.03	0.01	0.00	331.79	0.00	0.00
Miscellaneous Truck Deliveries**	2049	T7 Single	Aggregate	10	1134	98,545	869	0.13	0.75	2.07	0.20	0.08	0.03	2809.17	0.01	0.01	0.01	0.04	0.12	0.01	0.00	0.00	144.54	0.00	0.00
12 Hr. Employees**	2049	LDT1	Aggregate	78	28470	461,214	1,264	0.01	0.68	0.06	0.13	0.05	0.01	511.92	0.03	0.04	0.00	0.12	0.01	0.02	0.01	0.00	84.78	0.00	0.01
9/80 Employees**	2049	LDT1	Aggregate	237	86505	1,401,381	3,839	0.03	2.07	0.19	0.38	0.15	0.02	1555.44	0.09	0.13	0.00	0.38	0.04	0.07	0.03	0.00	257.59	0.01	0.02
							Total	**0.46**	**5.27**	**7.26**	**1.17**	**0.46**	**0.11**	**11551.94**	**0.14**	**0.21**	**0.03**	**0.64**	**0.43**	**0.13**	**0.05**	**0.01**	**818.69**	**0.02**	**0.03**
Miscellaneous Trips	2050	T7 Single	Aggregate	4	518	217,037	1,676	0.24	1.44	3.99	0.38	0.15	0.05	5417.77	0.02	0.02	0.02	0.09	0.26	0.02	0.01	0.00	318.32	0.00	0.00
Miscellaneous Truck Deliveries**	2050	T7 Single	Aggregate	10	1134	98,545	869	0.13	0.75	2.07	0.20	0.08	0.03	2809.09	0.01	0.01	0.01	0.04	0.12	0.01	0.00	0.00	144.53	0.00	0.00
12 Hr. Employees**	2050	LDT1	Aggregate	78	28470	461,214	1,264	0.01	0.68	0.06	0.13	0.05	0.01	511.66	0.03	0.04	0.00	0.12	0.01	0.02	0.01	0.00	84.73	0.00	0.01
9/80 Employees**	2050	LDT1	Aggregate	237	86505	1,401,381	3,839	0.03	2.07	0.19	0.38	0.15	0.02	1554.65	0.09	0.13	0.00	0.38	0.04	0.07	0.03	0.00	257.46	0.01	0.02
							Total	**0.41**	**4.93**	**6.31**	**1.08**	**0.43**	**0.10**	**10293.16**	**0.14**	**0.21**	**0.03**	**0.64**	**0.42**	**0.13**	**0.05**	**0.01**	**805.05**	**0.02**	**0.03**

**Trips Counts did not change from year to year

			EMFAC2014																
												Running							
								ROC	CO	NOX	PM10	PM2.5	SOX	CO2	N2O*	CH4*
Source	Region	Calendar Year	Season	Vehical Class	Fuel	Model Year	Speed	(g/mile)	(g/mile)	(g/mile)	(g/mile)	(g/mile)	(g/mile)	(g/mile)	(g/mile)	(g/mile)
EMFAC2014	Santa Barbara County	2019	Annual Average	T7 Single	DSL	Aggregate	Aggregate	0.1636628	0.660751	6.414886	0.157711	0.092837	0.015984	1675.399782	0.0048	0.0051
EMFAC2014	Santa Barbara County	2019	Annual Average	LDT1	Gas	Aggregate	Aggregate	0.0387627	1.52672	0.173831	0.048887	0.019717	0.003154	313.4470189	0.0101	0.0157
EMFAC2014	Santa Barbara County	2020	Annual Average	T7 Single	DSL	Aggregate	Aggregate	0.1148527	0.484064	5.518897	0.12821	0.064612	0.015823	1658.524343	0.0048	0.0051
EMFAC2014	Santa Barbara County	2020	Annual Average	LDT1	Gas	Aggregate	Aggregate	0.0288839	1.286795	0.150631	0.046769	0.019607	0.003059	304.3027467	0.0101	0.0157
EMFAC2014	Santa Barbara County	2021	Annual Average	T7 Single	DSL	Aggregate	Aggregate	0.1099141	0.474056	4.907384	0.124539	0.0611	0.015654	1640.851415	0.0048	0.0051
EMFAC2014	Santa Barbara County	2021	Annual Average	LDT1	Gas	Aggregate	Aggregate	0.0255052	1.154666	0.135049	0.046696	0.019539	0.002954	293.9905879	0.0101	0.0157
EMFAC2014	Santa Barbara County	2022	Annual Average	T7 Single	DSL	Aggregate	Aggregate	0.1051088	0.465265	4.342103	0.120816	0.057538	0.015473	1621.847021	0.0048	0.0051
EMFAC2014	Santa Barbara County	2022	Annual Average	LDT1	Gas	Aggregate	Aggregate	0.0224845	1.037943	0.120919	0.046632	0.019481	0.002845	283.266169	0.0101	0.0157
EMFAC2014	Santa Barbara County	2023	Annual Average	T7 Single	DSL	Aggregate	Aggregate	0.0812015	0.422054	2.897532	0.112616	0.049692	0.01508	1580.668865	0.0048	0.0051
EMFAC2014	Santa Barbara County	2023	Annual Average	LDT1	Gas	Aggregate	Aggregate	0.0199349	0.938577	0.10853	0.046583	0.019436	0.002732	272.1746235	0.0101	0.0157
EMFAC2014	Santa Barbara County	2024	Annual Average	T7 Single	DSL	Aggregate	Aggregate	0.0793749	0.418489	2.652263	0.110973	0.048121	0.014975	1569.669812	0.0048	0.0051
EMFAC2014	Santa Barbara County	2024	Annual Average	LDT1	Gas	Aggregate	Aggregate	0.0176614	0.851947	0.097392	0.046533	0.01939	0.002619	260.925093	0.0101	0.0157
EMFAC2014	Santa Barbara County	2025	Annual Average	T7 Single	DSL	Aggregate	Aggregate	0.077885	0.415998	2.445556	0.109616	0.046823	0.014883	1560.007891	0.0048	0.0051
EMFAC2014	Santa Barbara County	2025	Annual Average	LDT1	Gas	Aggregate	Aggregate	0.0156101	0.769569	0.087434	0.046491	0.01935	0.002506	249.7566045	0.0101	0.0157
EMFAC2014	Santa Barbara County	2026	Annual Average	T7 Single	DSL	Aggregate	Aggregate	0.0764697	0.413351	2.264896	0.108431	0.045688	0.014795	1550.81095	0.0048	0.0051
EMFAC2014	Santa Barbara County	2026	Annual Average	LDT1	Gas	Aggregate	Aggregate	0.0135081	0.684354	0.078942	0.046388	0.019256	0.00239	238.3180815	0.0101	0.0157
EMFAC2014	Santa Barbara County	2027	Annual Average	T7 Single	DSL	Aggregate	Aggregate	0.0751427	0.410784	2.100237	0.107378	0.044681	0.014712	1542.065958	0.0048	0.0051
EMFAC2014	Santa Barbara County	2027	Annual Average	LDT1	Gas	Aggregate	Aggregate	0.0121065	0.62613	0.071649	0.046299	0.019174	0.002305	229.8673751	0.0101	0.0157
EMFAC2014	Santa Barbara County	2028	Annual Average	T7 Single	DSL	Aggregate	Aggregate	0.0740744	0.40917	1.959561	0.106514	0.043854	0.014641	1534.665984	0.0048	0.0051
EMFAC2014	Santa Barbara County	2028	Annual Average	LDT1	Gas	Aggregate	Aggregate	0.010912	0.575279	0.064872	0.046176	0.019062	0.002231	222.5444689	0.0101	0.0157
EMFAC2014	Santa Barbara County	2029	Annual Average	T7 Single	DSL	Aggregate	Aggregate	0.073108	0.407483	1.840157	0.105802	0.043173	0.014574	1527.632291	0.0048	0.0051
EMFAC2014	Santa Barbara County	2029	Annual Average	LDT1	Gas	Aggregate	Aggregate	0.0096278	0.521417	0.057733	0.046058	0.018952	0.002167	216.1887271	0.0101	0.0157
EMFAC2014	Santa Barbara County	2030	Annual Average	T7 Single	DSL	Aggregate	Aggregate	0.0721018	0.405074	1.729324	0.105148	0.042548	0.014503	1520.118871	0.0048	0.0051
EMFAC2014	Santa Barbara County	2030	Annual Average	LDT1	Gas	Aggregate	Aggregate	0.0085476	0.47639	0.051429	0.045951	0.018855	0.002111	210.7461696	0.0101	0.0157
EMFAC2014	Santa Barbara County	2031	Annual Average	T7 Single	DSL	Aggregate	Aggregate	0.0713302	0.403472	1.637517	0.104676	0.042096	0.01444	1513.53024	0.0048	0.0051
EMFAC2014	Santa Barbara County	2031	Annual Average	LDT1	Gas	Aggregate	Aggregate	0.0073952	0.428641	0.044421	0.045848	0.01876	0.002064	206.0580998	0.0101	0.0157
EMFAC2014	Santa Barbara County	2032	Annual Average	T7 Single	DSL	Aggregate	Aggregate	0.0705801	0.401663	1.554133	0.104231	0.04167	0.014383	1507.592376	0.0048	0.0051
EMFAC2014	Santa Barbara County	2032	Annual Average	LDT1	Gas	Aggregate	Aggregate	0.0064795	0.390665	0.0389	0.04576	0.018679	0.002024	202.1174592	0.0101	0.0157
EMFAC2014	Santa Barbara County	2033	Annual Average	T7 Single	DSL	Aggregate	Aggregate	0.0698428	0.399515	1.479882	0.103851	0.041306	0.014327	1501.656346	0.0048	0.0051
EMFAC2014	Santa Barbara County	2033	Annual Average	LDT1	Gas	Aggregate	Aggregate	0.0057611	0.361019	0.034634	0.045685	0.01861	0.00199	198.8103021	0.0101	0.0157
EMFAC2014	Santa Barbara County	2034	Annual Average	T7 Single	DSL	Aggregate	Aggregate	0.0691737	0.397525	1.411882	0.10352	0.04099	0.014275	1496.275725	0.0048	0.0051
EMFAC2014	Santa Barbara County	2034	Annual Average	LDT1	Gas	Aggregate	Aggregate	0.0051019	0.333818	0.031441	0.045618	0.018548	0.001962	196.0086803	0.0101	0.0157
EMFAC2014	Santa Barbara County	2035	Annual Average	T7 Single	DSL	Aggregate	Aggregate	0.0685879	0.395786	1.354737	0.103226	0.040709	0.014232	1491.758828	0.0048	0.0051
EMFAC2014	Santa Barbara County	2035	Annual Average	LDT1	Gas	Aggregate	Aggregate	0.0046397	0.314325	0.029582	0.045563	0.018497	0.001939	193.7120533	0.0101	0.0157
EMFAC2014	Santa Barbara County	2036	Annual Average	T7 Single	DSL	Aggregate	Aggregate	0.0681713	0.394717	1.311058	0.103051	0.040541	0.014197	1488.066227	0.0048	0.0051
EMFAC2014	Santa Barbara County	2036	Annual Average	LDT1	Gas	Aggregate	Aggregate	0.0042255	0.297206	0.027937	0.045517	0.018456	0.001919	191.7885367	0.0101	0.0157
EMFAC2014	Santa Barbara County	2037	Annual Average	T7 Single	DSL	Aggregate	Aggregate	0.0677995	0.393766	1.271732	0.102888	0.040386	0.014165	1484.77282	0.0048	0.0051
EMFAC2014	Santa Barbara County	2037	Annual Average	LDT1	Gas	Aggregate	Aggregate	0.0039374	0.284765	0.026759	0.045479	0.01842	0.001903	190.2272576	0.0101	0.0157
EMFAC2014	Santa Barbara County	2038	Annual Average	T7 Single	DSL	Aggregate	Aggregate	0.0675066	0.393069	1.239263	0.102747	0.040251	0.014139	1481.973671	0.0048	0.0051
EMFAC2014	Santa Barbara County	2038	Annual Average	LDT1	Gas	Aggregate	Aggregate	0.0037235	0.275967	0.025795	0.045446	0.01839	0.001891	188.9482978	0.0101	0.0157
EMFAC2014	Santa Barbara County	2039	Annual Average	T7 Single	DSL	Aggregate	Aggregate	0.067245	0.392449	1.210408	0.102624	0.040133	0.014115	1479.480341	0.0048	0.0051
EMFAC2014	Santa Barbara County	2039	Annual Average	LDT1	Gas	Aggregate	Aggregate	0.0035636	0.269137	0.025074	0.045417	0.018363	0.00188	187.8894031	0.0101	0.0157
EMFAC2014	Santa Barbara County	2040	Annual Average	T7 Single	DSL	Aggregate	Aggregate	0.0669816	0.391737	1.184391	0.102517	0.040031	0.014093	1477.153206	0.0048	0.0051
EMFAC2014	Santa Barbara County	2040	Annual Average	LDT1	Gas	Aggregate	Aggregate	0.0034568	0.264045	0.024561	0.045394	0.018342	0.001871	187.0368744	0.0101	0.0157
EMFAC2014	Santa Barbara County	2041	Annual Average	T7 Single	DSL	Aggregate	Aggregate	0.0667893	0.391323	1.164092	0.102432	0.039949	0.014075	1475.301028	0.0048	0.0051
EMFAC2014	Santa Barbara County	2041	Annual Average	LDT1	Gas	Aggregate	Aggregate	0.0033827	0.259783	0.024153	0.045376	0.018325	0.001864	186.3300062	0.0101	0.0157
EMFAC2014	Santa Barbara County	2042	Annual Average	T7 Single	DSL	Aggregate	Aggregate	0.0666533	0.391096	1.148571	0.102365	0.039885	0.014061	1473.81594	0.0048	0.0051
EMFAC2014	Santa Barbara County	2042	Annual Average	LDT1	Gas	Aggregate	Aggregate	0.0033224	0.256189	0.023825	0.04536	0.018311	0.001858	185.7512062	0.0101	0.0157
EMFAC2014	Santa Barbara County	2043	Annual Average	T7 Single	DSL	Aggregate	Aggregate	0.066524	0.390809	1.134534	0.102308	0.03983	0.014047	1472.376455	0.0048	0.0051
EMFAC2014	Santa Barbara County	2043	Annual Average	LDT1	Gas	Aggregate	Aggregate	0.0032746	0.253181	0.023562	0.045348	0.0183	0.001853	185.2755526	0.0101	0.0157
EMFAC2014	Santa Barbara County	2044	Annual Average	T7 Single	DSL	Aggregate	Aggregate	0.0663737	0.390343	1.119698	0.102258	0.039783	0.014033	1470.855227	0.0048	0.0051
EMFAC2014	Santa Barbara County	2044	Annual Average	LDT1	Gas	Aggregate	Aggregate	0.0032415	0.250854	0.023377	0.045337	0.01829	0.00185	184.8982777	0.0101	0.0157
EMFAC2014	Santa Barbara County	2045	Annual Average	T7 Single	DSL	Aggregate	Aggregate	0.0662476	0.38998	1.106951	0.102217	0.039743	0.01402	1469.564258	0.0048	0.0051
EMFAC2014	Santa Barbara County	2045	Annual Average	LDT1	Gas	Aggregate	Aggregate	0.0032182	0.249029	0.023246	0.045329	0.018282	0.001847	184.5901046	0.0101	0.0157
EMFAC2014	Santa Barbara County	2046	Annual Average	T7 Single	DSL	Aggregate	Aggregate	0.0661629	0.389749	1.098155	0.102189	0.039716	0.014011	1468.546867	0.0048	0.0051
EMFAC2014	Santa Barbara County	2046	Annual Average	LDT1	Gas	Aggregate	Aggregate	0.0031981	0.24747	0.023127	0.045322	0.018276	0.001844	184.3320343	0.0101	0.0157
EMFAC2014	Santa Barbara County	2047	Annual Average	T7 Single	DSL	Aggregate	Aggregate	0.0661041	0.389595	1.091433	0.102168	0.039696	0.014002	1467.694082	0.0048	0.0051
EMFAC2014	Santa Barbara County	2047	Annual Average	LDT1	Gas	Aggregate	Aggregate	0.0031754	0.245791	0.022982	0.045316	0.018271	0.001841	184.082379	0.0101	0.0157
EMFAC2014	Santa Barbara County	2048	Annual Average	T7 Single	DSL	Aggregate	Aggregate	0.0660612	0.389495	1.086279	0.102151	0.03968	0.013995	1466.959407	0.0048	0.0051
EMFAC2014	Santa Barbara County	2048	Annual Average	LDT1	Gas	Aggregate	Aggregate	0.0031608	0.244712	0.022892	0.045312	0.018267	0.00184	183.897293	0.0101	0.0157
EMFAC2014	Santa Barbara County	2049	Annual Average	T7 Single	DSL	Aggregate	Aggregate	0.0660294	0.389408	1.081938	0.102138	0.039668	0.013989	1466.303215	0.0048	0.0051
EMFAC2014	Santa Barbara County	2049	Annual Average	LDT1	Gas	Aggregate	Aggregate	0.0031544	0.244277	0.022867	0.045309	0.018264	0.001838	183.7619091	0.0101	0.0157
EMFAC2014	Santa Barbara County	2050	Annual Average	T7 Single	DSL	Aggregate	Aggregate	0.0660117	0.389392	1.078579	0.102126	0.039657	0.013989	1466.263334	0.0048	0.0051
EMFAC2014	Santa Barbara County	2050	Annual Average	LDT1	Gas	Aggregate	Aggregate	0.0031507	0.244015	0.022853	0.045307	0.018263	0.001837	183.6685489	0.0101	0.0157

*CCAR General Reporting Protocol Version 3.1 January 2009

Unmitigated Operating Tankers Emissions

Vehicle Fleet Mix Aggregate

								Daily Emissions									Annual Emissions								
Process	Calendar Year	Vehicle Class	Model Year	Daily Trips	# Trips per Year	Annual miles	Daily Miles	ROC (lbs/day)	CO (lbs/day)	NOX (lbs/day)	PM10 (lbs/day)	PM2.5 (lbs/day)	SOX (lbs/day)	CO2 (lbs/day)	N2O (lbs/day)	CH4 (lbs/day)	ROC (tons/yr)	CO (tons/yr)	NOX (tons/yr)	PM10 (tons/yr)	PM2.5 (tons/yr)	SOX (tons/yr)	CO2 (tonne/yr)	N2O (tonne/yr)	CH4 (tonne/yr)
Tanker Trips	2019	T7 Single	Aggregate	54	19696	2,580,550	7,070	2.55	10.30	99.99	2.46	1.45	0.25	26113.54	0.07	0.08	0.47	1.88	18.25	0.45	0.26	0.05	4324.67	0.01	0.01
Tanker Trips	2020	T7 Single	Aggregate	76	26651	3,581,745	9,813	2.48	10.47	119.39	2.77	1.40	0.34	35879.33	0.10	0.11	0.45	1.91	21.79	0.51	0.26	0.06	5942.09	0.02	0.02
Tanker Trips	2021	T7 Single	Aggregate	88	31900	4,184,725	11,465	2.78	11.98	124.04	3.15	1.54	0.40	41474.93	0.12	0.13	0.51	2.19	22.64	0.57	0.28	0.07	6868.45	0.02	0.02
Tanker Trips	2022	T7 Single	Aggregate	90	32139	4,225,605	11,577	2.68	11.87	110.82	3.08	1.47	0.39	41393.20	0.12	0.13	0.49	2.17	20.23	0.56	0.27	0.07	6855.22	0.02	0.02
Tanker Trips	2023	T7 Single	Aggregate	94	33282	4,419,785	12,109	2.17	11.27	77.35	3.01	1.33	0.40	42198.68	0.13	0.14	0.40	2.06	14.12	0.55	0.24	0.07	6988.19	0.02	0.02
Tanker Trips	2024	T7 Single	Aggregate	144	51962	6,852,875	18,775	3.29	17.32	109.78	4.59	1.99	0.62	64970.59	0.20	0.21	0.60	3.16	20.04	0.84	0.36	0.11	10759.79	0.03	0.03
Tanker Trips	2025	T7 Single	Aggregate	166	60560	7,983,280	21,872	3.76	20.06	117.92	5.29	2.26	0.72	75223.31	0.23	0.25	0.69	3.66	21.52	0.96	0.41	0.13	12457.50	0.04	0.04
Tanker Trips	2026	T7 Single	Aggregate	182	65323	8,672,765	23,761	4.01	21.65	118.64	5.68	2.39	0.78	81238.15	0.25	0.27	0.73	3.95	21.65	1.04	0.44	0.14	13453.62	0.04	0.04
Tanker Trips	2027	T7 Single	Aggregate	186	67153	8,900,160	24,384	4.04	22.08	112.90	5.77	2.40	0.79	82898.05	0.26	0.27	0.74	4.03	20.60	1.05	0.44	0.14	13728.51	0.04	0.05
Tanker Trips	2028	T7 Single	Aggregate	198	71857	9,457,150	25,910	4.23	23.37	111.94	6.08	2.51	0.84	87664.11	0.27	0.29	0.77	4.27	20.43	1.11	0.46	0.15	14517.67	0.05	0.05
Tanker Trips	2029	T7 Single	Aggregate	202	72602	9,633,080	26,392	4.25	23.71	107.07	6.16	2.51	0.85	88885.38	0.28	0.30	0.78	4.33	19.54	1.12	0.46	0.15	14719.96	0.05	0.05
Tanker Trips	2030	T7 Single	Aggregate	200	71822	9,498,395	26,023	4.14	23.24	99.21	6.03	2.44	0.83	87211.83	0.28	0.29	0.75	4.24	18.11	1.10	0.45	0.15	14442.77	0.05	0.05
Tanker Trips	2031	T7 Single	Aggregate	188	68136	8,988,125	24,625	3.87	21.90	88.90	5.68	2.29	0.78	82169.44	0.26	0.28	0.71	4.00	16.22	1.04	0.42	0.14	13607.64	0.04	0.05
Tanker Trips	2032	T7 Single	Aggregate	184	66021	8,749,415	23,971	3.73	21.23	82.13	5.51	2.20	0.76	79671.59	0.25	0.27	0.68	3.87	14.99	1.01	0.40	0.14	13194.28	0.04	0.04
Tanker Trips	2033	T7 Single	Aggregate	184	66216	8,782,995	24,063	3.71	21.19	78.46	5.51	2.19	0.76	79662.99	0.25	0.27	0.68	3.87	14.32	1.01	0.40	0.14	13192.77	0.04	0.04
Tanker Trips	2034	T7 Single	Aggregate	184	66149	8,771,680	24,032	3.66	21.06	74.80	5.48	2.17	0.76	79273.27	0.25	0.27	0.67	3.84	13.65	1.00	0.40	0.14	13128.56	0.04	0.04
Tanker Trips	2035	T7 Single	Aggregate	184	66383	8,811,830	24,142	3.65	21.07	72.10	5.49	2.17	0.76	79397.38	0.26	0.27	0.67	3.84	13.16	1.00	0.40	0.14	13148.84	0.04	0.04
Tanker Trips	2036	T7 Single	Aggregate	188	68379	9,030,465	24,741	3.72	21.53	71.51	5.62	2.21	0.77	81164.36	0.26	0.28	0.68	3.93	13.05	1.03	0.40	0.14	13441.73	0.04	0.05
Tanker Trips	2037	T7 Single	Aggregate	186	67726	8,917,680	24,432	3.65	21.21	68.50	5.54	2.18	0.76	79974.14	0.26	0.27	0.67	3.87	12.50	1.01	0.40	0.14	13244.47	0.04	0.05
Tanker Trips	2038	T7 Single	Aggregate	178	64655	8,513,625	23,325	3.47	20.21	63.73	5.28	2.07	0.73	76207.13	0.25	0.26	0.63	3.69	11.63	0.96	0.38	0.13	12620.53	0.04	0.04
Tanker Trips	2039	T7 Single	Aggregate	174	62395	8,249,365	22,601	3.35	19.55	60.31	5.11	2.00	0.70	73718.50	0.24	0.25	0.61	3.57	11.01	0.93	0.36	0.13	12208.22	0.04	0.04
Tanker Trips	2040	T7 Single	Aggregate	168	60156	7,989,120	21,888	3.23	18.90	57.15	4.95	1.93	0.68	71278.32	0.23	0.25	0.59	3.45	10.43	0.90	0.35	0.12	11804.49	0.04	0.04
Tanker Trips	2041	T7 Single	Aggregate	162	58849	7,763,185	21,269	3.13	18.35	54.59	4.80	1.87	0.66	69178.48	0.23	0.24	0.57	3.35	9.96	0.88	0.34	0.12	11456.27	0.04	0.04
Tanker Trips	2042	T7 Single	Aggregate	158	56834	7,541,630	20,662	3.04	17.82	52.32	4.66	1.82	0.64	67135.00	0.22	0.23	0.55	3.25	9.55	0.85	0.33	0.12	11118.11	0.04	0.04
Tanker Trips	2043	T7 Single	Aggregate	152	55162	7,252,915	19,871	2.91	17.12	49.70	4.48	1.74	0.62	64503.45	0.21	0.22	0.53	3.12	9.07	0.82	0.32	0.11	10682.04	0.03	0.04
Tanker Trips	2044	T7 Single	Aggregate	148	53079	7,019,680	19,232	2.81	16.55	47.47	4.34	1.69	0.59	62362.14	0.20	0.22	0.51	3.02	8.66	0.79	0.31	0.11	10327.85	0.03	0.04
Tanker Trips	2045	T7 Single	Aggregate	144	51855	6,808,345	18,653	2.72	16.04	45.52	4.20	1.63	0.58	60431.08	0.20	0.21	0.50	2.93	8.31	0.77	0.30	0.11	10008.13	0.03	0.03
Tanker Trips	2046	T7 Single	Aggregate	138	49668	6,556,860	17,964	2.62	15.44	43.49	4.05	1.57	0.55	58158.67	0.19	0.20	0.48	2.82	7.94	0.74	0.29	0.10	9631.78	0.03	0.03
Tanker Trips	2047	T7 Single	Aggregate	134	47520	6,311,945	17,293	2.52	14.85	41.61	3.90	1.51	0.53	55955.89	0.18	0.19	0.46	2.71	7.59	0.71	0.28	0.10	9266.62	0.03	0.03
Tanker Trips	2048	T7 Single	Aggregate	126	45892	6,030,895	16,523	2.41	14.19	39.57	3.72	1.45	0.51	53437.48	0.17	0.19	0.44	2.59	7.22	0.68	0.26	0.09	8849.58	0.03	0.03
Tanker Trips	2049	T7 Single	Aggregate	108	39408	5,164,020	14,148	2.06	12.15	33.75	3.19	1.24	0.44	45734.44	0.15	0.16	0.38	2.22	6.16	0.58	0.23	0.08	7574.16	0.02	0.03
Tanker Trips	2050	T7 Single	Aggregate	106	37368	4,937,720	13,528	1.97	11.61	32.17	3.05	1.18	0.42	43729.85	0.14	0.15	0.36	2.12	5.87	0.56	0.22	0.08	7242.04	0.02	0.03

								Running								
EMFAC2014								ROC	CO	NOX	PM10	PM2.5	SOX	CO2	N2O*	CH4*
Source	Region	Calendar Year	Season	Vehical Class	Fuel	Model Year	Speed	(g/mile)	(g/mile)	(g/mile)	(g/mile)	(g/mile)	(g/mile)	(g/mile)	(g/mile)	(g/mile)
EMFAC2014	Santa Barbara County	2019	Annual Average	T7 Single	DSL	Aggregate	Aggregate	0.1636628	0.660751	6.414886	0.157711	0.092837	0.015984	1675.399782	0.0048	0.0051
EMFAC2014	Santa Barbara County	2019	Annual Average	LDT1	Gas	Aggregate	Aggregate	0.0387627	1.52672	0.173831	0.046887	0.019717	0.003154	313.4470189	0.0101	0.0157
EMFAC2014	Santa Barbara County	2020	Annual Average	T7 Single	DSL	Aggregate	Aggregate	0.1148527	0.484064	5.518897	0.12821	0.064612	0.015823	1658.524343	0.0048	0.0051
EMFAC2014	Santa Barbara County	2020	Annual Average	LDT1	Gas	Aggregate	Aggregate	0.0288839	1.286795	0.150631	0.046769	0.019607	0.003059	304.3027467	0.0101	0.0157
EMFAC2014	Santa Barbara County	2021	Annual Average	T7 Single	DSL	Aggregate	Aggregate	0.1099141	0.474056	4.907384	0.124539	0.0611	0.015654	1640.851415	0.0048	0.0051
EMFAC2014	Santa Barbara County	2021	Annual Average	LDT1	Gas	Aggregate	Aggregate	0.0255052	1.154666	0.135049	0.046696	0.019539	0.002954	293.9905879	0.0101	0.0157
EMFAC2014	Santa Barbara County	2022	Annual Average	T7 Single	DSL	Aggregate	Aggregate	0.1051088	0.465265	4.342103	0.120816	0.057538	0.015473	1621.847021	0.0048	0.0051
EMFAC2014	Santa Barbara County	2022	Annual Average	LDT1	Gas	Aggregate	Aggregate	0.0224845	1.037943	0.120919	0.046632	0.019481	0.002845	283.266169	0.0101	0.0157
EMFAC2014	Santa Barbara County	2023	Annual Average	T7 Single	DSL	Aggregate	Aggregate	0.0812015	0.422054	2.897532	0.112616	0.049692	0.01508	1580.668865	0.0048	0.0051
EMFAC2014	Santa Barbara County	2023	Annual Average	LDT1	Gas	Aggregate	Aggregate	0.0199349	0.938577	0.10853	0.046583	0.019436	0.002732	272.1746235	0.0101	0.0157
EMFAC2014	Santa Barbara County	2024	Annual Average	T7 Single	DSL	Aggregate	Aggregate	0.0793749	0.418489	2.652263	0.110973	0.048121	0.014975	1569.669812	0.0048	0.0051
EMFAC2014	Santa Barbara County	2024	Annual Average	LDT1	Gas	Aggregate	Aggregate	0.0176614	0.851947	0.097392	0.046533	0.01939	0.002619	260.925093	0.0101	0.0157
EMFAC2014	Santa Barbara County	2025	Annual Average	T7 Single	DSL	Aggregate	Aggregate	0.077885	0.415998	2.445556	0.109616	0.046823	0.014883	1560.007891	0.0048	0.0051
EMFAC2014	Santa Barbara County	2025	Annual Average	LDT1	Gas	Aggregate	Aggregate	0.0156101	0.769569	0.087434	0.046491	0.01935	0.002506	249.7566045	0.0101	0.0157
EMFAC2014	Santa Barbara County	2026	Annual Average	T7 Single	DSL	Aggregate	Aggregate	0.0764697	0.413351	2.264896	0.108431	0.045688	0.014795	1550.81095	0.0048	0.0051
EMFAC2014	Santa Barbara County	2026	Annual Average	LDT1	Gas	Aggregate	Aggregate	0.0135081	0.684354	0.078942	0.046388	0.019256	0.00239	238.3180815	0.0101	0.0157
EMFAC2014	Santa Barbara County	2027	Annual Average	T7 Single	DSL	Aggregate	Aggregate	0.0751427	0.410784	2.100237	0.107378	0.044681	0.014712	1542.065958	0.0048	0.0051
EMFAC2014	Santa Barbara County	2027	Annual Average	LDT1	Gas	Aggregate	Aggregate	0.0121065	0.62613	0.071649	0.046299	0.019174	0.002305	229.8673751	0.0101	0.0157
EMFAC2014	Santa Barbara County	2028	Annual Average	T7 Single	DSL	Aggregate	Aggregate	0.0740744	0.40917	1.959561	0.106514	0.043854	0.014641	1534.665984	0.0048	0.0051
EMFAC2014	Santa Barbara County	2028	Annual Average	LDT1	Gas	Aggregate	Aggregate	0.010912	0.575279	0.064872	0.046176	0.019062	0.002231	222.5444689	0.0101	0.0157
EMFAC2014	Santa Barbara County	2029	Annual Average	T7 Single	DSL	Aggregate	Aggregate	0.073108	0.407483	1.840157	0.105802	0.043173	0.014574	1527.632291	0.0048	0.0051
EMFAC2014	Santa Barbara County	2029	Annual Average	LDT1	Gas	Aggregate	Aggregate	0.0096278	0.521417	0.057733	0.046058	0.018952	0.002167	216.1887271	0.0101	0.0157
EMFAC2014	Santa Barbara County	2030	Annual Average	T7 Single	DSL	Aggregate	Aggregate	0.0721018	0.405074	1.729324	0.105148	0.042548	0.014503	1520.118871	0.0048	0.0051
EMFAC2014	Santa Barbara County	2030	Annual Average	LDT1	Gas	Aggregate	Aggregate	0.0085476	0.47639	0.051429	0.045951	0.018855	0.002111	210.7461696	0.0101	0.0157
EMFAC2014	Santa Barbara County	2031	Annual Average	T7 Single	DSL	Aggregate	Aggregate	0.0713302	0.403472	1.637517	0.104676	0.042096	0.01444	1513.53024	0.0048	0.0051
EMFAC2014	Santa Barbara County	2031	Annual Average	LDT1	Gas	Aggregate	Aggregate	0.0073952	0.428641	0.044421	0.045848	0.01876	0.002064	206.0580998	0.0101	0.0157
EMFAC2014	Santa Barbara County	2032	Annual Average	T7 Single	DSL	Aggregate	Aggregate	0.0705801	0.401663	1.554133	0.104231	0.04167	0.014383	1507.592376	0.0048	0.0051
EMFAC2014	Santa Barbara County	2032	Annual Average	LDT1	Gas	Aggregate	Aggregate	0.0064795	0.390665	0.0389	0.04576	0.018679	0.002024	202.1174592	0.0101	0.0157
EMFAC2014	Santa Barbara County	2033	Annual Average	T7 Single	DSL	Aggregate	Aggregate	0.0698428	0.399515	1.478982	0.103851	0.041306	0.014327	1501.656346	0.0048	0.0051
EMFAC2014	Santa Barbara County	2033	Annual Average	LDT1	Gas	Aggregate	Aggregate	0.0057611	0.361019	0.034634	0.045685	0.01861	0.00199	198.8103021	0.0101	0.0157
EMFAC2014	Santa Barbara County	2034	Annual Average	T7 Single	DSL	Aggregate	Aggregate	0.0691737	0.397525	1.411882	0.10352	0.04099	0.014275	1496.275725	0.0048	0.0051
EMFAC2014	Santa Barbara County	2034	Annual Average	LDT1	Gas	Aggregate	Aggregate	0.0051019	0.333818	0.031441	0.045618	0.018548	0.001962	196.0086803	0.0101	0.0157
EMFAC2014	Santa Barbara County	2035	Annual Average	T7 Single	DSL	Aggregate	Aggregate	0.0685879	0.395786	1.354737	0.103226	0.040709	0.014232	1491.758828	0.0048	0.0051
EMFAC2014	Santa Barbara County	2035	Annual Average	LDT1	Gas	Aggregate	Aggregate	0.0046397	0.314325	0.029582	0.045563	0.018497	0.001939	193.7120533	0.0101	0.0157
EMFAC2014	Santa Barbara County	2036	Annual Average	T7 Single	DSL	Aggregate	Aggregate	0.0681713	0.394717	1.311058	0.103051	0.040541	0.014197	1488.066227	0.0048	0.0051
EMFAC2014	Santa Barbara County	2036	Annual Average	LDT1	Gas	Aggregate	Aggregate	0.0042155	0.297206	0.027937	0.045517	0.018456	0.001919	191.7885367	0.0101	0.0157
EMFAC2014	Santa Barbara County	2037	Annual Average	T7 Single	DSL	Aggregate	Aggregate	0.0677995	0.393766	1.271732	0.102888	0.040386	0.014165	1484.77282	0.0048	0.0051
EMFAC2014	Santa Barbara County	2037	Annual Average	LDT1	Gas	Aggregate	Aggregate	0.0039374	0.284765	0.026759	0.045479	0.01842	0.001903	190.2272576	0.0101	0.0157
EMFAC2014	Santa Barbara County	2038	Annual Average	T7 Single	DSL	Aggregate	Aggregate	0.0675066	0.393069	1.239263	0.102747	0.040251	0.014139	1481.973671	0.0048	0.0051
EMFAC2014	Santa Barbara County	2038	Annual Average	LDT1	Gas	Aggregate	Aggregate	0.0037235	0.275967	0.025795	0.045446	0.01839	0.001891	188.9482978	0.0101	0.0157
EMFAC2014	Santa Barbara County	2039	Annual Average	T7 Single	DSL	Aggregate	Aggregate	0.067245	0.392449	1.210408	0.102624	0.040133	0.014115	1479.480341	0.0048	0.0051
EMFAC2014	Santa Barbara County	2039	Annual Average	LDT1	Gas	Aggregate	Aggregate	0.0035636	0.269137	0.025074	0.045417	0.018363	0.00188	187.8894031	0.0101	0.0157
EMFAC2014	Santa Barbara County	2040	Annual Average	T7 Single	DSL	Aggregate	Aggregate	0.0669816	0.391737	1.184391	0.102517	0.040031	0.014093	1477.153206	0.0048	0.0051
EMFAC2014	Santa Barbara County	2040	Annual Average	LDT1	Gas	Aggregate	Aggregate	0.0034568	0.264045	0.024561	0.045394	0.018342	0.001871	187.0368744	0.0101	0.0157
EMFAC2014	Santa Barbara County	2041	Annual Average	T7 Single	DSL	Aggregate	Aggregate	0.0667893	0.391323	1.164092	0.102432	0.039949	0.014075	1475.301028	0.0048	0.0051
EMFAC2014	Santa Barbara County	2041	Annual Average	LDT1	Gas	Aggregate	Aggregate	0.0033827	0.259783	0.024153	0.045376	0.018325	0.001864	186.3300062	0.0101	0.0157
EMFAC2014	Santa Barbara County	2042	Annual Average	T7 Single	DSL	Aggregate	Aggregate	0.0666533	0.391096	1.148571	0.102365	0.039885	0.014061	1473.81594	0.0048	0.0051
EMFAC2014	Santa Barbara County	2042	Annual Average	LDT1	Gas	Aggregate	Aggregate	0.0033224	0.256189	0.023825	0.04536	0.018311	0.001858	185.7512062	0.0101	0.0157
EMFAC2014	Santa Barbara County	2043	Annual Average	T7 Single	DSL	Aggregate	Aggregate	0.0665524	0.390809	1.134534	0.102308	0.03983	0.014047	1472.376455	0.0048	0.0051
EMFAC2014	Santa Barbara County	2043	Annual Average	LDT1	Gas	Aggregate	Aggregate	0.0032746	0.253181	0.023562	0.045348	0.0183	0.001853	185.2755526	0.0101	0.0157
EMFAC2014	Santa Barbara County	2044	Annual Average	T7 Single	DSL	Aggregate	Aggregate	0.0663737	0.390343	1.119698	0.102258	0.039783	0.014033	1470.855227	0.0048	0.0051
EMFAC2014	Santa Barbara County	2044	Annual Average	LDT1	Gas	Aggregate	Aggregate	0.0032415	0.250854	0.023377	0.045337	0.01829	0.00185	184.8982777	0.0101	0.0157
EMFAC2014	Santa Barbara County	2045	Annual Average	T7 Single	DSL	Aggregate	Aggregate	0.0662476	0.38998	1.106951	0.102217	0.039743	0.01402	1469.564258	0.0048	0.0051
EMFAC2014	Santa Barbara County	2045	Annual Average	LDT1	Gas	Aggregate	Aggregate	0.0032182	0.249029	0.023246	0.045329	0.018282	0.001847	184.5901046	0.0101	0.0157
EMFAC2014	Santa Barbara County	2046	Annual Average	T7 Single	DSL	Aggregate	Aggregate	0.0661629	0.389749	1.098155	0.102189	0.039716	0.014011	1468.546867	0.0048	0.0051
EMFAC2014	Santa Barbara County	2046	Annual Average	LDT1	Gas	Aggregate	Aggregate	0.0031981	0.24747	0.023127	0.045322	0.018276	0.001844	184.3320343	0.0101	0.0157
EMFAC2014	Santa Barbara County	2047	Annual Average	T7 Single	DSL	Aggregate	Aggregate	0.0661041	0.389595	1.091433	0.102168	0.039696	0.014002	1467.694082	0.0048	0.0051
EMFAC2014	Santa Barbara County	2047	Annual Average	LDT1	Gas	Aggregate	Aggregate	0.0031754	0.245791	0.022982	0.045316	0.018271	0.001841	184.082379	0.0101	0.0157
EMFAC2014	Santa Barbara County	2048	Annual Average	T7 Single	DSL	Aggregate	Aggregate	0.0660612	0.389495	1.086279	0.102151	0.03968	0.013995	1466.959407	0.0048	0.0051
EMFAC2014	Santa Barbara County	2048	Annual Average	LDT1	Gas	Aggregate	Aggregate	0.0031608	0.244712	0.022892	0.045312	0.018267	0.00184	183.897293	0.0101	0.0157
EMFAC2014	Santa Barbara County	2049	Annual Average	T7 Single	DSL	Aggregate	Aggregate	0.0660294	0.389408	1.081938	0.102138	0.039668	0.013989	1466.303215	0.0048	0.0051
EMFAC2014	Santa Barbara County	2049	Annual Average	LDT1	Gas	Aggregate	Aggregate	0.0031544	0.244277	0.022867	0.045309	0.018264	0.001838	183.7619091	0.0101	0.0157
EMFAC2014	Santa Barbara County	2050	Annual Average	T7 Single	DSL	Aggregate	Aggregate	0.0660117	0.389392	1.078579	0.102126	0.039657	0.013989	1466.263334	0.0048	0.0051
EMFAC2014	Santa Barbara County	2050	Annual Average	LDT1	Gas	Aggregate	Aggregate	0.0031507	0.244015	0.022853	0.045307	0.018263	0.001837	183.6685489	0.0101	0.0157

*CCAR General Reporting Protocol Version 3.1 January 2009

Mitigated Operating Tankers Emissions

Vehicle Fleet Mix 3 years old or newer

								Daily Emissions									Annual Emissions								
Process	Calendar Year	Vehicle Class	Model Year	Daily Trips	# Trips per Year	Annual miles	Daily Miles	ROC (lbs/day)	CO (lbs/day)	NOX (lbs/day)	PM10 (lbs/day)	PM2.5 (lbs/day)	SOX (lbs/day)	CO2 (lbs/day)	N2O (lbs/day)	CH4 (lbs/day)	ROC (tons/yr)	CO (tons/yr)	NOX (tons/yr)	PM10 (tons/yr)	PM2.5 (tons/yr)	SOX (tons/yr)	CO2 (tonne/yr)	N2O (tonne/yr)	CH4 (tonne/yr)
Tanker Trips	2019	T7 Single	2017-2019	54	19696	2,580,550	7,070	0.80	4.74	11.19	1.57	0.60	0.22	22815.22	0.07	0.08	0.15	0.86	2.04	0.29	0.11	0.04	3778.38	0.01	0.01
Tanker Trips	2020	T7 Single	2018-2020	76	26651	3,581,745	9,813	1.11	6.58	15.54	2.18	0.83	0.30	31667.01	0.10	0.11	0.20	1.20	2.84	0.40	0.15	0.06	5244.31	0.02	0.02
Tanker Trips	2021	T7 Single	2019-2021	88	31900	4,184,725	11,465	1.30	7.68	18.15	2.55	0.97	0.35	36998.10	0.12	0.13	0.24	1.40	3.31	0.46	0.18	0.06	6127.18	0.02	0.02
Tanker Trips	2022	T7 Single	2020-2022	90	32139	4,225,605	11,577	1.31	7.76	18.33	2.57	0.98	0.36	37359.53	0.12	0.13	0.24	1.42	3.35	0.47	0.18	0.07	6187.04	0.02	0.02
Tanker Trips	2023	T7 Single	2021-2023	94	33282	4,419,785	12,109	1.37	8.11	19.17	2.69	1.02	0.37	39076.31	0.13	0.14	0.25	1.48	3.50	0.49	0.19	0.07	6471.35	0.02	0.02
Tanker Trips	2024	T7 Single	2022-2024	144	51962	6,852,875	18,775	2.13	12.58	29.73	4.17	1.59	0.58	60587.81	0.20	0.21	0.39	2.30	5.43	0.76	0.29	0.11	10033.83	0.03	0.03
Tanker Trips	2025	T7 Single	2023-2025	166	60560	7,983,280	21,872	2.48	14.66	34.63	4.86	1.85	0.67	70581.98	0.23	0.25	0.45	2.67	6.32	0.89	0.34	0.12	11688.94	0.04	0.04
Tanker Trips	2026	T7 Single	2024-2026	182	65323	8,672,765	23,761	2.70	15.92	37.62	5.28	2.01	0.73	76677.87	0.25	0.27	0.49	2.91	6.87	0.96	0.37	0.13	12698.47	0.04	0.04
Tanker Trips	2027	T7 Single	2025-2027	186	67153	8,900,160	24,384	2.77	16.34	38.61	5.42	2.06	0.75	78688.32	0.26	0.27	0.51	2.98	7.05	0.99	0.38	0.14	13031.41	0.04	0.05
Tanker Trips	2028	T7 Single	2026-2028	198	71857	9,457,150	25,910	2.94	17.36	41.03	5.76	2.19	0.80	83612.79	0.27	0.29	0.54	3.17	7.49	1.05	0.40	0.15	13846.95	0.05	0.05
Tanker Trips	2029	T7 Single	2027-2029	202	72602	9,633,080	26,392	3.00	17.69	41.79	5.86	2.23	0.81	85168.23	0.28	0.30	0.55	3.23	7.63	1.07	0.41	0.15	14104.54	0.05	0.05
Tanker Trips	2030	T7 Single	2028-2030	200	71822	9,498,395	26,023	2.95	17.44	41.20	5.78	2.20	0.80	83977.45	0.28	0.29	0.54	3.18	7.52	1.06	0.40	0.15	13907.34	0.05	0.05
Tanker Trips	2031	T7 Single	2029-2031	188	68136	8,988,125	24,625	2.79	16.50	38.99	5.47	2.08	0.76	79466.04	0.26	0.28	0.51	3.01	7.12	1.00	0.38	0.14	13160.21	0.04	0.05
Tanker Trips	2032	T7 Single	2030-2032	184	66021	8,749,415	23,971	2.72	16.06	37.96	5.33	2.03	0.74	77355.55	0.25	0.27	0.50	2.93	6.93	0.97	0.37	0.13	12810.70	0.04	0.04
Tanker Trips	2033	T7 Single	2031-2033	184	66216	8,782,995	24,063	2.73	16.12	38.10	5.35	2.04	0.74	77652.44	0.25	0.27	0.50	2.94	6.95	0.98	0.37	0.14	12859.86	0.04	0.04
Tanker Trips	2034	T7 Single	2032-2034	184	66149	8,771,680	24,032	2.73	16.10	38.05	5.34	2.03	0.74	77552.40	0.25	0.27	0.50	2.94	6.94	0.97	0.37	0.14	12843.30	0.04	0.04
Tanker Trips	2035	T7 Single	2033-2035	184	66383	8,811,830	24,142	2.74	16.18	38.23	5.36	2.04	0.74	77907.37	0.26	0.27	0.50	2.95	6.98	0.98	0.37	0.14	12902.08	0.04	0.04
Tanker Trips	2036	T7 Single	2034-2036	188	68379	9,030,465	24,741	2.81	16.58	39.17	5.50	2.09	0.76	79840.37	0.26	0.28	0.51	3.03	7.15	1.00	0.38	0.14	13222.20	0.04	0.05
Tanker Trips	2037	T7 Single	2035-2037	186	67726	8,917,680	24,432	2.77	16.37	38.69	5.43	2.07	0.75	78843.22	0.26	0.27	0.51	2.99	7.06	0.99	0.38	0.14	13057.07	0.04	0.05
Tanker Trips	2038	T7 Single	2036-2038	178	64655	8,513,625	23,325	2.65	15.63	36.93	5.18	1.97	0.72	75270.88	0.25	0.26	0.48	2.85	6.74	0.95	0.36	0.13	12465.46	0.04	0.04
Tanker Trips	2039	T7 Single	2037-2039	174	62395	8,249,365	22,601	2.56	15.15	35.79	5.02	1.91	0.70	72934.49	0.24	0.25	0.47	2.76	6.53	0.92	0.35	0.13	12078.53	0.04	0.04
Tanker Trips	2040	T7 Single	2038-2040	168	60156	7,989,120	21,888	2.48	14.67	34.66	4.86	1.85	0.67	70633.61	0.23	0.25	0.45	2.68	6.32	0.89	0.34	0.12	11697.49	0.04	0.04
Tanker Trips	2041	T7 Single	2039-2041	162	58849	7,763,185	21,269	2.41	14.25	33.68	4.73	1.80	0.65	68636.07	0.23	0.24	0.44	2.60	6.15	0.86	0.33	0.12	11366.68	0.04	0.04
Tanker Trips	2042	T7 Single	2040-2042	158	56834	7,541,630	20,662	2.34	13.85	32.72	4.59	1.75	0.64	66677.25	0.22	0.23	0.43	2.53	5.97	0.84	0.32	0.12	11042.28	0.04	0.04
Tanker Trips	2043	T7 Single	2041-2043	152	55162	7,252,915	19,871	2.26	13.32	31.46	4.41	1.68	0.61	64124.65	0.21	0.22	0.41	2.43	5.74	0.81	0.31	0.11	10619.55	0.03	0.04
Tanker Trips	2044	T7 Single	2042-2044	148	53079	7,019,680	19,232	2.18	12.89	30.45	4.27	1.63	0.59	62062.57	0.20	0.22	0.40	2.35	5.56	0.78	0.30	0.11	10278.06	0.03	0.04
Tanker Trips	2045	T7 Single	2043-2045	144	51855	6,808,345	18,653	2.12	12.50	29.54	4.14	1.58	0.57	60194.11	0.20	0.21	0.39	2.28	5.39	0.76	0.29	0.10	9968.63	0.03	0.03
Tanker Trips	2046	T7 Single	2044-2046	138	49668	6,556,860	17,964	2.04	12.04	28.44	3.99	1.52	0.55	57970.68	0.19	0.20	0.37	2.20	5.19	0.73	0.28	0.10	9600.41	0.03	0.03
Tanker Trips	2047	T7 Single	2045-2047	134	47520	6,311,945	17,293	1.96	11.59	27.38	3.84	1.46	0.53	55805.33	0.18	0.19	0.36	2.11	5.00	0.70	0.27	0.10	9241.81	0.03	0.03
Tanker Trips	2048	T7 Single	2046-2048	126	45892	6,030,895	16,523	1.88	11.07	26.16	3.67	1.40	0.51	53320.50	0.17	0.19	0.34	2.02	4.77	0.67	0.26	0.09	8830.30	0.03	0.03
Tanker Trips	2049	T7 Single	2047-2049	108	39408	5,164,020	14,148	1.61	9.48	22.40	3.14	1.20	0.44	45656.26	0.15	0.16	0.29	1.73	4.09	0.57	0.22	0.08	7561.04	0.02	0.03
Tanker Trips	2050	T7 Single	2048-2050	106	37368	4,937,720	13,528	1.54	9.07	21.42	3.01	1.14	0.42	43655.49	0.14	0.15	0.28	1.65	3.91	0.55	0.21	0.08	7229.70	0.02	0.03

								Running								
EMFAC2014								ROC	CO	NOX	PM10	PM2.5	SOX	CO2	N2O*	CH4*
Source	Region	Calendar Year	Season	Vehical Class	Fuel	Model Year	Speed	(g/mile)	(g/mile)	(g/mile)	(g/mile)	(g/mile)	(g/mile)	(g/mile)	(g/mile)	(g/mile)
EMFAC2014	Santa Barbara County	2019	Annual Average	T7 Single	DSL	2017-2019	Aggregate	0.0514763	0.303956	0.718216	0.100777	0.038365	0.013965	1463.764074	0.0048	0.0051
EMFAC2014	Santa Barbara County	2020	Annual Average	T7 Single	DSL	2018-2020	Aggregate	0.0514763	0.303956	0.718216	0.100777	0.038365	0.013965	1463.764074	0.0048	0.0051
EMFAC2014	Santa Barbara County	2021	Annual Average	T7 Single	DSL	2019-2021	Aggregate	0.0514763	0.303956	0.718216	0.100777	0.038365	0.013965	1463.764074	0.0048	0.0051
EMFAC2014	Santa Barbara County	2022	Annual Average	T7 Single	DSL	2020-2022	Aggregate	0.0514763	0.303956	0.718216	0.100777	0.038365	0.013965	1463.764074	0.0048	0.0051
EMFAC2014	Santa Barbara County	2023	Annual Average	T7 Single	DSL	2021-2023	Aggregate	0.0514763	0.303956	0.718216	0.100777	0.038365	0.013965	1463.764074	0.0048	0.0051
EMFAC2014	Santa Barbara County	2024	Annual Average	T7 Single	DSL	2022-2024	Aggregate	0.0514763	0.303956	0.718216	0.100777	0.038365	0.013965	1463.764074	0.0048	0.0051
EMFAC2014	Santa Barbara County	2025	Annual Average	T7 Single	DSL	2023-2025	Aggregate	0.0514763	0.303956	0.718216	0.100777	0.038365	0.013965	1463.764074	0.0048	0.0051
EMFAC2014	Santa Barbara County	2026	Annual Average	T7 Single	DSL	2024-2026	Aggregate	0.0514763	0.303956	0.718216	0.100777	0.038365	0.013965	1463.764074	0.0048	0.0051
EMFAC2014	Santa Barbara County	2027	Annual Average	T7 Single	DSL	2025-2027	Aggregate	0.0514763	0.303956	0.718216	0.100777	0.038365	0.013965	1463.764074	0.0048	0.0051
EMFAC2014	Santa Barbara County	2028	Annual Average	T7 Single	DSL	2026-2028	Aggregate	0.0514763	0.303956	0.718216	0.100777	0.038365	0.013965	1463.764074	0.0048	0.0051
EMFAC2014	Santa Barbara County	2029	Annual Average	T7 Single	DSL	2027-2029	Aggregate	0.0514763	0.303956	0.718216	0.100777	0.038365	0.013965	1463.764074	0.0048	0.0051
EMFAC2014	Santa Barbara County	2030	Annual Average	T7 Single	DSL	2028-2030	Aggregate	0.0514763	0.303956	0.718216	0.100777	0.038365	0.013965	1463.764074	0.0048	0.0051
EMFAC2014	Santa Barbara County	2031	Annual Average	T7 Single	DSL	2029-2031	Aggregate	0.0514763	0.303956	0.718216	0.100777	0.038365	0.013965	1463.764074	0.0048	0.0051
EMFAC2014	Santa Barbara County	2032	Annual Average	T7 Single	DSL	2030-2032	Aggregate	0.0514763	0.303956	0.718216	0.100777	0.038365	0.013965	1463.764074	0.0048	0.0051
EMFAC2014	Santa Barbara County	2033	Annual Average	T7 Single	DSL	2031-2033	Aggregate	0.0514763	0.303956	0.718216	0.100777	0.038365	0.013965	1463.764074	0.0048	0.0051
EMFAC2014	Santa Barbara County	2034	Annual Average	T7 Single	DSL	2032-2034	Aggregate	0.0514763	0.303956	0.718216	0.100777	0.038365	0.013965	1463.764074	0.0048	0.0051
EMFAC2014	Santa Barbara County	2035	Annual Average	T7 Single	DSL	2033-2035	Aggregate	0.0514763	0.303956	0.718216	0.100777	0.038365	0.013965	1463.764074	0.0048	0.0051
EMFAC2014	Santa Barbara County	2036	Annual Average	T7 Single	DSL	2034-2036	Aggregate	0.0514763	0.303956	0.718216	0.100777	0.038365	0.013965	1463.764074	0.0048	0.0051
EMFAC2014	Santa Barbara County	2037	Annual Average	T7 Single	DSL	2035-2037	Aggregate	0.0514763	0.303956	0.718216	0.100777	0.038365	0.013965	1463.764074	0.0048	0.0051
EMFAC2014	Santa Barbara County	2038	Annual Average	T7 Single	DSL	2036-2038	Aggregate	0.0514763	0.303956	0.718216	0.100777	0.038365	0.013965	1463.764074	0.0048	0.0051
EMFAC2014	Santa Barbara County	2039	Annual Average	T7 Single	DSL	2037-2039	Aggregate	0.0514763	0.303956	0.718216	0.100777	0.038365	0.013965	1463.764074	0.0048	0.0051
EMFAC2014	Santa Barbara County	2040	Annual Average	T7 Single	DSL	2038-2040	Aggregate	0.0514763	0.303956	0.718216	0.100777	0.038365	0.013965	1463.764074	0.0048	0.0051
EMFAC2014	Santa Barbara County	2041	Annual Average	T7 Single	DSL	2039-2041	Aggregate	0.0514763	0.303956	0.718216	0.100777	0.038365	0.013965	1463.764074	0.0048	0.0051
EMFAC2014	Santa Barbara County	2042	Annual Average	T7 Single	DSL	2040-2042	Aggregate	0.0514763	0.303956	0.718216	0.100777	0.038365	0.013965	1463.764074	0.0048	0.0051
EMFAC2014	Santa Barbara County	2043	Annual Average	T7 Single	DSL	2041-2043	Aggregate	0.0514763	0.303956	0.718216	0.100777	0.038365	0.013965	1463.764074	0.0048	0.0051
EMFAC2014	Santa Barbara County	2044	Annual Average	T7 Single	DSL	2042-2044	Aggregate	0.0514763	0.303956	0.718216	0.100777	0.038365	0.013965	1463.764074	0.0048	0.0051
EMFAC2014	Santa Barbara County	2045	Annual Average	T7 Single	DSL	2043-2045	Aggregate	0.0514763	0.303956	0.718216	0.100777	0.038365	0.013965	1463.764074	0.0048	0.0051
EMFAC2014	Santa Barbara County	2046	Annual Average	T7 Single	DSL	2044-2046	Aggregate	0.0514763	0.303956	0.718216	0.100777	0.038365	0.013965	1463.764074	0.0048	0.0051
EMFAC2014	Santa Barbara County	2047	Annual Average	T7 Single	DSL	2045-2047	Aggregate	0.0514763	0.303956	0.718216	0.100777	0.038365	0.013965	1463.764074	0.0048	0.0051
EMFAC2014	Santa Barbara County	2048	Annual Average	T7 Single	DSL	2046-2048	Aggregate	0.0514763	0.303956	0.718216	0.100777	0.038365	0.013965	1463.764074	0.0048	0.0051
EMFAC2014	Santa Barbara County	2049	Annual Average	T7 Single	DSL	2047-2049	Aggregate	0.0514763	0.303956	0.718216	0.100777	0.038365	0.013965	1463.764074	0.0048	0.0051
EMFAC2014	Santa Barbara County	2050	Annual Average	T7 Single	DSL	2048-2050	Aggregate	0.0514763	0.303956	0.718216	0.100777	0.038365	0.013965	1463.764074	0.0048	0.0051

*CCAR General Reporting Protocol Version 3.1 January 2009

Operational Fugitive Dust Emission Calculations
Unmitigated

Year	Activity/Source	Max Source	Source Units	Average Source	Source Units	Emissions Factor	lbs/Day		Tons/Year	
							PM10	PM2.5	PM10	PM2.5
-1	Unpaved Misc. Trips (HHDT)	1.4	miles/day	188.94	miles/year	CalEEMod	45.66	4.56	6.490	0.648
-1	Unpaved Misc. Truck Trips (HHTD)	4.7	miles/day	532.98	miles/year	CalEEMod	Incl. w/ Misc Trips			
-1	Unpaved 12 Hr. Employees (LD Mix)	42.1	miles/day	15,373.80	miles/year	CalEEMod	250.37	24.99	41.061	4.098
-1	Unpaved 9/80 Employees (LD Mix)	128.0	miles/day	46,712.70	miles/year	CalEEMod	Incl. w/ 12 Hr Employee Trips			
-1	Unpaved Tankering Trips (HHTD)	24.9	miles/day	9,092.15	miles/year	CalEEMod	Incl. w/ Misc Trips			
1	Unpaved Misc. Trips (HHDT)	2.4	miles/day	255.21	miles/year	CalEEMod	62.27	6.22	8.920	0.891
1	Unpaved Misc. Truck Trips (HHTD)	4.7	miles/day	532.98	miles/year	CalEEMod	Incl. w/ Misc Trips			
1	Unpaved 12 Hr. Employees (LD Mix)	42.1	miles/day	15,373.80	miles/year	CalEEMod	250.37	24.99	41.061	4.098
1	Unpaved 9/80 Employees (LD Mix)	128.0	miles/day	46,712.70	miles/year	CalEEMod	Incl. w/ 12 Hr Employee Trips			
1	Unpaved Tankering Trips (HHTD)	34.8	miles/day	12,694.70	miles/year	CalEEMod	Incl. w/ Misc Trips			
2	Unpaved Misc. Trips (HHDT)	2.4	miles/day	269.31	miles/year	CalEEMod	69.88	6.98	10.291	1.027
2	Unpaved Misc. Truck Trips (HHTD)	4.7	miles/day	532.98	miles/year	CalEEMod	Incl. w/ Misc Trips			
2	Unpaved 12 Hr. Employees (LD Mix)	42.1	miles/day	15,373.80	miles/year	CalEEMod	250.37	24.99	41.061	4.098
2	Unpaved 9/80 Employees (LD Mix)	128.0	miles/day	46,712.70	miles/year	CalEEMod	Incl. w/ 12 Hr Employee Trips			
2	Unpaved Tankering Trips (HHTD)	40.4	miles/day	14,753.30	miles/year	CalEEMod	Incl. w/ Misc Trips			
3	Unpaved Misc. Trips (HHDT)	2.4	miles/day	269.78	miles/year	CalEEMod	70.57	7.04	10.405	1.039
3	Unpaved Misc. Truck Trips (HHTD)	4.7	miles/day	532.98	miles/year	CalEEMod	Incl. w/ Misc Trips			
3	Unpaved 12 Hr. Employees (LD Mix)	42.1	miles/day	15,373.80	miles/year	CalEEMod	250.37	24.99	41.061	4.098
3	Unpaved 9/80 Employees (LD Mix)	128.0	miles/day	46,712.70	miles/year	CalEEMod	Incl. w/ 12 Hr Employee Trips			
3	Unpaved Tankering Trips (HHTD)	40.9	miles/day	14,924.85	miles/year	CalEEMod	Incl. w/ Misc Trips			
4	Unpaved Misc. Trips (HHDT)	2.4	miles/day	271.66	miles/year	CalEEMod	73.34	7.32	10.859	1.084
4	Unpaved Misc. Truck Trips (HHTD)	4.7	miles/day	532.98	miles/year	CalEEMod	Incl. w/ Misc Trips			
4	Unpaved 12 Hr. Employees (LD Mix)	42.1	miles/day	15,373.80	miles/year	CalEEMod	250.37	24.99	41.061	4.098
4	Unpaved 9/80 Employees (LD Mix)	128.0	miles/day	46,712.70	miles/year	CalEEMod	Incl. w/ 12 Hr Employee Trips			
4	Unpaved Tankering Trips (HHTD)	42.8	miles/day	15,611.05	miles/year	CalEEMod	Incl. w/ Misc Trips			
5	Unpaved Misc. Trips (HHDT)	2.8	miles/day	333.23	miles/year	CalEEMod	109.31	10.91	16.680	1.665
5	Unpaved Misc. Truck Trips (HHTD)	4.7	miles/day	532.98	miles/year	CalEEMod	Incl. w/ Misc Trips			
5	Unpaved 12 Hr. Employees (LD Mix)	42.1	miles/day	15,373.80	miles/year	CalEEMod	250.37	24.99	41.061	4.098
5	Unpaved 9/80 Employees (LD Mix)	128.0	miles/day	46,712.70	miles/year	CalEEMod	Incl. w/ 12 Hr Employee Trips			
5	Unpaved Tankering Trips (HHTD)	66.7	miles/day	24,360.10	miles/year	CalEEMod	Incl. w/ Misc Trips			
6	Unpaved Misc. Trips (HHDT)	3.3	miles/day	365.66	miles/year	CalEEMod	125.92	12.57	19.312	1.928
6	Unpaved Misc. Truck Trips (HHTD)	4.7	miles/day	532.98	miles/year	CalEEMod	Incl. w/ Misc Trips			
6	Unpaved 12 Hr. Employees (LD Mix)	42.1	miles/day	15,373.80	miles/year	CalEEMod	250.37	24.99	41.061	4.098
6	Unpaved 9/80 Employees (LD Mix)	128.0	miles/day	46,712.70	miles/year	CalEEMod	Incl. w/ 12 Hr Employee Trips			
6	Unpaved Tankering Trips (HHTD)	77.6	miles/day	28,305.75	miles/year	CalEEMod	Incl. w/ Misc Trips			
7	Unpaved Misc. Trips (HHDT)	3.3	miles/day	377.41	miles/year	CalEEMod	135.60	13.54	20.912	2.088
7	Unpaved Misc. Truck Trips (HHTD)	4.7	miles/day	532.98	miles/year	CalEEMod	Incl. w/ Misc Trips			
7	Unpaved 12 Hr. Employees (LD Mix)	42.1	miles/day	15,373.80	miles/year	CalEEMod	250.37	24.99	41.061	4.098
7	Unpaved 9/80 Employees (LD Mix)	128.0	miles/day	46,712.70	miles/year	CalEEMod	Incl. w/ 12 Hr Employee Trips			
7	Unpaved Tankering Trips (HHTD)	84.1	miles/day	30,707.45	miles/year	CalEEMod	Incl. w/ Misc Trips			
8	Unpaved Misc. Trips (HHDT)	3.3	miles/day	390.57	miles/year	CalEEMod	139.06	13.88	21.491	2.145
8	Unpaved Misc. Truck Trips (HHTD)	4.7	miles/day	532.98	miles/year	CalEEMod	Incl. w/ Misc Trips			
8	Unpaved 12 Hr. Employees (LD Mix)	42.1	miles/day	15,373.80	miles/year	CalEEMod	250.37	24.99	41.061	4.098
8	Unpaved 9/80 Employees (LD Mix)	128.0	miles/day	46,712.70	miles/year	CalEEMod	Incl. w/ 12 Hr Employee Trips			
8	Unpaved Tankering Trips (HHTD)	86.5	miles/day	31,565.20	miles/year	CalEEMod	Incl. w/ Misc Trips			
9	Unpaved Misc. Trips (HHDT)	3.3	miles/day	400.91	miles/year	CalEEMod	147.37	14.71	22.858	2.282
9	Unpaved Misc. Truck Trips (HHTD)	4.7	miles/day	532.98	miles/year	CalEEMod	Incl. w/ Misc Trips			
9	Unpaved 12 Hr. Employees (LD Mix)	42.1	miles/day	15,373.80	miles/year	CalEEMod	250.37	24.99	41.061	4.098
9	Unpaved 9/80 Employees (LD Mix)	128.0	miles/day	46,712.70	miles/year	CalEEMod	Incl. w/ 12 Hr Employee Trips			
9	Unpaved Tankering Trips (HHTD)	92.1	miles/day	33,623.80	miles/year	CalEEMod	Incl. w/ Misc Trips			
10	Unpaved Misc. Trips (HHDT)	3.8	miles/day	401.85	miles/year	CalEEMod	150.13	14.99	23.193	2.315
10	Unpaved Misc. Truck Trips (HHTD)	4.7	miles/day	532.98	miles/year	CalEEMod	Incl. w/ Misc Trips			
10	Unpaved 12 Hr. Employees (LD Mix)	42.1	miles/day	15,373.80	miles/year	CalEEMod	250.37	24.99	41.061	4.098
10	Unpaved 9/80 Employees (LD Mix)	128.0	miles/day	46,712.70	miles/year	CalEEMod	Incl. w/ 12 Hr Employee Trips			
10	Unpaved Tankering Trips (HHTD)	93.5	miles/day	34,138.45	miles/year	CalEEMod	Incl. w/ Misc Trips			
11	Unpaved Misc. Trips (HHDT)	3.3	miles/day	400.91	miles/year	CalEEMod	148.06	14.78	22.966	2.293
11	Unpaved Misc. Truck Trips (HHTD)	4.7	miles/day	532.98	miles/year	CalEEMod	Incl. w/ Misc Trips			
11	Unpaved 12 Hr. Employees (LD Mix)	42.1	miles/day	15,373.80	miles/year	CalEEMod	250.37	24.99	41.061	4.098
11	Unpaved 9/80 Employees (LD Mix)	128.0	miles/day	46,712.70	miles/year	CalEEMod	Incl. w/ 12 Hr Employee Trips			
11	Unpaved Tankering Trips (HHTD)	92.6	miles/day	33,795.35	miles/year	CalEEMod	Incl. w/ Misc Trips			
12	Unpaved Misc. Trips (HHDT)	3.3	miles/day	390.57	miles/year	CalEEMod	140.45	14.02	21.718	2.168
12	Unpaved Misc. Truck Trips (HHTD)	4.7	miles/day	532.98	miles/year	CalEEMod	Incl. w/ Misc Trips			
12	Unpaved 12 Hr. Employees (LD Mix)	42.1	miles/day	15,373.80	miles/year	CalEEMod	250.37	24.99	41.061	4.098
12	Unpaved 9/80 Employees (LD Mix)	128.0	miles/day	46,712.70	miles/year	CalEEMod	Incl. w/ 12 Hr Employee Trips			
12	Unpaved Tankering Trips (HHTD)	87.4	miles/day	31,908.30	miles/year	CalEEMod	Incl. w/ Misc Trips			
13	Unpaved Misc. Trips (HHDT)	3.3	miles/day	388.22	miles/year	CalEEMod	136.99	13.67	21.151	2.112
13	Unpaved Misc. Truck Trips (HHTD)	4.7	miles/day	532.98	miles/year	CalEEMod	Incl. w/ Misc Trips			
13	Unpaved 12 Hr. Employees (LD Mix)	42.1	miles/day	15,373.80	miles/year	CalEEMod	250.37	24.99	41.061	4.098
13	Unpaved 9/80 Employees (LD Mix)	128.0	miles/day	46,712.70	miles/year	CalEEMod	Incl. w/ 12 Hr Employee Trips			
13	Unpaved Tankering Trips (HHTD)	85.1	miles/day	31,050.55	miles/year	CalEEMod	Incl. w/ Misc Trips			
14	Unpaved Misc. Trips (HHDT)	3.3	miles/day	394.33	miles/year	CalEEMod	137.68	13.74	21.264	2.123
14	Unpaved Misc. Truck Trips (HHTD)	4.7	miles/day	532.98	miles/year	CalEEMod	Incl. w/ Misc Trips			
14	Unpaved 12 Hr. Employees (LD Mix)	42.1	miles/day	15,373.80	miles/year	CalEEMod	250.37	24.99	41.061	4.098
14	Unpaved 9/80 Employees (LD Mix)	128.0	miles/day	46,712.70	miles/year	CalEEMod	Incl. w/ 12 Hr Employee Trips			
14	Unpaved Tankering Trips (HHTD)	85.5	miles/day	31,222.10	miles/year	CalEEMod	Incl. w/ Misc Trips			
15	Unpaved Misc. Trips (HHDT)	3.3	miles/day	394.33	miles/year	CalEEMod	136.99	13.67	21.150	2.111
15	Unpaved Misc. Truck Trips (HHTD)	4.7	miles/day	532.98	miles/year	CalEEMod	Incl. w/ Misc Trips			
15	Unpaved 12 Hr. Employees (LD Mix)	42.1	miles/day	15,373.80	miles/year	CalEEMod	250.37	24.99	41.061	4.098
15	Unpaved 9/80 Employees (LD Mix)	128.0	miles/day	46,712.70	miles/year	CalEEMod	Incl. w/ 12 Hr Employee Trips			
15	Unpaved Tankering Trips (HHTD)	85.1	miles/day	31,050.55	miles/year	CalEEMod	Incl. w/ Misc Trips			
16	Unpaved Misc. Trips (HHDT)	3.3	miles/day	400.44	miles/year	CalEEMod	137.68	13.74	21.264	2.123
16	Unpaved Misc. Truck Trips (HHTD)	4.7	miles/day	532.98	miles/year	CalEEMod	Incl. w/ Misc Trips			
16	Unpaved 12 Hr. Employees (LD Mix)	42.1	miles/day	15,373.80	miles/year	CalEEMod	250.37	24.99	41.061	4.098
16	Unpaved 9/80 Employees (LD Mix)	128.0	miles/day	46,712.70	miles/year	CalEEMod	Incl. w/ 12 Hr Employee Trips			
16	Unpaved Tankering Trips (HHTD)	85.5	miles/day	31,222.10	miles/year	CalEEMod	Incl. w/ Misc Trips			
17	Unpaved Misc. Trips (HHDT)	3.3	miles/day	396.68	miles/year	CalEEMod	141.12	14.08	21.830	2.178
17	Unpaved Misc. Truck Trips (HHTD)	4.7	miles/day	532.98	miles/year	CalEEMod	Incl. w/ Misc Trips			
17	Unpaved 12 Hr. Employees (LD Mix)	42.1	miles/day	15,373.80	miles/year	CalEEMod	250.37	24.99	41.061	4.098
17	Unpaved 9/80 Employees (LD Mix)	128.0	miles/day	46,712.70	miles/year	CalEEMod	Incl. w/ 12 Hr Employee Trips			
17	Unpaved Tankering Trips (HHTD)	87.9	miles/day	32,079.85	miles/year	CalEEMod	Incl. w/ Misc Trips			
18	Unpaved Misc. Trips (HHDT)	3.8	miles/day	407.02	miles/year	CalEEMod	139.73	13.94	21.498	2.145
18	Unpaved Misc. Truck Trips (HHTD)	4.7	miles/day	532.98	miles/year	CalEEMod	Incl. w/ Misc Trips			
18	Unpaved 12 Hr. Employees (LD Mix)	42.1	miles/day	15,373.80	miles/year	CalEEMod	250.37	24.99	41.061	4.098
18	Unpaved 9/80 Employees (LD Mix)	128.0	miles/day	46,712.70	miles/year	CalEEMod	Incl. w/ 12 Hr Employee Trips			
18	Unpaved Tankering Trips (HHTD)	86.5	miles/day	31,565.20	miles/year	CalEEMod	Incl. w/ Misc Trips			
19	Unpaved Misc. Trips (HHDT)	3.8	miles/day	403.26	miles/year	CalEEMod	134.20	13.39	20.590	2.055
19	Unpaved Misc. Truck Trips (HHTD)	4.7	miles/day	532.98	miles/year	CalEEMod	Incl. w/ Misc Trips			
19	Unpaved 12 Hr. Employees (LD Mix)	42.1	miles/day	15,373.80	miles/year	CalEEMod	250.37	24.99	41.061	4.098
19	Unpaved 9/80 Employees (LD Mix)	128.0	miles/day	46,712.70	miles/year	CalEEMod	Incl. w/ 12 Hr Employee Trips			
19	Unpaved Tankering Trips (HHTD)	82.7	miles/day	30,192.80	miles/year	CalEEMod	Incl. w/ Misc Trips			
20	Unpaved Misc. Trips (HHDT)	3.8	miles/day	403.26	miles/year	CalEEMod	130.74	13.05	20.023	1.998
20	Unpaved Misc. Truck Trips (HHTD)	4.7	miles/day	532.98	miles/year	CalEEMod	Incl. w/ Misc Trips			
20	Unpaved 12 Hr. Employees (LD Mix)	42.1	miles/day	15,373.80	miles/year	CalEEMod	250.37	24.99	41.061	4.098
20	Unpaved 9/80 Employees (LD Mix)	128.0	miles/day	46,712.70	miles/year	CalEEMod	Incl. w/ 12 Hr Employee Trips			
20	Unpaved Tankering Trips (HHTD)	80.4	miles/day	29,335.05	miles/year	CalEEMod	Incl. w/ Misc Trips			
21	Unpaved Misc. Trips (HHDT)	3.3	miles/day	389.63	miles/year	CalEEMod	125.90	12.56	19.327	1.929
21	Unpaved Misc. Truck Trips (HHTD)	4.7	miles/day	532.98	miles/year	CalEEMod	Incl. w/ Misc Trips			
21	Unpaved 12 Hr. Employees (LD Mix)	42.1	miles/day	15,373.80	miles/year	CalEEMod	250.37	24.99	41.061	4.098
21	Unpaved 9/80 Employees (LD Mix)	128.0	miles/day	46,712.70	miles/year	CalEEMod	Incl. w/ 12 Hr Employee Trips			
21	Unpaved Tankering Trips (HHTD)	77.6	miles/day	28,305.75	miles/year	CalEEMod	Incl. w/ Misc Trips			
22	Unpaved Misc. Trips (HHDT)	3.3	miles/day	381.64	miles/year	CalEEMod	123.13	12.29	18.866	1.882
22	Unpaved Misc. Truck Trips (HHTD)	4.7	miles/day	532.98	miles/year	CalEEMod	Incl. w/ Misc Trips			
22	Unpaved 12 Hr. Employees (LD Mix)	42.1	miles/day	15,373.80	miles/year	CalEEMod	250.37	24.99	41.061	4.098
22	Unpaved 9/80 Employees (LD Mix)	128.0	miles/day	46,712.70	miles/year	CalEEMod	Incl. w/ 12 Hr Employee Trips			
22	Unpaved Tankering Trips (HHTD)	75.7	miles/day	27,619.55	miles/year	CalEEMod	Incl. w/ Misc Trips			
23	Unpaved Misc. Trips (HHDT)	3.3	miles/day	362.84	miles/year	CalEEMod	119.67	11.94	18.287	1.825
23	Unpaved Misc. Truck Trips (HHTD)	4.7	miles/day	532.98	miles/year	CalEEMod	Incl. w/ Misc Trips			
23	Unpaved 12 Hr. Employees (LD Mix)	42.1	miles/day	15,373.80	miles/year	CalEEMod	250.37	24.99	41.061	4.098
23	Unpaved 9/80 Employees (LD Mix)	128.0	miles/day	46,712.70	miles/year	CalEEMod	Incl. w/ 12 Hr Employee Trips			
23	Unpaved Tankering Trips (HHTD)	73.3	miles/day	26,761.80	miles/year	CalEEMod	Incl. w/ Misc Trips			
24	Unpaved Misc. Trips (HHDT)	3.3	miles/day	354.85	miles/year	CalEEMod	115.52	11.53	17.607	1.757
24	Unpaved Misc. Truck Trips (HHTD)	4.7	miles/day	532.98	miles/year	CalEEMod	Incl. w/ Misc Trips			
24	Unpaved 12 Hr. Employees (LD Mix)	42.1	miles/day	15,373.80	miles/year	CalEEMod	250.37	24.99	41.061	4.098
24	Unpaved 9/80 Employees (LD Mix)	128.0	miles/day	46,712.70	miles/year	CalEEMod	Incl. w/ 12 Hr Employee Trips			

24	Unpaved Tankering Trips (HHTD)	70.5	miles/day	25,732.50	miles/year	CalEEMod	Incl. w/ Misc Trips			
25	Unpaved Misc. Trips (HHDT)	2.8	miles/day	346.86	miles/year	CalEEMod	111.37	11.11	17.029	1.699
25	Unpaved Misc. Truck Trips (HHTD)	4.7	miles/day	532.98	miles/year	CalEEMod	Incl. w/ Misc Trips			
25	Unpaved 12 Hr. Employees (LD Mix)	42.1	miles/day	15,373.80	miles/year	CalEEMod	250.37	24.99	41.061	4.098
25	Unpaved 9/80 Employees (LD Mix)	128.0	miles/day	46,712.70	miles/year	CalEEMod	Incl. w/ 12 Hr Employee Trips			
25	Unpaved Tankering Trips (HHTD)	68.2	miles/day	24,874.75	miles/year	CalEEMod	Incl. w/ Misc Trips			
26	Unpaved Misc. Trips (HHDT)	2.8	miles/day	333.23	miles/year	CalEEMod	108.60	10.84	16.563	1.653
26	Unpaved Misc. Truck Trips (HHTD)	4.7	miles/day	532.98	miles/year	CalEEMod	Incl. w/ Misc Trips			
26	Unpaved 12 Hr. Employees (LD Mix)	42.1	miles/day	15,373.80	miles/year	CalEEMod	250.37	24.99	41.061	4.098
26	Unpaved 9/80 Employees (LD Mix)	128.0	miles/day	46,712.70	miles/year	CalEEMod	Incl. w/ 12 Hr Employee Trips			
26	Unpaved Tankering Trips (HHTD)	66.3	miles/day	24,188.55	miles/year	CalEEMod	Incl. w/ Misc Trips			
27	Unpaved Misc. Trips (HHDT)	2.8	miles/day	325.71	miles/year	CalEEMod	105.14	10.49	15.996	1.596
27	Unpaved Misc. Truck Trips (HHTD)	4.7	miles/day	532.98	miles/year	CalEEMod	Incl. w/ Misc Trips			
27	Unpaved 12 Hr. Employees (LD Mix)	42.1	miles/day	15,373.80	miles/year	CalEEMod	250.37	24.99	41.061	4.098
27	Unpaved 9/80 Employees (LD Mix)	128.0	miles/day	46,712.70	miles/year	CalEEMod	Incl. w/ 12 Hr Employee Trips			
27	Unpaved Tankering Trips (HHTD)	63.9	miles/day	23,330.80	miles/year	CalEEMod	Incl. w/ Misc Trips			
28	Unpaved Misc. Trips (HHDT)	2.8	miles/day	318.19	miles/year	CalEEMod	100.99	10.08	15.315	1.528
28	Unpaved Misc. Truck Trips (HHTD)	4.7	miles/day	532.98	miles/year	CalEEMod	Incl. w/ Misc Trips			
28	Unpaved 12 Hr. Employees (LD Mix)	42.1	miles/day	15,373.80	miles/year	CalEEMod	250.37	24.99	41.061	4.098
28	Unpaved 9/80 Employees (LD Mix)	128.0	miles/day	46,712.70	miles/year	CalEEMod	Incl. w/ 12 Hr Employee Trips			
28	Unpaved Tankering Trips (HHTD)	61.1	miles/day	22,301.50	miles/year	CalEEMod	Incl. w/ Misc Trips			
29	Unpaved Misc. Trips (HHDT)	2.8	miles/day	310.20	miles/year	CalEEMod	97.54	9.73	14.743	1.471
29	Unpaved Misc. Truck Trips (HHTD)	4.7	miles/day	532.98	miles/year	CalEEMod	Incl. w/ Misc Trips			
29	Unpaved 12 Hr. Employees (LD Mix)	42.1	miles/day	15,373.80	miles/year	CalEEMod	250.37	24.99	41.061	4.098
29	Unpaved 9/80 Employees (LD Mix)	128.0	miles/day	46,712.70	miles/year	CalEEMod	Incl. w/ 12 Hr Employee Trips			
29	Unpaved Tankering Trips (HHTD)	58.8	miles/day	21,443.75	miles/year	CalEEMod	Incl. w/ Misc Trips			
30	Unpaved Misc. Trips (HHDT)	2.4	miles/day	257.09	miles/year	CalEEMod	84.39	8.42	12.661	1.263
30	Unpaved Misc. Truck Trips (HHTD)	4.7	miles/day	532.98	miles/year	CalEEMod	Incl. w/ Misc Trips			
30	Unpaved 12 Hr. Employees (LD Mix)	42.1	miles/day	15,373.80	miles/year	CalEEMod	250.37	24.99	41.061	4.098
30	Unpaved 9/80 Employees (LD Mix)	128.0	miles/day	46,712.70	miles/year	CalEEMod	Incl. w/ 12 Hr Employee Trips			
30	Unpaved Tankering Trips (HHTD)	50.3	miles/day	18,355.85	miles/year	CalEEMod	Incl. w/ Misc Trips			
31	Unpaved Misc. Trips (HHDT)	1.9	miles/day	243.46	miles/year	CalEEMod	80.24	8.01	12.082	1.206
31	Unpaved Misc. Truck Trips (HHTD)	4.7	miles/day	532.98	miles/year	CalEEMod	Incl. w/ Misc Trips			
31	Unpaved 12 Hr. Employees (LD Mix)	42.1	miles/day	15,373.80	miles/year	CalEEMod	250.37	24.99	41.061	4.098
31	Unpaved 9/80 Employees (LD Mix)	128.0	miles/day	46,712.70	miles/year	CalEEMod	Incl. w/ 12 Hr Employee Trips			
31	Unpaved Tankering Trips (HHTD)	47.9	miles/day	17,498.10	miles/year	CalEEMod	Incl. w/ Misc Trips			

1. Unpaved road traveled emissions were calculated using CelEEMod which used the following methodology.

$EF = \{[[k \times (s/12)^1 \times (S/30)^{0.5}]/[(M/0.5)^{0.2}]]-C\} \times [1 - (P/365)]$

Where,

EF = emission factor

k = particle size multiplier

s = surface material silt content (%)

M = surface material moisture content (%)

S = mean vehicle speed (mph)

C = emissions factor for 1980's vehicle fleet exhaust, brake wear and tire wear

P = number of days in a year with at least 0.254 mm of precipitation

Then,

E = EF x VMT

Where,

E = emissions

EF = emission factor

VMT = unpaved vehicle miles traveld

Operational Fugitive Dust Emission Calculations
Mitigated

		Max		Average			lbs/Day		Tons/Year	
Year	Activity/Source	Source	Source Units	Source	Source Units	Emissions Factor	PM10	PM2.5	PM10	PM2.5
-1	Unpaved Misc. Trips (HHDT)	1.4	miles/day	188.94	miles/year	CalEEMod	2.18	0.22	0.310	0.031
-1	Unpaved Misc. Truck Trips (HHTD)	4.7	miles/day	532.98	miles/year	CalEEMod	Incl. w/ Misc Trips			
-1	Unpaved 12 Hr. Employees (LD Mix)	42.1	miles/day	15,373.80	miles/year	CalEEMod	11.96	1.19	1.962	0.196
-1	Unpaved 9/80 Employees (LD Mix)	128.0	miles/day	46,712.70	miles/year	CalEEMod	Incl. w/ 12 Hr Employee Trips			
-1	Unpaved Tankering Trips (HHTD)	24.9	miles/day	9,092.15	miles/year	CalEEMod	Incl. w/ Misc Trips			
1	Unpaved Misc. Trips (HHDT)	2.4	miles/day	255.21	miles/year	CalEEMod	2.98	0.30	0.427	0.043
1	Unpaved Misc. Truck Trips (HHTD)	4.7	miles/day	532.98	miles/year	CalEEMod	Incl. w/ Misc Trips			
1	Unpaved 12 Hr. Employees (LD Mix)	42.1	miles/day	15,373.80	miles/year	CalEEMod	11.96	1.19	1.962	0.196
1	Unpaved 9/80 Employees (LD Mix)	128.0	miles/day	46,712.70	miles/year	CalEEMod	Incl. w/ 12 Hr Employee Trips			
1	Unpaved Tankering Trips (HHTD)	34.8	miles/day	12,694.70	miles/year	CalEEMod	Incl. w/ Misc Trips			
2	Unpaved Misc. Trips (HHDT)	2.4	miles/day	269.31	miles/year	CalEEMod	3.34	0.33	0.492	0.049
2	Unpaved Misc. Truck Trips (HHTD)	4.7	miles/day	532.98	miles/year	CalEEMod	Incl. w/ Misc Trips			
2	Unpaved 12 Hr. Employees (LD Mix)	42.1	miles/day	15,373.80	miles/year	CalEEMod	11.96	1.19	1.962	0.196
2	Unpaved 9/80 Employees (LD Mix)	128.0	miles/day	46,712.70	miles/year	CalEEMod	Incl. w/ 12 Hr Employee Trips			
2	Unpaved Tankering Trips (HHTD)	40.4	miles/day	14,753.30	miles/year	CalEEMod	Incl. w/ Misc Trips			
3	Unpaved Misc. Trips (HHDT)	2.4	miles/day	269.78	miles/year	CalEEMod	3.37	0.34	0.498	0.050
3	Unpaved Misc. Truck Trips (HHTD)	4.7	miles/day	532.98	miles/year	CalEEMod	Incl. w/ Misc Trips			
3	Unpaved 12 Hr. Employees (LD Mix)	42.1	miles/day	15,373.80	miles/year	CalEEMod	11.96	1.19	1.962	0.196
3	Unpaved 9/80 Employees (LD Mix)	128.0	miles/day	46,712.70	miles/year	CalEEMod	Incl. w/ 12 Hr Employee Trips			
3	Unpaved Tankering Trips (HHTD)	40.9	miles/day	14,924.85	miles/year	CalEEMod	Incl. w/ Misc Trips			
4	Unpaved Misc. Trips (HHDT)	2.4	miles/day	271.66	miles/year	CalEEMod	3.51	0.35	0.519	0.052
4	Unpaved Misc. Truck Trips (HHTD)	4.7	miles/day	532.98	miles/year	CalEEMod	Incl. w/ Misc Trips			
4	Unpaved 12 Hr. Employees (LD Mix)	42.1	miles/day	15,373.80	miles/year	CalEEMod	11.96	1.19	1.962	0.196
4	Unpaved 9/80 Employees (LD Mix)	128.0	miles/day	46,712.70	miles/year	CalEEMod	Incl. w/ 12 Hr Employee Trips			
4	Unpaved Tankering Trips (HHTD)	42.8	miles/day	15,611.05	miles/year	CalEEMod	Incl. w/ Misc Trips			
5	Unpaved Misc. Trips (HHDT)	2.8	miles/day	333.23	miles/year	CalEEMod	5.23	0.52	0.798	0.080
5	Unpaved Misc. Truck Trips (HHTD)	4.7	miles/day	532.98	miles/year	CalEEMod	Incl. w/ Misc Trips			
5	Unpaved 12 Hr. Employees (LD Mix)	42.1	miles/day	15,373.80	miles/year	CalEEMod	11.96	1.19	1.962	0.196
5	Unpaved 9/80 Employees (LD Mix)	128.0	miles/day	46,712.70	miles/year	CalEEMod	Incl. w/ 12 Hr Employee Trips			
5	Unpaved Tankering Trips (HHTD)	66.7	miles/day	24,360.10	miles/year	CalEEMod	Incl. w/ Misc Trips			
6	Unpaved Misc. Trips (HHDT)	3.3	miles/day	365.66	miles/year	CalEEMod	6.02	0.60	0.924	0.092
6	Unpaved Misc. Truck Trips (HHTD)	4.7	miles/day	532.98	miles/year	CalEEMod	Incl. w/ Misc Trips			
6	Unpaved 12 Hr. Employees (LD Mix)	42.1	miles/day	15,373.80	miles/year	CalEEMod	11.96	1.19	1.962	0.196
6	Unpaved 9/80 Employees (LD Mix)	128.0	miles/day	46,712.70	miles/year	CalEEMod	Incl. w/ 12 Hr Employee Trips			
6	Unpaved Tankering Trips (HHTD)	77.6	miles/day	28,305.75	miles/year	CalEEMod	Incl. w/ Misc Trips			
7	Unpaved Misc. Trips (HHDT)	3.3	miles/day	377.41	miles/year	CalEEMod	6.48	0.65	1.000	0.100
7	Unpaved Misc. Truck Trips (HHTD)	4.7	miles/day	532.98	miles/year	CalEEMod	Incl. w/ Misc Trips			
7	Unpaved 12 Hr. Employees (LD Mix)	42.1	miles/day	15,373.80	miles/year	CalEEMod	11.96	1.19	1.962	0.196
7	Unpaved 9/80 Employees (LD Mix)	128.0	miles/day	46,712.70	miles/year	CalEEMod	Incl. w/ 12 Hr Employee Trips			
7	Unpaved Tankering Trips (HHTD)	84.1	miles/day	30,707.45	miles/year	CalEEMod	Incl. w/ Misc Trips			
8	Unpaved Misc. Trips (HHDT)	3.3	miles/day	390.57	miles/year	CalEEMod	6.65	0.66	1.028	0.103
8	Unpaved Misc. Truck Trips (HHTD)	4.7	miles/day	532.98	miles/year	CalEEMod	Incl. w/ Misc Trips			
8	Unpaved 12 Hr. Employees (LD Mix)	42.1	miles/day	15,373.80	miles/year	CalEEMod	11.96	1.19	1.962	0.196
8	Unpaved 9/80 Employees (LD Mix)	128.0	miles/day	46,712.70	miles/year	CalEEMod	Incl. w/ 12 Hr Employee Trips			
8	Unpaved Tankering Trips (HHTD)	86.5	miles/day	31,565.20	miles/year	CalEEMod	Incl. w/ Misc Trips			
9	Unpaved Misc. Trips (HHDT)	3.3	miles/day	400.91	miles/year	CalEEMod	7.05	0.70	1.093	0.109
9	Unpaved Misc. Truck Trips (HHTD)	4.7	miles/day	532.98	miles/year	CalEEMod	Incl. w/ Misc Trips			
9	Unpaved 12 Hr. Employees (LD Mix)	42.1	miles/day	15,373.80	miles/year	CalEEMod	11.96	1.19	1.962	0.196
9	Unpaved 9/80 Employees (LD Mix)	128.0	miles/day	46,712.70	miles/year	CalEEMod	Incl. w/ 12 Hr Employee Trips			
9	Unpaved Tankering Trips (HHTD)	92.1	miles/day	33,623.80	miles/year	CalEEMod	Incl. w/ Misc Trips			
10	Unpaved Misc. Trips (HHDT)	3.8	miles/day	401.85	miles/year	CalEEMod	7.18	0.72	1.109	0.111
10	Unpaved Misc. Truck Trips (HHTD)	4.7	miles/day	532.98	miles/year	CalEEMod	Incl. w/ Misc Trips			
10	Unpaved 12 Hr. Employees (LD Mix)	42.1	miles/day	15,373.80	miles/year	CalEEMod	11.96	1.19	1.962	0.196
10	Unpaved 9/80 Employees (LD Mix)	128.0	miles/day	46,712.70	miles/year	CalEEMod	Incl. w/ 12 Hr Employee Trips			
10	Unpaved Tankering Trips (HHTD)	93.5	miles/day	34,138.45	miles/year	CalEEMod	Incl. w/ Misc Trips			
11	Unpaved Misc. Trips (HHDT)	3.3	miles/day	400.91	miles/year	CalEEMod	7.08	0.71	1.098	0.110
11	Unpaved Misc. Truck Trips (HHTD)	4.7	miles/day	532.98	miles/year	CalEEMod	Incl. w/ Misc Trips			
11	Unpaved 12 Hr. Employees (LD Mix)	42.1	miles/day	15,373.80	miles/year	CalEEMod	11.96	1.19	1.962	0.196
11	Unpaved 9/80 Employees (LD Mix)	128.0	miles/day	46,712.70	miles/year	CalEEMod	Incl. w/ 12 Hr Employee Trips			
11	Unpaved Tankering Trips (HHTD)	92.6	miles/day	33,795.35	miles/year	CalEEMod	Incl. w/ Misc Trips			
12	Unpaved Misc. Trips (HHDT)	3.3	miles/day	390.57	miles/year	CalEEMod	6.72	0.67	1.039	0.104
12	Unpaved Misc. Truck Trips (HHTD)	4.7	miles/day	532.98	miles/year	CalEEMod	Incl. w/ Misc Trips			
12	Unpaved 12 Hr. Employees (LD Mix)	42.1	miles/day	15,373.80	miles/year	CalEEMod	11.96	1.19	1.962	0.196
12	Unpaved 9/80 Employees (LD Mix)	128.0	miles/day	46,712.70	miles/year	CalEEMod	Incl. w/ 12 Hr Employee Trips			
12	Unpaved Tankering Trips (HHTD)	87.4	miles/day	31,908.30	miles/year	CalEEMod	Incl. w/ Misc Trips			
13	Unpaved Misc. Trips (HHDT)	3.3	miles/day	388.22	miles/year	CalEEMod	6.55	0.66	1.012	0.101
13	Unpaved Misc. Truck Trips (HHTD)	4.7	miles/day	532.98	miles/year	CalEEMod	Incl. w/ Misc Trips			
13	Unpaved 12 Hr. Employees (LD Mix)	42.1	miles/day	15,373.80	miles/year	CalEEMod	11.96	1.19	1.962	0.196
13	Unpaved 9/80 Employees (LD Mix)	128.0	miles/day	46,712.70	miles/year	CalEEMod	Incl. w/ 12 Hr Employee Trips			
13	Unpaved Tankering Trips (HHTD)	85.1	miles/day	31,050.55	miles/year	CalEEMod	Incl. w/ Misc Trips			
14	Unpaved Misc. Trips (HHDT)	3.3	miles/day	394.33	miles/year	CalEEMod	6.58	0.66	1.017	0.102
14	Unpaved Misc. Truck Trips (HHTD)	4.7	miles/day	532.98	miles/year	CalEEMod	Incl. w/ Misc Trips			
14	Unpaved 12 Hr. Employees (LD Mix)	42.1	miles/day	15,373.80	miles/year	CalEEMod	11.96	1.19	1.962	0.196
14	Unpaved 9/80 Employees (LD Mix)	128.0	miles/day	46,712.70	miles/year	CalEEMod	Incl. w/ 12 Hr Employee Trips			
14	Unpaved Tankering Trips (HHTD)	85.5	miles/day	31,222.10	miles/year	CalEEMod	Incl. w/ Misc Trips			
15	Unpaved Misc. Trips (HHDT)	3.3	miles/day	394.33	miles/year	CalEEMod	6.55	0.66	1.011	0.101
15	Unpaved Misc. Truck Trips (HHTD)	4.7	miles/day	532.98	miles/year	CalEEMod	Incl. w/ Misc Trips			
15	Unpaved 12 Hr. Employees (LD Mix)	42.1	miles/day	15,373.80	miles/year	CalEEMod	11.96	1.19	1.962	0.196
15	Unpaved 9/80 Employees (LD Mix)	128.0	miles/day	46,712.70	miles/year	CalEEMod	Incl. w/ 12 Hr Employee Trips			
15	Unpaved Tankering Trips (HHTD)	85.1	miles/day	31,050.55	miles/year	CalEEMod	Incl. w/ Misc Trips			
16	Unpaved Misc. Trips (HHDT)	3.3	miles/day	400.44	miles/year	CalEEMod	6.58	0.66	1.017	0.102
16	Unpaved Misc. Truck Trips (HHTD)	4.7	miles/day	532.98	miles/year	CalEEMod	Incl. w/ Misc Trips			
16	Unpaved 12 Hr. Employees (LD Mix)	42.1	miles/day	15,373.80	miles/year	CalEEMod	11.96	1.19	1.962	0.196
16	Unpaved 9/80 Employees (LD Mix)	128.0	miles/day	46,712.70	miles/year	CalEEMod	Incl. w/ 12 Hr Employee Trips			
16	Unpaved Tankering Trips (HHTD)	85.5	miles/day	31,222.10	miles/year	CalEEMod	Incl. w/ Misc Trips			
17	Unpaved Misc. Trips (HHDT)	3.3	miles/day	396.68	miles/year	CalEEMod	6.74	0.67	1.043	0.104
17	Unpaved Misc. Truck Trips (HHTD)	4.7	miles/day	532.98	miles/year	CalEEMod	Incl. w/ Misc Trips			
17	Unpaved 12 Hr. Employees (LD Mix)	42.1	miles/day	15,373.80	miles/year	CalEEMod	11.96	1.19	1.962	0.196
17	Unpaved 9/80 Employees (LD Mix)	128.0	miles/day	46,712.70	miles/year	CalEEMod	Incl. w/ 12 Hr Employee Trips			
17	Unpaved Tankering Trips (HHTD)	87.9	miles/day	32,079.85	miles/year	CalEEMod	Incl. w/ Misc Trips			
18	Unpaved Misc. Trips (HHDT)	3.8	miles/day	407.02	miles/year	CalEEMod	6.67	0.66	1.027	0.102
18	Unpaved Misc. Truck Trips (HHTD)	4.7	miles/day	532.98	miles/year	CalEEMod	Incl. w/ Misc Trips			
18	Unpaved 12 Hr. Employees (LD Mix)	42.1	miles/day	15,373.80	miles/year	CalEEMod	11.96	1.19	1.962	0.196
18	Unpaved 9/80 Employees (LD Mix)	128.0	miles/day	46,712.70	miles/year	CalEEMod	Incl. w/ 12 Hr Employee Trips			
18	Unpaved Tankering Trips (HHTD)	86.5	miles/day	31,565.20	miles/year	CalEEMod	Incl. w/ Misc Trips			
19	Unpaved Misc. Trips (HHDT)	3.8	miles/day	403.26	miles/year	CalEEMod	6.41	0.64	0.983	0.098
19	Unpaved Misc. Truck Trips (HHTD)	4.7	miles/day	532.98	miles/year	CalEEMod	Incl. w/ Misc Trips			
19	Unpaved 12 Hr. Employees (LD Mix)	42.1	miles/day	15,373.80	miles/year	CalEEMod	11.96	1.19	1.962	0.196
19	Unpaved 9/80 Employees (LD Mix)	128.0	miles/day	46,712.70	miles/year	CalEEMod	Incl. w/ 12 Hr Employee Trips			
19	Unpaved Tankering Trips (HHTD)	82.7	miles/day	30,192.80	miles/year	CalEEMod	Incl. w/ Misc Trips			
20	Unpaved Misc. Trips (HHDT)	3.8	miles/day	403.26	miles/year	CalEEMod	6.24	0.62	0.956	0.095
20	Unpaved Misc. Truck Trips (HHTD)	4.7	miles/day	532.98	miles/year	CalEEMod	Incl. w/ Misc Trips			
20	Unpaved 12 Hr. Employees (LD Mix)	42.1	miles/day	15,373.80	miles/year	CalEEMod	11.96	1.19	1.962	0.196
20	Unpaved 9/80 Employees (LD Mix)	128.0	miles/day	46,712.70	miles/year	CalEEMod	Incl. w/ 12 Hr Employee Trips			
20	Unpaved Tankering Trips (HHTD)	80.4	miles/day	29,335.05	miles/year	CalEEMod	Incl. w/ Misc Trips			
21	Unpaved Misc. Trips (HHDT)	3.3	miles/day	389.63	miles/year	CalEEMod	6.01	0.60	0.923	0.092
21	Unpaved Misc. Truck Trips (HHTD)	4.7	miles/day	532.98	miles/year	CalEEMod	Incl. w/ Misc Trips			
21	Unpaved 12 Hr. Employees (LD Mix)	42.1	miles/day	15,373.80	miles/year	CalEEMod	11.96	1.19	1.962	0.196
21	Unpaved 9/80 Employees (LD Mix)	128.0	miles/day	46,712.70	miles/year	CalEEMod	Incl. w/ 12 Hr Employee Trips			
21	Unpaved Tankering Trips (HHTD)	77.6	miles/day	28,305.75	miles/year	CalEEMod	Incl. w/ Misc Trips			
22	Unpaved Misc. Trips (HHDT)	3.3	miles/day	381.64	miles/year	CalEEMod	5.88	0.59	0.901	0.090
22	Unpaved Misc. Truck Trips (HHTD)	4.7	miles/day	532.98	miles/year	CalEEMod	Incl. w/ Misc Trips			
22	Unpaved 12 Hr. Employees (LD Mix)	42.1	miles/day	15,373.80	miles/year	CalEEMod	11.96	1.19	1.962	0.196
22	Unpaved 9/80 Employees (LD Mix)	128.0	miles/day	46,712.70	miles/year	CalEEMod	Incl. w/ 12 Hr Employee Trips			
22	Unpaved Tankering Trips (HHTD)	75.7	miles/day	27,619.55	miles/year	CalEEMod	Incl. w/ Misc Trips			
23	Unpaved Misc. Trips (HHDT)	3.3	miles/day	362.84	miles/year	CalEEMod	5.72	0.57	0.873	0.087
23	Unpaved Misc. Truck Trips (HHTD)	4.7	miles/day	532.98	miles/year	CalEEMod	Incl. w/ Misc Trips			
23	Unpaved 12 Hr. Employees (LD Mix)	42.1	miles/day	15,373.80	miles/year	CalEEMod	11.96	1.19	1.962	0.196
23	Unpaved 9/80 Employees (LD Mix)	128.0	miles/day	46,712.70	miles/year	CalEEMod	Incl. w/ 12 Hr Employee Trips			
23	Unpaved Tankering Trips (HHTD)	73.3	miles/day	26,761.80	miles/year	CalEEMod	Incl. w/ Misc Trips			
24	Unpaved Misc. Trips (HHDT)	3.3	miles/day	354.85	miles/year	CalEEMod	5.52	0.55	0.841	0.084
24	Unpaved Misc. Truck Trips (HHTD)	4.7	miles/day	532.98	miles/year	CalEEMod	Incl. w/ Misc Trips			
24	Unpaved 12 Hr. Employees (LD Mix)	42.1	miles/day	15,373.80	miles/year	CalEEMod	11.96	1.19	1.962	0.196
24	Unpaved 9/80 Employees (LD Mix)	128.0	miles/day	46,712.70	miles/year	CalEEMod	Incl. w/ 12 Hr Employee Trips			

24	Unpaved Tankering Trips (HHTD)	70.5	miles/day	25,732.50	miles/year	CalEEMod	Incl. w/ Misc Trips			
25	Unpaved Misc. Trips (HHDT)	2.8	miles/day	346.86	miles/year	CalEEMod	5.32	0.53	0.813	0.081
25	Unpaved Misc. Truck Trips (HHTD)	4.7	miles/day	532.98	miles/year	CalEEMod	Incl. w/ Misc Trips			
25	Unpaved 12 Hr. Employees (LD Mix)	42.1	miles/day	15,373.80	miles/year	CalEEMod	11.96	1.19	1.962	0.196
25	Unpaved 9/80 Employees (LD Mix)	128.0	miles/day	46,712.70	miles/year	CalEEMod	Incl. w/ 12 Hr Employee Trips			
25	Unpaved Tankering Trips (HHTD)	68.2	miles/day	24,874.75	miles/year	CalEEMod	Incl. w/ Misc Trips			
26	Unpaved Misc. Trips (HHDT)	2.8	miles/day	333.23	miles/year	CalEEMod	5.19	0.52	0.791	0.079
26	Unpaved Misc. Truck Trips (HHTD)	4.7	miles/day	532.98	miles/year	CalEEMod	Incl. w/ Misc Trips			
26	Unpaved 12 Hr. Employees (LD Mix)	42.1	miles/day	15,373.80	miles/year	CalEEMod	11.96	1.19	1.962	0.196
26	Unpaved 9/80 Employees (LD Mix)	128.0	miles/day	46,712.70	miles/year	CalEEMod	Incl. w/ 12 Hr Employee Trips			
26	Unpaved Tankering Trips (HHTD)	66.3	miles/day	24,188.55	miles/year	CalEEMod	Incl. w/ Misc Trips			
27	Unpaved Misc. Trips (HHDT)	2.8	miles/day	325.71	miles/year	CalEEMod	5.02	0.50	0.764	0.076
27	Unpaved Misc. Truck Trips (HHTD)	4.7	miles/day	532.98	miles/year	CalEEMod	Incl. w/ Misc Trips			
27	Unpaved 12 Hr. Employees (LD Mix)	42.1	miles/day	15,373.80	miles/year	CalEEMod	11.96	1.19	1.962	0.196
27	Unpaved 9/80 Employees (LD Mix)	128.0	miles/day	46,712.70	miles/year	CalEEMod	Incl. w/ 12 Hr Employee Trips			
27	Unpaved Tankering Trips (HHTD)	63.9	miles/day	23,330.80	miles/year	CalEEMod	Incl. w/ Misc Trips			
28	Unpaved Misc. Trips (HHDT)	2.8	miles/day	318.19	miles/year	CalEEMod	4.82	0.48	0.731	0.073
28	Unpaved Misc. Truck Trips (HHTD)	4.7	miles/day	532.98	miles/year	CalEEMod	Incl. w/ Misc Trips			
28	Unpaved 12 Hr. Employees (LD Mix)	42.1	miles/day	15,373.80	miles/year	CalEEMod	11.96	1.19	1.962	0.196
28	Unpaved 9/80 Employees (LD Mix)	128.0	miles/day	46,712.70	miles/year	CalEEMod	Incl. w/ 12 Hr Employee Trips			
28	Unpaved Tankering Trips (HHTD)	61.1	miles/day	22,301.50	miles/year	CalEEMod	Incl. w/ Misc Trips			
29	Unpaved Misc. Trips (HHDT)	2.8	miles/day	310.20	miles/year	CalEEMod	4.66	0.46	0.704	0.070
29	Unpaved Misc. Truck Trips (HHTD)	4.7	miles/day	532.98	miles/year	CalEEMod	Incl. w/ Misc Trips			
29	Unpaved 12 Hr. Employees (LD Mix)	42.1	miles/day	15,373.80	miles/year	CalEEMod	11.96	1.19	1.962	0.196
29	Unpaved 9/80 Employees (LD Mix)	128.0	miles/day	46,712.70	miles/year	CalEEMod	Incl. w/ 12 Hr Employee Trips			
29	Unpaved Tankering Trips (HHTD)	58.8	miles/day	21,443.75	miles/year	CalEEMod	Incl. w/ Misc Trips			
30	Unpaved Misc. Trips (HHDT)	2.4	miles/day	257.09	miles/year	CalEEMod	4.03	0.40	0.605	0.060
30	Unpaved Misc. Truck Trips (HHTD)	4.7	miles/day	532.98	miles/year	CalEEMod	Incl. w/ Misc Trips			
30	Unpaved 12 Hr. Employees (LD Mix)	42.1	miles/day	15,373.80	miles/year	CalEEMod	11.96	1.19	1.962	0.196
30	Unpaved 9/80 Employees (LD Mix)	128.0	miles/day	46,712.70	miles/year	CalEEMod	Incl. w/ 12 Hr Employee Trips			
30	Unpaved Tankering Trips (HHTD)	50.3	miles/day	18,355.85	miles/year	CalEEMod	Incl. w/ Misc Trips			
31	Unpaved Misc. Trips (HHDT)	1.9	miles/day	243.46	miles/year	CalEEMod	3.83	0.38	0.577	0.057
31	Unpaved Misc. Truck Trips (HHTD)	4.7	miles/day	532.98	miles/year	CalEEMod	Incl. w/ Misc Trips			
31	Unpaved 12 Hr. Employees (LD Mix)	42.1	miles/day	15,373.80	miles/year	CalEEMod	11.96	1.19	1.962	0.196
31	Unpaved 9/80 Employees (LD Mix)	128.0	miles/day	46,712.70	miles/year	CalEEMod	Incl. w/ 12 Hr Employee Trips			
31	Unpaved Tankering Trips (HHTD)	47.9	miles/day	17,498.10	miles/year	CalEEMod	Incl. w/ Misc Trips			

1. Unpaved road traveled emissions were calculated using CelEEMod which used the following methodology.

$EF = \{[[k \times (s/12)^1 \times (S/30)^{0.5}]/[(M/0.5)^{0.2}]]-C\} \times [1 - (P/365)]$

Where,

EF = emission factor

k = particle size multiplier

s = surface material silt content (%)

M = surface material moisture content (%)

S = mean vehicle speed (mph)

C = emissions factor for 1980's vehicle fleet exhaust, brake wear and tire wear

P = number of days in a year with at least 0.254 mm of precipitation

Then,

E = EF x VMT

Where,

E = emissions

EF = emission factor

VMT = unpaved vehicle miles traveld

2. Mitigation selected in CalEEMod were using soil stabilizers (80% reduction for applying soil binders once a month per AP-42), and reduce vehicle speed to less than 15 mph.

3. CalEEMod does not give mitigation credit for water to unpaved road travel since the model thinks it is offsite travel, therefore, a 61% reduction (CalEEMod default factor) of the unpaved road travel fugitive dust emissions was taken manually to acount for the onsite unpaved roads being watered 3 times daily.

Stationary Source Operational Emissions

- Stationary Source Emissions Summary
- Emergency Generator Emissions
- Flare Emissions
- Equipment Component Leaks Fugitive Emissions
- Equipment Component Counts
- Truck Loading Rack Emissions
- Steam Generators Emissions
- Storage Tanks Emissions
- Indirect Electrical Generation Emissions

Stationary Source Emissions Summary

Equipment Description	VOC (lb/day)	CO (lb/day)	NO_X (lb/day)	PM_{10} (lb/day)	$PM_{2.5}$ (lb/day)	SO_X (lb/day)	VOC (ton/yr)	CO (ton/yr)	NO_X (ton/yr)	PM_{10} (ton/yr)	$PM_{2.5}$ (ton/yr)	SO_X (ton/yr)	CO2e (tonne/yr)
PHASE ONE													
85 MM Btu/hr Natural Gas Fired Steam Generator	3.26	37.56	12.34	6.12	6.12	5.81	0.60	6.85	2.25	1.12	1.12	1.06	39,517.41
85 MM Btu/hr Natural Gas Fired Steam Generator	3.26	37.56	12.34	6.12	6.12	5.81	0.60	6.85	2.25	1.12	1.12	1.06	39,517.41
85 MM Btu/hr Natural Gas Fired Steam Generator	3.26	37.56	12.34	6.12	6.12	5.81	0.60	6.85	2.25	1.12	1.12	1.06	39,517.41
62.5 MM Btu/hr Natural Gas Fired Steam Generator*	2.40	27.62	12.71	11.40	11.40	19.05	0.44	5.04	2.32	2.08	2.08	3.48	29,056.92
Emergency Flare (1.5 hr/day, 180 hr/yr, 40MMbtu/hr)*	6.00	18.60	4.08	1.20	1.20	0.82	0.36	1.12	0.24	0.07	0.07	0.05	382.12
1,057 Bhp Limited Use Electrical Generator (600 hr/yr)*	2.67	11.69	3.84	0.17	0.17	0.32	0.03	0.15	0.05	2E-03	2.1E-03	4.0E-03	210.60
HCO Truck Loading Rack (10,000 bbl/day)	5.95	0.00	0.00	0.00	0.00	0.00	1.09	0.00	0.00	0.00	0.00	0.00	20.77
6,500 Bbl Dilluent Storage Tank T-2040	3.56	0.00	0.00	0.00	0.00	0.00	0.65	0.00	0.00	0.00	0.00	0.00	12.38
10,000 Bbl Oil Storage Tank T-2170	1.84	0.00	0.00	0.00	0.00	0.00	0.34	0.00	0.00	0.00	0.00	0.00	6.48
1000 Bbl Sludge Tank T-7030	0.16	0.00	0.00	0.00	0.00	0.00	0.03	0.00	0.00	0.00	0.00	0.00	0.57
1000 Bbl Skim Tank T-7070	0.41	0.00	0.00	0.00	0.00	0.00	0.08	0.00	0.00	0.00	0.00	0.00	1.52
100 Bbl Drain Tank T-9560	0.01	0.00	0.00	0.00	0.00	0.00	0.00	0.00	0.00	0.00	0.00	0.00	0.00
Phase 1 Fugitives	19.45	0.00	0.00	0.00	0.00	0.00	3.55	0.00	0.00	0.00	0.00	0.00	140.97
Worst Case Sub Total =	52.23	170.59	57.65	31.13	31.13	37.62	8.37	26.86	9.36	5.51	5.51	6.71	148,384.56
PHASE TWO													
85 MM Btu/hr Natural Gas Fired Steam Generator	3.26	37.56	12.34	6.12	6.12	5.81	0.60	6.85	2.25	1.12	1.12	1.06	39,517.41
85 MM Btu/hr Natural Gas Fired Steam Generator	3.26	37.56	12.34	6.12	6.12	5.81	0.60	6.85	2.25	1.12	1.12	1.06	39,517.41
85 MM Btu/hr Natural Gas Fired Steam Generator	3.26	37.56	12.34	6.12	6.12	5.81	0.60	6.85	2.25	1.12	1.12	1.06	39,517.41
HCO Truck Loading Rack (+10,000 bbl/day)	5.95	0.00	0.00	0.00	0.00	0.00	1.09	0.00	0.00	0.00	0.00	0.00	20.77
6,500 Bbl Dilluent (LCO) Storage Tank T-2050	3.56	0.00	0.00	0.00	0.00	0.00	0.65	0.00	0.00	0.00	0.00	0.00	12.38
10,000 Bbl COS Stock Oil Storage Tank T-2180	1.84	0.00	0.00	0.00	0.00	0.00	0.34	0.00	0.00	0.00	0.00	0.00	6.48
1000 Bbl Sludge Tank T-7140	0.16	0.00	0.00	0.00	0.00	0.00	0.03	0.00	0.00	0.00	0.00	0.00	0.57
1000 Bbl Skim Oil Tank T-7180	0.41	0.00	0.00	0.00	0.00	0.00	0.08	0.00	0.00	0.00	0.00	0.00	1.52
100 Bbl Drain Tank T-9600	0.01	0.00	0.00	0.00	0.00	0.00	0.00	0.00	0.00	0.00	0.00	0.00	0.00
Phase 2 Fugitives (added components)	13.87	0.00	0.00	0.00	0.00	0.00	2.53	0.00	0.00	0.00	0.00	0.00	99.41
Worst Case Sub Total =	35.58	112.68	37.02	18.36	18.36	17.43	6.52	20.55	6.75	3.36	3.36	3.18	118,693.36
Worst Case Total =	87.81	283.27	94.67	49.49	49.49	55.05	14.89	47.41	16.11	8.87	8.87	9.89	267,077.92

Internal Combustion Engine Emission Calculations

COMPANY NAME:	Aera Energy LLC			
			Engine Specifications	
EQUIPMENT DESCRIPTION:	1126	hp I.C. Engine	8,557,600	Btu/hr
Fuel Type		Natural Gas	5,134.56	MM Btu/yr
Operating Hours	24	hr/day		
	600	hr/yr		

	NOx	SO2	PM10	CO	VOC
EMISSION FACTORS (grams/hp - hour)	0.069	*	0.003	0.209	0.048
lbm/hr	0.17	0.01	0.01	0.52	0.12
lbm/day	4.09	0.34	0.18	12.45	2.85
ton/year	0.05	0.00	0.00	0.16	0.04

* lb SO2/hr = (Bhp/hr)*(10 cu. ft./Bhp)*(0.88gr/100 cu. ft.)*(1lb/7000 gr)

PM10 = AP-42 Emission Factor
NOx - Manufactures Guarantee
VOC - Manufactures Guarantee
CO - Manufactures Guarantee

Fuel	Units	Totals	
Natual Gas	MM Btu	5,134.56	
CO2: Tier 1 C-1b	O2 EF (kg **CO2** / MMBTU nat gas)[A]	53.02	
CH4: C-8b	CO2 Emissions (metric tons)	272.23	= Metric tons CO2 / yr
N2O: C-8b	H4 EF (kg **CH4** / MMBTU nat gas)[B]	0.001000	
	CH4 Emissions (metric tons)	0.005	= Metric tons CH4 / yr
	N2O EF (kg **N2O** / MMBTU nat gas)[B]	0.000100	
	N2O Emissions (metric tons)	0.00051	= Metric tons N2O / yr
	CO2e =	272.50	= Metric tons/yr

Aera Energy LLC

Attachment

Permit Number:

Facility: East Cat Canyon

Flare Emission Calculations

			Reference
Flare Throughput	0.057	MMScf/day	Permit Application
Gas Btu Content	1,050	Btu/scf	Permit Application
Sulfur Content	80	ppmv as H2S	Permit Application

Emission Factors	**lb/MMBtu**	**Reference**
NOx	0.0680	AP-42, Table 13.5-1
ROC	0.1000	Mannufacturer Guarantee @ 98% destruction efficiency & a THC EF of 0.14 lb/MM Btu
SOx	0.0137	Mass Balance Calculation
CO	0.3100	AP-42
PM	0.0200	APCD
PM10	0.0200	APCD

Btu Throughput		**Reference**		
40.000	MMBtu/hour	Permit Application		
60.000	MMBtu/day	MM Btu/hr times	1.5	hr/day
7,200.0	MMBtu/year	MM Btu/hr times	180	hr/yr

Emissions

	NOx	SOx	PM	PM10	CO	ROC
lb/hour	2.72	0.55	0.80	0.80	12.40	4.00
lb/day	4.08	0.82	1.20	1.20	18.60	6.00
ton/year	0.24	0.05	0.07	0.07	1.12	0.36

GHG Emissions	**Metric TPY**
CO2	381.744
CH4	0.0072
N2O	0.00072
CO2e	382.1184

Hourly Heat Release	40.000	MMBtu/hr
Daily Heat Release.....	60.000	MMBtu/day
Annual Heat Release	7,200.000	MMBtu/yr

Santa Barbara County APCD Fugitive ROC Emissions Calculation - CLP Method

ADMINISTRATIVE INFORMATION	
Attachment:	
Company:	Aera Energy LLC
Facility:	ECC Brooks Development - Phase 1
Processed by:	Doug mcCormick
Date:	2/12/2016
Path & File Name:	#N/A

Facility Type: (Choose *one* facility type by marking the box to the right of the facility type with an "x")

Production Field	x	Gas Processing Plant		Refinery		Offshore Platform	

Component:	Count	THC[1] Emission Factor (lb/day-clp)	ROC/THC Ratio	Uncontrolled ROC Emission (lb/day)	Control[2,3] Efficiency	Controlled ROC Emission (lb/hr)	Controlled ROC Emission (lb/day)	Controlled ROC Emission (Tons/Qtr)	Controlled ROC Emission (Tons/Yr)
Gas Condensate Service									
Valves - Accessible/Inaccessible		0.295	0.31	0.00	0.80	0.00	0.00	0.00	0.00
Valves - Unsafe		0.295	0.31	0.00	0.00	0.00	0.00	0.00	0.00
Valves - Bellows		0.295	0.31	0.00	0.90	0.00	0.00	0.00	0.00
Valves - Bellows / Background ppmv		0.295	0.31	0.00	1.00	0.00	0.00	0.00	0.00
Valves - Category A		0.295	0.31	0.00	0.84	0.00	0.00	0.00	0.00
Valves - Category B		0.295	0.31	0.00	0.85	0.00	0.00	0.00	0.00
Valves - Category C		0.295	0.31	0.00	0.87	0.00	0.00	0.00	0.00
Valves - Category D		0.295	0.31	0.00	0.87	0.00	0.00	0.00	0.00
Valves - Category E		0.295	0.31	0.00	0.88	0.00	0.00	0.00	0.00
Valves - Category F		0.295	0.31	0.00	0.90	0.00	0.00	0.00	0.00
Valves - Category G	716	0.295	0.31	65.48	0.92	0.22	5.24	0.24	0.96
Flanges/Connections - Accessible/Inaccessible		0.070	0.31	0.00	0.80	0.00	0.00	0.00	0.00
Flanges/Connections - Unsafe		0.070	0.31	0.00	0.00	0.00	0.00	0.00	0.00
Flanges/Connections - Category A		0.070	0.31	0.00	0.84	0.00	0.00	0.00	0.00
Flanges/Connections - Category B		0.070	0.31	0.00	0.85	0.00	0.00	0.00	0.00
Flanges/Connections - Category C		0.070	0.31	0.00	0.87	0.00	0.00	0.00	0.00
Flanges/Connections - Category D		0.070	0.31	0.00	0.87	0.00	0.00	0.00	0.00
Flanges/Connections - Category E		0.070	0.31	0.00	0.88	0.00	0.00	0.00	0.00
Flanges/Connections - Category F		0.070	0.31	0.00	0.90	0.00	0.00	0.00	0.00
Flanges/Connections - Category G	2,171	0.070	0.31	47.11	0.92	0.16	3.77	0.17	0.69
Compressor Seals - To Atm	2	2.143	0.31	1.33	0.80	0.01	0.27	0.01	0.05
Compressor Seals - To VRS		2.143	0.31	0.00	1.00	0.00	0.00	0.00	0.00
PSV - To Atm/Flare	4	6.670	0.31	8.27	0.80	0.07	1.65	0.08	0.30
PSV - To VRS	33	6.670	0.31	68.23	1.00	0.00	0.00	0.00	0.00
Pump Seals - Single		1.123	0.31	0.00	0.80	0.00	0.00	0.00	0.00
Pump Seals - Dual/Tandem		1.123	0.31	0.00	1.00	0.00	0.00	0.00	0.00
Sub Total	2,926			190.42		0.455	10.927	0.499	1.994

Santa Barbara County APCD Fugitive ROC Emissions Calculation - CLP Method

ADMINISTRATIVE INFORMATION	
Attachment:	
Company:	Aera Energy LLC
Facility:	ECC Brooks Development - Phase 1
Processed by:	Doug mcCormick
Date:	2/12/2016
Path & File Name:	#N/A

Facility Type: (Choose *one* facility type by marking the box to the right of the facility type with an "x")

Production Field	x	**Gas Processing Plant**		**Refinery**		**Offshore Platform**	

Component:	**Count**	**THC[1] Emission Factor (lb/day-clp)**	**ROC/THC Ratio**	**Uncontrolled ROC Emission (lb/day)**	**Control[2,3] Efficiency**	**Controlled ROC Emission (lb/hr)**	**Controlled ROC Emission (lb/day)**	**Controlled ROC Emission (Tons/Qtr)**	**Controlled ROC Emission (Tons/Yr)**
Oil Service									
Valves - Accessible/Inaccessible		0.0041	0.56	0.00	0.80	0.00	0.00	0.00	0.00
Valves - Unsafe		0.0041	0.56	0.00	0.00	0.00	0.00	0.00	0.00
Valves - Bellows		0.0041	0.56	0.00	0.90	0.00	0.00	0.00	0.00
Valves - Bellows / Background ppmv		0.0041	0.56	0.00	1.00	0.00	0.00	0.00	0.00
Valves - Category A		0.0041	0.56	0.00	0.84	0.00	0.00	0.00	0.00
Valves - Category B		0.0041	0.56	0.00	0.85	0.00	0.00	0.00	0.00
Valves - Category C		0.0041	0.56	0.00	0.87	0.00	0.00	0.00	0.00
Valves - Category D		0.0041	0.56	0.00	0.87	0.00	0.00	0.00	0.00
Valves - Category E		0.0041	0.56	0.00	0.88	0.00	0.00	0.00	0.00
Valves - Category F		0.0041	0.56	0.00	0.90	0.00	0.00	0.00	0.00
Valves - Category G	3,907	0.0041	0.56	8.97	0.92	0.03	0.72	0.03	0.13
Flanges/Connections - Accessible/Inaccessible		0.002	0.56	0.00	0.80	0.00	0.00	0.00	0.00
Flanges/Connections - Unsafe		0.002	0.56	0.00	0.00	0.00	0.00	0.00	0.00
Flanges/Connections - Category A		0.002	0.56	0.00	0.84	0.00	0.00	0.00	0.00
Flanges/Connections - Category B		0.002	0.56	0.00	0.85	0.00	0.00	0.00	0.00
Flanges/Connections - Category C		0.002	0.56	0.00	0.87	0.00	0.00	0.00	0.00
Flanges/Connections - Category D		0.002	0.56	0.00	0.87	0.00	0.00	0.00	0.00
Flanges/Connections - Category E		0.002	0.56	0.00	0.88	0.00	0.00	0.00	0.00
Flanges/Connections - Category F		0.002	0.56	0.00	0.90	0.00	0.00	0.00	0.00
Flanges/Connections - Category G	6,862	0.002	0.56	7.69	0.92	0.03	0.61	0.03	0.11
PSV - To Atm/Flare	1	0.267	0.56	0.15	0.80	0.00	0.03	0.00	0.01
PSV - To VRS	12	0.267	0.56	1.79	1.00	0.00	0.00	0.00	0.00
Pump Seals - Single		0.0039	0.56	0.00	0.80	0.00	0.00	0.00	0.00
Pump Seals - Dual/Tandem	52	0.0039	0.56	0.11	1.00	0.00	0.00	0.00	0.00
Sub Total	10,834			18.71		0.057	1.362	0.062	0.249
Total	**13,760**			**209.14**		**0.512**	**12.289**	**0.56**	**2.24**

Notes:
1 APCD P&P # 6100.061.1998.
2 A 80% efficiency is assigned to fugitive components Rule 331 implementation.
3 Emission Control efficiencies for the "category x" components are identified in "FHC Control Factors (ver 2.0)"

GHG Contribution	CH4 ton/yr	CO2e Tonnes/yr
Gas Service	4.44	84.56
Oil Service	0.20	3.72
Total	**4.63**	**88.28**

Santa Barbara County APCD Fugitive ROC Emissions Calculation - CLP Method

ADMINISTRATIVE INFORMATION	
Attachment:	
Company:	Aera Energy LLC
Facility:	ECC Brooks Development - Phase 2 Increase
Processed by:	Doug mcCormick
Date:	2/12/2016
Path & File Name:	#N/A

Facility Type: (Choose *one* facility type by marking the box to the right of the facility type with an "x")

Production Field	x	**Gas Processing Plant**		**Refinery**		**Offshore Platform**	

Component:	**Count**	**THC[1] Emission Factor (lb/day-c/p)**	**ROC/THC Ratio**	**Uncontrolled ROC Emission (lb/day)**	**Control[2,3] Efficiency**	**Controlled ROC Emission (lb/hr)**	**Controlled ROC Emission (lb/day)**	**Controlled ROC Emission (Tons/Qtr)**	**Controlled ROC Emission (Tons/Yr)**
Gas Condensate Service									
Valves - Accessible/Inaccessible		0.295	0.31	0.00	0.80	0.00	0.00	0.00	0.00
Valves - Unsafe		0.295	0.31	0.00	0.00	0.00	0.00	0.00	0.00
Valves - Bellows		0.295	0.31	0.00	0.90	0.00	0.00	0.00	0.00
Valves - Bellows / Background ppmv		0.295	0.31	0.00	1.00	0.00	0.00	0.00	0.00
Valves - Category A		0.295	0.31	0.00	0.84	0.00	0.00	0.00	0.00
Valves - Category B		0.295	0.31	0.00	0.85	0.00	0.00	0.00	0.00
Valves - Category C		0.295	0.31	0.00	0.87	0.00	0.00	0.00	0.00
Valves - Category D		0.295	0.31	0.00	0.87	0.00	0.00	0.00	0.00
Valves - Category E		0.295	0.31	0.00	0.88	0.00	0.00	0.00	0.00
Valves - Category F		0.295	0.31	0.00	0.90	0.00	0.00	0.00	0.00
Valves - Category G	437	0.295	0.31	39.96	0.92	0.13	3.20	0.15	0.58
Flanges/Connections - Accessible/Inaccessible		0.070	0.31	0.00	0.80	0.00	0.00	0.00	0.00
Flanges/Connections - Unsafe		0.070	0.31	0.00	0.00	0.00	0.00	0.00	0.00
Flanges/Connections - Category A		0.070	0.31	0.00	0.84	0.00	0.00	0.00	0.00
Flanges/Connections - Category B		0.070	0.31	0.00	0.85	0.00	0.00	0.00	0.00
Flanges/Connections - Category C		0.070	0.31	0.00	0.87	0.00	0.00	0.00	0.00
Flanges/Connections - Category D		0.070	0.31	0.00	0.87	0.00	0.00	0.00	0.00
Flanges/Connections - Category E		0.070	0.31	0.00	0.88	0.00	0.00	0.00	0.00
Flanges/Connections - Category F		0.070	0.31	0.00	0.90	0.00	0.00	0.00	0.00
Flanges/Connections - Category G	1,481	0.070	0.31	32.14	0.92	0.11	2.57	0.12	0.47
Compressor Seals - To Atm	2	2.143	0.31	1.33	0.80	0.01	0.27	0.01	0.05
Compressor Seals - To VRS		2.143	0.31	0.00	1.00	0.00	0.00	0.00	0.00
PSV - To Atm/Flare	4	6.670	0.31	8.27	0.80	0.07	1.65	0.08	0.30
PSV - To VRS	28	6.670	0.31	57.90	1.00	0.00	0.00	0.00	0.00
Pump Seals - Single		1.123	0.31	0.00	0.80	0.00	0.00	0.00	0.00
Pump Seals - Dual/Tandem	2	1.123	0.31	0.70	1.00	0.00	0.00	0.00	0.00
Sub Total	1,954			140.29		0.320	7.688	0.351	1.403

Santa Barbara County APCD Fugitive ROC Emissions Calculation - CLP Method

ADMINISTRATIVE INFORMATION	
Attachment:	
Company:	Aera Energy LLC
Facility:	ECC Brooks Development - Phase 2 Increase
Processed by:	Doug mcCormick
Date:	2/12/2016
Path & File Name:	#N/A

Facility Type: (Choose *one* facility type by marking the box to the right of the facility type with an "x")

Production Field	x	Gas Processing Plant		Refinery		Offshore Platform	

Component:	Count	THC[1] Emission Factor (lb/day-c/p)	ROC/THC Ratio	Uncontrolled ROC Emission (lb/day)	Control[2,3] Efficiency	Controlled ROC Emission (lb/hr)	Controlled ROC Emission (lb/day)	Controlled ROC Emission (Tons/Qtr)	Controlled ROC Emission (Tons/Yr)
Oil Service									
Valves - Accessible/Inaccessible		0.0041	0.56	0.00	0.80	0.00	0.00	0.00	0.00
Valves - Unsafe		0.0041	0.56	0.00	0.00	0.00	0.00	0.00	0.00
Valves - Bellows		0.0041	0.56	0.00	0.90	0.00	0.00	0.00	0.00
Valves - Bellows / Background ppmv		0.0041	0.56	0.00	1.00	0.00	0.00	0.00	0.00
Valves - Category A		0.0041	0.56	0.00	0.84	0.00	0.00	0.00	0.00
Valves - Category B		0.0041	0.56	0.00	0.85	0.00	0.00	0.00	0.00
Valves - Category C		0.0041	0.56	0.00	0.87	0.00	0.00	0.00	0.00
Valves - Category D		0.0041	0.56	0.00	0.87	0.00	0.00	0.00	0.00
Valves - Category E		0.0041	0.56	0.00	0.88	0.00	0.00	0.00	0.00
Valves - Category F		0.0041	0.56	0.00	0.90	0.00	0.00	0.00	0.00
Valves - Category G	3,435	0.0041	0.56	7.89	0.92	0.03	0.63	0.03	0.12
Flanges/Connections - Accessible/Inaccessible		0.002	0.56	0.00	0.80	0.00	0.00	0.00	0.00
Flanges/Connections - Unsafe		0.002	0.56	0.00	0.00	0.00	0.00	0.00	0.00
Flanges/Connections - Category A		0.002	0.56	0.00	0.84	0.00	0.00	0.00	0.00
Flanges/Connections - Category B		0.002	0.56	0.00	0.85	0.00	0.00	0.00	0.00
Flanges/Connections - Category C		0.002	0.56	0.00	0.87	0.00	0.00	0.00	0.00
Flanges/Connections - Category D		0.002	0.56	0.00	0.87	0.00	0.00	0.00	0.00
Flanges/Connections - Category E		0.002	0.56	0.00	0.88	0.00	0.00	0.00	0.00
Flanges/Connections - Category F		0.002	0.56	0.00	0.90	0.00	0.00	0.00	0.00
Flanges/Connections - Category G	5,855	0.002	0.56	6.56	0.92	0.02	0.52	0.02	0.10
PSV - To Atm/Flare	1	0.267	0.56	0.15	0.80	0.00	0.03	0.00	0.01
PSV - To VRS	10	0.267	0.56	1.50	1.00	0.00	0.00	0.00	0.00
Pump Seals - Single		0.0039	0.56	0.00	0.80	0.00	0.00	0.00	0.00
Pump Seals - Dual/Tandem	35	0.0039	0.56	0.08	1.00	0.00	0.00	0.00	0.00
Sub Total	9,336			16.17		0.049	1.185	0.054	0.216
Total	**11,290**			**156.46**		**0.370**	**8.873**	**0.40**	**1.62**

Notes:
1 APCD P&P # 6100.061.1998.
2 A 80% efficiency is assigned to fugitive components Rule 331 implementation.
3 Emission Control efficiencies for the "category x" components are identified in "FHC Control Factors (ver 2.0)"

GHG Contribution	CH4 ton/yr	CO2e Tonnes/yr
Gas Service	3.12	59.49
Oil Service	0.17	3.24
Total	**3.29**	**62.73**

Fugitive Emission Component Count Worksheet
East Cat Canyon Field Re-development Project
February 08, 2016

Current Average Contingency 0%
To change contingency modify values in row 4 of 'Comp_by_equip_type' tab

Calculations Validation:
25,050 Total Components - summary
25,050 Total Components - from look-ups

Sweet Gas Service			
Phase 1	**Phase 2**	**Project Total**	**Component Type**
518	317	835	VALVES
835	522	1,357	FLANGES
749	502	1,251	CONNECTIONS
2	2	4	COMPRESSORS SEALS
4	4	8	PSV TO ATM
26	18	44	PSV TO VRS
0	0	0	PUMP SEALS
2,134	1,365	3,499	Total Sweet Gas Components

Assumes flanges on 50% valves and 20% of total connections
Total connections minus flanged connections

Sweet Oil Service			
Phase 1	**Phase 2**	**Project Total**	**Component Type**
1,238	859	2,097	VALVES
1,866	1,312	3,178	FLANGES
1,274	951	2,225	CONNECTIONS
1	1	2	PSV TO ATM
12	10	32	PSV TO VRS
42	25	57	PUMP SEALS
4,433	3,158	7,591	Total Sweet Oil Components

Assumes flanges on 50% valves and 20% of total connections
Total connections minus flanged connections

Sour Gas Service			
Phase 1	**Phase 2**	**Project Total**	**Component Type**
198	120	318	VALVES
315	211	527	FLANGES
272	246	517	CONNECTIONS
0	0	0	COMPRESSORS SEALS
0	0	0	PSV TO ATM
7	10	17	PSV TO VRS
0	2	2	PUMP SEALS
792	589	1,381	Total Sour Gas Components

Assumes flanges on 50% valves and 20% of total connections
Total connections minus flanged connections

Sour Oil Service			
Phase 1	**Phase 2**	**Project Total**	**Component Type**
2,669	2,576	5,245	VALVES
3,413	3,294	6,708	FLANGES
309	298	606	CONNECTIONS
0	0	0	PSV TO ATM
0	0	0	PSV TO VRS
10	10	20	PUMP SEALS
6,401	6,178	12,579	Total Sour Oil Components

Assumes flanges on 50% valves and 20% of total connections
Total connections minus flanged connections

Component Count Worksheet Modifications:

Created list of equipment subject to fugitive emissions
liquid > 35 mg/l
excluded utility gas (methane >90%)

Matched equipment take-off with fugitive equipment list
Assigned production gathering, group station and selected PGTP equipment to sour service
Created equipment type take-offs for production gathering equipment
production well head tree
production ESD valve skid (Includes CVR ESD)
well measurement skid
CVR liquid traps
Eliminated "Compressor Seals" from Oil Service accounting
Created look-up list with component counts and type by equipment type
from TJ Cross typical equipment component worksheets
Created equipment take-off for typical emergency flare
Component counts for most surface equipment types carry a 1.5 multiplier for contingency in execution (50% contingency)
Component counts for typical production well tree carry NO contingency
Component counts for typical production ESD skid carries 10% contingency
Component counts for typical production well measurement and CVR traps carry 20% contingency

Re-assigned V-1070 and V-1270 to the OCP
Added note for FF-5020/5030, V-5010/5014 and V-5660/5670 to be located at Group Station (top of hill)
Updated locations of FF-5020/5030, V-5010/5014 and V-5660/5670 on equipment list worksheet; created location name PGTP-GS

2/8/16 - Additional contingency for all components set to zero - ambient Air emission plume > 160 ug/m3 went past project boundary

Phase 1	Phase 2	Project Total
13,760	11,290	25,050

x

			Drop down list -->	S/T Heat Exchanger	S/T Heat Exchanger	S/T Heat Exchanger	S/T Heat Exchanger	S/T Heat Exchanger	S/T Heat Exchanger	S/T Heat Exchanger	S/T Heat Exchanger	S/T Heat Exchanger	S/T Heat Exchanger			Vertical Separator	Vertical Separator	FWKO	Treater	Vertical Separator	Vertical Separator	FWKO	Treater	Vertical Separator	Vertical Separator	Vertical Separator
			OCP - CPF	HX 1050	HX 1090	HX 1100	HX 1110	HX 1120	HX 1250	HX 1290	HX 1300	HX 1310	HX 1320			V 1020	V 1030	V 1040	V 1060	V 1220	V 1230	V 1240	V 1260	V 1500	V 1070	V 1270
			equipment name	Emulsion S/T Pre-Heat Exchanger Train 1	Treated Oil Cooler Train 1	Produced Water Cooler Train 1	LCO S/T Heat Exchanger (Steam) Train 1	LCO S/T Heat Exchanger (heat medium) Train 1	Emulsion S/T Pre-Heat Exchanger Train 2	Treated Oil Cooler Train 2	Produced Water Cooler Train 2	LCO S/T Heat Exchanger (Steam) Train 2	LCO S/T Heat Exchanger (heat medium) Train 2			Production De-Sanding & De-Gassing Train 1	Production De-Sanding & De-Gassing Train 1	Free Water Knockout Horiz Vessel Train 1	Electrostatic Coalescer Horz Vessel Train 1	Production De-Sanding & De-Gassing Train 2	Production De-Sanding & De-Gassing Train 2	Free Water Knockout Horiz Vessel Train 2	Electrostatic Coalescer Horz Vessel Train 2	OCP TVR Main Inlet Scrubber	Produced Gas Scrubber Train 1	Produced Gas Scrubber Train 2
			take-off reference	DS-13186-78A	DS-13186-78A	DS-13186-78A	DS-13186-78A	DS-13186-78A	DS-13186-78A	DS-13186-78A	DS-13186-78A	DS-13186-78A	DS-13186-78A			DS-13186-95A	DS-13186-95A	DS-13186-75	DS-13186-77A	DS-13186-95A	DS-13186-95A	DS-13186-75	DS-13186-77A	DS-13186-95A	DS-13186-95A	DS-13186-95A
			phase	one	one	one	one	one	two	two	two	two	two			one	one	one	one	two	two	two	two	one	one	two
			Sweet Gas Service																							
130	112	242	VALVES	0	0	0	0	0	0	0	0	0	0			18	18	17	41	18	18	17	41	18	18	18
353	310	663	FLANGES/CONNECTIONS	0	0	0	0	0	0	0	0	0	0			43	43	49	132	43	43	49	132	43	43	43
0	0	0	COMPRESSORS SEALS	0	0	0	0	0	0	0	0	0	0			0	0	0	0	0	0	0	0	0	0	0
0	0	0	PSV TO ATM	0	0	0	0	0	0	0	0	0	0			0	0	0	0	0	0	0	0	0	0	0
6	5	11	PSV TO VRS	0	0	0	0	0	0	0	0	0	0			1	1	1	1	1	1	1	1	1	1	1
0	0	0	PUMP SEALS	0	0	0	0	0	0	0	0	0	0			0	0	0	0	0	0	0	0	0	0	0
			Sweet Oil Service																							
196	170	366	VALVES	6	6	6	6	6	6	6	6	6	6			26	26	42	20	26	26	42	20	26	26	26
524	452	976	FLANGES/CONNECTIONS	14	14	14	14	14	14	14	14	14	14			72	72	105	61	72	72	105	61	72	72	72
0	0	0	PSV TO ATM	0	0	0	0	0	0	0	0	0	0			0	0	0	0	0	0	0	0	0	0	0
0	0	0	PSV TO VRS	0	0	0	0	0	0	0	0	0	0			0	0	0	0	0	0	0	0	0	0	0
0	0	0	PUMP SEALS	0	0	0	0	0	0	0	0	0	0			0	0	0	0	0	0	0	0	0	0	0

			Drop down list -->	TVR Vapor Cooler	TVR Vapor Cooler	LX for Gas Service (Sher	X for Gas Service (Sher	Recovery Compressor	Recovery Compressor	Vertical Separator	Vertical Separator	Liquid Pumps	Liquid Pumps
			OCP - GS	FF 1510	FF 1520	HX 1080	HX 1280	K 1590	K 1600	V 1550	V 1560	P 1530	P 1540
			equipment name	OCP Tank Vapor Cooler	OCP Tank Vapor Cooler	Produced Gas Cooler Train 1	Produced Gas Cooler Train 2	OCP TVR Skid 1 Compressor	OCP TVR Skid 2 Compressor	OCP TVR Skid 1 Inlet Scrubber	OCP TVR Skid 2 Inlet Scrubber	OCP TVR Scrubber Condensate Pump1	OCP TVR Scrubber Condensate Pump2
			take-off reference	DS-13186-73D	DS-13186-73D	DS-13186-78XX	DS-13186-78XX	DS-13186-94	DS-13186-94	DS-13186-95A	DS-13186-95A	DS-13186-84A	DS-13186-84A
			phase	one	two	one	two	one	two	one	two	one	two
			Sweet Gas Service										
89	89	178	VALVES	32	32	6	6	51	51			0	0
294	294	588	FLANGES/CONNECTIONS	95	95	14	14	185	185			0	0
1	1	2	COMPRESSORS SEALS	0	0	0	0	1	1			0	0
0	0	0	PSV TO ATM	0	0	0	0	0	0			0	0
3	3	6	PSV TO VRS	1	1	0	0	2	2			0	0
0	0	0	PUMP SEALS	0	0	0	0	0	0			0	0
			Sweet Oil Service										
56	56	112	VALVES	0	0	0	0	47	47			9	9
171	171	342	FLANGES/CONNECTIONS	0	0	0	0	157	157			14	14
0	0	0	PSV TO ATM	0	0	0	0	0	0			0	0
0	0	0	PSV TO VRS	0	0	0	0	0	0			0	0
5	5	10	PUMP SEALS	0	0	0	0	4	4			1	1

			Drop down list -->	Stock Oil Cooling	Stock Oil Cooling	Stock Oil Cooling	Stock Oil Cooling	S/T Heat Exchanger	Loading Rack LACT Un	Loading Rack LACT Un	Loading Rack LACT Un	Loading Rack LACT Un	Liquid Pumps	Liquid Pumps	Liquid Pumps	Liquid Pumps			Liquid Pumps	Liquid Pumps	Liquid Pumps	Liquid Pumps	Atmospheric Tank	Atmospheric Tank
			COS	FF 2150	FF 2160	FF 2370	FF 2380	HX 2400	L 2250	L 2260	L 2270	L 2280	P 2210	P 2220	P 2230	P 2240			P 2340	P 2350	P 2410	P 2420	T 2170	T 2180
			equipment name	COS Stock Oil Cooler	COS Stock Oil Cooler	COS Stock Oil Cooler	COS Stock Oil Cooler	Steam Stock Oil Heating	1-Bay Truck Loading and Metering Rack	1-Bay Truck Loading and Metering Rack	1-Bay Truck Loading and Metering Rack	1-Bay Truck Loading and Metering Rack	Truck LACT Charge Pump	Truck LACT Charge Pump	Truck LACT Charge Pump	Truck LACT Charge Pump	Pipeline LACT Charge Pump	Pipeline LACT Charge Pump	COS Bottoms Water Transfer Pump	COS Bottoms Water Transfer Pump	COS Tank Heater Circulation Pump	COS Tank Heater Circulation Pump	COS Stock Oil Storage/ Reject Tank	COS Stock Oil Storage/ Reject Tank
			take-off reference	DS-13186-73C	DS-13186-73C	DS-13186-73C	DS-13186-73C	DS-13186-78A	DS-13186-81A	DS-13186-81A	DS-13186-81A	DS-13186-81A	DS-13186-84A	DS-13186-84A	DS-13186-84A	DS-13186-84A	#N/A	#N/A	DS-13186-84A	DS-13186-84A	DS-13186-84A	DS-13186-84A	DS-13186-86A	DS-13186-86A
			phase	one	one	two	two	one	one	one	two	two	one	one	one	two	two	two	one	one	one	one	one	two
			Sweet Gas Service																					
10	10	20	VALVES	0	0	0	0	0	3	3	3	3	0	0	0	0			0	0	0	0	4	4
37	37	74	FLANGES/CONNECTIONS	0	0	0	0	0	9	9	9	9	0	0	0	0			0	0	0	0	19	19
0	0	0	COMPRESSORS SEALS	0	0	0	0	0	0	0	0	0	0	0	0	0			0	0	0	0	0	0
1	1	2	PSV TO ATM	0	0	0	0	0	0	0	0	0	0	0	0	0			0	0	0	0	1	1
1	1	2	PSV TO VRS	0	0	0	0	0	0	0	0	0	0	0	0	0			0	0	0	0	1	1
0	0	0	PUMP SEALS	0	0	0	0	0	0	0	0	0	0	0	0	0			0	0	0	0	0	0
			Sweet Oil Service																					
228	168	396	VALVES	32	32	32	32	6	33	33	33	33	9	9	9	9			9	9	9	9	29	29
535	437	972	FLANGES/CONNECTIONS	95	95	95	95	14	87	87	87	87	14	14	14	14			14	14	14	14	59	59
0	0	0	PSV TO ATM	0	0	0	0	0	0	0	0	0	0	0	0	0			0	0	0	0	0	0
6	6	12	PSV TO VRS	1	1	1	1	0	2	2	2	2	0	0	0	0			0	0	0	0	0	0
7	1	8	PUMP SEALS	0	0	0	0	0	0	0	0	0	1	1	1	1			1	1	1	1	0	0

			Drop down list -->	Loading Rack LACT Un	Loading Rack LACT Un	Liquid Pumps	Liquid Pumps	Liquid Pumps	Liquid Pumps	Liquid Pumps			Liquid Pumps	Liquid Pumps	Atmospheric Tank	Atmospheric Tank
			LOS	L 2130	L 2140	P 2010	P 2020	P 2030	P 2070	P 2080			P 2360	P 2370	T 2040	T 2050
			equipment name	1-Bay Metering and Unloading Rack	1-Bay Metering and Unloading Rack	LCO Truck Unloading Pump	LCO Truck Unloading Pump	LCO Truck Unloading Pump	LCO Treating Blend Pump	LCO Treating Blend Pump	Pipeline Blend Pump	Pipeline Blend Pump	LCO Bottoms Water Pump	LCO Bottoms Water Pump	LCO Storage Tank	LCO Storage Tank
			take-off reference	DS-13186-81A	DS-13186-81A	DS-13186-84A	DS-13186-84A	DS-13186-84A	DS-13186-84A	DS-13186-84A	#N/A	#N/A	DS-13186-84A	DS-13186-84A	DS-13186-86A	DS-13186-86A
			phase	one	two	one	one	two	one	one	two	two	one	one	one	two
			Sweet Gas Service													
7	7	14	VALVES	3	3	0	0	0	0	0			0	0	4	4
28	28	56	FLANGES/CONNECTIONS	9	9	0	0	0	0	0			0	0	19	19
0	0	0	COMPRESSORS SEALS	0	0	0	0	0	0	0			0	0	0	0
1	1	2	PSV TO ATM	0	0	0	0	0	0	0			0	0	1	1
1	1	2	PSV TO VRS	0	0	0	0	0	0	0			0	0	1	1
0	0	0	PUMP SEALS	0	0	0	0	0	0	0			0	0	0	0
			Sweet Oil Service													
116	71	187	VALVES	33	33	9	9	9	9	9			9	9	29	29
230	160	390	FLANGES/CONNECTIONS	87	87	14	14	14	14	14			14	14	59	59
0	0	0	PSV TO ATM	0	0	0	0	0	0	0			0	0	0	0
2	2	4	PSV TO VRS	2	2	0	0	0	0	0			0	0	0	0
6	1	7	PUMP SEALS	0	0	1	1	1	1	1			1	1	0	0

			Drop down list -->	Vertical Separator	Vertical Separator
			GS	V 1010	V 1210
			equipment name	Group Station Prod Train 1 De-gassing Vessel	Group Station Prod Train 2 De-gassing Vessel
			take-off reference	DS-13186-95A	DS-13186-95A
			phase	one	two
			Sweet Gas Service		
0	0	0	VALVES		
0	0	0	FLANGES/CONNECTIONS		
0	0	0	COMPRESSORS SEALS		
0	0	0	PSV TO ATM		
0	0	0	PSV TO VRS		
0	0	0	PUMP SEALS		
			Sweet Oil Service		
0	0	0	VALVES		
0	0	0	FLANGES/CONNECTIONS		
0	0	0	PSV TO ATM		
0	0	0	PSV TO VRS		
0	0	0	PUMP SEALS		
			Sour Gas Service		
18	18	36	VALVES	18	18
43	43	86	FLANGES/CONNECTIONS	43	43
0	0	0	COMPRESSORS SEALS	0	0
0	0	0	PSV TO ATM	0	0
1	1	2	PSV TO VRS	1	1
0	0	0	PUMP SEALS	0	0
			Sour Oil Service		
26	26	52	VALVES	26	26
72	72	144	FLANGES/CONNECTIONS	72	72
0	0	0	PSV TO ATM	0	0
0	0	0	PSV TO VRS	0	0
0	0	0	PUMP SEALS	0	0

			Drop down list -->	Liquid Pumps	Liquid Pumps			Liquid Pumps	Liquid Pumps														Atmospheric Tank	Atmospheric Tank			IGF	IGF	Stock Oil Cooling	Stock Oil Cooling	Stock Oil Cooling	Stock Oil Cooling
			WCP	P 3040	P 3050			P 3140	P 3150														T 3030	T 3130			V 3060	V 3160	FF 3010	FF 3020	FF310	FF3120
			equipment name	IGF Charge Pump	IGF Charge Pump	IGF Eductor Pump	IGF Eductor Pump	IGF Charge Pump	IGF Charge Pump	IGF Eductor Pump	IGF Eductor Pump	Filter Feed Pump	Filter Feed Pump	Desander Pump	Desander Pump	Filter Feed Pump	Filter Feed Pump	Desander Pump	Desander Pump	Backwash Skim Pump	Backwash Skim Pump	Clarifier Tank	Clarifier Tank	Filter Feed Tank	Filter Feed Tank	IGF Unit	IGF Unit	Produced Water Cooler	Produced Water Cooler	Produced Water Cooler	Produced Water Cooler
			take-off reference	DS-13186-84A	DS-13186-84A	#N/A	#N/A	DS-13186-84A	DS-13186-84A	#N/A	#N/A	#N/A	#N/A	#N/A	#N/A	#N/A	#N/A	#N/A	#N/A	#N/A	#N/A	DS-13186-86A	DS-13186-86A	#N/A	#N/A	DS-13186-79	DS-13186-79	DS-13186-73C	DS-13186-73C	DS-13186-73C	DS-13186-73C
			phase	one	one	one	one	two	two	two	two	one	one	one	one	two	two	two	two	one	one	one	two	one	two	one	two	one	one	two	two
			Sweet Gas Service																													
25	25	50	VALVES	0	0			0	0													4	4			21	21	0	0	0	0
92	92	184	FLANGES/CONNECTIONS	0	0			0	0													19	19			73	73	0	0	0	0
0	0	0	COMPRESSORS SEALS	0	0			0	0													0	0			0	0	0	0	0	0
1	1	2	PSV TO ATM	0	0			0	0													1	1			0	0	0	0	0	0
3	3	6	PSV TO VRS	0	0			0	0													1	1			2	2	0	0	0	0
0	0	0	PUMP SEALS	0	0			0	0													0	0			0	0	0	0	0	0
			Sweet Oil Service																													
190	190	380	VALVES	9	9			9	9													29	29			79	79	32	32	32	32
529	529	1,058	FLANGES/CONNECTIONS	14	14			14	14													59	59			252	252	95	95	95	95
1	1	2	PSV TO ATM	0	0			0	0													0	0			1	1	0	0	0	0
2	2	4	PSV TO VRS	0	0			0	0													0	0			0	0	1	1	1	1
6	6	12	PUMP SEALS	1	1			1	1													0	0			4	4	0	0	0	0

			Drop down list -->	CENTRIFUGE	CENTRIFUGE	S/T Heat Exchanger	Liquid Pumps	Liquid Pumps	Liquid Pumps	Liquid Pumps	Liquid Pumps	Liquid Pumps	Liquid Pumps	Liquid Pumps	Liquid Pumps	Liquid Pumps	Liquid Pumps	Liquid Pumps	Liquid Pumps	Sludge Separation Tank	Skim Oil Surge Tank	Sludge Separation Tank	Skim Oil Surge Tank	Treater
			SCP	CF 7060	CF 7170	HX 7330	P 7040	P 7050	P 7080	P 7090	P 7100	P 7110	P 7150	P 7160	P 7190	P 7200	P 7210	P 7220	T 7030	T 7070	T 7140	T 7180	V 7340
			equipment name	Sludge Liquid Desanding	Sludge Liquid Desanding	Emulsion/Steam S/T Exchanger	Centrifuge Feed Pump	Centrifuge Feed Pump	Skim Oil Tank Oil Transfer Pump	Skim Oil Tank Oil Transfer Pump	Skim Oil Tank Water Transfer Pump	Skim Oil Tank Water Transfer Pump	Centrifuge Feed Charge Pump	Centrifuge Feed Charge Pump	Skim Oil Tank Oil Transfer Pump	Skim Oil Tank Oil Transfer Pump	Skim Oil Tank Water Transfer Pump	Skim Oil Tank Water Transfer Pump	Sludge Separation Tank	Skim Oil Tank	Sludge Separation Tank	Skim Oil Tank	Fresh Treater Horizontal Vessel
			take-off reference	DS-13186-70	DS-13186-70	DS-13186-78A	DS-13186-84A	DS-13186-84A	DS-13186-84A	DS-13186-84A	DS-13186-84A	DS-13186-84A	DS-13186-84A	DS-13186-84A	DS-13186-84A	DS-13186-84A	DS-13186-84A	DS-13186-84A	DS-13186-71	DS-13186-90	DS-13186-71	DS-13186-90	DS-13186-77A
			phase	one	two	one	one	one	one	one	one	one	two	two	two	two	two	two	one	one	two	two	one
Phase 1	**Phase 2**	**Project Total**	**Sweet Gas Service**																				
64	23	87	VALVES	0	0	0	0	0	0	0	0	0	0	0	0	0	0	0	4	19	4	19	41
210	78	288	FLANGES/CONNECTIONS	0	0	0	0	0	0	0	0	0	0	0	0	0	0	0	19	59	19	59	132
0	0	0	COMPRESSORS SEALS	0	0	0	0	0	0	0	0	0	0	0	0	0	0	0	0	0	0	0	0
1	1	2	PSV TO ATM	0	0	0	0	0	0	0	0	0	0	0	0	0	0	0	0	1	0	1	0
4	3	7	PSV TO VRS	0	0	0	0	0	0	0	0	0	0	0	0	0	0	0	2	1	2	1	1
0	0	0	PUMP SEALS	0	0	0	0	0	0	0	0	0	0	0	0	0	0	0	0	0	0	0	0
			Sweet Oil Service																				
165	139	304	VALVES	19	19	6	9	9	9	9	9	9	9	9	9	9	9	9	22	44	22	44	20
404	329	733	FLANGES/CONNECTIONS	51	51	14	14	14	14	14	14	14	14	14	14	14	14	14	67	127	67	127	61
0	0	0	PSV TO ATM	0	0	0	0	0	0	0	0	0	0	0	0	0	0	0	0	0	0	0	0
0	0	0	PSV TO VRS	0	0	0	0	0	0	0	0	0	0	0	0	0	0	0	0	0	0	0	0
6	6	12	PUMP SEALS	0	0	0	1	1	1	1	1	1	1	1	1	1	1	1	0	0	0	0	0

			Drop down list -->	Produced Gas Steam Generator					Vertical Separator				
			PGSG	SG 6030					V 6050				
			equipment name	SYTEC - 82.5 MMBTU/hr	SO2/WESP 25% Caustic Tank	WESP 1% Caustic Tank	SO2/ Waste Tank	Steam-Liquid Separator	Fuel Gas Scrubber	SO2 Primary Absorber	SO2 Secondary Absorber	WESP	WESP Vent Stack
			take-off reference	DS-13186-96A					DS-13186-96A				
			phase	one					one				
			Sweet Gas Service										
38	0	38	VALVES	20					18				
102	0	102	FLANGES/CONNECTIONS	59					43				
0	0	0	COMPRESSORS SEALS	0					0				
0	0	0	PSV TO ATM	0					0				
1	0	1	PSV TO VRS	0					1				
0	0	0	PUMP SEALS	0					0				
			Sweet Oil Service										
26	0	26	VALVES	0					26				
72	0	72	FLANGES/CONNECTIONS	0					72				
0	0	0	PSV TO ATM	0					0				
0	0	0	PSV TO VRS	0					0				
0	0	0	PUMP SEALS	0					0				

			Drop down list -->	Stock Oil Cooling	Stock Oil Cooling						Vapor Recovery Compressor Recovery Compressor Skid								Liquid Pumps	Liquid Pumps			Liquid Pumps	Liquid Pumps		Liquid Pumps	Liquid Pumps		Vertical Separator		Vertical Separator	Vertical Separator
			CPP-Utilities	FF 9020	FF 9030						K 9100	K 9110							P 9040	P 9050			P 9570	P 9580		P 9610	P 9620		V 9010		V 9560	V 9600
			equipment name	COS/LOS Tank Vapor Cooling	COS/LOS Tank Vapor Cooling	WSP Tank Vapor Cooling	WSP Tank Vapor Cooling	WSP TVR Skid 1 Aftercooler	WSP TVR Skid 2 Aftercooler	Standby Generator	COS/LOS TVR Skid 1 Compressor	COS/LOS TVR Skid 2 Compressor	WSP TVR Skid 1 Compressor	WSP TVR Skid 2 Compressor	COS/LOS TVR Scrubber Condensate Pump1	COS/LOS TVR Scrubber Condensate Pump2	WSP TVR Scrubber Condensate Pump1	WSP TVR Scrubber Condensate Pump2	Drain Tank Liquids Pump	Drain Tank Liquids Pump	Drain Tank Containment Pump	Drain Tank Liquids Pump	Drain Tank Liquids Pump	Drain Tank Containment Pump	COS/LOS TVR Main Inlet Scrubber	WSP TVR Main Inlet Scrubber	Drain Tank	Drain Tank
			take-off reference	DS-13186-73C	DS-13186-73C	#N/A	#N/A	#N/A	#N/A	#N/A	DS-13186-94	DS-13186-94	#N/A	#N/A	DS-13186-84A	DS-13186-84A	#N/A	#N/A	DS-13186-84A	DS-13186-84A	#N/A	DS-13186-84A	DS-13186-84A	#N/A	DS-13186-95A	#N/A	DS-13186-95A	DS-13186-95A
			phase	one	one	one	one	one	two	one	one	two	one	two	one	one	one	two	one	two	two	one	two	two	one	one	two	one	one	one	one
			Sweet Gas Service																													
105	51	156	VALVES	0	0						51	51			0	0			0	0		0	0		18		18		18	18
314	185	499	FLANGES/CONNECTIONS	0	0						185	185			0	0			0	0		0	0		43		43		43	43
1	1	2	COMPRESSORS SEALS	0	0						1	1			0	0			0	0		0	0		0		0		0	0
0	0	0	PSV TO ATM	0	0						0	0			0	0			0	0		0	0		0		0		0	0
5	2	7	PSV TO VRS	0	0						2	2			0	0			0	0		0	0		1		1		1	1
0	0	0	PUMP SEALS	0	0						0	0			0	0			0	0		0	0		0		0		0	0
			Sweet Oil Service																													
225	65	290	VALVES	32	32						47	47			9	9			9	9		9	9		26		26		26	26
619	185	804	FLANGES/CONNECTIONS	95	95						157	157			14	14			14	14		14	14		72		72		72	72
0	0	0	PSV TO ATM	0	0						0	0			0	0			0	0		0	0		0		0		0	0
2	0	2	PSV TO VRS	1	1						0	0			0	0			0	0		0	0		0		0		0	0
8	6	14	PUMP SEALS	0	0						4	4			1	1			1	1		1	1		0		0		0	0

			Drop down list -->	Flare	Produced Gas Cooler	Produced Gas Cooler	Liquid Pumps	Liquid Pumps	Liquid Pumps	Liquid Pumps	*ROD GAS SCRUBBER	PROD GAS SCRUBBER	SULFATREAT UNIT	SULFATREAT UNIT	s-Liquid Separator Vess	s-Liquid Separator Ves	SulferOx Plant
			PGTP	F 5910	FF 5020	FF 5030	P 5890	P 5900	P 5980	P 5990	V 5010	V 5040	V 5660	V 5670	V 5880	V 5970	X 5000
			equipment name	Emergency Flare	Produced Gas Cooler	Produced Gas Cooler	Flare KO Condensate Pump	Flare KO Condensate Pump	Swirl Gas Scrubber Condensate Pump	Swirl Gas Scrubber Condensate Pump	Warm Gas Scrubber	Cooled Gas Scrubber	H2S Scavenger 2	H2S Scavenger 1	Flare KO Vessel	Swirl Protocol Gas Scrubber	SulferOx Plant
			take-off reference	DS-13186-96F	DS-13186-79A	DS-13186-79A	DS-13186-84A	DS-13186-84A	DS-13186-84A	DS-13186-84A	DS-13186-85	DS-13186-85	DS-13186-88	DS-13186-88	DS-13186-80A	DS-13186-80A	DS-13186-89
			phase	one	one	one	one	one	one	one	one	one	one	one	one	one	two
			Sweet Gas Service		locate at GS	locate at GS					locate at GS	locate at GS	locate at GS	locate at GS			
50	0	50	VALVES	6			0	0	0	0					22	22	
154	0	154	FLANGES/CONNECTIONS	18			0	0	0	0					68	68	
0	0	0	COMPRESSORS SEALS	0			0	0	0	0					0	0	
0	0	0	PSV TO ATM	0			0	0	0	0					0	0	
2	0	2	PSV TO VRS	0			0	0	0	0					1	1	
0	0	0	PUMP SEALS	0			0	0	0	0					0	0	
			Sweet Oil Service														
36	0	36	VALVES	0			9	9	9	9					0	0	
56	0	56	FLANGES/CONNECTIONS	0			14	14	14	14					0	0	
0	0	0	PSV TO ATM	0			0	0	0	0					0	0	
0	0	0	PSV TO VRS	0			0	0	0	0					0	0	
4	0	4	PUMP SEALS	0			1	1	1	1					0	0	
			Sour Gas Service														
180	102	282	VALVES		32	32					30	30	28	28			102
544	414	958	FLANGES/CONNECTIONS		95	95					96	96	81	81			414
0	0	0	COMPRESSORS SEALS		0	0					0	0	0	0			0
0	0	0	PSV TO ATM		0	0					0	0	0	0			0
6	9	15	PSV TO VRS		1	1					1	1	1	1			9
0	2	2	PUMP SEALS		0	0					0	0	0	0			2
			Sour Oil Service														
0	0	0	VALVES		0	0					0	0	0	0			0
0	0	0	FLANGES/CONNECTIONS		0	0					0	0	0	0			0
0	0	0	PSV TO ATM		0	0					0	0	0	0			0
0	0	0	PSV TO VRS		0	0					0	0	0	0			0
0	0	0	PUMP SEALS		0	0					0	0	0	0			0

			Drop down list -->	Production Tree	Production Tree	Well ESD Skid	Well ESD Skid	stionary Well Measurement	ionary Well Measurem	CVR Liquid Traps	CVR Liquid Traps		
			Production Gathering	83	80	83	80	21	20	10	10		
			equipment name	production wells	production wells								
			take-off reference	DS-13186-96B	DS-13186-96B	DS-13186-96C	DS-13186-96C	DS-13186-96D	DS-13186-96D	DS-13186-96E	DS-13186-96E		
			phase	one	two	one	two	one	two	one	two		
			Sour Gas Service										
0	0	0	VALVES	0	0	0	0	0	0	0	0		
0	0	0	FLANGES/CONNECTIONS	0	0	0	0	0	0	0	0		
0	0	0	COMPRESSORS SEALS	0	0	0	0	0	0	0	0		
0	0	0	PSV TO ATM	0	0	0	0	0	0	0	0		
0	0	0	PSV TO VRS	0	0	0	0	0	0	0	0		
0	0	0	PUMP SEALS	0	0	0	0	0	0	0	0		
			Sour Oil Service										
2,643	2,550	5,193	VALVES	249	240	2241	2160	63	60	90	90		
3,650	3,520	7,170	FLANGES/CONNECTIONS	996	960	2407	2320	147	140	100	100		
0	0	0	PSV TO ATM	0	0	0	0	0	0	0	0		
0	0	0	PSV TO VRS	0	0	0	0	0	0	0	0		
10	10	20	PUMP SEALS	0	0	0	0	0	0	10	10		

LOADING RACK EMISSION CALCULATION (ver 3.0)

Attachment:	E
Company:	Aera Energy
Facility:	East Cat Canyon
File Name:	Crude Oil shipping

Phase 1
One 10,000 Bbl storage tank
Shipping 7000 bbl/day

Reference: Loading Rack
Rack Type: Enter X as Appropriate

		S Factor
Submerged loading of a clean cargo tank		0.50
Submerged loading: Dedicated normal service	X	0.60
Submerged loading: Dedicated vapor balance service		1.00
Splash loading of a clean cargo tank		1.45
Splash loading: Dedicated normal service		1.45
Splash loading: Dedicated vapor balance service		1.00

Input data			Reference
S = Saturation Factor	0.60	See AP-42 Table 4.4-1	2
M = Molecular Weight	50	Crude Oil: Default = 50 lb/lb-mole	3
P = True Vapor Pressure (psia)	0.500	See AP-42 Table 12.3-5	1
T = Liquid Temperature ^{0}R	660	200 ^{0}F + 460 = ^{0}R	5
R = Loading Rate (bbl/hr)	416.67	17,500 gallons (42 gallons = 1 bbl)	1
C = Truck Storage Capacity (bbl)	10,000	420,000 gallons (42 gallons = 1 bbl)	1
D = Daily Production (bbl)	10,000	420,000 gallons (42 gallons = 1 bbl)	
A = Annual Production (bbl)	3,650,000	153,300,000 gallons (42 gallons = 1 bbl)	1
eff = Vapor Recovery Efficiency	0.95	Default = 0.95	1
ROC/THC = Reactivity	0.885	Crude Oil: Default = 0.885	

HLPD = hours loading per day = (C/R) if < 24 =	**24.00**	**hours/day**
HLPY = hours loading per year = (A/R) =	**8,760.00**	**hours/year**
L_L = Loading loss (lb/1000 gal) = 12.46 (S)(P)(M)/T =	**0.2832**	**lb/1000 gal**

Total Uncontrolled Hydrocarbon Losses:

Hourly
THL_H = (R)(42 gal/bbl)(L_L/1000) = **4.96** **lbs/hr**

Daily
THL_D = (THL_H)(HLPD) = **118.94** **lbs/day**

Annual
THL_A = (HLPY)((THL_H)(1/2000) = **21.71** **TPY**

Total Controlled Hydrocarbon Losses:

Hourly
THL_{HC} = (THL_H)(1-eff) = **0.25** lbs/hr

Daily
THL_{DC} = (THL_D)(1-eff) = **5.95** lbs/day

Annual
THL_{AC} = (THL_A)(1-eff) = **1.09** TPY

Processed by: Doug McCormick Date: July 15, 2015

Notes:

1. Data provided by the applicant
2. AP-42, (Chapter 5, 5th Edition, January 1995), Table 5.2-1
3. If not otherwise provided, crude oil is assumed to be 50 lb/lb-mole.
4. If not otherwise provided, vapor pressure is calculated from CARB AB-2588 Guidelines, page 103, eq. 25
5. R is calculated by adding 460 to ^{0}F.

Revised: October 8, 2007

LOADING RACK EMISSION CALCULATION (ver 3.0)

Attachment:	E
Company:	Aera Energy
Facility:	East Cat Canyon
File Name:	Crude Oil shipping

Phase 2 Increase
Second 10,000 Bbl storage tank
Shipping an additional 7000 bbl/day

Reference: Loading Rack

Rack Type: Enter X as Appropriate		S Factor
Submerged loading of a clean cargo tank		0.50
Submerged loading: Dedicated normal service	X	0.60
Submerged loading: Dedicated vapor balance service		1.00
Splash loading of a clean cargo tank		1.45
Splash loading: Dedicated normal service		1.45
Splash loading: Dedicated vapor balance service		1.00

Input data			Reference
S = Saturation Factor	**0.60**	See AP-42 Table 4.4-1	2
M = Molecular Weight	**50**	Crude Oil: Default = 50 lb/lb-mole	3
P = True Vapor Pressure (psia)	**0.500**	See AP-42 Table 12.3-5	1
T = Liquid Temperature ^{0}R	**660**	200 ^{0}F + 460 = ^{0}R	5
R = Loading Rate (bbl/hr)	**416.67**	17,500 gallons (42 gallons = 1 bbl)	1
C = Storage Capacity (bbl)	**10,000**	420,000 gallons (42 gallons = 1 bbl)	1
D = Daily Production (bbl)	**10,000**	420,000 gallons (42 gallons = 1 bbl)	
A = Annual Production (bbl)	**3,650,000**	153,300,000 gallons (42 gallons = 1 bbl)	1
eff = Vapor Recovery Efficiency	**0.95**	Default = 0.95	1
ROC/THC = Reactivity	**0.885**	Crude Oil: Default = 0.885	

HLPD = hours loading per day = (C/R) if < 24 =	**24.00**	**hours/day**
HLPY = hours loading per year = (A/R) =	**8,760.00**	**hours/year**
L_L = Loading loss (lb/1000 gal) = 12.46 (S)(P)(M)/T =	**0.2832**	**lb/1000 gal**

Total Uncontrolled Hydrocarbon Losses:

Hourly
THL_H = (R)(42 gal/bbl)(L_L/1000) = **4.96** **lbs/hr**

Daily
THL_D = (THL_H)(HLPD) = **118.94** **lbs/day**

Annual
THL_A = (HLPY)((THL_H)(1/2000) = **21.71** **TPY**

Total Controlled Hydrocarbon Losses:

Hourly
THL_{HC} = (THL_H)(1-eff) = **0.25** lbs/hr

Daily
THL_{DC} = (THL_D)(1-eff) = **5.95** lbs/day

Annual
THL_{AC} = (THL_A)(1-eff) = **1.09** TPY

Processed by: Name Date: July 30, 2015

Notes:

1. Data provided by the applicant
2. AP-42, (Chapter 5, 5th Edition, January 1995), Table 5.2-1
3. If not otherwise provided, crude oil is assumed to be 50 lb/lb-mole.
4. If not otherwise provided, vapor pressure is calculated from CARB AB-2588 Guidelines, page 103, eq. 25
5. R is calculated by adding 460 to ^{0}F.

Revised: October 8, 2007

Attachment: E

Date: *01/12/16*

BOILER / STEAM GENERATOR CALCULATION WORKSHEET (ver. 6.0)

DATA

Permit No.	New	
Owner/Operator	Aera Energy	
Facility/Lease	East Cat Canyon	
Boiler Type	Firetube	
Boiler Mfg.	PLC Industries	
Boiler Model No.	NA	
Boiler Serial/ID No.	SG - 8620	
Boiler Horsepower	no data	Bhp
Burner Type	Natural Gas	
Burner Mfg.	North American	
Burner Model No.	4231-85-GLE Ultra Low Nox	
Max. Firing Rate of Burner	85.000	MMBtu/hr
Max. Annual Heat Input	744,600.000	MMBtu/yr
Daily Operating schedule	24	hrs/day
Yearly Load factor (%)	100	%
Fuel Type	PUC Natural Gas	
High Heating Value	1,050	Btu/scf
Sulfur Content of Fuel	16.00	ppmvd as H2S
Nitrogen Content of Fuel	-	wt. % N

Boiler Classification	Industrial		
Firing Type	Other Type		
PM Emission Factor	0.0030	lb/MMBtu	
PM_{10} Emission Factor	0.0030	lb/MMBtu	
NO_x Emission Factor	0.0061	lb/MMBtu	5 ppmv @ 3% O2
SO_x Emission Factor	0.0029	lb/MMBtu	
CO Emission Factor	0.0184	lb/MMBtu	
ROC Emission Factor	0.0016	lb/MMBtu	4 ppmv @ 3% O2

RESULTS

	lb/hr	lb/day	TPY
Nitrogen Oxides (as NO_2)	0.51	12.34	2.25
Sulfur Oxides (as SO_2)	0.24	5.81	1.06
PM_{10}	0.26	6.12	1.12
Total Suspended Particulate (PM)	0.26	6.12	1.12
Carbon Monoxide	1.56	37.56	6.85
Reactive Organic Compounds (ROC)	0.14	3.26	0.60

GHG Emissions	Metric TPY
CO2	39478.69
CH4	0.7446
N2O	0.07446
CO2e	39517.41

Hourly Heat Release	85.000	MMBtu/hr
Daily Heat Release	2,040.000	MMBtu/day
Annual Heat Release	744,600.000	MMBtu/yr
Rule 342 Applicability	744.6	Billion Btu/yr

Attachment: E

Date: 01/12/16

BOILER / STEAM GENERATOR CALCULATION WORKSHEET (ver. 6.0)

DATA

Permit No.	New	
Owner/Operator	Aera Energy	
Facility/Lease	East Cat Canyon	
Boiler Type	Firetube	
Boiler Mfg.	PLC Industries	
Boiler Model No.	NA	
Boiler Serial/ID No.	SG - 8520	
Boiler Horsepower	no data	Bhp
Burner Type	Natural Gas	
Burner Mfg.	North American	
Burner Model No.	4231-85-GLE Ultra Low Nox	
Max. Firing Rate of Burner	85.000	MMBtu/hr
Max. Annual Heat Input	744,600.000	MMBtu/yr
Daily Operating schedule	24	hrs/day
Yearly Load factor (%)	100	%
Fuel Type	PUC Natural Gas	
High Heating Value	1,050	Btu/scf
Sulfur Content of Fuel	16.00	ppmvd as H2S
Nitrogen Content of Fuel	-	wt. % N

Boiler Classification	Industrial		
Firing Type	Other Type		
PM Emission Factor	0.0030	lb/MMBtu	
PM_{10} Emission Factor	0.0030	lb/MMBtu	
NO_x Emission Factor	0.0061	lb/MMBtu	5 ppmv @ 3% O2
SO_x Emission Factor	0.0029	lb/MMBtu	
CO Emission Factor	0.0184	lb/MMBtu	
ROC Emission Factor	0.0016	lb/MMBtu	4 ppmv @ 3% O2

RESULTS

	lb/hr	lb/day	TPY
Nitrogen Oxides (as NO_2)	0.51	12.34	2.25
Sulfur Oxides (as SO_2)	0.24	5.81	1.06
PM_{10}	0.26	6.12	1.12
Total Suspended Particulate (PM)	0.26	6.12	1.12
Carbon Monoxide	1.56	37.56	6.85
Reactive Organic Compounds (ROC)	0.14	3.26	0.60

GHG Emissions	Metric TPY
CO2	39478.69
CH4	0.7446
N2O	0.07446
CO2e	39517.41

Hourly Heat Release	85.000	MMBtu/hr
Daily Heat Release	2,040.000	MMBtu/day
Annual Heat Release	744,600.000	MMBtu/yr
Rule 342 Applicability	744.6	Billion Btu/yr

Attachment: E

Date: *01/12/16*

BOILER / STEAM GENERATOR CALCULATION WORKSHEET (ver. 6.0)

DATA

Permit No.	New	
Owner/Operator	Aera Energy	
Facility/Lease	East Cat Canyon	
Boiler Type	Firetube	
Boiler Mfg.	PLC Industries	
Boiler Model No.	NA	
Boiler Serial/ID No.	SG - 8420	
Boiler Horsepower	no data	Bhp
Burner Type	Natural Gas	
Burner Mfg.	North American	
Burner Model No.	4231-85-GLE Ultra Low Nox	
Max. Firing Rate of Burner	85.000	MMBtu/hr
Max. Annual Heat Input	744,600.000	MMBtu/yr
Daily Operating schedule	24	hrs/day
Yearly Load factor (%)	100	%
Fuel Type	PUC Natural Gas	
High Heating Value	1,050	Btu/scf
Sulfur Content of Fuel	16.00	ppmvd as H2S
Nitrogen Content of Fuel	-	wt. % N

Boiler Classification	Industrial		
Firing Type	Other Type		
PM Emission Factor	0.0030	lb/MMBtu	
PM_{10} Emission Factor	0.0030	lb/MMBtu	
NO_x Emission Factor	0.0061	lb/MMBtu	5 ppmv @ 3% O2
SO_x Emission Factor	0.0029	lb/MMBtu	
CO Emission Factor	0.0184	lb/MMBtu	
ROC Emission Factor	0.0016	lb/MMBtu	4 ppmv @ 3% O2

RESULTS

	lb/hr	lb/day	TPY
Nitrogen Oxides (as NO_2)	0.51	12.34	2.25
Sulfur Oxides (as SO_2)	0.24	5.81	1.06
PM_{10}	0.26	6.12	1.12
Total Suspended Particulate (PM)	0.26	6.12	1.12
Carbon Monoxide	1.56	37.56	6.85
Reactive Organic Compounds (ROC)	0.14	3.26	0.60

GHG Emissions	Metric TPY
CO2	39478.69
CH4	0.7446
N2O	0.07446
CO2e	39517.41

Hourly Heat Release	85.000	MMBtu/hr
Daily Heat Release	2,040.000	MMBtu/day
Annual Heat Release	744,600.000	MMBtu/yr
Rule 342 Applicability	744.6	Billion Btu/yr

Attachment: E

Date: *01/12/16*

BOILER / STEAM GENERATOR CALCULATION WORKSHEET (ver. 6.0)

DATA

Permit No.	New	
Owner/Operator	Aera Energy	
Facility/Lease	East Cat Canyon	
Boiler Type	Firetube	
Boiler Mfg.	PLC Industries	
Boiler Model No.	NA	
Boiler Serial/ID No.	SG - 8320	
Boiler Horsepower	no data	Bhp
Burner Type	Natural Gas	
Burner Mfg.	North American	
Burner Model No.	4231-85-GLE Ultra Low Nox	
Max. Firing Rate of Burner	85.000	MMBtu/hr
Max. Annual Heat Input	744,600.000	MMBtu/yr
Daily Operating schedule	24	hrs/day
Yearly Load factor (%)	100	%
Fuel Type	PUC Natural Gas	
High Heating Value	1,050	Btu/scf
Sulfur Content of Fuel	16.00	ppmvd as H2S
Nitrogen Content of Fuel	-	wt. % N

Boiler Classification	Industrial		
Firing Type	Other Type		
PM Emission Factor	0.0030	lb/MMBtu	
PM_{10} Emission Factor	0.0030	lb/MMBtu	
NO_x Emission Factor	0.0061	lb/MMBtu	5 ppmv @ 3% O2
SO_x Emission Factor	0.0029	lb/MMBtu	
CO Emission Factor	0.0184	lb/MMBtu	
ROC Emission Factor	0.0016	lb/MMBtu	4 ppmv @ 3% O2

RESULTS

	lb/hr	lb/day	TPY
Nitrogen Oxides (as NO_2)	0.51	12.34	2.25
Sulfur Oxides (as SO_2)	0.24	5.81	1.06
PM_{10}	0.26	6.12	1.12
Total Suspended Particulate (PM)	0.26	6.12	1.12
Carbon Monoxide	1.56	37.56	6.85
Reactive Organic Compounds (ROC)	0.14	3.26	0.60

GHG Emissions	Metric TPY
CO2	39478.69
CH4	0.7446
N2O	0.07446
CO2e	39517.41

Hourly Heat Release	85.000	MMBtu/hr
Daily Heat Release	2,040.000	MMBtu/day
Annual Heat Release	744,600.000	MMBtu/yr
Rule 342 Applicability	744.6	Billion Btu/yr

Attachment: E

Date: 01/12/16

BOILER / STEAM GENERATOR CALCULATION WORKSHEET (ver. 6.0)

DATA

Permit No.	New	
Owner/Operator	Aera Energy	
Facility/Lease	East Cat Canyon	
Boiler Type	Firetube	
Boiler Mfg.	PLC Industries	
Boiler Model No.	NA	
Boiler Serial/ID No.	SG - 8220	
Boiler Horsepower	no data	Bhp
Burner Type	Natural Gas	
Burner Mfg.	North American	
Burner Model No.	4231-85-GLE Ultra Low Nox	
Max. Firing Rate of Burner	85.000	MMBtu/hr
Max. Annual Heat Input	744,600.000	MMBtu/yr
Daily Operating schedule	24	hrs/day
Yearly Load factor (%)	100	%
Fuel Type	PUC Natural Gas	
High Heating Value	1,050	Btu/scf
Sulfur Content of Fuel	16.00	ppmvd as H2S
Nitrogen Content of Fuel	-	wt. % N

Boiler Classification	Industrial		
Firing Type	Other Type		
PM Emission Factor	0.0030	lb/MMBtu	
PM_{10} Emission Factor	0.0030	lb/MMBtu	
NO_x Emission Factor	0.0061	lb/MMBtu	5 ppmv @ 3% O2
SO_x Emission Factor	0.0029	lb/MMBtu	
CO Emission Factor	0.0184	lb/MMBtu	
ROC Emission Factor	0.0016	lb/MMBtu	4 ppmv @ 3% O2

RESULTS

	lb/hr	lb/day	TPY
Nitrogen Oxides (as NO_2)	0.51	12.34	2.25
Sulfur Oxides (as SO_2)	0.24	5.81	1.06
PM_{10}	0.26	6.12	1.12
Total Suspended Particulate (PM)	0.26	6.12	1.12
Carbon Monoxide	1.56	37.56	6.85
Reactive Organic Compounds (ROC)	0.14	3.26	0.60

GHG Emissions	Metric TPY
CO2	39478.69
CH4	0.7446
N2O	0.07446
CO2e	39517.41

Hourly Heat Release	85.000	MMBtu/hr
Daily Heat Release	2,040.000	MMBtu/day
Annual Heat Release	744,600.000	MMBtu/yr
Rule 342 Applicability	744.6	Billion Btu/yr

Attachment: E

Date: 01/12/16

BOILER / STEAM GENERATOR CALCULATION WORKSHEET (ver. 6.0)

DATA

Permit No.	New	
Owner/Operator	Aera Energy	
Facility/Lease	East Cat Canyon	
Boiler Type	Firetube	
Boiler Mfg.	PLC Industries	
Boiler Model No.	NA	
Boiler Serial/ID No.	SG - 8120	
Boiler Horsepower	no data	Bhp
Burner Type	Natural Gas	
Burner Mfg.	North American	
Burner Model No.	4231-85-GLE Ultra Low Nox	
Max. Firing Rate of Burner	85.000	MMBtu/hr
Max. Annual Heat Input	744,600.000	MMBtu/yr
Daily Operating schedule	24	hrs/day
Yearly Load factor (%)	100	%
Fuel Type	PUC Natural Gas	
High Heating Value	1,050	Btu/scf
Sulfur Content of Fuel	16.00	ppmvd as H2S
Nitrogen Content of Fuel	-	wt. % N

Boiler Classification	Industrial		
Firing Type	Other Type		
PM Emission Factor	0.0030	lb/MMBtu	
PM_{10} Emission Factor	0.0030	lb/MMBtu	
NO_x Emission Factor	0.0061	lb/MMBtu	5 ppmv @ 3% O2
SO_x Emission Factor	0.0029	lb/MMBtu	
CO Emission Factor	0.0184	lb/MMBtu	
ROC Emission Factor	0.0016	lb/MMBtu	4 ppmv @ 3% O2

RESULTS

	lb/hr	lb/day	TPY
Nitrogen Oxides (as NO_2)	0.51	12.34	2.25
Sulfur Oxides (as SO_2)	0.24	5.81	1.06
PM_{10}	0.26	6.12	1.12
Total Suspended Particulate (PM)	0.26	6.12	1.12
Carbon Monoxide	1.56	37.56	6.85
Reactive Organic Compounds (ROC)	0.14	3.26	0.60

GHG Emissions	Metric TPY
CO2	39478.69
CH4	0.7446
N2O	0.07446
CO2e	39517.41

Hourly Heat Release	85.000	MMBtu/hr
Daily Heat Release	2,040.000	MMBtu/day
Annual Heat Release	744,600.000	MMBtu/yr
Rule 342 Applicability	744.6	Billion Btu/yr

Attachment: E

Date: *01/11/16*

BOILER / STEAM GENERATOR CALCULATION WORKSHEET (ver. 6.0)

DATA

Permit No.	New		
Owner/Operator	Aera Energy		
Facility/Lease	East Cat Canyon		
Boiler Type	Firetube		
Boiler Mfg.	PCL Industries or Equivalent		
Boiler Model No.	NA		
Boiler Serial/ID No.	SG - 6030		
Boiler Horsepower	no data	Bhp	
Burner Type	Natural Gas		
Burner Mfg.	North American		
Burner Model No.	4231-62.5-GLE Ultra Low Nox		
Max. Firing Rate of Burner	62.500	MMBtu/hr	
Max. Annual Heat Input	547,500.000	MMBtu/yr	
Daily Operating schedule	24	hrs/day	
Yearly Load factor (%)	100.00	%	Produced Gas flared for 240 hr/yr
Fuel Type	PUC Natural Gas and Produced Gas		
High Heating Value	1050 - 1200	Btu/scf	
Sulfur Content of Fuel	80.00	ppmvd as H2S	
Nitrogen Content of Fuel	-	wt. % N	
Boiler Classification	Industrial		
Firing Type	Other Type		
PM Emission Factor	0.0076	lb/MMBtu	
PM_{10} Emission Factor	0.0076	lb/MMBtu	
NO_x Emission Factor	0.0085	lb/MMBtu	7 ppmv @ 3% O2
SO_x Emission Factor	0.0127	lb/MMBtu	
CO Emission Factor	0.0184	lb/MMBtu	
ROC Emission Factor	0.0016	lb/MMBtu	4 ppmv @ 3% O2

RESULTS

	lb/hr	lb/day	TPY
Nitrogen Oxides (as NO_2)	0.53	12.71	2.32
Sulfur Oxides (as SO_2)	0.79	19.05	3.48
PM_{10}	0.48	11.40	2.08
Total Suspended Particulate (PM)	0.48	11.40	2.08
Carbon Monoxide	1.15	27.62	5.04
Reactive Organic Compounds (ROC)	0.10	2.40	0.44

GHG Emissions	Metric TPY
CO2	29028.45
CH4	0.5475
N2O	0.05475
CO2e	29056.92

Hourly Heat Release	62.500	MMBtu/hr
Daily Heat Release	1,500.000	MMBtu/day
Annual Heat Release	547,500.000	MMBtu/yr
Rule 342 Applicability	547.5	Billion Btu/yr

Press Enter to Return to the Main Menu

FIXED ROOF TANK CALCULATION (AP-42: Chapter 7 Method)

Attachment:	E
Permit:	ATC XXXX
Date:	01/12/16
Tank:	T-9600
Name:	Drain Tank
Filename:	...\xxxx.xls
Distrcit:	Santa Barbara
Version:	Tank-2b.xls

Basic Input Data

liquid {1:G13, 2:G10, 3:G7, 4:C, 5:JP, 6:ker, 7:O2, 8:O6} =	4
liquid TVP =	0.5
if TVP is entered, enter TVP temperature (°F) =	180
tank heated {yes, no} =	yes
if tank is heated, enter temp (°F) =	180
vapor recovery system present? {yes, no} =	yes
is this a wash tank? {yes, no} =	no
will flashing losses occur in this tank? {yes, no} =	no
breather vent pressure setting range (psi) (def = 0.06):	0.06

Tank Data

diameter (feet) =		6
capacity (enter barrels in first col, gals will compute) =	100	4,200
conical or dome roof? {c, d} =		c
shell height (feet) =		20
roof height (def = 1):		1
ave liq height (feet):		10
color {1:Spec Al, 2:Diff Al, 3:Lite, 4:Med, 5:Rd, 6:Wh} =		4
condition {1: Good, 2: Poor} =		1
upstream pressure (psig) (def = 0 when no flashing occurs):		0

Liquid Data

	A	B
maximum daily throughput (bopd) =		50
Ann thruput (gal): (enter value in Column A if not max PTE)		7.665E+05
RVP (psia):		0.09788
°API gravity =		9

Computed Values

roof outage [1] (feet):		0.3
vapor space volume [2] (cubic feet):		291
turnovers [3] :		182.5
turnover factor [4] :		0.33
paint factor [5] :		0.68
surface temperatures (°R, °F)		
average [6] :	640	180
maximum [7] :	641.25	181.25
minimum [8] :	638.75	178.75
product factor [9] :		0.75
diurnal vapor ranges		
temperature [10] (fahrenheit degrees):		5
vapor pressure [11] (psia):		0.030783
molecular weight [12] (lb/lb-mol):		50
TVP [13] (psia) [adjusted for ave liquid surface temp]:		0.5
vapor density [14] (lb/cubic foot):		0.00364
vapor expansion factor [15] :		0.006
vapor saturation factor [16] :		0.785577
vented vapor volume (scf/bbl):		8
fraction ROG - flashing losses:		0.308
fraction ROG - evaporative losses:		0.885

Paint Factor Matrix

paint color	paint condition good	paint condition poor
spec alum	0.39	0.49
diff alum	0.60	0.68
lite grey	0.54	0.63
med grey	0.68	0.74
red	0.89	0.91
white	0.17	0.34

Molecular Weight Matrix

liquid	mol wt
gas rvp 13	62
gas rvp 10	66
gas rvp 7	68
crude oil	50
JP -4	80
jet kerosene	130
fuel oil 2	130
fuel oil 6	190

Adjusted TVP Matrix

liquid	TVP value
gas rvp 13	23.7
gas rvp 10	11.2
gas rvp 7	10.7
crude oil	0.5
JP -4	4.9
jet kerosene	0.0385
fuel oil 2	0.0422
fuel oil 6	0.00016

RVP Matrix

liquid	RVP value
gas rvp 13	13
gas rvp 10	10
gas rvp 7	7
crude oil	0.09788
JP -4	2.7
jet kerosene	0.029
fuel oil 2	0.022
fuel oil 6	0.00019

Long-Term VRU_Eff = 95.00%

Short-Term VRU_Eff = 95.00%

Emissions

	Uncontrolled ROC emissions lb/hr	lb/day	ton/year	Controlled ROC emissions lb/hr	lb/day	ton/year
breathing loss [17] =	0.00	0.00	0.00	0.00	0.00	0.00
working loss [18] =	0.01	0.27	0.05	0.00	0.01	0.00
flashing loss [19] =	0.00	0.00	0.00	0.00	0.00	0.00
TOTALS =	**0.01**	**0.28**	**0.05**	**0.00**	**0.01**	**0.00**

NOTES: see attachment for explanation of notes (1 through 19)

FIXED ROOF TANK CALCULATION (AP-42: Chapter 7 Method)

Basic Input Data	
liquid {1:G13, 2:G10, 3:G7, 4:C, 5:JP, 6:ker, 7:O2, 8:O6} =	4
liquid TVP =	0.5
if TVP is entered, enter TVP temperature (°F) =	180
tank heated {yes, no} =	yes
if tank is heated, enter temp (°F) =	180
vapor recovery system present? {yes, no} =	yes
is this a wash tank? {yes, no} =	no
will flashing losses occur in this tank? {yes, no} =	no
breather vent pressure setting range (psi) (def = 0.06):	0.06

Attachment:	E
Permit:	ATC XXXX
Date:	01/12/16
Tank:	T-9560
Name:	Drain Tank
Filename:	...\xxxx.xls
Distrcit:	Santa Barbara
Version:	Tank-2b.xls

Tank Data		
diameter (feet) =		6
capacity (enter barrels in first col, gals will compute) =	100	4,200
conical or dome roof? {c, d} =		c
shell height (feet) =		20
roof height (def = 1):		1
ave liq height (feet):		10
color {1:Spec Al, 2:Diff Al, 3:Lite, 4:Med, 5:Rd, 6:Wh} =		4
condition {1: Good, 2: Poor} =		1
upstream pressure (psig) (def = 0 when no flashing occurs):		0

Liquid Data	A	B
maximum daily throughput (bopd) =		50
Ann thruput (gal): (enter value in Column A if not max PTE)		7.665E+05
RVP (psia):		0.09788
°API gravity =		9

Paint Factor Matrix		
	paint condition	
paint color	good	poor
spec alum	0.39	0.49
diff alum	0.60	0.68
lite grey	0.54	0.63
med grey	0.68	0.74
red	0.89	0.91
white	0.17	0.34

Molecular Weight Matrix	
liquid	mol wt
gas rvp 13	62
gas rvp 10	66
gas rvp 7	68
crude oil	50
JP -4	80
jet kerosene	130
fuel oil 2	130
fuel oil 6	190

Computed Values		
roof outage [1] (feet):		0.3
vapor space volume [2] (cubic feet):		291
turnovers [3] :		182.5
turnover factor [4] :		0.33
paint factor [5] :		0.68
surface temperatures (°R, °F)		
average [6] :	640	180
maximum [7] :	641.25	181.25
minimum [8] :	638.75	178.75
product factor [9] :		0.75
diurnal vapor ranges		
temperature [10] (fahrenheit degrees):		5
vapor pressure [11] (psia):		0.030783
molecular weight [12] (lb/lb-mol):		50
TVP [13] (psia) [adjusted for ave liquid surface temp]:		0.5
vapor density [14] (lb/cubic foot):		0.00364
vapor expansion factor [15] :		0.006
vapor saturation factor [16] :		0.785577
vented vapor volume (scf/bbl):		8
fraction ROG - flashing losses:		0.308
fraction ROG - evaporative losses:		0.885

Adjusted TVP Matrix	
liquid	TVP value
gas rvp 13	23.7
gas rvp 10	11.2
gas rvp 7	10.7
crude oil	0.5
JP -4	4.9
jet kerosene	0.0385
fuel oil 2	0.0422
fuel oil 6	0.00016

RVP Matrix	
liquid	RVP value
gas rvp 13	13
gas rvp 10	10
gas rvp 7	7
crude oil	0.09788
JP -4	2.7
jet kerosene	0.029
fuel oil 2	0.022
fuel oil 6	0.00019

Long-Term VRU_Eff =	95.00%
Short-Term VRU_Eff =	95.00%

Emissions	Uncontrolled ROC emissions			Controlled ROC emissions		
	lb/hr	lb/day	ton/year	lb/hr	lb/day	ton/year
breathing loss [17] =	0.00	0.00	0.00	0.00	0.00	0.00
working loss [18] =	0.01	0.27	0.05	0.00	0.01	0.00
flashing loss [19] =	0.00	0.00	0.00	0.00	0.00	0.00
TOTALS =	**0.01**	**0.28**	**0.05**	**0.00**	**0.01**	**0.00**

NOTES: see attachment for explanation of notes (1 through 19)

FIXED ROOF TANK CALCULATION (AP-42: Chapter 7 Method)

Basic Input Data	
liquid {1:G13, 2:G10, 3:G7, 4:C, 5:JP, 6:ker, 7:O2, 8:O6} =	4
liquid TVP =	0.5
if TVP is entered, enter TVP temperature (°F) =	180
tank heated {yes, no} =	yes
if tank is heated, enter temp (°F) =	180
vapor recovery system present? {yes, no} =	yes
is this a wash tank? {yes, no} =	no
will flashing losses occur in this tank? {yes, no} =	no
breather vent pressure setting range (psi) (def = 0.06):	0.06

Attachment:	E
Permit:	ATC XXXX
Date:	01/12/16
Tank:	T-7180
Name:	Skim Oil
Filename:	...\xxxx.xls
Distrcit:	Santa Barbara
Version:	Tank-2b.xls

Tank Data		
diameter (feet) =		21.5
capacity (enter barrels in first col, gals will compute) =	1,000	42,000
conical or dome roof? {c, d} =		c
shell height (feet) =		16
roof height (def = 1):		1
ave liq height (feet):		8
color {1:Spec Al, 2:Diff Al, 3:Lite, 4:Med, 5:Rd, 6:Wh} =		4
condition {1: Good, 2: Poor} =		1
upstream pressure (psig) (def = 0 when no flashing occurs):		0

Liquid Data	A	B
maximum daily throughput (bopd) =		2,922
Ann thruput (gal): (enter value in Column A if not max P	3.806E+07	3.806E+07
RVP (psia):		0.09788
°API gravity =		9

Paint Factor Matrix	paint condition	
paint color	good	poor
spec alum	0.39	0.49
diff alum	0.60	0.68
lite grey	0.54	0.63
med grey	0.68	0.74
red	0.89	0.91
white	0.17	0.34

Molecular Weight Matrix	
liquid	mol wt
gas rvp 13	62
gas rvp 10	66
gas rvp 7	68
crude oil	50
JP -4	80
jet kerosene	130
fuel oil 2	130
fuel oil 6	190

Computed Values		
roof outage [1] (feet):		0.3
vapor space volume [2] (cubic feet):		3,013
turnovers [3] :		906.3
turnover factor [4] :		0.2
paint factor [5] :		0.68
surface temperatures (°R, °F)		
average [6] :	640	180
maximum [7] :	641.25	181.25
minimum [8] :	638.75	178.75
product factor [9] :		0.75
diurnal vapor ranges		
temperature [10] (fahrenheit degrees):		5
vapor pressure [11] (psia):		0.030783
molecular weight [12] (lb/lb-mol):		50
TVP [13] (psia) [adjusted for ave liquid surface temp]:		0.5
vapor density [14] (lb/cubic foot):		0.00364
vapor expansion factor [15] :		0.006
vapor saturation factor [16] :		0.819706
vented vapor volume (scf/bbl):		8
fraction ROG - flashing losses:		0.308
fraction ROG - evaporative losses:		0.885

Adjusted TVP Matrix	
liquid	TVP value
gas rvp 13	23.7
gas rvp 10	11.2
gas rvp 7	10.7
crude oil	0.5
JP -4	4.9
jet kerosene	0.0385
fuel oil 2	0.0422
fuel oil 6	0.00016

RVP Matrix	
liquid	RVP value
gas rvp 13	13
gas rvp 10	10
gas rvp 7	7
crude oil	0.09788
JP -4	2.7
jet kerosene	0.029
fuel oil 2	0.022
fuel oil 6	0.00019

Long-Term VRU_Eff = 95.00%

Short-Term VRU_Eff = 95.00%

Emissions	Uncontrolled ROC emissions			Controlled ROC emissions		
	lb/hr	lb/day	ton/year	lb/hr	lb/day	ton/year
breathing loss [17] =	0.00	0.05	0.01	0.00	0.00	0.00
working loss [18] =	0.34	8.24	1.50	0.02	0.41	0.08
flashing loss [19] =	0.00	0.00	0.00	0.00	0.00	0.00
TOTALS =	**0.35**	**8.29**	**1.51**	**0.02**	**0.41**	**0.08**

NOTES: see attachment for explanation of notes (1 through 19)

FIXED ROOF TANK CALCULATION (AP-42: Chapter 7 Method)

Basic Input Data	
liquid {1:G13, 2:G10, 3:G7, 4:C, 5:JP, 6:ker, 7:O2, 8:O6} =	4
liquid TVP =	0.5
if TVP is entered, enter TVP temperature (°F) =	180
tank heated {yes, no} =	yes
if tank is heated, enter temp (°F) =	180
vapor recovery system present? {yes, no} =	yes
is this a wash tank? {yes, no} =	no
will flashing losses occur in this tank? {yes, no} =	no
breather vent pressure setting range (psi) (def = 0.06):	0.06

Attachment:	E
Permit:	ATC XXXX
Date:	01/12/16
Tank:	T-7140
Name:	Oily Sludge
Filename:	...\xxxx.xls
Distrcit:	Santa Barbara
Version:	Tank-2b.xls

Tank Data		
diameter (feet) =		21.5
capacity (enter barrels in first col, gals will compute) =	1,000	42,000
conical or dome roof? {c, d} =		c
shell height (feet) =		16
roof height (def = 1):		7
ave liq height (feet):		8
color {1:Spec Al, 2:Diff Al, 3:Lite, 4:Med, 5:Rd, 6:Wh} =		4
condition {1: Good, 2: Poor} =		1
upstream pressure (psig) (def = 0 when no flashing occurs):		0

Liquid Data	A	B
maximum daily throughput (bopd) =		803
Ann thruput (gal): (enter value in Column A if not max P	9.828E+06	9.828E+06
RVP (psia):		0.09788
°API gravity =		9

Paint Factor Matrix		
	paint condition	
paint color	good	poor
spec alum	0.39	0.49
diff alum	0.60	0.68
lite grey	0.54	0.63
med grey	0.68	0.74
red	0.89	0.91
white	0.17	0.34

Molecular Weight Matrix	
liquid	mol wt
gas rvp 13	62
gas rvp 10	66
gas rvp 7	68
crude oil	50
JP -4	80
jet kerosene	130
fuel oil 2	130
fuel oil 6	190

Computed Values		
roof outage [1] (feet):		2.3
vapor space volume [2] (cubic feet):		3,739
turnovers [3] :		234
turnover factor [4] :		0.29
paint factor [5] :		0.68
surface temperatures (°R, °F)		
average [6] :	640	180
maximum [7] :	641.25	181.25
minimum [8] :	638.75	178.75
product factor [9] :		0.75
diurnal vapor ranges		
temperature [10] (fahrenheit degrees):		5
vapor pressure [11] (psia):		0.030783
molecular weight [12] (lb/lb-mol):		50
TVP [13] (psia) [adjusted for ave liquid surface temp]:		0.5
vapor density [14] (lb/cubic foot):		0.00364
vapor expansion factor [15] :		0.006
vapor saturation factor [16] :		0.785577
vented vapor volume (scf/bbl):		8
fraction ROG - flashing losses:		0.308
fraction ROG - evaporative losses:		0.885

Adjusted TVP Matrix	
liquid	TVP value
gas rvp 13	23.7
gas rvp 10	11.2
gas rvp 7	10.7
crude oil	0.5
JP -4	4.9
jet kerosene	0.0385
fuel oil 2	0.0422
fuel oil 6	0.00016

RVP Matrix	
liquid	RVP value
gas rvp 13	13
gas rvp 10	10
gas rvp 7	7
crude oil	0.09788
JP -4	2.7
jet kerosene	0.029
fuel oil 2	0.022
fuel oil 6	0.00019

Long-Term VRU_Eff = 95.00%

Short-Term VRU_Eff = 95.00%

Emissions	Uncontrolled ROC emissions			Controlled ROC emissions		
	lb/hr	lb/day	ton/year	lb/hr	lb/day	ton/year
breathing loss [17] =	0.00	0.06	0.01	0.00	0.00	0.00
working loss [18] =	0.13	3.09	0.56	0.01	0.15	0.03
flashing loss [19] =	0.00	0.00	0.00	0.00	0.00	0.00
TOTALS =	**0.13**	**3.14**	**0.57**	**0.01**	**0.16**	**0.03**

NOTES: see attachment for explanation of notes (1 through 19)

FIXED ROOF TANK CALCULATION (AP-42: Chapter 7 Method)

Basic Input Data	
liquid {1:G13, 2:G10, 3:G7, 4:C, 5:JP, 6:ker, 7:O2, 8:O6} =	4
liquid TVP =	0.5
if TVP is entered, enter TVP temperature (°F) =	180
tank heated {yes, no} =	yes
if tank is heated, enter temp (°F) =	180
vapor recovery system present? {yes, no} =	yes
is this a wash tank? {yes, no} =	no
will flashing losses occur in this tank? {yes, no} =	no
breather vent pressure setting range (psi) (def = 0.06):	0.06

Attachment:	E
Permit:	ATC XXXX
Date:	01/12/16
Tank:	T-7070
Name:	Skim Oil
Filename:	...\xxxx.xls
Distrcit:	Santa Barbara
Version:	Tank-2b.xls

Tank Data		
diameter (feet) =		21.5
capacity (enter barrels in first col, gals will compute) =	1,000	42,000
conical or dome roof? {c, d} =		c
shell height (feet) =		16
roof height (def = 1):		1
ave liq height (feet):		8
color {1:Spec Al, 2:Diff Al, 3:Lite, 4:Med, 5:Rd, 6:Wh} =		4
condition {1: Good, 2: Poor} =		1
upstream pressure (psig) (def = 0 when no flashing occurs):		0

Liquid Data	A	B
maximum daily throughput (bopd) =		2,922
Ann thruput (gal): (enter value in Column A if not max P	3.806E+07	3.806E+07
RVP (psia):		0.09788
°API gravity =		9

Paint Factor Matrix		
	paint condition	
paint color	good	poor
spec alum	0.39	0.49
diff alum	0.60	0.68
lite grey	0.54	0.63
med grey	0.68	0.74
red	0.89	0.91
white	0.17	0.34

Molecular Weight Matrix	
liquid	mol wt
gas rvp 13	62
gas rvp 10	66
gas rvp 7	68
crude oil	50
JP -4	80
jet kerosene	130
fuel oil 2	130
fuel oil 6	190

Computed Values		
roof outage [1] (feet):		0.3
vapor space volume [2] (cubic feet):		3,013
turnovers [3] :		906.3
turnover factor [4] :		0.2
paint factor [5] :		0.68
surface temperatures (°R, °F)		
average [6] :	640	180
maximum [7] :	641.25	181.25
minimum [8] :	638.75	178.75
product factor [9] :		0.75
diurnal vapor ranges		
temperature [10] (fahrenheit degrees):		5
vapor pressure [11] (psia):		0.030783
molecular weight [12] (lb/lb-mol):		50
TVP [13] (psia) [adjusted for ave liquid surface temp]:		0.5
vapor density [14] (lb/cubic foot):		0.00364
vapor expansion factor [15] :		0.006
vapor saturation factor [16] :		0.819706
vented vapor volume (scf/bbl):		8
fraction ROG - flashing losses:		0.308
fraction ROG - evaporative losses:		0.885

Adjusted TVP Matrix	
liquid	TVP value
gas rvp 13	23.7
gas rvp 10	11.2
gas rvp 7	10.7
crude oil	0.5
JP -4	4.9
jet kerosene	0.0385
fuel oil 2	0.0422
fuel oil 6	0.00016

RVP Matrix	
liquid	RVP value
gas rvp 13	13
gas rvp 10	10
gas rvp 7	7
crude oil	0.09788
JP -4	2.7
jet kerosene	0.029
fuel oil 2	0.022
fuel oil 6	0.00019

Long-Term VRU_Eff =	95.00%
Short-Term VRU_Eff =	95.00%

Emissions	Uncontrolled ROC emissions			Controlled ROC emissions		
	lb/hr	lb/day	ton/year	lb/hr	lb/day	ton/year
breathing loss [17] =	0.00	0.05	0.01	0.00	0.00	0.00
working loss [18] =	0.34	8.24	1.50	0.02	0.41	0.08
flashing loss [19] =	0.00	0.00	0.00	0.00	0.00	0.00
TOTALS =	**0.35**	**8.29**	**1.51**	**0.02**	**0.41**	**0.08**

NOTES: see attachment for explanation of notes (1 through 19)

FIXED ROOF TANK CALCULATION (AP-42: Chapter 7 Method)

Basic Input Data	
liquid {1:G13, 2:G10, 3:G7, 4:C, 5:JP, 6:ker, 7:O2, 8:O6} =	4
liquid TVP =	0.5
if TVP is entered, enter TVP temperature (°F) =	180
tank heated {yes, no} =	yes
if tank is heated, enter temp (°F) =	180
vapor recovery system present? {yes, no} =	yes
is this a wash tank? {yes, no} =	no
will flashing losses occur in this tank? {yes, no} =	no
breather vent pressure setting range (psi) (def = 0.06):	0.06

Attachment:	E
Permit:	ATC XXXX
Date:	01/12/16
Tank:	T-7030
Name:	Oily Sludge
Filename:	...\xxxx.xls
Distrcit:	Santa Barbara
Version:	Tank-2b.xls

Tank Data		
diameter (feet) =		21.5
capacity (enter barrels in first col, gals will compute) =	1,000	42,000
conical or dome roof? {c, d} =		c
shell height (feet) =		16
roof height (def = 1):		7
ave liq height (feet):		8
color {1:Spec Al, 2:Diff Al, 3:Lite, 4:Med, 5:Rd, 6:Wh} =		4
condition {1: Good, 2: Poor} =		1
upstream pressure (psig) (def = 0 when no flashing occurs):		0

Liquid Data	A	B
maximum daily throughput (bopd) =		803
Ann thruput (gal): (enter value in Column A if not max P	9.828E+06	9.828E+06
RVP (psia):		0.09788
°API gravity =		9

Paint Factor Matrix		
	paint condition	
paint color	good	poor
spec alum	0.39	0.49
diff alum	0.60	0.68
lite grey	0.54	0.63
med grey	0.68	0.74
red	0.89	0.91
white	0.17	0.34

Molecular Weight Matrix	
liquid	mol wt
gas rvp 13	62
gas rvp 10	66
gas rvp 7	68
crude oil	50
JP -4	80
jet kerosene	130
fuel oil 2	130
fuel oil 6	190

Computed Values		
roof outage [1] (feet):		2.3
vapor space volume [2] (cubic feet):		3,739
turnovers [3] :		234
turnover factor [4] :		0.29
paint factor [5] :		0.68
surface temperatures (°R, °F)		
average [6] :	640	180
maximum [7] :	641.25	181.25
minimum [8] :	638.75	178.75
product factor [9] :		0.75
diurnal vapor ranges		
temperature [10] (fahrenheit degrees):		5
vapor pressure [11] (psia):		0.030783
molecular weight [12] (lb/lb-mol):		50
TVP [13] (psia) [adjusted for ave liquid surface temp]:		0.5
vapor density [14] (lb/cubic foot):		0.00364
vapor expansion factor [15] :		0.006
vapor saturation factor [16] :		0.785577
vented vapor volume (scf/bbl):		8
fraction ROG - flashing losses:		0.308
fraction ROG - evaporative losses:		0.885

Adjusted TVP Matrix	
liquid	TVP value
gas rvp 13	23.7
gas rvp 10	11.2
gas rvp 7	10.7
crude oil	0.5
JP -4	4.9
jet kerosene	0.0385
fuel oil 2	0.0422
fuel oil 6	0.00016

RVP Matrix	
liquid	RVP value
gas rvp 13	13
gas rvp 10	10
gas rvp 7	7
crude oil	0.09788
JP -4	2.7
jet kerosene	0.029
fuel oil 2	0.022
fuel oil 6	0.00019

Long-Term VRU_Eff = 95.00%

Short-Term VRU_Eff = 95.00%

Emissions	Uncontrolled ROC emissions			Controlled ROC emissions		
	lb/hr	lb/day	ton/year	lb/hr	lb/day	ton/year
breathing loss [17] =	0.00	0.06	0.01	0.00	0.00	0.00
working loss [18] =	0.13	3.09	0.56	0.01	0.15	0.03
flashing loss [19] =	0.00	0.00	0.00	0.00	0.00	0.00
TOTALS =	**0.13**	**3.14**	**0.57**	**0.01**	**0.16**	**0.03**

NOTES: see attachment for explanation of notes (1 through 19)

FIXED ROOF TANK CALCULATION (AP-42: Chapter 7 Method)

Basic Input Data	
liquid {1:G13, 2:G10, 3:G7, 4:C, 5:JP, 6:ker, 7:O2, 8:O6} =	4
liquid TVP =	0.5
if TVP is entered, enter TVP temperature (°F) =	200
tank heated {yes, no} =	yes
if tank is heated, enter temp (°F) =	200
vapor recovery system present? {yes, no} =	yes
is this a wash tank? {yes, no} =	no
will flashing losses occur in this tank? {yes, no} =	no
breather vent pressure setting range (psi) (def = 0.06):	0.06

Attachment:	E
Permit:	ATC XXXX
Date:	01/12/16
Tank:	T-2180
Name:	HCO Storage
Filename:	...\xxxx.xls
Distrcit:	Santa Barbara
Version:	Tank-2b.xls

Tank Data		
diameter (feet) =		55
capacity (enter barrels in first col, gals will compute) =	10,000	420,000
conical or dome roof? {c, d} =		c
shell height (feet) =		24
roof height (def = 1):		1
ave liq height (feet):		12
color {1:Spec Al, 2:Diff Al, 3:Lite, 4:Med, 5:Rd, 6:Wh} =		4
condition {1: Good, 2: Poor} =		1
upstream pressure (psig) (def = 0 when no flashing occurs):		0

Liquid Data	A	B
maximum daily throughput (bopd) =		10,140
Ann thruput (gal): (enter value in Column A if not max P	1.244E+08	1.244E+08
RVP (psia):		0.05672
°API gravity =		12

Paint Factor Matrix		
	paint condition	
paint color	good	poor
spec alum	0.39	0.49
diff alum	0.60	0.68
lite grey	0.54	0.63
med grey	0.68	0.74
red	0.89	0.91
white	0.17	0.34

Molecular Weight Matrix	
liquid	mol wt
gas rvp 13	62
gas rvp 10	66
gas rvp 7	68
crude oil	50
JP -4	80
jet kerosene	130
fuel oil 2	130
fuel oil 6	190

Computed Values		
roof outage [1] (feet):		0.3
vapor space volume [2] (cubic feet):		29,223
turnovers [3] :		296.1
turnover factor [4] :		0.27
paint factor [5] :		0.68
surface temperatures (°R, °F)		
average [6] :	660	200
maximum [7] :	661.25	201.25
minimum [8] :	658.75	198.75
product factor [9] :		0.75
diurnal vapor ranges		
temperature [10] (fahrenheit degrees):		5
vapor pressure [11] (psia):		0.030851
molecular weight [12] (lb/lb-mol):		50
TVP [13] (psia) [adjusted for ave liquid surface temp]:		0.50003
vapor density [14] (lb/cubic foot):		0.00353
vapor expansion factor [15] :		0.006
vapor saturation factor [16] :		0.754165
vented vapor volume (scf/bbl):		8
fraction ROG - flashing losses:		0.308
fraction ROG - evaporative losses:		0.885

Adjusted TVP Matrix	
liquid	TVP value
gas rvp 13	26.5
gas rvp 10	12.2
gas rvp 7	11.9
crude oil	0.50003
JP -4	5.5
jet kerosene	0.0435
fuel oil 2	0.048
fuel oil 6	0.00018

RVP Matrix	
liquid	RVP value
gas rvp 13	13
gas rvp 10	10
gas rvp 7	7
crude oil	0.056716
JP -4	2.7
jet kerosene	0.029
fuel oil 2	0.022
fuel oil 6	0.00019

Long-Term VRU_Eff =	95.00%
Short-Term VRU_Eff =	95.00%

Emissions	Uncontrolled ROC emissions			Controlled ROC emissions		
	lb/hr	lb/day	ton/year	lb/hr	lb/day	ton/year
breathing loss [17] =	0.02	0.41	0.08	0.00	0.02	0.00
working loss [18] =	1.51	36.35	6.63	0.08	1.82	0.33
flashing loss [19] =	0.00	0.00	0.00	0.00	0.00	0.00
TOTALS =	**1.53**	**36.76**	**6.71**	**0.08**	**1.84**	**0.34**

NOTES: see attachment for explanation of notes (1 through 19)

FIXED ROOF TANK CALCULATION (AP-42: Chapter 7 Method)

Basic Input Data	
liquid {1:G13, 2:G10, 3:G7, 4:C, 5:JP, 6:ker, 7:O2, 8:O6} =	4
liquid TVP =	0.5
if TVP is entered, enter TVP temperature (°F) =	200
tank heated {yes, no} =	yes
if tank is heated, enter temp (°F) =	200
vapor recovery system present? {yes, no} =	yes
is this a wash tank? {yes, no} =	no
will flashing losses occur in this tank? {yes, no} =	no
breather vent pressure setting range (psi) (def = 0.06):	0.06

Attachment:	E
Permit:	ATC XXXX
Date:	01/12/16
Tank:	T-2170
Name:	HCO Storage
Filename:	...\xxxx.xls
Distrcit:	Santa Barbara
Version:	Tank-2b.xls

Tank Data		
diameter (feet) =		55
capacity (enter barrels in first col, gals will compute) =	10,000	420,000
conical or dome roof? {c, d} =		c
shell height (feet) =		24
roof height (def = 1):		1
ave liq height (feet):		12
color {1:Spec Al, 2:Diff Al, 3:Lite, 4:Med, 5:Rd, 6:Wh} =		4
condition {1: Good, 2: Poor} =		1
upstream pressure (psig) (def = 0 when no flashing occurs):		0

Liquid Data	A	B
maximum daily throughput (bopd) =		10,140
Ann thruput (gal): (enter value in Column A if not max P	1.244E+08	1.244E+08
RVP (psia):		0.05672
°API gravity =		12

Paint Factor Matrix		
	paint condition	
paint color	good	poor
spec alum	0.39	0.49
diff alum	0.60	0.68
lite grey	0.54	0.63
med grey	0.68	0.74
red	0.89	0.91
white	0.17	0.34

Molecular Weight Matrix	
liquid	mol wt
gas rvp 13	62
gas rvp 10	66
gas rvp 7	68
crude oil	50
JP -4	80
jet kerosene	130
fuel oil 2	130
fuel oil 6	190

Computed Values		
roof outage [1] (feet):		0.3
vapor space volume [2] (cubic feet):		29,223
turnovers [3] :		296.1
turnover factor [4] :		0.27
paint factor [5] :		0.68
surface temperatures (°R, °F)		
average [6] :	660	200
maximum [7] :	661.25	201.25
minimum [8] :	658.75	198.75
product factor [9] :		0.75
diurnal vapor ranges		
temperature [10] (fahrenheit degrees):		5
vapor pressure [11] (psia):		0.030851
molecular weight [12] (lb/lb-mol):		50
TVP [13] (psia) [adjusted for ave liquid surface temp]:		0.50003
vapor density [14] (lb/cubic foot):		0.00353
vapor expansion factor [15] :		0.006
vapor saturation factor [16] :		0.754165
vented vapor volume (scf/bbl):		8
fraction ROG - flashing losses:		0.308
fraction ROG - evaporative losses:		0.885

Adjusted TVP Matrix	
liquid	TVP value
gas rvp 13	26.5
gas rvp 10	12.2
gas rvp 7	11.9
crude oil	0.50003
JP -4	5.5
jet kerosene	0.0435
fuel oil 2	0.048
fuel oil 6	0.00018

RVP Matrix	
liquid	RVP value
gas rvp 13	13
gas rvp 10	10
gas rvp 7	7
crude oil	0.056716
JP -4	2.7
jet kerosene	0.029
fuel oil 2	0.022
fuel oil 6	0.00019

Long-Term VRU_Eff =	95.00%
Short-Term VRU_Eff =	95.00%

Emissions	Uncontrolled ROC emissions			Controlled ROC emissions		
	lb/hr	lb/day	ton/year	lb/hr	lb/day	ton/year
breathing loss [17] =	0.02	0.41	0.08	0.00	0.02	0.00
working loss [18] =	1.51	36.35	6.63	0.08	1.82	0.33
flashing loss [19] =	0.00	0.00	0.00	0.00	0.00	0.00
TOTALS =	**1.53**	**36.76**	**6.71**	**0.08**	**1.84**	**0.34**

NOTES: see attachment for explanation of notes (1 through 19)

FIXED ROOF TANK CALCULATION (AP-42: Chapter 7 Method)

Attachment:	E
Permit:	ATC XXXX
Date:	01/12/16
Tank:	T-2050
Name:	LCO Storage
Filename:	...\xxxx.xls
Distrcit:	Santa Barbara
Version:	Tank-2b.xls

Basic Input Data	
liquid {1:G13, 2:G10, 3:G7, 4:C, 5:JP, 6:ker, 7:O2, 8:O6} =	4
liquid TVP =	1.57
if TVP is entered, enter TVP temperature (°F) =	60
tank heated {yes, no} =	no
if tank is heated, enter temp (°F) =	
vapor recovery system present? {yes, no} =	yes
is this a wash tank? {yes, no} =	no
will flashing losses occur in this tank? {yes, no} =	no
breather vent pressure setting range (psi) (def = 0.06):	0.06

Tank Data		
diameter (feet) =		44
capacity (enter barrels in first col, gals will compute) =	6,500	273,000
conical or dome roof? {c, d} =		c
shell height (feet) =		24
roof height (def = 1):		1
ave liq height (feet):		12
color {1:Spec Al, 2:Diff Al, 3:Lite, 4:Med, 5:Rd, 6:Wh} =		4
condition {1: Good, 2: Poor} =		1
upstream pressure (psig) (def = 0 when no flashing occurs):		0

Liquid Data	A	B
maximum daily throughput (bopd) =		3,000
Ann thruput (gal): (enter value in Column A if not max P	3.062E+07	3.062E+07
RVP (psia):		3.19896
°API gravity =		29

Computed Values		
roof outage [1] (feet):		0.3
vapor space volume [2] (cubic feet):		18,703
turnovers [3] :		112.15
turnover factor [4] :		0.43
paint factor [5] :		0.68
surface temperatures (°R, °F)		
average [6] :	527.2	67.2
maximum [7] :	539	79
minimum [8] :	515.4	55.4
product factor [9] :		0.75
diurnal vapor ranges		
temperature [10] (fahrenheit degrees):		47.2
vapor pressure [11] (psia):		0.908836
molecular weight [12] (lb/lb-mol):		50
TVP [13] (psia) [adjusted for ave liquid surface temp]:		1.83059
vapor density [14] (lb/cubic foot):		0.016179
vapor expansion factor [15] :		0.155
vapor saturation factor [16] :		0.455921
vented vapor volume (scf/bbl):		100
fraction ROG - flashing losses:		0.308
fraction ROG - evaporative losses:		0.885

Paint Factor Matrix

paint color	paint condition good	paint condition poor
spec alum	0.39	0.49
diff alum	0.60	0.68
lite grey	0.54	0.63
med grey	0.68	0.74
red	0.89	0.91
white	0.17	0.34

Molecular Weight Matrix

liquid	mol wt
gas rvp 13	62
gas rvp 10	66
gas rvp 7	68
crude oil	50
JP -4	80
jet kerosene	130
fuel oil 2	130
fuel oil 6	190

Adjusted TVP Matrix

liquid	TVP value
gas rvp 13	7.908
gas rvp 10	5.56
gas rvp 7	3.932
crude oil	1.83059
JP -4	1.516
jet kerosene	0.0103
fuel oil 2	0.009488
fuel oil 6	0.0000472

RVP Matrix

liquid	RVP value
gas rvp 13	13
gas rvp 10	10
gas rvp 7	7
crude oil	3.198957
JP -4	2.7
jet kerosene	0.029
fuel oil 2	0.022
fuel oil 6	0.00019

Long-Term VRU_Eff =	95.00%
Short-Term VRU_Eff =	95.00%

Emissions	**Uncontrolled ROC emissions**			**Controlled ROC emissions**		
	lb/hr	lb/day	ton/year	lb/hr	lb/day	ton/year
breathing loss [17] =	0.79	18.92	3.45	0.04	0.95	0.17
working loss [18] =	2.17	52.18	9.52	0.11	2.61	0.48
flashing loss [19] =	0.00	0.00	0.00	0.00	0.00	0.00
TOTALS =	**2.96**	**71.10**	**12.98**	**0.15**	**3.56**	**0.65**

NOTES: see attachment for explanation of notes (1 through 19)

FIXED ROOF TANK CALCULATION (AP-42: Chapter 7 Method)

Basic Input Data	
liquid {1:G13, 2:G10, 3:G7, 4:C, 5:JP, 6:ker, 7:O2, 8:O6} =	4
liquid TVP =	1.57
if TVP is entered, enter TVP temperature (°F) =	60
tank heated {yes, no} =	no
if tank is heated, enter temp (°F) =	
vapor recovery system present? {yes, no} =	yes
is this a wash tank? {yes, no} =	no
will flashing losses occur in this tank? {yes, no} =	no
breather vent pressure setting range (psi) (def = 0.06):	0.06

Attachment:	E
Permit:	ATC XXXX
Date:	01/12/16
Tank:	T-2040
Name:	LCO Storage
Filename:	...\xxxx.xls
Distrcit:	Santa Barbara
Version:	Tank-2b.xls

Tank Data		
diameter (feet) =		44
capacity (enter barrels in first col, gals will compute) =	6,500	273,000
conical or dome roof? {c, d} =		c
shell height (feet) =		24
roof height (def = 1):		1
ave liq height (feet):		12
color {1:Spec Al, 2:Diff Al, 3:Lite, 4:Med, 5:Rd, 6:Wh} =		4
condition {1: Good, 2: Poor} =		1
upstream pressure (psig) (def = 0 when no flashing occurs):		0

Liquid Data	A	B
maximum daily throughput (bopd) =		3,000
Ann thruput (gal): (enter value in Column A if not max P	3.062E+07	3.062E+07
RVP (psia):		3.19896
°API gravity =		29

Paint Factor Matrix		
	paint condition	
paint color	good	poor
spec alum	0.39	0.49
diff alum	0.60	0.68
lite grey	0.54	0.63
med grey	0.68	0.74
red	0.89	0.91
white	0.17	0.34

Molecular Weight Matrix	
liquid	mol wt
gas rvp 13	62
gas rvp 10	66
gas rvp 7	68
crude oil	50
JP -4	80
jet kerosene	130
fuel oil 2	130
fuel oil 6	190

Computed Values		
roof outage [1] (feet):		0.3
vapor space volume [2] (cubic feet):		18,703
turnovers [3] :		112.15
turnover factor [4] :		0.43
paint factor [5] :		0.68
surface temperatures (°R, °F)		
average [6] :	527.2	67.2
maximum [7] :	539	79
minimum [8] :	515.4	55.4
product factor [9] :		0.75
diurnal vapor ranges		
temperature [10] (fahrenheit degrees):		47.2
vapor pressure [11] (psia):		0.908836
molecular weight [12] (lb/lb-mol):		50
TVP [13] (psia) [adjusted for ave liquid surface temp]:		1.83059
vapor density [14] (lb/cubic foot):		0.016179
vapor expansion factor [15] :		0.155
vapor saturation factor [16] :		0.455921
vented vapor volume (scf/bbl):		8
fraction ROG - flashing losses:		0.308
fraction ROG - evaporative losses:		0.885

Adjusted TVP Matrix	
liquid	TVP value
gas rvp 13	7.908
gas rvp 10	5.56
gas rvp 7	3.932
crude oil	1.83059
JP -4	1.516
jet kerosene	0.0103
fuel oil 2	0.009488
fuel oil 6	0.0000472

RVP Matrix	
liquid	RVP value
gas rvp 13	13
gas rvp 10	10
gas rvp 7	7
crude oil	3.198957
JP -4	2.7
jet kerosene	0.029
fuel oil 2	0.022
fuel oil 6	0.00019

Long-Term VRU_Eff =	95.00%
Short-Term VRU_Eff =	95.00%

Emissions	Uncontrolled ROC emissions			Controlled ROC emissions		
	lb/hr	lb/day	ton/year	lb/hr	lb/day	ton/year
breathing loss [17] =	0.79	18.92	3.45	0.04	0.95	0.17
working loss [18] =	2.17	52.18	9.52	0.11	2.61	0.48
flashing loss [19] =	0.00	0.00	0.00	0.00	0.00	0.00
TOTALS =	**2.96**	**71.10**	**12.98**	**0.15**	**3.56**	**0.65**

NOTES: see attachment for explanation of notes (1 through 19)

Electrical Generation Greenhouse Gas Emissions

- Operating Indirect Electrical Generation Emissions

Operating Indirect Electrical Generation Emissions

Process	Emission Factor (lbs/MWh)	Peak Year (MWh/day)	Peak Year (MWh/year)	Emissions (lbs/year)	GWP	CO2e (lbs/Year)	CO2e (MT/Year)
Indirect Electrical Generation N2O	0.006	288	105120	631	310	195523	88.7
Indirect Electrical Generation CH4	0.029	288	105120	3048	21	64018	29.0
Indirect Electrical Generation CO2	641.35	288	105120	67418712	1	67418712	30580.6
						Total:	**30,698.3**

1) Emission Factors Obtained from CalEEMod for PG&E for Santa Barbara County.
2) Estimated 12 MW substation.

Emission Summaries

- Construction Emissions Summaries
- Operational Emissions Summaries

AERA - Santa Barbara County - Cat Canyon - ECC Project

Construction Emission Summary
Unmitigated

	Emissions (tons/year)						Emissions (MT/year)			
Year	ROC	CO	NOx	SOx	PM10	PM2.5	N2O	CH4	CO2	CO2e
Project Construction Activities										
2017	1.89	9.64	23.78	0.02	3.02	1.09	0.01	0.67	2,229.42	2,246.65
2018	3.85	21.71	37.78	0.04	18.95	3.32	0.09	1.29	4,435.47	4,489.95
2019	5.47	32.26	50.06	0.06	30.84	5.11	0.15	1.71	5,973.58	6,055.54
2020	0.75	4.35	8.12	0.01	2.37	0.52	0.01	0.29	923.46	932.80
2021	0.66	4.12	7.06	0.01	2.22	0.47	0.01	0.27	870.36	879.19
2022	0.28	1.64	3.10	0.01	0.81	0.18	0.00	0.15	458.40	462.62
2023	1.12	8.82	9.49	0.02	10.56	1.40	0.05	0.50	1,755.47	1,782.39
2024	3.42	25.37	31.65	0.06	15.91	2.69	0.07	1.74	5,749.59	5,809.29
2025	0.01	0.06	0.10	0.00	0.13	0.02	0.00	0.01	18.95	19.28
2026	0.26	2.06	2.36	0.01	0.75	0.16	0.00	0.14	464.27	468.34
2027	0.00	0.00	0.00	0.00	0.00	0.00	0.00	0.00	0.00	0.00
2028	0.22	1.50	2.13	0.00	0.71	0.14	0.00	0.14	446.28	450.33
2029	0.11	0.79	1.01	0.00	0.40	0.07	0.00	0.05	175.33	177.00
2030	0.27	2.16	1.07	0.01	1.08	0.14	0.01	0.03	608.21	610.48
2031	0.36	2.59	1.43	0.01	1.26	0.17	0.01	0.04	805.94	808.61
2032	0.11	0.98	0.45	0.00	0.33	0.04	0.00	0.01	231.76	232.49
2033	0.00	0.02	0.01	0.00	0.06	0.01	0.00	0.00	10.57	10.68
2034	0.23	1.51	0.93	0.01	0.43	0.07	0.00	0.02	502.03	503.11
2035	0.71	5.86	2.23	0.02	3.13	0.38	0.02	0.07	1,799.36	1,805.79
2036	0.00	0.02	0.01	0.00	0.06	0.01	0.00	0.00	10.54	10.65
2037	0.00	0.02	0.01	0.00	0.06	0.01	0.00	0.00	10.53	10.65
14-Mile Fuel Line Construction Activities										
2018	3.46	24.44	36.67	0.04	7.81	2.28	0.03	1.14	4,006.06	4,049.89
115KV Interconnect and Substation Construction Activities										
2017	0.13	0.76	1.09	0.00	0.55	0.11	0.00	0.03	105.40	106.81

AERA - Santa Barbara County - Cat Canyon - ECC Project

Drilling and Hookup Construction Activities										
2017	0.00	0.00	0.00	0.00	0.00	0.00	0.00	0.00	0.00	0.00
2018	0.23	1.20	2.57	0.00	1.08	0.18	0.01	0.04	535.79	538.28
2019	3.40	18.48	36.25	0.08	7.37	1.72	0.03	0.59	8,355.95	8,378.02
2020	0.00	0.00	0.00	0.00	0.00	0.00	0.00	0.00	0.00	0.00
2021	0.07	0.44	0.08	0.00	0.52	0.07	0.00	0.02	200.81	201.93
2022	0.07	0.46	0.62	0.00	0.51	0.07	0.00	0.02	213.76	214.90
2023	0.07	0.45	0.55	0.00	0.51	0.07	0.00	0.02	213.37	214.51
2024	2.71	18.32	20.58	0.08	6.92	1.26	0.03	0.56	8,813.83	8,835.31
2025	0.11	0.83	0.80	0.00	1.03	0.12	0.01	0.03	400.25	402.48
2026	0.44	3.12	3.07	0.01	2.63	0.34	0.01	0.10	1,504.60	1,510.81
2027	0.18	1.25	1.24	0.01	1.04	0.14	0.01	0.04	603.40	605.87
2028	0.15	1.07	1.05	0.00	1.03	0.13	0.01	0.04	514.32	516.68
2029	0.40	2.84	2.82	0.01	2.11	0.29	0.01	0.09	1,373.84	1,379.02
2030	0.52	4.22	2.01	0.02	3.11	0.37	0.02	0.06	2,193.47	2,199.53
2031	0.35	2.87	1.37	0.01	2.09	0.25	0.01	0.04	1,495.63	1,499.71
2032	0.39	3.15	1.50	0.02	2.54	0.30	0.01	0.04	1,637.89	1,642.81
2033	0.13	1.04	0.49	0.01	1.01	0.11	0.01	0.02	538.37	540.29
2034	0.44	3.55	1.69	0.02	2.58	0.30	0.01	0.05	1,846.70	1,851.74
2035	0.88	7.67	2.59	0.04	5.61	0.63	0.03	0.10	4,000.30	4,011.19
2036	0.17	1.44	0.49	0.01	1.04	0.12	0.01	0.02	748.19	750.21
2037	0.17	1.44	0.49	0.01	1.04	0.12	0.01	0.02	748.05	750.07
2038	0.17	1.44	0.49	0.01	1.02	0.12	0.01	0.02	747.69	749.67
2039	0.17	1.43	0.49	0.01	1.00	0.11	0.01	0.02	747.35	749.30
2040	0.16	1.43	0.42	0.01	1.02	0.11	0.01	0.02	747.53	749.51
2041	0.16	1.43	0.42	0.01	1.02	0.11	0.01	0.02	747.47	749.45
2042	0.16	1.43	0.42	0.01	1.04	0.11	0.01	0.02	747.67	749.69
2043	0.16	1.43	0.42	0.01	1.04	0.11	0.01	0.02	747.64	749.65
2044	0.16	1.43	0.42	0.01	1.02	0.11	0.01	0.02	747.36	749.35
2045	0.16	1.43	0.42	0.01	1.02	0.11	0.01	0.02	747.34	749.32
2046	0.16	1.43	0.42	0.01	1.02	0.11	0.01	0.02	747.32	749.31
2047	0.16	1.43	0.42	0.01	1.02	0.11	0.01	0.02	747.31	749.29
2048	0.16	1.43	0.42	0.01	1.04	0.11	0.01	0.02	747.55	749.56
2049	0.16	1.43	0.42	0.01	1.02	0.11	0.01	0.02	747.29	749.27

AERA - Santa Barbara County - Cat Canyon - ECC Project

	Emissions (tons/year)						Emissions (MT/year)			
Year	ROC	CO	NOx	SOx	PM10	PM2.5	N2O	CH4	CO2	CO2e
Total Unmitigated Construction Activities										
2017	2.02	10.39	24.88	0.02	3.56	1.19	0.01	0.70	2,334.82	2,353.46
2018	7.53	47.35	77.02	0.09	27.84	5.78	0.13	2.48	8,977.32	9,078.12
2019	8.88	50.74	86.31	0.14	38.21	6.83	0.18	2.30	14,329.54	14,433.57
2020	0.75	4.35	8.12	0.01	2.37	0.52	0.01	0.29	923.46	932.80
2021	0.73	4.56	7.14	0.01	2.73	0.54	0.01	0.29	1,071.17	1,081.11
2022	0.35	2.09	3.72	0.01	1.32	0.25	0.01	0.16	672.15	677.52
2023	1.19	9.28	10.04	0.02	11.07	1.47	0.06	0.52	1,968.84	1,996.90
2024	6.13	43.69	52.23	0.15	22.83	3.95	0.11	2.30	14,563.42	14,644.60
2025	0.12	0.89	0.91	0.00	1.16	0.14	0.01	0.03	419.20	421.76
2026	0.70	5.18	5.44	0.02	3.38	0.50	0.02	0.25	1,968.87	1,979.15
2027	0.18	1.25	1.24	0.01	1.04	0.14	0.01	0.04	603.40	605.87
2028	0.37	2.57	3.19	0.01	1.73	0.27	0.01	0.19	960.60	967.01
2029	0.51	3.63	3.83	0.02	2.51	0.36	0.01	0.14	1,549.17	1,556.02
2030	0.79	6.38	3.08	0.03	4.19	0.50	0.02	0.08	2,801.68	2,810.02
2031	0.71	5.46	2.80	0.02	3.34	0.42	0.02	0.07	2,301.58	2,308.33
2032	0.49	4.13	1.95	0.02	2.87	0.34	0.01	0.05	1,869.64	1,875.30
2033	0.13	1.06	0.51	0.01	1.07	0.12	0.01	0.02	548.94	550.97
2034	0.67	5.05	2.63	0.02	3.01	0.38	0.02	0.07	2,348.73	2,354.85
2035	1.59	13.53	4.81	0.06	8.74	1.01	0.04	0.17	5,799.66	5,816.98
2036	0.17	1.46	0.50	0.01	1.10	0.12	0.01	0.02	758.73	760.86
2037	0.17	1.46	0.49	0.01	1.10	0.12	0.01	0.02	758.58	760.71
2038	0.17	1.44	0.49	0.01	1.02	0.12	0.01	0.02	747.69	749.67
2039	0.17	1.43	0.49	0.01	1.00	0.11	0.01	0.02	747.35	749.30
2040	0.16	1.43	0.42	0.01	1.02	0.11	0.01	0.02	747.53	749.51
2041	0.16	1.43	0.42	0.01	1.02	0.11	0.01	0.02	747.47	749.45
2042	0.16	1.43	0.42	0.01	1.04	0.11	0.01	0.02	747.67	749.69
2043	0.16	1.43	0.42	0.01	1.04	0.11	0.01	0.02	747.64	749.65
2044	0.16	1.43	0.42	0.01	1.02	0.11	0.01	0.02	747.36	749.35
2045	0.16	1.43	0.42	0.01	1.02	0.11	0.01	0.02	747.34	749.32
2046	0.16	1.43	0.42	0.01	1.02	0.11	0.01	0.02	747.32	749.31
2047	0.16	1.43	0.42	0.01	1.02	0.11	0.01	0.02	747.31	749.29
2048	0.16	1.43	0.42	0.01	1.04	0.11	0.01	0.02	747.55	749.56
2049	0.16	1.43	0.42	0.01	1.02	0.11	0.01	0.02	747.29	749.27
Peak	8.88	50.74	86.31	0.15	38.21	6.83	0.18	2.48	14,563.42	14,644.60

AERA - Santa Barbara County - Cat Canyon - ECC Project

Construction Emission Summary
Mitigated

	Emissions (tons/year)						Emissions (MT/year)			
Year	ROC	CO	NOx	SOx	PM10	PM2.5	N2O	CH4	CO2	CO2e
Project Construction Activities										
2017	0.29	11.59	1.30	0.02	0.55	0.09	0.01	0.67	2,229.41	2,246.65
2018	0.63	23.76	6.16	0.04	4.20	0.49	0.09	1.29	4,435.47	4,489.94
2019	0.89	34.33	9.79	0.06	6.93	0.81	0.15	1.71	5,973.58	6,055.54
2020	0.13	5.41	0.82	0.01	0.50	0.07	0.01	0.29	923.46	932.80
2021	0.12	5.20	0.81	0.01	0.47	0.06	0.01	0.27	870.36	879.19
2022	0.06	2.46	0.28	0.01	0.17	0.02	0.00	0.15	458.39	462.62
2023	0.25	10.03	2.64	0.02	2.45	0.27	0.05	0.50	1,755.46	1,782.39
2024	0.82	33.07	6.44	0.06	3.71	0.46	0.07	1.74	5,749.59	5,809.28
2025	0.00	0.09	0.01	0.00	0.03	0.00	0.00	0.01	18.95	19.28
2026	0.07	2.81	0.46	0.01	0.16	0.02	0.00	0.14	464.27	468.34
2027	0.00	0.00	0.00	0.00	0.00	0.00	0.00	0.00	0.00	0.00
2028	0.06	2.40	0.27	0.00	0.16	0.02	0.00	0.14	446.28	450.33
2029	0.03	1.03	0.20	0.00	0.09	0.01	0.00	0.05	175.33	177.00
2030	0.07	3.11	0.52	0.01	0.26	0.03	0.01	0.03	608.21	610.48
2031	0.10	3.94	0.60	0.01	0.31	0.04	0.01	0.04	805.94	808.61
2032	0.03	1.29	0.25	0.00	0.08	0.01	0.00	0.01	231.76	232.49
2033	0.00	0.04	0.01	0.00	0.01	0.00	0.00	0.00	10.57	10.68
2034	0.06	2.38	0.37	0.01	0.10	0.02	0.00	0.02	502.03	503.11
2035	0.22	8.91	1.33	0.02	0.77	0.10	0.02	0.07	1,799.36	1,805.79
2036	0.00	0.04	0.01	0.00	0.01	0.00	0.00	0.00	10.54	10.65
2037	0.00	0.04	0.01	0.00	0.01	0.00	0.00	0.00	10.53	10.65
14-Mile Fuel Line Construction Activities										
2018	0.53	24.90	2.89	0.04	1.50	0.21	0.03	1.14	4,006.06	4,039.89
115KV Interconnect and Substation Construction Activities										
2017	0.02	0.66	0.18	0.00	0.12	0.01	0.00	0.03	105.40	103.81

AERA - Santa Barbara County - Cat Canyon - ECC Project

Drilling and Hookup Construction Activities										
2017	0.00	0.00	0.00	0.00	0.00	0.00	0.00	0.00	0.00	0.00
2018	0.06	2.23	0.33	0.00	0.25	0.03	0.01	0.04	535.79	538.28
2019	0.98	35.62	5.01	0.08	1.62	0.28	0.03	0.59	8,355.94	8,378.02
2020	0.00	0.00	0.00	0.00	0.00	0.00	0.00	0.00	0.00	0.00
2021	0.02	0.85	0.12	0.00	0.12	0.01	0.00	0.02	200.81	201.93
2022	0.02	0.91	0.12	0.00	0.12	0.02	0.00	0.02	213.76	214.90
2023	0.02	0.90	0.11	0.00	0.12	0.02	0.00	0.02	213.37	214.51
2024	1.03	37.70	4.75	0.08	1.64	0.29	0.03	0.56	8,823.82	8,835.30
2025	0.05	1.69	0.21	0.00	0.25	0.03	0.01	0.03	400.25	402.48
2026	0.17	6.39	0.80	0.01	0.63	0.08	0.01	0.10	1,504.60	1,510.81
2027	0.07	2.57	0.32	0.01	0.25	0.03	0.01	0.04	603.40	605.87
2028	0.06	2.18	0.27	0.00	0.25	0.03	0.01	0.04	514.32	516.68
2029	0.16	5.85	0.73	0.01	0.50	0.07	0.01	0.09	1,373.84	1,379.01
2030	0.25	9.13	1.14	0.02	0.76	0.11	0.02	0.06	2,193.47	2,199.53
2031	0.17	6.23	0.78	0.01	0.51	0.07	0.01	0.04	1,495.63	1,499.71
2032	0.19	6.81	0.85	0.02	0.62	0.08	0.01	0.04	1,637.89	1,642.81
2033	0.06	2.23	0.28	0.01	0.25	0.03	0.01	0.02	538.37	540.29
2034	0.21	7.69	0.96	0.02	0.63	0.09	0.01	0.05	1,846.70	1,851.74
2035	0.45	16.67	2.06	0.04	1.38	0.19	0.03	0.10	4,000.29	4,011.18
2036	0.08	3.12	0.39	0.01	0.26	0.04	0.01	0.02	748.19	750.20
2037	0.08	3.12	0.39	0.01	0.26	0.04	0.01	0.02	748.05	750.07
2038	0.08	3.11	0.39	0.01	0.25	0.04	0.01	0.02	747.68	749.67
2039	0.08	3.11	0.39	0.01	0.25	0.03	0.01	0.02	747.34	749.30
2040	0.08	3.11	0.39	0.01	0.25	0.04	0.01	0.02	747.53	749.51
2041	0.08	3.11	0.39	0.01	0.25	0.04	0.01	0.02	747.47	749.45
2042	0.08	3.11	0.39	0.01	0.26	0.04	0.01	0.02	747.67	749.69
2043	0.08	3.11	0.39	0.01	0.26	0.04	0.01	0.02	747.64	749.65
2044	0.08	3.11	0.39	0.01	0.25	0.04	0.01	0.02	747.36	749.34
2045	0.08	3.11	0.39	0.01	0.25	0.04	0.01	0.02	747.34	749.32
2046	0.08	3.11	0.39	0.01	0.25	0.04	0.01	0.02	747.32	749.31
2047	0.08	3.11	0.39	0.01	0.25	0.04	0.01	0.02	747.31	749.29
2048	0.08	3.11	0.39	0.01	0.26	0.04	0.01	0.02	747.54	749.56
2049	0.08	3.11	0.39	0.01	0.25	0.04	0.01	0.02	747.29	749.27

AERA - Santa Barbara County - Cat Canyon - ECC Project

	Emissions (tons/year)						Emissions (MT/year)			
Year	ROC	CO	NOx	SOx	PM10	PM2.5	N2O	CH4	CO2	CO2e
Total Mitigated Construction Activities										
2017	0.30	12.25	1.48	0.02	0.66	0.10	0.01	0.70	2,334.82	2,350.46
2018	1.23	50.89	9.39	0.09	5.95	0.73	0.13	2.48	8,977.31	9,068.11
2019	1.87	69.96	14.80	0.14	8.56	1.09	0.18	2.30	14,329.52	14,433.55
2020	0.13	5.41	0.82	0.01	0.50	0.07	0.01	0.29	923.46	932.80
2021	0.15	6.05	0.93	0.01	0.60	0.08	0.01	0.29	1,071.17	1,081.11
2022	0.09	3.36	0.40	0.01	0.29	0.04	0.01	0.16	672.15	677.52
2023	0.27	10.94	2.75	0.02	2.57	0.28	0.06	0.52	1,968.84	1,996.90
2024	1.85	70.77	11.19	0.15	5.35	0.74	0.11	2.30	14,573.40	14,644.58
2025	0.05	1.78	0.22	0.00	0.28	0.03	0.01	0.03	419.20	421.76
2026	0.24	9.20	1.26	0.02	0.79	0.11	0.02	0.25	1,968.87	1,979.15
2027	0.07	2.57	0.32	0.01	0.25	0.03	0.01	0.04	603.40	605.87
2028	0.12	4.59	0.54	0.01	0.40	0.05	0.01	0.18	960.59	967.01
2029	0.18	6.88	0.93	0.02	0.59	0.08	0.01	0.14	1,549.16	1,556.02
2030	0.32	12.24	1.65	0.03	1.02	0.14	0.02	0.08	2,801.68	2,810.01
2031	0.27	10.17	1.37	0.02	0.82	0.11	0.02	0.07	2,301.57	2,308.32
2032	0.22	8.10	1.10	0.02	0.70	0.10	0.01	0.05	1,869.64	1,875.30
2033	0.06	2.28	0.28	0.01	0.26	0.03	0.01	0.02	548.94	550.97
2034	0.27	10.07	1.33	0.02	0.74	0.11	0.02	0.07	2,348.72	2,354.85
2035	0.67	25.57	3.39	0.06	2.15	0.29	0.04	0.17	5,799.65	5,816.97
2036	0.09	3.16	0.39	0.01	0.27	0.04	0.01	0.02	758.72	760.86
2037	0.09	3.16	0.39	0.01	0.27	0.04	0.01	0.02	758.58	760.71
2038	0.08	3.11	0.39	0.01	0.25	0.04	0.01	0.02	747.68	749.67
2039	0.08	3.11	0.39	0.01	0.25	0.03	0.01	0.02	747.34	749.30
2040	0.08	3.11	0.39	0.01	0.25	0.04	0.01	0.02	747.53	749.51
2041	0.08	3.11	0.39	0.01	0.25	0.04	0.01	0.02	747.47	749.45
2042	0.08	3.11	0.39	0.01	0.26	0.04	0.01	0.02	747.67	749.69
2043	0.08	3.11	0.39	0.01	0.26	0.04	0.01	0.02	747.64	749.65
2044	0.08	3.11	0.39	0.01	0.25	0.04	0.01	0.02	747.36	749.34
2045	0.08	3.11	0.39	0.01	0.25	0.04	0.01	0.02	747.34	749.32
2046	0.08	3.11	0.39	0.01	0.25	0.04	0.01	0.02	747.32	749.31
2047	0.08	3.11	0.39	0.01	0.25	0.04	0.01	0.02	747.31	749.29
2048	0.08	3.11	0.39	0.01	0.26	0.04	0.01	0.02	747.54	749.56
2049	0.08	3.11	0.39	0.01	0.25	0.04	0.01	0.02	747.29	749.27
Peak	1.87	70.77	14.80	0.15	8.56	1.09	0.18	2.48	14,573.40	14,644.58

Operational Emissions Summary
Unmitigated

	Daily Emissions (lbs/day)						Annual Emissions (tons/year)						(MT/Year)
Year	**ROG**	**CO**	**NOX**	**PM10**	**PM2.5**	**SOX**	**ROG**	**CO**	**NOX**	**PM10**	**PM2.5**	**SOX**	**CO2e**
2019	56.17	201.90	196.83	331.06	62.88	38.00	8.98	32.12	30.33	53.67	10.60	6.77	153865.55
2020	56.01	199.64	225.45	348.15	64.50	38.13	8.94	31.64	34.02	56.16	10.83	6.79	155605.13
2021	56.25	199.66	225.66	356.13	65.39	38.18	8.98	31.65	34.70	57.60	10.99	6.80	156551.02
2022	56.07	198.16	207.35	356.72	65.35	38.18	8.96	31.39	31.98	57.70	10.99	6.80	156509.89
2023	90.90	308.74	198.25	377.70	83.77	55.61	8.85	31.05	25.14	58.13	11.00	6.80	275299.44
2024	91.87	313.22	224.84	415.10	87.95	55.81	9.04	31.95	30.72	64.23	11.70	6.84	278948.02
2025	92.37	315.37	233.47	432.48	89.90	55.92	9.12	32.29	32.17	67.00	12.01	6.86	280663.63
2026	92.59	315.98	232.63	442.55	91.00	55.97	9.16	32.41	32.23	68.67	12.20	6.87	281652.15
2027	92.59	315.72	225.37	446.09	91.34	55.99	9.17	32.37	31.11	69.26	12.25	6.87	281920.67
2028	92.76	316.43	223.22	454.69	92.26	56.03	9.20	32.51	30.87	70.69	12.41	6.88	282708.85
2029	92.83	316.51	218.93	457.62	92.58	56.05	9.20	32.46	29.91	71.04	12.44	6.88	282897.83
2030	92.63	315.15	208.48	455.32	92.26	56.02	9.18	32.28	28.41	70.79	12.41	6.88	282605.95
2031	92.34	313.27	197.34	447.36	91.34	55.97	9.13	31.93	26.45	69.47	12.25	6.87	281744.58
2032	92.18	312.15	189.83	443.72	90.90	55.95	9.10	31.73	25.17	68.87	12.18	6.86	281318.89
2033	92.15	311.78	185.55	444.41	90.96	55.95	9.09	31.66	24.46	68.99	12.19	6.86	281318.38
2034	92.09	311.32	181.31	443.69	90.87	55.94	9.08	31.58	23.76	68.87	12.18	6.86	281246.73
2035	92.07	311.10	178.17	444.39	90.93	55.95	9.08	31.54	23.24	68.98	12.19	6.86	281270.49
2036	92.13	311.35	177.16	447.95	91.31	55.96	9.09	31.59	23.10	69.57	12.25	6.87	281551.84
2037	92.12	311.24	174.95	446.57	91.17	55.96	9.08	31.51	22.54	69.23	12.21	6.86	281363.39
2038	91.93	310.14	169.89	440.78	90.51	55.93	9.04	31.31	21.65	68.27	12.10	6.86	280731.54
2039	91.81	309.40	166.21	437.15	90.09	55.90	9.02	31.17	21.01	67.67	12.03	6.85	280315.73
2040	91.63	308.34	161.77	432.05	89.50	55.87	9.00	31.04	20.41	66.95	11.95	6.85	279892.80
2041	91.52	307.73	159.02	429.14	89.17	55.85	8.98	30.93	19.92	66.46	11.89	6.84	279530.88
2042	91.43	307.17	156.67	425.54	88.77	55.83	8.96	30.82	19.48	65.85	11.82	6.84	279169.51
2043	91.31	306.44	153.92	421.21	88.28	55.80	8.94	30.68	18.99	65.14	11.74	6.84	278720.65
2044	91.15	305.50	150.59	416.82	87.77	55.77	8.92	30.57	18.57	64.53	11.67	6.83	278357.06
2045	91.06	304.97	148.56	413.93	87.45	55.75	8.90	30.47	18.19	64.04	11.62	6.83	278019.82
2046	90.95	304.34	146.45	410.31	87.04	55.73	8.88	30.35	17.81	63.44	11.55	6.82	277631.43
2047	90.85	303.75	144.56	406.01	86.57	55.71	8.86	30.24	17.45	62.73	11.47	6.82	277257.72
2048	90.74	303.08	142.50	402.38	86.15	55.68	8.84	30.11	17.07	62.13	11.40	6.82	276830.70
2049	90.33	300.68	135.67	388.61	84.60	55.60	8.78	29.72	15.95	59.94	11.15	6.80	275485.98
2050	90.18	299.81	133.15	384.23	84.10	55.57	8.76	29.62	15.65	59.34	11.08	6.80	275139.85
Peak	92.83	316.51	233.47	457.62	92.58	56.05	9.20	32.51	34.70	71.04	12.44	6.88	282,897.83
Threshold	55.00	NA	55.00	80.00	NA	NA							
Significant?	YES	NO	YES	YES	NO	NO							

Operational Emissions Summary
Mitigated

	Daily Emissions (lbs/day)						Annual Emissions (tons/year)						(MT/Year)
Year	**ROG**	**CO**	**NOX**	**PM10**	**PM2.5**	**SOX**	**ROG**	**CO**	**NOX**	**PM10**	**PM2.5**	**SOX**	**CO2e**
2019	54.42	196.34	108.04	48.29	33.90	37.97	8.66	31.10	14.13	8.23	5.92	6.77	153319.26
2020	54.64	195.74	121.59	49.86	34.22	38.09	8.69	30.93	15.07	8.45	5.97	6.78	154907.35
2021	54.77	195.36	119.78	50.59	34.38	38.14	8.71	30.87	15.38	8.59	6.00	6.79	155809.74
2022	54.70	194.04	114.86	50.61	34.36	38.14	8.71	30.64	15.10	8.60	6.00	6.79	155841.70
2023	90.11	305.59	140.07	69.15	52.71	55.58	15.22	51.03	21.27	12.00	9.37	9.98	274782.60
2024	90.72	308.48	144.78	72.18	53.36	55.77	15.35	51.63	22.86	12.54	9.50	10.01	278222.06
2025	91.10	309.97	150.18	73.75	53.74	55.87	15.41	51.85	23.72	12.79	9.56	10.03	279895.07
2026	91.28	310.25	151.61	74.62	53.93	55.93	15.45	51.91	24.19	12.94	9.60	10.04	280897.00
2027	91.32	309.98	151.07	74.91	53.99	55.95	15.46	51.87	24.30	13.00	9.61	10.04	281223.57
2028	91.47	310.42	152.31	75.64	54.15	55.99	15.49	51.96	24.68	13.12	9.64	10.05	282038.13
2029	91.57	310.48	153.65	75.97	54.24	56.02	15.49	51.91	24.75	13.16	9.65	10.05	282282.41
2030	91.44	309.35	150.47	75.68	54.15	55.99	15.48	51.77	24.58	13.13	9.64	10.05	282070.52
2031	91.27	307.86	147.43	75.00	53.99	55.95	15.45	51.49	24.10	13.02	9.61	10.04	281297.14
2032	91.18	306.98	145.66	74.69	53.91	55.93	15.43	51.33	23.85	12.96	9.60	10.04	280935.31
2033	91.17	306.71	145.19	74.74	53.92	55.93	15.43	51.29	23.85	12.97	9.60	10.04	280985.48
2034	91.16	306.36	144.56	74.70	53.91	55.93	15.43	51.23	23.80	12.96	9.60	10.04	280961.47
2035	91.16	306.22	144.29	74.76	53.93	55.93	15.43	51.20	23.81	12.97	9.60	10.04	281023.74
2036	91.22	306.40	144.82	75.04	53.99	55.95	15.44	51.24	23.95	13.02	9.61	10.04	281332.32
2037	91.24	306.40	145.13	75.00	53.99	55.95	15.44	51.18	23.85	13.00	9.61	10.04	281175.98
2038	91.11	305.56	143.10	74.49	53.87	55.92	15.41	51.02	23.51	12.91	9.58	10.04	280576.47
2039	91.02	304.99	141.68	74.16	53.79	55.89	15.40	50.92	23.29	12.85	9.57	10.03	280186.04
2040	90.88	304.11	139.28	73.68	53.67	55.86	15.38	50.82	23.05	12.79	9.55	10.03	279785.80
2041	90.81	303.63	138.11	73.41	53.60	55.84	15.37	50.73	22.85	12.74	9.54	10.02	279441.29
2042	90.74	303.20	137.07	73.11	53.53	55.82	15.36	50.64	22.65	12.69	9.53	10.02	279093.68
2043	90.65	302.63	135.68	72.73	53.45	55.80	15.34	50.53	22.41	12.62	9.51	10.02	278658.16
2044	90.51	301.83	133.57	72.30	53.34	55.77	15.32	50.45	22.21	12.57	9.50	10.01	278307.26
2045	90.45	301.43	132.58	72.04	53.28	55.75	15.31	50.37	22.02	12.52	9.49	10.01	277980.32
2046	90.37	300.94	131.40	71.72	53.20	55.73	15.30	50.28	21.81	12.46	9.48	10.00	277600.07
2047	90.29	300.49	130.33	71.38	53.13	55.71	15.28	50.19	21.61	12.40	9.46	10.00	277232.91
2048	90.21	299.96	129.09	71.05	53.04	55.68	15.27	50.09	21.38	12.34	9.45	10.00	276811.42
2049	89.88	298.02	124.33	69.80	52.74	55.60	15.21	49.78	20.63	12.14	9.40	9.98	275472.86
2050	89.75	297.27	122.40	69.37	52.64	55.57	15.20	49.70	20.44	12.09	9.39	9.98	275127.50
Peak	91.57	310.48	153.65	75.97	54.24	56.02	15.49	51.96	24.75	13.16	9.65	10.05	282,282.41
Threshold	55.00	NA	55.00	80.00	NA	NA							
Significant?	YES	NO	YES	NO	NO	NO							

ATTACHMENT B

CalEEMod v.2013.2.2 Output Files

AERA - Santa Barbara - ECC On-Site Construction Equipment Years -3 thru 4

Santa Barbara-North of Santa Ynez County, Annual

1.0 Project Characteristics

1.1 Land Usage

Land Uses	Size	Metric	Lot Acreage	Floor Surface Area	Population
User Defined Industrial	2,100.00	User Defined Unit	2,100.00	0.00	0

1.2 Other Project Characteristics

Urbanization	Rural	**Wind Speed (m/s)**	3.1	**Precipitation Freq (Days)**	37
Climate Zone	4			**Operational Year**	2035
Utility Company	Pacific Gas & Electric Company				
CO2 Intensity (lb/MWhr)	641.35	**CH4 Intensity (lb/MWhr)**	0.029	**N2O Intensity (lb/MWhr)**	0.006

1.3 User Entered Comments & Non-Default Data

Project Characteristics -

Land Use - The project will be located in the East Cat Canyon oil field on approximately 2,100 acres.

Construction Phase - Anticipated Construction Schedule Provided by the Project Applicant.

Off-road Equipment - Units and Hours/day provided by Project Applicant. HP were adjusted whenever data was available for the size of the equipment provided by the applicant.

Off-road Equipment - Units and Hours/day provided by Project Applicant. HP were adjusted whenever data was available for the size of the equipment provided by the applicant.

Off-road Equipment - Units and Hours/day provided by Project Applicant. HP were adjusted whenever data was available for the size of the equipment provided by the applicant.

Off-road Equipment - Units and Hours/day provided by Project Applicant. HP were adjusted whenever data was available for the size of the equipment provided by the applicant.

Off-road Equipment - Units and Hours/day provided by Project Applicant. HP were adjusted whenever data was available for the size of the equipment provided by the applicant.

Off-road Equipment - Units and Hours/day provided by Project Applicant. HP were adjusted whenever data was available for the size of the equipment provided by the applicant.

Off-road Equipment - Units and Hours/day provided by Project Applicant. HP were adjusted whenever data was available for the size of the equipment provided by the applicant.

Off-road Equipment - Units and Hours/day provided by Project Applicant. HP were adjusted whenever data was available for the size of the equipment provided by the applicant.

Off-road Equipment - Units and Hours/day provided by Project Applicant. HP were adjusted whenever data was available for the size of the equipment provided by the applicant.

Off-road Equipment - Units and Hours/day provided by Project Applicant. HP were adjusted whenever data was available for the size of the equipment provided by the applicant.

Off-road Equipment - Units and Hours/day provided by Project Applicant. HP were adjusted whenever data was available for the size of the equipment provided by the applicant.

Off-road Equipment - Units and Hours/day provided by Project Applicant. HP were adjusted whenever data was available for the size of the equipment provided by the applicant.

Off-road Equipment - Units and Hours/day provided by Project Applicant. HP were adjusted whenever data was available for the size of the equipment provided by the applicant.

Off-road Equipment - Units and Hours/day provided by Project Applicant. HP were adjusted whenever data was available for the size of the equipment provided by the applicant.

Off-road Equipment - Units and Hours/day provided by Project Applicant. HP were adjusted whenever data was available for the size of the equipment provided by the applicant.

Off-road Equipment - Units and Hours/day provided by Project Applicant. HP were adjusted whenever data was available for the size of the equipment provided by the applicant.

Off-road Equipment - Units and Hours/day provided by Project Applicant. HP were adjusted whenever data was available for the size of the equipment provided by the applicant.

Off-road Equipment - Units and Hours/day provided by Project Applicant. HP were adjusted whenever data was available for the size of the equipment provided by the applicant.

Off-road Equipment - Units and Hours/day provided by Project Applicant. HP were adjusted whenever data was available for the size of the equipment provided by the applicant.

Off-road Equipment - Units and Hours/day provided by Project Applicant. HP were adjusted whenever data was available for the size of the equipment provided by the applicant.

Off-road Equipment - Units and Hours/day provided by Project Applicant. HP were adjusted whenever data was available for the size of the equipment provided by the applicant.

Off-road Equipment - Units and Hours/day provided by Project Applicant. HP were adjusted whenever data was available for the size of the equipment provided by the applicant.

Off-road Equipment - Units and Hours/day provided by Project Applicant. HP were adjusted whenever data was available for the size of the equipment provided by the applicant.

Off-road Equipment - Units and Hours/day provided by Project Applicant. HP were adjusted whenever data was available for the size of the equipment provided by the applicant.

Off-road Equipment - Units and Hours/day provided by Project Applicant. HP were adjusted whenever data was available for the size of the equipment provided

by the applicant.
Off-road Equipment - Units and Hours/day provided by Project Applicant. HP were adjusted whenever data was available for the size of the equipment provided by the applicant.

Off-road Equipment - Units and Hours/day provided by Project Applicant. HP were adjusted whenever data was available for the size of the equipment provided by the applicant.

Off-road Equipment - Units and Hours/day provided by Project Applicant. HP were adjusted whenever data was available for the size of the equipment provided by the applicant.

Off-road Equipment - Units and Hours/day provided by Project Applicant. HP were adjusted whenever data was available for the size of the equipment provided by the applicant.

Off-road Equipment - Units and Hours/day provided by Project Applicant. HP were adjusted whenever data was available for the size of the equipment provided by the applicant.

Off-road Equipment - Units and Hours/day provided by Project Applicant. HP were adjusted whenever data was available for the size of the equipment provided by the applicant.

Off-road Equipment - Units and Hours/day provided by Project Applicant. HP were adjusted whenever data was available for the size of the equipment provided by the applicant.

Off-road Equipment - Units and Hours/day provided by Project Applicant. HP were adjusted whenever data was available for the size of the equipment provided by the applicant.

Off-road Equipment - Units and Hours/day provided by Project Applicant. HP were adjusted whenever data was available for the size of the equipment provided by the applicant.

Off-road Equipment - Units and Hours/day provided by Project Applicant. HP were adjusted whenever data was available for the size of the equipment provided by the applicant.

Off-road Equipment - Units and Hours/day provided by Project Applicant. HP were adjusted whenever data was available for the size of the equipment provided by the applicant.

Off-road Equipment - Units and Hours/day provided by Project Applicant. HP were adjusted whenever data was available for the size of the equipment provided by the applicant.

Off-road Equipment - Units and Hours/day provided by Project Applicant. HP were adjusted whenever data was available for the size of the equipment provided by the applicant.

Off-road Equipment - Units and Hours/day provided by Project Applicant. HP were adjusted whenever data was available for the size of the equipment provided by the applicant.

Off-road Equipment - Units and Hours/day provided by Project Applicant. HP were adjusted whenever data was available for the size of the equipment provided by the applicant.

Off-road Equipment - Units and Hours/day provided by Project Applicant. HP were adjusted whenever data was available for the size of the equipment provided by the applicant.

Off-road Equipment - Units and Hours/day provided by Project Applicant. HP were adjusted whenever data was available for the size of the equipment provided by the applicant.

Off-road Equipment - Units and Hours/day provided by Project Applicant. HP were adjusted whenever data was available for the size of the equipment provided by the applicant.

Off-road Equipment - Units and Hours/day provided by Project Applicant. HP were adjusted whenever data was available for the size of the equipment provided by the applicant.

Off-road Equipment - Units and Hours/day provided by Project Applicant. HP were adjusted whenever data was available for the size of the equipment provided by the applicant.

Off-road Equipment - Units and Hours/day provided by Project Applicant. HP were adjusted whenever data was available for the size of the equipment provided by the applicant.

Off-road Equipment - Units and Hours/day provided by Project Applicant. HP were adjusted whenever data was available for the size of the equipment provided by the applicant.

Off-road Equipment - Units and Hours/day provided by Project Applicant. HP were adjusted whenever data was available for the size of the equipment provided by the applicant.

Off-road Equipment - Units and Hours/day provided by Project Applicant. HP were adjusted whenever data was available for the size of the equipment provided by the applicant.

Off-road Equipment - Units and Hours/day provided by Project Applicant. HP were adjusted whenever data was available for the size of the equipment provided by the applicant.

Off-road Equipment - Units and Hours/day provided by Project Applicant. HP were adjusted whenever data was available for the size of the equipment provided by the applicant.

Off-road Equipment - Units and Hours/day provided by Project Applicant. HP were adjusted whenever data was available for the size of the equipment provided by the applicant.

Off-road Equipment - Units and Hours/day provided by Project Applicant. HP were adjusted whenever data was available for the size of the equipment provided by the applicant.

Off-road Equipment - Units and Hours/day provided by Project Applicant. HP were adjusted whenever data was available for the size of the equipment provided by the applicant.

Off-road Equipment - Units and Hours/day provided by Project Applicant. HP were adjusted whenever data was available for the size of the equipment provided by the applicant.

Off-road Equipment - Units and Hours/day provided by Project Applicant. HP were adjusted whenever data was available for the size of the equipment provided by the applicant.

Off-road Equipment - Units and Hours/day provided by Project Applicant. HP were adjusted whenever data was available for the size of the equipment provided by the applicant.

Off-road Equipment - Units and Hours/day provided by Project Applicant. HP were adjusted whenever data was available for the size of the equipment provided by the applicant.

Off-road Equipment - Units and Hours/day provided by Project Applicant. HP were adjusted whenever data was available for the size of the equipment provided by the applicant.

Off-road Equipment - Units and Hours/day provided by Project Applicant. HP were adjusted whenever data was available for the size of the equipment provided by the applicant.

Off-road Equipment - Units and Hours/day provided by Project Applicant. HP were adjusted whenever data was available for the size of the equipment provided by the applicant.

Off-road Equipment - Units and Hours/day provided by Project Applicant. HP were adjusted whenever data was available for the size of the equipment provided by the applicant.

Off-road Equipment - Units and Hours/day provided by Project Applicant. HP were adjusted whenever data was available for the size of the equipment provided by the applicant.

Off-road Equipment - Units and Hours/day provided by Project Applicant. HP were adjusted whenever data was available for the size of the equipment provided by the applicant.

Off-road Equipment - Units and Hours/day provided by Project Applicant. HP were adjusted whenever data was available for the size of the equipment provided by the applicant.

Off-road Equipment - Units and Hours/day provided by Project Applicant. HP were adjusted whenever data was available for the size of the equipment provided by the applicant.

Off-road Equipment - Units and Hours/day provided by Project Applicant. HP were adjusted whenever data was available for the size of the equipment provided by the applicant.

Off-road Equipment - Units and Hours/day provided by Project Applicant. HP were adjusted whenever data was available for the size of the equipment provided by the applicant.

Off-road Equipment - Units and Hours/day provided by Project Applicant. HP were adjusted whenever data was available for the size of the equipment provided by the applicant.

Off-road Equipment - Units and Hours/day provided by Project Applicant. HP were adjusted whenever data was available for the size of the equipment provided by the applicant.

Off-road Equipment - Units and Hours/day provided by Project Applicant. HP were adjusted whenever data was available for the size of the equipment provided by the applicant.

Off-road Equipment - Units and Hours/day provided by Project Applicant. HP were adjusted whenever data was available for the size of the equipment provided by the applicant.

Off-road Equipment - Units and Hours/day provided by Project Applicant. HP were adjusted whenever data was available for the size of the equipment provided by the applicant.

Off-road Equipment - Units and Hours/day provided by Project Applicant. HP were adjusted whenever data was available for the size of the equipment provided by the applicant.

Off-road Equipment - Units and Hours/day provided by Project Applicant. HP were adjusted whenever data was available for the size of the equipment provided by the applicant.

Off-road Equipment - Units and Hours/day provided by Project Applicant. HP were adjusted whenever data was available for the size of the equipment provided by the applicant.

Off-road Equipment - Units and Hours/day provided by Project Applicant. HP were adjusted whenever data was available for the size of the equipment provided by the applicant.

Off-road Equipment - Units and Hours/day provided by Project Applicant. HP were adjusted whenever data was available for the size of the equipment provided by the applicant.

Off-road Equipment - Units and Hours/day provided by Project Applicant. HP were adjusted whenever data was available for the size of the equipment provided by the applicant.

Off-road Equipment - Units and Hours/day provided by Project Applicant. HP were adjusted whenever data was available for the size of the equipment provided by the applicant.

Off-road Equipment - Units and Hours/day provided by Project Applicant. HP were adjusted whenever data was available for the size of the equipment provided by the applicant.

Off-road Equipment - Units and Hours/day provided by Project Applicant. HP were adjusted whenever data was available for the size of the equipment provided

by the applicant.
Off-road Equipment - Units and Hours/day provided by Project Applicant. HP were adjusted whenever data was available for the size of the equipment provided by the applicant.

Trips and VMT - Employee Trips are included in the offsite calculations.

On-road Fugitive Dust -

Vehicle Trips - Construction Run Only

Vechicle Emission Factors -

Vechicle Emission Factors -

Vechicle Emission Factors -

Road Dust -

Consumer Products - Construction Run Only

Area Coating -

Landscape Equipment - Construction Run Only

Construction Off-road Equipment Mitigation - Using Tier 4 Final Engines to Mitigate Construction Emissions

Table Name	Column Name	Default Value	New Value
tblAreaCoating	ReapplicationRatePercent	10	0
tblConstEquipMitigation	NumberOfEquipmentMitigated	0.00	39.00
tblConstEquipMitigation	NumberOfEquipmentMitigated	0.00	96.00
tblConstEquipMitigation	NumberOfEquipmentMitigated	0.00	12.00
tblConstEquipMitigation	NumberOfEquipmentMitigated	0.00	217.00
tblConstEquipMitigation	NumberOfEquipmentMitigated	0.00	312.00
tblConstEquipMitigation	NumberOfEquipmentMitigated	0.00	10.00
tblConstEquipMitigation	NumberOfEquipmentMitigated	0.00	98.00
tblConstEquipMitigation	NumberOfEquipmentMitigated	0.00	111.00
tblConstEquipMitigation	NumberOfEquipmentMitigated	0.00	51.00
tblConstEquipMitigation	NumberOfEquipmentMitigated	0.00	1,120.00
tblConstEquipMitigation	NumberOfEquipmentMitigated	0.00	106.00
tblConstEquipMitigation	NumberOfEquipmentMitigated	0.00	62.00

tblConstEquipMitigation	NumberOfEquipmentMitigated	0.00	33.00
tblConstEquipMitigation	NumberOfEquipmentMitigated	0.00	112.00
tblConstEquipMitigation	NumberOfEquipmentMitigated	0.00	298.00
tblConstEquipMitigation	Tier	No Change	Tier 4 Final
tblConstEquipMitigation	Tier	No Change	Tier 4 Final
tblConstEquipMitigation	Tier	No Change	Tier 4 Final
tblConstEquipMitigation	Tier	No Change	Tier 4 Final
tblConstEquipMitigation	Tier	No Change	Tier 4 Final
tblConstEquipMitigation	Tier	No Change	Tier 4 Final
tblConstEquipMitigation	Tier	No Change	Tier 4 Final
tblConstEquipMitigation	Tier	No Change	Tier 4 Final
tblConstEquipMitigation	Tier	No Change	Tier 4 Final
tblConstEquipMitigation	Tier	No Change	Tier 4 Final
tblConstEquipMitigation	Tier	No Change	Tier 4 Final
tblConstEquipMitigation	Tier	No Change	Tier 4 Final
tblConstEquipMitigation	Tier	No Change	Tier 4 Final
tblConstEquipMitigation	Tier	No Change	Tier 4 Final
tblConstEquipMitigation	Tier	No Change	Tier 4 Final
tblConstructionPhase	NumDays	155,000.00	26.00
tblConstructionPhase	NumDays	155,000.00	27.00
tblConstructionPhase	NumDays	155,000.00	26.00
tblConstructionPhase	NumDays	155,000.00	26.00
tblConstructionPhase	NumDays	155,000.00	27.00
tblConstructionPhase	NumDays	155,000.00	24.00
tblConstructionPhase	NumDays	155,000.00	27.00
tblConstructionPhase	NumDays	155,000.00	25.00
tblConstructionPhase	NumDays	155,000.00	27.00
tblConstructionPhase	NumDays	155,000.00	26.00

tblConstructionPhase	NumDays	155,000.00	26.00
tblConstructionPhase	NumDays	155,000.00	24.00
tblConstructionPhase	NumDays	155,000.00	27.00
tblConstructionPhase	NumDays	155,000.00	25.00
tblConstructionPhase	NumDays	155,000.00	27.00
tblConstructionPhase	NumDays	155,000.00	26.00
tblConstructionPhase	NumDays	155,000.00	26.00
tblConstructionPhase	NumDays	155,000.00	27.00
tblConstructionPhase	NumDays	155,000.00	24.00
tblConstructionPhase	NumDays	155,000.00	26.00
tblConstructionPhase	NumDays	155,000.00	26.00
tblConstructionPhase	NumDays	155,000.00	27.00
tblConstructionPhase	NumDays	155,000.00	27.00
tblConstructionPhase	NumDays	155,000.00	25.00
tblConstructionPhase	NumDays	155,000.00	27.00
tblConstructionPhase	NumDays	155,000.00	27.00
tblConstructionPhase	NumDays	155,000.00	25.00
tblConstructionPhase	NumDays	155,000.00	27.00
tblConstructionPhase	NumDays	155,000.00	26.00
tblConstructionPhase	NumDays	155,000.00	26.00
tblConstructionPhase	NumDays	155,000.00	27.00
tblConstructionPhase	NumDays	155,000.00	24.00
tblConstructionPhase	NumDays	155,000.00	26.00
tblConstructionPhase	NumDays	155,000.00	25.00
tblConstructionPhase	NumDays	155,000.00	26.00
tblConstructionPhase	NumDays	155,000.00	26.00
tblConstructionPhase	NumDays	155,000.00	26.00
tblConstructionPhase	NumDays	155,000.00	27.00

tblConstructionPhase	NumDays	155,000.00	26.00
tblConstructionPhase	NumDays	155,000.00	26.00
tblConstructionPhase	NumDays	155,000.00	27.00
tblConstructionPhase	NumDays	155,000.00	25.00
tblConstructionPhase	NumDays	155,000.00	27.00
tblConstructionPhase	NumDays	155,000.00	26.00
tblConstructionPhase	NumDays	155,000.00	27.00
tblConstructionPhase	NumDays	155,000.00	24.00
tblConstructionPhase	NumDays	155,000.00	27.00
tblConstructionPhase	NumDays	155,000.00	26.00
tblConstructionPhase	NumDays	155,000.00	26.00
tblConstructionPhase	NumDays	155,000.00	26.00
tblConstructionPhase	NumDays	155,000.00	27.00
tblConstructionPhase	NumDays	155,000.00	26.00
tblConstructionPhase	NumDays	155,000.00	26.00
tblConstructionPhase	NumDays	155,000.00	26.00
tblConstructionPhase	NumDays	155,000.00	26.00
tblConstructionPhase	NumDays	155,000.00	26.00
tblConstructionPhase	NumDays	155,000.00	27.00
tblConstructionPhase	NumDays	155,000.00	26.00
tblConstructionPhase	NumDays	155,000.00	24.00
tblConstructionPhase	NumDays	155,000.00	27.00
tblConstructionPhase	NumDays	155,000.00	26.00
tblConstructionPhase	NumDays	155,000.00	26.00
tblConstructionPhase	NumDays	155,000.00	26.00
tblConstructionPhase	NumDays	155,000.00	26.00
tblConstructionPhase	NumDays	155,000.00	27.00
tblConstructionPhase	NumDays	155,000.00	26.00

tblConstructionPhase	NumDays	155,000.00	26.00
tblConstructionPhase	NumDays	155,000.00	26.00
tblConstructionPhase	NumDays	155,000.00	26.00
tblConstructionPhase	NumDays	155,000.00	27.00
tblConstructionPhase	NumDays	155,000.00	26.00
tblConstructionPhase	NumDays	155,000.00	24.00
tblConstructionPhase	NumDays	155,000.00	27.00
tblConstructionPhase	NumDays	155,000.00	25.00
tblConstructionPhase	NumDays	155,000.00	27.00
tblConstructionPhase	NumDays	155,000.00	26.00
tblConstructionPhase	NumDays	155,000.00	26.00
tblConstructionPhase	NumDays	155,000.00	27.00
tblConstructionPhase	NumDays	155,000.00	27.00
tblConstructionPhase	NumDays	155,000.00	26.00
tblConstructionPhase	NumDays	155,000.00	26.00
tblConstructionPhase	NumDays	155,000.00	26.00
tblConstructionPhase	NumDays	155,000.00	26.00
tblConstructionPhase	NumDays	155,000.00	25.00
tblConstructionPhase	NumDaysWeek	5.00	6.00
tblConstructionPhase	NumDaysWeek	5.00	6.00
tblConstructionPhase	NumDaysWeek	5.00	6.00
tblConstructionPhase	NumDaysWeek	5.00	6.00
tblConstructionPhase	NumDaysWeek	5.00	6.00
tblConstructionPhase	NumDaysWeek	5.00	6.00
tblConstructionPhase	NumDaysWeek	5.00	6.00
tblConstructionPhase	NumDaysWeek	5.00	6.00
tblConstructionPhase	NumDaysWeek	5.00	6.00
tblConstructionPhase	NumDaysWeek	5.00	6.00

tblConstructionPhase	NumDaysWeek	5.00	6.00
tblConstructionPhase	NumDaysWeek	5.00	6.00
tblConstructionPhase	NumDaysWeek	5.00	6.00
tblConstructionPhase	NumDaysWeek	5.00	6.00
tblConstructionPhase	NumDaysWeek	5.00	6.00
tblConstructionPhase	NumDaysWeek	5.00	6.00
tblConstructionPhase	NumDaysWeek	5.00	6.00
tblConstructionPhase	NumDaysWeek	5.00	6.00
tblConstructionPhase	NumDaysWeek	5.00	6.00
tblConstructionPhase	NumDaysWeek	5.00	6.00
tblConstructionPhase	NumDaysWeek	5.00	6.00
tblConstructionPhase	NumDaysWeek	5.00	6.00
tblConstructionPhase	NumDaysWeek	5.00	6.00
tblConstructionPhase	NumDaysWeek	5.00	6.00
tblConstructionPhase	NumDaysWeek	5.00	6.00
tblConstructionPhase	NumDaysWeek	5.00	6.00
tblConstructionPhase	NumDaysWeek	5.00	6.00
tblConstructionPhase	NumDaysWeek	5.00	6.00
tblConstructionPhase	NumDaysWeek	5.00	6.00
tblConstructionPhase	NumDaysWeek	5.00	6.00
tblConstructionPhase	NumDaysWeek	5.00	6.00
tblConstructionPhase	NumDaysWeek	5.00	6.00
tblConstructionPhase	NumDaysWeek	5.00	6.00
tblConstructionPhase	NumDaysWeek	5.00	6.00
tblConstructionPhase	NumDaysWeek	5.00	6.00
tblConstructionPhase	NumDaysWeek	5.00	6.00

tblConstructionPhase	NumDaysWeek	5.00	6.00
tblConstructionPhase	NumDaysWeek	5.00	6.00
tblConstructionPhase	NumDaysWeek	5.00	6.00
tblConstructionPhase	NumDaysWeek	5.00	6.00
tblConstructionPhase	NumDaysWeek	5.00	6.00
tblConstructionPhase	NumDaysWeek	5.00	6.00
tblConstructionPhase	NumDaysWeek	5.00	6.00
tblConstructionPhase	NumDaysWeek	5.00	6.00
tblConstructionPhase	NumDaysWeek	5.00	6.00
tblConstructionPhase	NumDaysWeek	5.00	6.00
tblConstructionPhase	NumDaysWeek	5.00	6.00
tblConstructionPhase	NumDaysWeek	5.00	6.00
tblConstructionPhase	NumDaysWeek	5.00	6.00
tblConstructionPhase	NumDaysWeek	5.00	6.00
tblConstructionPhase	NumDaysWeek	5.00	6.00
tblConstructionPhase	NumDaysWeek	5.00	6.00
tblConstructionPhase	NumDaysWeek	5.00	6.00
tblConstructionPhase	NumDaysWeek	5.00	6.00
tblConstructionPhase	NumDaysWeek	5.00	6.00
tblConstructionPhase	NumDaysWeek	5.00	6.00
tblConstructionPhase	NumDaysWeek	5.00	6.00
tblConstructionPhase	NumDaysWeek	5.00	6.00
tblConstructionPhase	NumDaysWeek	5.00	6.00
tblConstructionPhase	NumDaysWeek	5.00	6.00
tblConstructionPhase	NumDaysWeek	5.00	6.00
tblConstructionPhase	NumDaysWeek	5.00	6.00

tblConstructionPhase	NumDaysWeek	5.00	6.00
tblConstructionPhase	NumDaysWeek	5.00	6.00
tblConstructionPhase	NumDaysWeek	5.00	6.00
tblConstructionPhase	NumDaysWeek	5.00	6.00
tblConstructionPhase	NumDaysWeek	5.00	6.00
tblConstructionPhase	NumDaysWeek	5.00	6.00
tblConstructionPhase	NumDaysWeek	5.00	6.00
tblConstructionPhase	NumDaysWeek	5.00	6.00
tblConstructionPhase	NumDaysWeek	5.00	6.00
tblConstructionPhase	NumDaysWeek	5.00	6.00
tblConstructionPhase	NumDaysWeek	5.00	6.00
tblConstructionPhase	NumDaysWeek	5.00	6.00
tblConstructionPhase	NumDaysWeek	5.00	6.00
tblConstructionPhase	NumDaysWeek	5.00	6.00
tblConstructionPhase	NumDaysWeek	5.00	6.00
tblConstructionPhase	NumDaysWeek	5.00	6.00
tblConstructionPhase	NumDaysWeek	5.00	6.00
tblConstructionPhase	PhaseEndDate	11/1/2017	10/31/2017
tblConstructionPhase	PhaseEndDate	12/30/2017	12/31/2017
tblConstructionPhase	PhaseEndDate	3/30/2020	3/31/2020
tblConstructionPhase	PhaseEndDate	9/29/2017	9/30/2017
tblConstructionPhase	PhaseStartDate	9/30/2018	10/1/2018
tblConstructionPhase	PhaseStartDate	3/31/2019	4/1/2019
tblConstructionPhase	PhaseStartDate	6/30/2019	7/1/2019
tblConstructionPhase	PhaseStartDate	2/29/2020	3/1/2020
tblConstructionPhase	PhaseStartDate	5/31/2020	6/1/2020
tblConstructionPhase	PhaseStartDate	4/30/2017	5/1/2017

tblConstructionPhase	PhaseStartDate	1/31/2021	2/1/2021
tblConstructionPhase	PhaseStartDate	2/28/2021	3/1/2021
tblConstructionPhase	PhaseStartDate	10/31/2021	11/1/2021
tblConstructionPhase	PhaseStartDate	7/31/2022	8/1/2022
tblConstructionPhase	PhaseStartDate	4/30/2023	5/1/2023
tblLandUse	LotAcreage	0.00	2,100.00
tblOffRoadEquipment	HorsePower	226.00	62.00
tblOffRoadEquipment	HorsePower	226.00	62.00
tblOffRoadEquipment	HorsePower	226.00	150.00
tblOffRoadEquipment	HorsePower	226.00	62.00
tblOffRoadEquipment	HorsePower	226.00	150.00
tblOffRoadEquipment	HorsePower	226.00	62.00
tblOffRoadEquipment	HorsePower	226.00	150.00
tblOffRoadEquipment	HorsePower	226.00	62.00
tblOffRoadEquipment	HorsePower	226.00	150.00
tblOffRoadEquipment	HorsePower	226.00	62.00
tblOffRoadEquipment	HorsePower	226.00	150.00
tblOffRoadEquipment	HorsePower	226.00	240.00
tblOffRoadEquipment	HorsePower	226.00	62.00
tblOffRoadEquipment	HorsePower	226.00	150.00
tblOffRoadEquipment	HorsePower	226.00	62.00
tblOffRoadEquipment	HorsePower	226.00	150.00
tblOffRoadEquipment	HorsePower	226.00	62.00
tblOffRoadEquipment	HorsePower	226.00	150.00
tblOffRoadEquipment	HorsePower	226.00	62.00
tblOffRoadEquipment	HorsePower	226.00	62.00
tblOffRoadEquipment	HorsePower	226.00	62.00
tblOffRoadEquipment	HorsePower	226.00	62.00

tblOffRoadEquipment	HorsePower	226.00	150.00
tblOffRoadEquipment	HorsePower	226.00	62.00
tblOffRoadEquipment	HorsePower	226.00	150.00
tblOffRoadEquipment	HorsePower	226.00	62.00
tblOffRoadEquipment	HorsePower	226.00	150.00
tblOffRoadEquipment	HorsePower	226.00	62.00
tblOffRoadEquipment	HorsePower	226.00	150.00
tblOffRoadEquipment	HorsePower	226.00	62.00
tblOffRoadEquipment	HorsePower	226.00	150.00
tblOffRoadEquipment	HorsePower	226.00	62.00
tblOffRoadEquipment	HorsePower	226.00	150.00
tblOffRoadEquipment	HorsePower	226.00	62.00
tblOffRoadEquipment	HorsePower	226.00	150.00
tblOffRoadEquipment	HorsePower	226.00	62.00
tblOffRoadEquipment	HorsePower	226.00	150.00
tblOffRoadEquipment	HorsePower	226.00	62.00
tblOffRoadEquipment	HorsePower	226.00	62.00
tblOffRoadEquipment	HorsePower	226.00	62.00
tblOffRoadEquipment	HorsePower	226.00	62.00
tblOffRoadEquipment	HorsePower	226.00	150.00
tblOffRoadEquipment	HorsePower	226.00	62.00
tblOffRoadEquipment	HorsePower	226.00	150.00
tblOffRoadEquipment	HorsePower	226.00	62.00
tblOffRoadEquipment	HorsePower	226.00	150.00
tblOffRoadEquipment	HorsePower	226.00	62.00
tblOffRoadEquipment	HorsePower	226.00	150.00
tblOffRoadEquipment	HorsePower	226.00	62.00
tblOffRoadEquipment	HorsePower	226.00	150.00

tblOffRoadEquipment	HorsePower	226.00	62.00
tblOffRoadEquipment	HorsePower	226.00	150.00
tblOffRoadEquipment	HorsePower	226.00	62.00
tblOffRoadEquipment	HorsePower	226.00	62.00
tblOffRoadEquipment	HorsePower	226.00	62.00
tblOffRoadEquipment	HorsePower	89.00	73.00
tblOffRoadEquipment	HorsePower	89.00	73.00
tblOffRoadEquipment	HorsePower	89.00	73.00
tblOffRoadEquipment	HorsePower	89.00	73.00
tblOffRoadEquipment	HorsePower	89.00	73.00
tblOffRoadEquipment	HorsePower	89.00	73.00
tblOffRoadEquipment	HorsePower	89.00	73.00
tblOffRoadEquipment	HorsePower	89.00	73.00
tblOffRoadEquipment	HorsePower	89.00	73.00
tblOffRoadEquipment	HorsePower	89.00	73.00
tblOffRoadEquipment	HorsePower	89.00	73.00
tblOffRoadEquipment	HorsePower	89.00	73.00
tblOffRoadEquipment	HorsePower	89.00	73.00
tblOffRoadEquipment	HorsePower	89.00	73.00
tblOffRoadEquipment	HorsePower	89.00	73.00
tblOffRoadEquipment	HorsePower	89.00	73.00
tblOffRoadEquipment	HorsePower	89.00	73.00
tblOffRoadEquipment	HorsePower	89.00	73.00
tblOffRoadEquipment	HorsePower	89.00	73.00
tblOffRoadEquipment	HorsePower	89.00	73.00

tblOffRoadEquipment	HorsePower	89.00	73.00
tblOffRoadEquipment	HorsePower	89.00	73.00
tblOffRoadEquipment	HorsePower	89.00	73.00
tblOffRoadEquipment	HorsePower	89.00	73.00
tblOffRoadEquipment	HorsePower	89.00	73.00
tblOffRoadEquipment	HorsePower	89.00	73.00
tblOffRoadEquipment	HorsePower	89.00	73.00
tblOffRoadEquipment	HorsePower	89.00	73.00
tblOffRoadEquipment	HorsePower	89.00	73.00
tblOffRoadEquipment	HorsePower	89.00	73.00
tblOffRoadEquipment	HorsePower	84.00	18.00
tblOffRoadEquipment	HorsePower	84.00	18.00
tblOffRoadEquipment	HorsePower	84.00	18.00
tblOffRoadEquipment	HorsePower	84.00	18.00
tblOffRoadEquipment	HorsePower	84.00	18.00
tblOffRoadEquipment	HorsePower	84.00	18.00
tblOffRoadEquipment	HorsePower	84.00	18.00
tblOffRoadEquipment	HorsePower	84.00	18.00
tblOffRoadEquipment	HorsePower	84.00	18.00
tblOffRoadEquipment	HorsePower	84.00	18.00
tblOffRoadEquipment	HorsePower	84.00	18.00
tblOffRoadEquipment	HorsePower	84.00	18.00
tblOffRoadEquipment	HorsePower	84.00	18.00
tblOffRoadEquipment	HorsePower	84.00	18.00
tblOffRoadEquipment	HorsePower	84.00	18.00
tblOffRoadEquipment	HorsePower	84.00	18.00
tblOffRoadEquipment	HorsePower	84.00	18.00

tblOffRoadEquipment	HorsePower	84.00	18.00
tblOffRoadEquipment	HorsePower	84.00	18.00
tblOffRoadEquipment	HorsePower	84.00	18.00
tblOffRoadEquipment	HorsePower	84.00	18.00
tblOffRoadEquipment	HorsePower	84.00	18.00
tblOffRoadEquipment	HorsePower	84.00	18.00
tblOffRoadEquipment	HorsePower	84.00	18.00
tblOffRoadEquipment	HorsePower	84.00	18.00
tblOffRoadEquipment	HorsePower	84.00	18.00
tblOffRoadEquipment	HorsePower	84.00	18.00
tblOffRoadEquipment	HorsePower	84.00	18.00
tblOffRoadEquipment	HorsePower	84.00	18.00
tblOffRoadEquipment	HorsePower	84.00	18.00
tblOffRoadEquipment	HorsePower	84.00	18.00
tblOffRoadEquipment	HorsePower	84.00	18.00
tblOffRoadEquipment	HorsePower	84.00	18.00
tblOffRoadEquipment	HorsePower	84.00	18.00
tblOffRoadEquipment	HorsePower	84.00	18.00
tblOffRoadEquipment	HorsePower	84.00	18.00
tblOffRoadEquipment	HorsePower	84.00	18.00
tblOffRoadEquipment	HorsePower	84.00	18.00
tblOffRoadEquipment	HorsePower	84.00	18.00
tblOffRoadEquipment	HorsePower	84.00	18.00
tblOffRoadEquipment	HorsePower	84.00	18.00
tblOffRoadEquipment	HorsePower	84.00	18.00

tblOffRoadEquipment	HorsePower	84.00	18.00
tblOffRoadEquipment	HorsePower	84.00	18.00
tblOffRoadEquipment	HorsePower	97.00	67.00
tblOffRoadEquipment	HorsePower	97.00	67.00
tblOffRoadEquipment	HorsePower	97.00	67.00
tblOffRoadEquipment	HorsePower	97.00	67.00
tblOffRoadEquipment	HorsePower	97.00	67.00
tblOffRoadEquipment	HorsePower	97.00	67.00
tblOffRoadEquipment	HorsePower	97.00	67.00
tblOffRoadEquipment	HorsePower	97.00	67.00
tblOffRoadEquipment	HorsePower	97.00	67.00
tblOffRoadEquipment	HorsePower	97.00	67.00
tblOffRoadEquipment	HorsePower	97.00	67.00
tblOffRoadEquipment	HorsePower	97.00	67.00
tblOffRoadEquipment	HorsePower	97.00	67.00
tblOffRoadEquipment	HorsePower	97.00	67.00
tblOffRoadEquipment	HorsePower	97.00	67.00
tblOffRoadEquipment	HorsePower	97.00	67.00
tblOffRoadEquipment	HorsePower	97.00	67.00
tblOffRoadEquipment	HorsePower	97.00	100.00
tblOffRoadEquipment	HorsePower	97.00	67.00
tblOffRoadEquipment	HorsePower	97.00	100.00
tblOffRoadEquipment	HorsePower	97.00	67.00
tblOffRoadEquipment	HorsePower	97.00	67.00
tblOffRoadEquipment	HorsePower	97.00	67.00
tblOffRoadEquipment	HorsePower	97.00	67.00
tblOffRoadEquipment	HorsePower	97.00	67.00

tblOffRoadEquipment	HorsePower	97.00	67.00
tblOffRoadEquipment	HorsePower	97.00	67.00
tblOffRoadEquipment	HorsePower	97.00	67.00
tblOffRoadEquipment	HorsePower	97.00	67.00
tblOffRoadEquipment	HorsePower	97.00	67.00
tblOffRoadEquipment	HorsePower	97.00	67.00
tblOffRoadEquipment	HorsePower	97.00	100.00
tblOffRoadEquipment	HorsePower	97.00	100.00
tblOffRoadEquipment	HorsePower	97.00	67.00
tblOffRoadEquipment	HorsePower	97.00	67.00
tblOffRoadEquipment	HorsePower	97.00	100.00
tblOffRoadEquipment	HorsePower	97.00	67.00
tblOffRoadEquipment	HorsePower	97.00	100.00
tblOffRoadEquipment	HorsePower	97.00	67.00
tblOffRoadEquipment	HorsePower	97.00	67.00
tblOffRoadEquipment	HorsePower	97.00	67.00
tblOffRoadEquipment	HorsePower	97.00	67.00
tblOffRoadEquipment	HorsePower	97.00	67.00
tblOffRoadEquipment	HorsePower	46.00	48.00
tblOffRoadEquipment	HorsePower	46.00	48.00
tblOffRoadEquipment	HorsePower	46.00	48.00
tblOffRoadEquipment	HorsePower	46.00	48.00
tblOffRoadEquipment	HorsePower	46.00	48.00
tblOffRoadEquipment	HorsePower	46.00	48.00
tblOffRoadEquipment	HorsePower	46.00	48.00
tblOffRoadEquipment	HorsePower	46.00	48.00
tblOffRoadEquipment	HorsePower	46.00	48.00

tblOffRoadEquipment	HorsePower	46.00	48.00
tblOffRoadEquipment	HorsePower	46.00	48.00
tblOffRoadEquipment	HorsePower	46.00	48.00
tblOffRoadEquipment	HorsePower	46.00	48.00
tblOffRoadEquipment	HorsePower	46.00	48.00
tblOffRoadEquipment	HorsePower	46.00	42.00
tblOffRoadEquipment	HorsePower	46.00	48.00
tblOffRoadEquipment	HorsePower	46.00	42.00
tblOffRoadEquipment	HorsePower	46.00	48.00
tblOffRoadEquipment	HorsePower	46.00	42.00
tblOffRoadEquipment	HorsePower	46.00	48.00
tblOffRoadEquipment	HorsePower	46.00	42.00
tblOffRoadEquipment	HorsePower	46.00	48.00
tblOffRoadEquipment	HorsePower	46.00	42.00
tblOffRoadEquipment	HorsePower	46.00	48.00
tblOffRoadEquipment	HorsePower	46.00	42.00
tblOffRoadEquipment	HorsePower	46.00	48.00
tblOffRoadEquipment	HorsePower	46.00	42.00
tblOffRoadEquipment	HorsePower	46.00	48.00
tblOffRoadEquipment	HorsePower	46.00	42.00
tblOffRoadEquipment	HorsePower	46.00	48.00
tblOffRoadEquipment	HorsePower	46.00	42.00
tblOffRoadEquipment	HorsePower	46.00	48.00
tblOffRoadEquipment	HorsePower	46.00	18.00
tblOffRoadEquipment	HorsePower	46.00	42.00
tblOffRoadEquipment	HorsePower	46.00	42.00

tblOffRoadEquipment	HorsePower	46.00	42.00
tblOffRoadEquipment	HorsePower	46.00	42.00
tblOffRoadEquipment	HorsePower	46.00	42.00
tblOffRoadEquipment	HorsePower	46.00	42.00
tblOffRoadEquipment	HorsePower	46.00	42.00
tblOffRoadEquipment	HorsePower	46.00	42.00
tblOffRoadEquipment	HorsePower	46.00	42.00
tblOffRoadEquipment	HorsePower	46.00	42.00
tblOffRoadEquipment	HorsePower	46.00	42.00
tblOffRoadEquipment	HorsePower	46.00	42.00
tblOffRoadEquipment	HorsePower	46.00	42.00
tblOffRoadEquipment	HorsePower	46.00	42.00
tblOffRoadEquipment	HorsePower	46.00	48.00
tblOffRoadEquipment	HorsePower	46.00	48.00
tblOffRoadEquipment	HorsePower	46.00	48.00
tblOffRoadEquipment	HorsePower	46.00	48.00
tblOffRoadEquipment	HorsePower	46.00	48.00
tblOffRoadEquipment	HorsePower	46.00	48.00
tblOffRoadEquipment	HorsePower	46.00	48.00
tblOffRoadEquipment	HorsePower	46.00	18.00
tblOffRoadEquipment	HorsePower	46.00	48.00
tblOffRoadEquipment	HorsePower	46.00	48.00
tblOffRoadEquipment	HorsePower	62.00	24.00
tblOffRoadEquipment	HorsePower	62.00	24.00
tblOffRoadEquipment	HorsePower	62.00	24.00
tblOffRoadEquipment	HorsePower	62.00	24.00
tblOffRoadEquipment	HorsePower	62.00	24.00
tblOffRoadEquipment	HorsePower	62.00	24.00

tblOffRoadEquipment	HorsePower	62.00	24.00
tblOffRoadEquipment	HorsePower	62.00	24.00
tblOffRoadEquipment	HorsePower	62.00	24.00
tblOffRoadEquipment	HorsePower	62.00	24.00
tblOffRoadEquipment	HorsePower	62.00	24.00
tblOffRoadEquipment	HorsePower	62.00	24.00
tblOffRoadEquipment	HorsePower	62.00	24.00
tblOffRoadEquipment	HorsePower	62.00	24.00
tblOffRoadEquipment	HorsePower	62.00	24.00
tblOffRoadEquipment	HorsePower	62.00	24.00
tblOffRoadEquipment	HorsePower	62.00	24.00
tblOffRoadEquipment	HorsePower	62.00	24.00
tblOffRoadEquipment	HorsePower	62.00	40.00
tblOffRoadEquipment	HorsePower	62.00	24.00
tblOffRoadEquipment	HorsePower	62.00	24.00
tblOffRoadEquipment	HorsePower	62.00	24.00
tblOffRoadEquipment	HorsePower	62.00	24.00
tblOffRoadEquipment	HorsePower	62.00	24.00
tblOffRoadEquipment	HorsePower	62.00	24.00
tblOffRoadEquipment	HorsePower	62.00	24.00
tblOffRoadEquipment	HorsePower	62.00	24.00
tblOffRoadEquipment	HorsePower	62.00	60.00
tblOffRoadEquipment	HorsePower	62.00	24.00
tblOffRoadEquipment	HorsePower	62.00	24.00
tblOffRoadEquipment	HorsePower	78.00	50.00
tblOffRoadEquipment	HorsePower	78.00	50.00
tblOffRoadEquipment	HorsePower	78.00	50.00

tblOffRoadEquipment	HorsePower	78.00	50.00
tblOffRoadEquipment	HorsePower	78.00	50.00
tblOffRoadEquipment	HorsePower	78.00	50.00
tblOffRoadEquipment	HorsePower	78.00	50.00
tblOffRoadEquipment	HorsePower	78.00	50.00
tblOffRoadEquipment	HorsePower	78.00	50.00
tblOffRoadEquipment	HorsePower	78.00	50.00
tblOffRoadEquipment	HorsePower	78.00	50.00
tblOffRoadEquipment	HorsePower	78.00	50.00
tblOffRoadEquipment	HorsePower	78.00	50.00
tblOffRoadEquipment	HorsePower	78.00	50.00
tblOffRoadEquipment	HorsePower	78.00	50.00
tblOffRoadEquipment	HorsePower	78.00	50.00
tblOffRoadEquipment	HorsePower	78.00	50.00
tblOffRoadEquipment	HorsePower	78.00	50.00
tblOffRoadEquipment	HorsePower	78.00	50.00
tblOffRoadEquipment	HorsePower	78.00	50.00
tblOffRoadEquipment	HorsePower	78.00	50.00
tblOffRoadEquipment	HorsePower	78.00	50.00
tblOffRoadEquipment	HorsePower	78.00	50.00
tblOffRoadEquipment	HorsePower	78.00	50.00
tblOffRoadEquipment	HorsePower	78.00	50.00
tblOffRoadEquipment	HorsePower	78.00	50.00
tblOffRoadEquipment	HorsePower	78.00	50.00
tblOffRoadEquipment	HorsePower	78.00	50.00
tblOffRoadEquipment	HorsePower	78.00	50.00

tblOffRoadEquipment	HorsePower	78.00	50.00
tblOffRoadEquipment	HorsePower	78.00	50.00
tblOffRoadEquipment	HorsePower	78.00	50.00
tblOffRoadEquipment	HorsePower	78.00	50.00
tblOffRoadEquipment	HorsePower	81.00	6.00
tblOffRoadEquipment	HorsePower	81.00	20.00
tblOffRoadEquipment	HorsePower	81.00	8.00
tblOffRoadEquipment	HorsePower	81.00	6.00
tblOffRoadEquipment	HorsePower	81.00	20.00
tblOffRoadEquipment	HorsePower	81.00	8.00
tblOffRoadEquipment	HorsePower	81.00	6.00
tblOffRoadEquipment	HorsePower	81.00	20.00
tblOffRoadEquipment	HorsePower	81.00	8.00
tblOffRoadEquipment	HorsePower	81.00	6.00
tblOffRoadEquipment	HorsePower	81.00	20.00
tblOffRoadEquipment	HorsePower	81.00	8.00
tblOffRoadEquipment	HorsePower	208.00	585.00
tblOffRoadEquipment	HorsePower	208.00	207.00
tblOffRoadEquipment	HorsePower	208.00	232.00
tblOffRoadEquipment	HorsePower	208.00	585.00
tblOffRoadEquipment	HorsePower	208.00	207.00
tblOffRoadEquipment	HorsePower	208.00	232.00
tblOffRoadEquipment	HorsePower	208.00	585.00
tblOffRoadEquipment	HorsePower	208.00	207.00
tblOffRoadEquipment	HorsePower	208.00	232.00
tblOffRoadEquipment	HorsePower	208.00	585.00
tblOffRoadEquipment	HorsePower	208.00	207.00
tblOffRoadEquipment	HorsePower	208.00	232.00

tblOffRoadEquipment	HorsePower	208.00	585.00
tblOffRoadEquipment	HorsePower	208.00	207.00
tblOffRoadEquipment	HorsePower	208.00	232.00
tblOffRoadEquipment	HorsePower	208.00	585.00
tblOffRoadEquipment	HorsePower	208.00	207.00
tblOffRoadEquipment	HorsePower	208.00	232.00
tblOffRoadEquipment	HorsePower	208.00	585.00
tblOffRoadEquipment	HorsePower	208.00	207.00
tblOffRoadEquipment	HorsePower	208.00	232.00
tblOffRoadEquipment	HorsePower	208.00	585.00
tblOffRoadEquipment	HorsePower	208.00	207.00
tblOffRoadEquipment	HorsePower	208.00	232.00
tblOffRoadEquipment	HorsePower	208.00	585.00
tblOffRoadEquipment	HorsePower	208.00	207.00
tblOffRoadEquipment	HorsePower	208.00	232.00
tblOffRoadEquipment	HorsePower	208.00	585.00
tblOffRoadEquipment	HorsePower	208.00	207.00
tblOffRoadEquipment	HorsePower	208.00	232.00
tblOffRoadEquipment	HorsePower	208.00	585.00
tblOffRoadEquipment	HorsePower	208.00	207.00
tblOffRoadEquipment	HorsePower	208.00	232.00
tblOffRoadEquipment	HorsePower	208.00	585.00
tblOffRoadEquipment	HorsePower	208.00	207.00
tblOffRoadEquipment	HorsePower	208.00	232.00
tblOffRoadEquipment	HorsePower	208.00	585.00

tblOffRoadEquipment	HorsePower	208.00	232.00
tblOffRoadEquipment	HorsePower	208.00	585.00
tblOffRoadEquipment	HorsePower	208.00	207.00
tblOffRoadEquipment	HorsePower	208.00	232.00
tblOffRoadEquipment	HorsePower	208.00	232.00
tblOffRoadEquipment	HorsePower	208.00	232.00
tblOffRoadEquipment	HorsePower	208.00	232.00
tblOffRoadEquipment	HorsePower	208.00	585.00
tblOffRoadEquipment	HorsePower	208.00	207.00
tblOffRoadEquipment	HorsePower	208.00	232.00
tblOffRoadEquipment	HorsePower	208.00	585.00
tblOffRoadEquipment	HorsePower	208.00	207.00
tblOffRoadEquipment	HorsePower	208.00	232.00
tblOffRoadEquipment	HorsePower	208.00	585.00
tblOffRoadEquipment	HorsePower	208.00	207.00
tblOffRoadEquipment	HorsePower	208.00	585.00
tblOffRoadEquipment	HorsePower	208.00	207.00
tblOffRoadEquipment	HorsePower	208.00	232.00
tblOffRoadEquipment	HorsePower	208.00	232.00
tblOffRoadEquipment	HorsePower	208.00	585.00
tblOffRoadEquipment	HorsePower	208.00	207.00
tblOffRoadEquipment	HorsePower	208.00	232.00
tblOffRoadEquipment	HorsePower	208.00	585.00
tblOffRoadEquipment	HorsePower	208.00	207.00
tblOffRoadEquipment	HorsePower	208.00	232.00

tblOffRoadEquipment	HorsePower	208.00	585.00
tblOffRoadEquipment	HorsePower	208.00	207.00
tblOffRoadEquipment	HorsePower	208.00	232.00
tblOffRoadEquipment	HorsePower	208.00	585.00
tblOffRoadEquipment	HorsePower	208.00	207.00
tblOffRoadEquipment	HorsePower	208.00	232.00
tblOffRoadEquipment	HorsePower	208.00	232.00
tblOffRoadEquipment	HorsePower	208.00	585.00
tblOffRoadEquipment	HorsePower	208.00	207.00
tblOffRoadEquipment	HorsePower	208.00	232.00
tblOffRoadEquipment	HorsePower	208.00	585.00
tblOffRoadEquipment	HorsePower	208.00	207.00
tblOffRoadEquipment	HorsePower	208.00	232.00
tblOffRoadEquipment	HorsePower	208.00	585.00
tblOffRoadEquipment	HorsePower	208.00	207.00
tblOffRoadEquipment	HorsePower	208.00	232.00
tblOffRoadEquipment	HorsePower	208.00	585.00
tblOffRoadEquipment	HorsePower	208.00	207.00
tblOffRoadEquipment	HorsePower	208.00	232.00
tblOffRoadEquipment	HorsePower	208.00	585.00
tblOffRoadEquipment	HorsePower	208.00	207.00
tblOffRoadEquipment	HorsePower	208.00	232.00
tblOffRoadEquipment	HorsePower	208.00	232.00
tblOffRoadEquipment	HorsePower	208.00	585.00
tblOffRoadEquipment	HorsePower	208.00	207.00
tblOffRoadEquipment	HorsePower	208.00	232.00
tblOffRoadEquipment	HorsePower	208.00	232.00
tblOffRoadEquipment	HorsePower	208.00	232.00

tblOffRoadEquipment	HorsePower	208.00	232.00
tblOffRoadEquipment	HorsePower	208.00	585.00
tblOffRoadEquipment	HorsePower	208.00	207.00
tblOffRoadEquipment	HorsePower	208.00	232.00
tblOffRoadEquipment	HorsePower	208.00	585.00
tblOffRoadEquipment	HorsePower	208.00	207.00
tblOffRoadEquipment	HorsePower	208.00	232.00
tblOffRoadEquipment	HorsePower	208.00	585.00
tblOffRoadEquipment	HorsePower	208.00	207.00
tblOffRoadEquipment	HorsePower	208.00	232.00
tblOffRoadEquipment	HorsePower	208.00	585.00
tblOffRoadEquipment	HorsePower	208.00	207.00
tblOffRoadEquipment	HorsePower	208.00	232.00
tblOffRoadEquipment	HorsePower	208.00	585.00
tblOffRoadEquipment	HorsePower	208.00	207.00
tblOffRoadEquipment	HorsePower	208.00	232.00
tblOffRoadEquipment	HorsePower	208.00	585.00
tblOffRoadEquipment	HorsePower	208.00	207.00
tblOffRoadEquipment	HorsePower	208.00	232.00
tblOffRoadEquipment	HorsePower	208.00	585.00
tblOffRoadEquipment	HorsePower	208.00	207.00
tblOffRoadEquipment	HorsePower	208.00	232.00
tblOffRoadEquipment	HorsePower	208.00	585.00
tblOffRoadEquipment	HorsePower	208.00	207.00
tblOffRoadEquipment	HorsePower	208.00	232.00
tblOffRoadEquipment	HorsePower	208.00	585.00
tblOffRoadEquipment	HorsePower	208.00	207.00
tblOffRoadEquipment	HorsePower	208.00	232.00

tblOffRoadEquipment	HorsePower	208.00	232.00
tblOffRoadEquipment	HorsePower	208.00	585.00
tblOffRoadEquipment	HorsePower	208.00	207.00
tblOffRoadEquipment	HorsePower	208.00	232.00
tblOffRoadEquipment	HorsePower	208.00	585.00
tblOffRoadEquipment	HorsePower	208.00	207.00
tblOffRoadEquipment	HorsePower	208.00	232.00
tblOffRoadEquipment	HorsePower	208.00	585.00
tblOffRoadEquipment	HorsePower	208.00	207.00
tblOffRoadEquipment	HorsePower	208.00	585.00
tblOffRoadEquipment	HorsePower	208.00	207.00
tblOffRoadEquipment	HorsePower	208.00	232.00
tblOffRoadEquipment	HorsePower	162.00	42.00
tblOffRoadEquipment	HorsePower	162.00	42.00
tblOffRoadEquipment	HorsePower	162.00	42.00
tblOffRoadEquipment	HorsePower	162.00	42.00
tblOffRoadEquipment	HorsePower	162.00	42.00
tblOffRoadEquipment	HorsePower	162.00	42.00
tblOffRoadEquipment	HorsePower	162.00	42.00
tblOffRoadEquipment	HorsePower	162.00	176.00
tblOffRoadEquipment	HorsePower	162.00	42.00
tblOffRoadEquipment	HorsePower	162.00	176.00
tblOffRoadEquipment	HorsePower	174.00	259.00
tblOffRoadEquipment	HorsePower	174.00	259.00
tblOffRoadEquipment	HorsePower	174.00	259.00
tblOffRoadEquipment	HorsePower	174.00	259.00
tblOffRoadEquipment	HorsePower	174.00	259.00
tblOffRoadEquipment	HorsePower	174.00	259.00

tblOffRoadEquipment	HorsePower	174.00	259.00
tblOffRoadEquipment	HorsePower	174.00	259.00
tblOffRoadEquipment	HorsePower	174.00	259.00
tblOffRoadEquipment	HorsePower	174.00	259.00
tblOffRoadEquipment	HorsePower	174.00	259.00
tblOffRoadEquipment	HorsePower	174.00	259.00
tblOffRoadEquipment	HorsePower	174.00	259.00
tblOffRoadEquipment	HorsePower	174.00	259.00
tblOffRoadEquipment	HorsePower	174.00	259.00
tblOffRoadEquipment	HorsePower	174.00	259.00
tblOffRoadEquipment	HorsePower	174.00	259.00
tblOffRoadEquipment	HorsePower	174.00	259.00
tblOffRoadEquipment	HorsePower	174.00	259.00
tblOffRoadEquipment	HorsePower	174.00	259.00
tblOffRoadEquipment	HorsePower	174.00	259.00
tblOffRoadEquipment	HorsePower	174.00	259.00
tblOffRoadEquipment	HorsePower	174.00	259.00
tblOffRoadEquipment	HorsePower	174.00	259.00
tblOffRoadEquipment	HorsePower	174.00	259.00
tblOffRoadEquipment	HorsePower	174.00	259.00
tblOffRoadEquipment	HorsePower	174.00	259.00
tblOffRoadEquipment	HorsePower	174.00	259.00
tblOffRoadEquipment	HorsePower	174.00	259.00
tblOffRoadEquipment	HorsePower	174.00	259.00
tblOffRoadEquipment	HorsePower	174.00	259.00
tblOffRoadEquipment	HorsePower	174.00	259.00

tblOffRoadEquipment	HorsePower	174.00	259.00
tblOffRoadEquipment	HorsePower	174.00	259.00
tblOffRoadEquipment	HorsePower	174.00	259.00
tblOffRoadEquipment	HorsePower	174.00	259.00
tblOffRoadEquipment	HorsePower	174.00	259.00
tblOffRoadEquipment	HorsePower	174.00	259.00
tblOffRoadEquipment	HorsePower	174.00	259.00
tblOffRoadEquipment	HorsePower	174.00	259.00
tblOffRoadEquipment	HorsePower	174.00	259.00
tblOffRoadEquipment	HorsePower	171.00	407.00
tblOffRoadEquipment	HorsePower	171.00	130.00
tblOffRoadEquipment	HorsePower	171.00	407.00
tblOffRoadEquipment	HorsePower	171.00	130.00
tblOffRoadEquipment	HorsePower	171.00	407.00
tblOffRoadEquipment	HorsePower	171.00	130.00
tblOffRoadEquipment	HorsePower	171.00	407.00
tblOffRoadEquipment	HorsePower	171.00	130.00
tblOffRoadEquipment	HorsePower	171.00	180.00
tblOffRoadEquipment	HorsePower	171.00	130.00
tblOffRoadEquipment	HorsePower	171.00	407.00
tblOffRoadEquipment	HorsePower	171.00	210.00
tblOffRoadEquipment	HorsePower	171.00	273.00
tblOffRoadEquipment	HorsePower	171.00	50.00
tblOffRoadEquipment	HorsePower	171.00	180.00
tblOffRoadEquipment	HorsePower	171.00	130.00
tblOffRoadEquipment	HorsePower	171.00	407.00
tblOffRoadEquipment	HorsePower	171.00	210.00
tblOffRoadEquipment	HorsePower	171.00	273.00

tblOffRoadEquipment	HorsePower	171.00	50.00
tblOffRoadEquipment	HorsePower	171.00	180.00
tblOffRoadEquipment	HorsePower	171.00	130.00
tblOffRoadEquipment	HorsePower	171.00	407.00
tblOffRoadEquipment	HorsePower	171.00	210.00
tblOffRoadEquipment	HorsePower	171.00	273.00
tblOffRoadEquipment	HorsePower	171.00	50.00
tblOffRoadEquipment	HorsePower	171.00	305.00
tblOffRoadEquipment	HorsePower	171.00	180.00
tblOffRoadEquipment	HorsePower	171.00	130.00
tblOffRoadEquipment	HorsePower	171.00	407.00
tblOffRoadEquipment	HorsePower	171.00	210.00
tblOffRoadEquipment	HorsePower	171.00	273.00
tblOffRoadEquipment	HorsePower	171.00	50.00
tblOffRoadEquipment	HorsePower	171.00	305.00
tblOffRoadEquipment	HorsePower	171.00	180.00
tblOffRoadEquipment	HorsePower	171.00	130.00
tblOffRoadEquipment	HorsePower	171.00	407.00
tblOffRoadEquipment	HorsePower	171.00	210.00
tblOffRoadEquipment	HorsePower	171.00	273.00
tblOffRoadEquipment	HorsePower	171.00	50.00
tblOffRoadEquipment	HorsePower	171.00	305.00
tblOffRoadEquipment	HorsePower	171.00	180.00
tblOffRoadEquipment	HorsePower	171.00	130.00
tblOffRoadEquipment	HorsePower	171.00	407.00
tblOffRoadEquipment	HorsePower	171.00	210.00
tblOffRoadEquipment	HorsePower	171.00	273.00
tblOffRoadEquipment	HorsePower	171.00	50.00

tblOffRoadEquipment	HorsePower	171.00	305.00
tblOffRoadEquipment	HorsePower	171.00	180.00
tblOffRoadEquipment	HorsePower	171.00	130.00
tblOffRoadEquipment	HorsePower	171.00	407.00
tblOffRoadEquipment	HorsePower	171.00	210.00
tblOffRoadEquipment	HorsePower	171.00	273.00
tblOffRoadEquipment	HorsePower	171.00	50.00
tblOffRoadEquipment	HorsePower	171.00	305.00
tblOffRoadEquipment	HorsePower	171.00	407.00
tblOffRoadEquipment	HorsePower	171.00	130.00
tblOffRoadEquipment	HorsePower	171.00	180.00
tblOffRoadEquipment	HorsePower	171.00	130.00
tblOffRoadEquipment	HorsePower	171.00	407.00
tblOffRoadEquipment	HorsePower	171.00	210.00
tblOffRoadEquipment	HorsePower	171.00	273.00
tblOffRoadEquipment	HorsePower	171.00	50.00
tblOffRoadEquipment	HorsePower	171.00	305.00
tblOffRoadEquipment	HorsePower	171.00	180.00
tblOffRoadEquipment	HorsePower	171.00	130.00
tblOffRoadEquipment	HorsePower	171.00	407.00
tblOffRoadEquipment	HorsePower	171.00	210.00
tblOffRoadEquipment	HorsePower	171.00	273.00
tblOffRoadEquipment	HorsePower	171.00	50.00
tblOffRoadEquipment	HorsePower	171.00	305.00
tblOffRoadEquipment	HorsePower	171.00	180.00
tblOffRoadEquipment	HorsePower	171.00	130.00
tblOffRoadEquipment	HorsePower	171.00	407.00
tblOffRoadEquipment	HorsePower	171.00	210.00

tblOffRoadEquipment	HorsePower	171.00	273.00
tblOffRoadEquipment	HorsePower	171.00	50.00
tblOffRoadEquipment	HorsePower	171.00	180.00
tblOffRoadEquipment	HorsePower	171.00	210.00
tblOffRoadEquipment	HorsePower	171.00	273.00
tblOffRoadEquipment	HorsePower	171.00	50.00
tblOffRoadEquipment	HorsePower	171.00	180.00
tblOffRoadEquipment	HorsePower	171.00	210.00
tblOffRoadEquipment	HorsePower	171.00	273.00
tblOffRoadEquipment	HorsePower	171.00	50.00
tblOffRoadEquipment	HorsePower	171.00	180.00
tblOffRoadEquipment	HorsePower	171.00	260.00
tblOffRoadEquipment	HorsePower	171.00	50.00
tblOffRoadEquipment	HorsePower	171.00	210.00
tblOffRoadEquipment	HorsePower	171.00	130.00
tblOffRoadEquipment	HorsePower	171.00	180.00
tblOffRoadEquipment	HorsePower	171.00	273.00
tblOffRoadEquipment	HorsePower	171.00	180.00
tblOffRoadEquipment	HorsePower	171.00	260.00
tblOffRoadEquipment	HorsePower	171.00	50.00
tblOffRoadEquipment	HorsePower	171.00	210.00
tblOffRoadEquipment	HorsePower	171.00	130.00
tblOffRoadEquipment	HorsePower	171.00	180.00
tblOffRoadEquipment	HorsePower	171.00	273.00
tblOffRoadEquipment	HorsePower	171.00	407.00
tblOffRoadEquipment	HorsePower	171.00	180.00
tblOffRoadEquipment	HorsePower	171.00	260.00
tblOffRoadEquipment	HorsePower	171.00	50.00

tblOffRoadEquipment	HorsePower	171.00	210.00
tblOffRoadEquipment	HorsePower	171.00	305.00
tblOffRoadEquipment	HorsePower	171.00	130.00
tblOffRoadEquipment	HorsePower	171.00	180.00
tblOffRoadEquipment	HorsePower	171.00	273.00
tblOffRoadEquipment	HorsePower	171.00	407.00
tblOffRoadEquipment	HorsePower	171.00	180.00
tblOffRoadEquipment	HorsePower	171.00	260.00
tblOffRoadEquipment	HorsePower	171.00	50.00
tblOffRoadEquipment	HorsePower	171.00	210.00
tblOffRoadEquipment	HorsePower	171.00	305.00
tblOffRoadEquipment	HorsePower	171.00	130.00
tblOffRoadEquipment	HorsePower	171.00	180.00
tblOffRoadEquipment	HorsePower	171.00	273.00
tblOffRoadEquipment	HorsePower	171.00	407.00
tblOffRoadEquipment	HorsePower	171.00	180.00
tblOffRoadEquipment	HorsePower	171.00	260.00
tblOffRoadEquipment	HorsePower	171.00	50.00
tblOffRoadEquipment	HorsePower	171.00	210.00
tblOffRoadEquipment	HorsePower	171.00	305.00
tblOffRoadEquipment	HorsePower	171.00	130.00
tblOffRoadEquipment	HorsePower	171.00	180.00
tblOffRoadEquipment	HorsePower	171.00	273.00
tblOffRoadEquipment	HorsePower	171.00	407.00
tblOffRoadEquipment	HorsePower	171.00	130.00
tblOffRoadEquipment	HorsePower	171.00	407.00
tblOffRoadEquipment	HorsePower	171.00	180.00
tblOffRoadEquipment	HorsePower	171.00	260.00

tblOffRoadEquipment	HorsePower	171.00	50.00
tblOffRoadEquipment	HorsePower	171.00	210.00
tblOffRoadEquipment	HorsePower	171.00	305.00
tblOffRoadEquipment	HorsePower	171.00	130.00
tblOffRoadEquipment	HorsePower	171.00	180.00
tblOffRoadEquipment	HorsePower	171.00	273.00
tblOffRoadEquipment	HorsePower	171.00	407.00
tblOffRoadEquipment	HorsePower	171.00	180.00
tblOffRoadEquipment	HorsePower	171.00	260.00
tblOffRoadEquipment	HorsePower	171.00	50.00
tblOffRoadEquipment	HorsePower	171.00	210.00
tblOffRoadEquipment	HorsePower	171.00	305.00
tblOffRoadEquipment	HorsePower	171.00	130.00
tblOffRoadEquipment	HorsePower	171.00	180.00
tblOffRoadEquipment	HorsePower	171.00	273.00
tblOffRoadEquipment	HorsePower	171.00	407.00
tblOffRoadEquipment	HorsePower	171.00	180.00
tblOffRoadEquipment	HorsePower	171.00	260.00
tblOffRoadEquipment	HorsePower	171.00	50.00
tblOffRoadEquipment	HorsePower	171.00	210.00
tblOffRoadEquipment	HorsePower	171.00	305.00
tblOffRoadEquipment	HorsePower	171.00	130.00
tblOffRoadEquipment	HorsePower	171.00	180.00
tblOffRoadEquipment	HorsePower	171.00	273.00
tblOffRoadEquipment	HorsePower	171.00	407.00
tblOffRoadEquipment	HorsePower	171.00	180.00
tblOffRoadEquipment	HorsePower	171.00	260.00
tblOffRoadEquipment	HorsePower	171.00	50.00

tblOffRoadEquipment	HorsePower	171.00	210.00
tblOffRoadEquipment	HorsePower	171.00	305.00
tblOffRoadEquipment	HorsePower	171.00	130.00
tblOffRoadEquipment	HorsePower	171.00	180.00
tblOffRoadEquipment	HorsePower	171.00	273.00
tblOffRoadEquipment	HorsePower	171.00	407.00
tblOffRoadEquipment	HorsePower	171.00	180.00
tblOffRoadEquipment	HorsePower	171.00	260.00
tblOffRoadEquipment	HorsePower	171.00	50.00
tblOffRoadEquipment	HorsePower	171.00	210.00
tblOffRoadEquipment	HorsePower	171.00	130.00
tblOffRoadEquipment	HorsePower	171.00	180.00
tblOffRoadEquipment	HorsePower	171.00	273.00
tblOffRoadEquipment	HorsePower	171.00	180.00
tblOffRoadEquipment	HorsePower	171.00	260.00
tblOffRoadEquipment	HorsePower	171.00	50.00
tblOffRoadEquipment	HorsePower	171.00	210.00
tblOffRoadEquipment	HorsePower	171.00	130.00
tblOffRoadEquipment	HorsePower	171.00	180.00
tblOffRoadEquipment	HorsePower	171.00	273.00
tblOffRoadEquipment	HorsePower	171.00	180.00
tblOffRoadEquipment	HorsePower	171.00	260.00
tblOffRoadEquipment	HorsePower	171.00	50.00
tblOffRoadEquipment	HorsePower	171.00	210.00
tblOffRoadEquipment	HorsePower	171.00	130.00
tblOffRoadEquipment	HorsePower	171.00	180.00
tblOffRoadEquipment	HorsePower	171.00	273.00
tblOffRoadEquipment	HorsePower	171.00	130.00

tblOffRoadEquipment	HorsePower	171.00	180.00
tblOffRoadEquipment	HorsePower	171.00	130.00
tblOffRoadEquipment	HorsePower	171.00	180.00
tblOffRoadEquipment	HorsePower	171.00	130.00
tblOffRoadEquipment	HorsePower	171.00	180.00
tblOffRoadEquipment	HorsePower	171.00	407.00
tblOffRoadEquipment	HorsePower	171.00	130.00
tblOffRoadEquipment	HorsePower	171.00	130.00
tblOffRoadEquipment	HorsePower	171.00	180.00
tblOffRoadEquipment	HorsePower	171.00	210.00
tblOffRoadEquipment	HorsePower	171.00	130.00
tblOffRoadEquipment	HorsePower	171.00	180.00
tblOffRoadEquipment	HorsePower	171.00	210.00
tblOffRoadEquipment	HorsePower	171.00	130.00
tblOffRoadEquipment	HorsePower	171.00	180.00
tblOffRoadEquipment	HorsePower	171.00	210.00
tblOffRoadEquipment	HorsePower	171.00	130.00
tblOffRoadEquipment	HorsePower	171.00	180.00
tblOffRoadEquipment	HorsePower	171.00	407.00
tblOffRoadEquipment	HorsePower	171.00	130.00
tblOffRoadEquipment	HorsePower	171.00	180.00
tblOffRoadEquipment	HorsePower	171.00	407.00
tblOffRoadEquipment	HorsePower	171.00	130.00
tblOffRoadEquipment	HorsePower	171.00	407.00
tblOffRoadEquipment	HorsePower	171.00	130.00
tblOffRoadEquipment	HorsePower	171.00	407.00
tblOffRoadEquipment	HorsePower	171.00	130.00
tblOffRoadEquipment	HorsePower	171.00	180.00

tblOffRoadEquipment	HorsePower	171.00	407.00
tblOffRoadEquipment	HorsePower	171.00	130.00
tblOffRoadEquipment	HorsePower	171.00	130.00
tblOffRoadEquipment	HorsePower	171.00	180.00
tblOffRoadEquipment	HorsePower	171.00	130.00
tblOffRoadEquipment	HorsePower	171.00	180.00
tblOffRoadEquipment	HorsePower	171.00	130.00
tblOffRoadEquipment	HorsePower	171.00	180.00
tblOffRoadEquipment	HorsePower	171.00	210.00
tblOffRoadEquipment	HorsePower	171.00	130.00
tblOffRoadEquipment	HorsePower	171.00	180.00
tblOffRoadEquipment	HorsePower	171.00	210.00
tblOffRoadEquipment	HorsePower	171.00	130.00
tblOffRoadEquipment	HorsePower	171.00	180.00
tblOffRoadEquipment	HorsePower	171.00	210.00
tblOffRoadEquipment	HorsePower	171.00	130.00
tblOffRoadEquipment	HorsePower	171.00	180.00
tblOffRoadEquipment	HorsePower	171.00	130.00
tblOffRoadEquipment	HorsePower	171.00	180.00
tblOffRoadEquipment	HorsePower	171.00	407.00
tblOffRoadEquipment	HorsePower	171.00	130.00
tblOffRoadEquipment	HorsePower	171.00	407.00
tblOffRoadEquipment	HorsePower	171.00	130.00
tblOffRoadEquipment	HorsePower	171.00	407.00
tblOffRoadEquipment	HorsePower	171.00	407.00
tblOffRoadEquipment	HorsePower	171.00	130.00
tblOffRoadEquipment	HorsePower	171.00	180.00
tblOffRoadEquipment	HorsePower	171.00	210.00

tblOffRoadEquipment	HorsePower	171.00	180.00
tblOffRoadEquipment	HorsePower	171.00	210.00
tblOffRoadEquipment	HorsePower	171.00	180.00
tblOffRoadEquipment	HorsePower	171.00	210.00
tblOffRoadEquipment	HorsePower	171.00	180.00
tblOffRoadEquipment	HorsePower	171.00	130.00
tblOffRoadEquipment	HorsePower	171.00	407.00
tblOffRoadEquipment	HorsePower	171.00	130.00
tblOffRoadEquipment	HorsePower	171.00	407.00
tblOffRoadEquipment	HorsePower	171.00	407.00
tblOffRoadEquipment	HorsePower	171.00	130.00
tblOffRoadEquipment	HorsePower	171.00	130.00
tblOffRoadEquipment	HorsePower	171.00	407.00
tblOffRoadEquipment	HorsePower	171.00	130.00
tblOffRoadEquipment	HorsePower	171.00	210.00
tblOffRoadEquipment	HorsePower	171.00	130.00
tblOffRoadEquipment	HorsePower	171.00	210.00
tblOffRoadEquipment	HorsePower	171.00	130.00
tblOffRoadEquipment	HorsePower	171.00	210.00
tblOffRoadEquipment	HorsePower	171.00	180.00
tblOffRoadEquipment	HorsePower	171.00	210.00
tblOffRoadEquipment	HorsePower	171.00	50.00
tblOffRoadEquipment	HorsePower	171.00	305.00
tblOffRoadEquipment	HorsePower	171.00	130.00
tblOffRoadEquipment	HorsePower	171.00	273.00
tblOffRoadEquipment	HorsePower	171.00	180.00
tblOffRoadEquipment	HorsePower	171.00	210.00
tblOffRoadEquipment	HorsePower	171.00	50.00

tblOffRoadEquipment	HorsePower	171.00	305.00
tblOffRoadEquipment	HorsePower	171.00	130.00
tblOffRoadEquipment	HorsePower	171.00	273.00
tblOffRoadEquipment	HorsePower	171.00	180.00
tblOffRoadEquipment	HorsePower	171.00	210.00
tblOffRoadEquipment	HorsePower	171.00	50.00
tblOffRoadEquipment	HorsePower	171.00	305.00
tblOffRoadEquipment	HorsePower	171.00	130.00
tblOffRoadEquipment	HorsePower	171.00	273.00
tblOffRoadEquipment	HorsePower	171.00	180.00
tblOffRoadEquipment	HorsePower	171.00	210.00
tblOffRoadEquipment	HorsePower	171.00	50.00
tblOffRoadEquipment	HorsePower	171.00	305.00
tblOffRoadEquipment	HorsePower	171.00	130.00
tblOffRoadEquipment	HorsePower	171.00	273.00
tblOffRoadEquipment	HorsePower	171.00	407.00
tblOffRoadEquipment	HorsePower	171.00	130.00
tblOffRoadEquipment	HorsePower	171.00	407.00
tblOffRoadEquipment	HorsePower	171.00	180.00
tblOffRoadEquipment	HorsePower	171.00	210.00
tblOffRoadEquipment	HorsePower	171.00	50.00
tblOffRoadEquipment	HorsePower	171.00	305.00
tblOffRoadEquipment	HorsePower	171.00	130.00
tblOffRoadEquipment	HorsePower	171.00	273.00
tblOffRoadEquipment	HorsePower	171.00	407.00
tblOffRoadEquipment	HorsePower	171.00	180.00
tblOffRoadEquipment	HorsePower	171.00	210.00
tblOffRoadEquipment	HorsePower	171.00	50.00

tblOffRoadEquipment	HorsePower	171.00	305.00
tblOffRoadEquipment	HorsePower	171.00	130.00
tblOffRoadEquipment	HorsePower	171.00	273.00
tblOffRoadEquipment	HorsePower	171.00	407.00
tblOffRoadEquipment	HorsePower	171.00	180.00
tblOffRoadEquipment	HorsePower	171.00	210.00
tblOffRoadEquipment	HorsePower	171.00	50.00
tblOffRoadEquipment	HorsePower	171.00	130.00
tblOffRoadEquipment	HorsePower	171.00	273.00
tblOffRoadEquipment	HorsePower	171.00	180.00
tblOffRoadEquipment	HorsePower	171.00	210.00
tblOffRoadEquipment	HorsePower	171.00	50.00
tblOffRoadEquipment	HorsePower	171.00	130.00
tblOffRoadEquipment	HorsePower	171.00	273.00
tblOffRoadEquipment	HorsePower	171.00	180.00
tblOffRoadEquipment	HorsePower	171.00	210.00
tblOffRoadEquipment	HorsePower	171.00	50.00
tblOffRoadEquipment	HorsePower	171.00	273.00
tblOffRoadEquipment	HorsePower	171.00	407.00
tblOffRoadEquipment	HorsePower	171.00	130.00
tblOffRoadEquipment	HorsePower	8.00	3.00
tblOffRoadEquipment	HorsePower	8.00	3.00
tblOffRoadEquipment	HorsePower	8.00	3.00
tblOffRoadEquipment	HorsePower	8.00	3.00
tblOffRoadEquipment	HorsePower	8.00	3.00
tblOffRoadEquipment	HorsePower	8.00	3.00
tblOffRoadEquipment	HorsePower	8.00	3.00
tblOffRoadEquipment	HorsePower	8.00	3.00

tblOffRoadEquipment	HorsePower	8.00	3.00
tblOffRoadEquipment	HorsePower	8.00	3.00
tblOffRoadEquipment	HorsePower	8.00	3.00
tblOffRoadEquipment	HorsePower	8.00	33.00
tblOffRoadEquipment	HorsePower	8.00	14.00
tblOffRoadEquipment	HorsePower	8.00	3.00
tblOffRoadEquipment	HorsePower	8.00	33.00
tblOffRoadEquipment	HorsePower	8.00	14.00
tblOffRoadEquipment	HorsePower	8.00	3.00
tblOffRoadEquipment	HorsePower	8.00	33.00
tblOffRoadEquipment	HorsePower	8.00	14.00
tblOffRoadEquipment	HorsePower	8.00	3.00
tblOffRoadEquipment	HorsePower	8.00	33.00
tblOffRoadEquipment	HorsePower	8.00	14.00
tblOffRoadEquipment	HorsePower	8.00	3.00
tblOffRoadEquipment	HorsePower	8.00	33.00
tblOffRoadEquipment	HorsePower	8.00	14.00
tblOffRoadEquipment	HorsePower	8.00	3.00
tblOffRoadEquipment	HorsePower	8.00	33.00
tblOffRoadEquipment	HorsePower	8.00	14.00
tblOffRoadEquipment	HorsePower	8.00	3.00
tblOffRoadEquipment	HorsePower	8.00	33.00
tblOffRoadEquipment	HorsePower	8.00	14.00
tblOffRoadEquipment	HorsePower	8.00	3.00
tblOffRoadEquipment	HorsePower	8.00	33.00
tblOffRoadEquipment	HorsePower	8.00	14.00
tblOffRoadEquipment	HorsePower	8.00	3.00
tblOffRoadEquipment	HorsePower	8.00	33.00

tblOffRoadEquipment	HorsePower	8.00	14.00
tblOffRoadEquipment	HorsePower	8.00	3.00
tblOffRoadEquipment	HorsePower	8.00	3.00
tblOffRoadEquipment	HorsePower	8.00	3.00
tblOffRoadEquipment	HorsePower	8.00	3.00
tblOffRoadEquipment	HorsePower	8.00	33.00
tblOffRoadEquipment	HorsePower	8.00	3.00
tblOffRoadEquipment	HorsePower	8.00	33.00
tblOffRoadEquipment	HorsePower	8.00	14.00
tblOffRoadEquipment	HorsePower	8.00	3.00
tblOffRoadEquipment	HorsePower	8.00	33.00
tblOffRoadEquipment	HorsePower	8.00	14.00
tblOffRoadEquipment	HorsePower	8.00	3.00
tblOffRoadEquipment	HorsePower	8.00	33.00
tblOffRoadEquipment	HorsePower	8.00	14.00
tblOffRoadEquipment	HorsePower	8.00	3.00
tblOffRoadEquipment	HorsePower	8.00	14.00
tblOffRoadEquipment	HorsePower	8.00	3.00
tblOffRoadEquipment	HorsePower	8.00	14.00
tblOffRoadEquipment	HorsePower	8.00	3.00
tblOffRoadEquipment	HorsePower	8.00	14.00
tblOffRoadEquipment	HorsePower	8.00	3.00
tblOffRoadEquipment	HorsePower	8.00	3.00
tblOffRoadEquipment	HorsePower	8.00	3.00
tblOffRoadEquipment	HorsePower	199.00	125.00
tblOffRoadEquipment	HorsePower	199.00	125.00
tblOffRoadEquipment	HorsePower	199.00	125.00
tblOffRoadEquipment	HorsePower	199.00	125.00

tblOffRoadEquipment	HorsePower	199.00	125.00
tblOffRoadEquipment	HorsePower	199.00	125.00
tblOffRoadEquipment	HorsePower	199.00	125.00
tblOffRoadEquipment	HorsePower	199.00	125.00
tblOffRoadEquipment	HorsePower	199.00	125.00
tblOffRoadEquipment	HorsePower	199.00	125.00
tblOffRoadEquipment	HorsePower	199.00	160.00
tblOffRoadEquipment	HorsePower	199.00	125.00
tblOffRoadEquipment	HorsePower	199.00	160.00
tblOffRoadEquipment	HorsePower	199.00	125.00
tblOffRoadEquipment	HorsePower	199.00	160.00
tblOffRoadEquipment	HorsePower	199.00	125.00
tblOffRoadEquipment	HorsePower	199.00	160.00
tblOffRoadEquipment	HorsePower	199.00	125.00
tblOffRoadEquipment	HorsePower	199.00	160.00
tblOffRoadEquipment	HorsePower	199.00	125.00
tblOffRoadEquipment	HorsePower	199.00	160.00
tblOffRoadEquipment	HorsePower	199.00	200.00
tblOffRoadEquipment	HorsePower	199.00	125.00
tblOffRoadEquipment	HorsePower	199.00	160.00
tblOffRoadEquipment	HorsePower	199.00	200.00
tblOffRoadEquipment	HorsePower	199.00	125.00
tblOffRoadEquipment	HorsePower	199.00	160.00
tblOffRoadEquipment	HorsePower	199.00	125.00
tblOffRoadEquipment	HorsePower	199.00	160.00
tblOffRoadEquipment	HorsePower	199.00	160.00
tblOffRoadEquipment	HorsePower	199.00	160.00
tblOffRoadEquipment	HorsePower	199.00	160.00

tblOffRoadEquipment	HorsePower	199.00	160.00
tblOffRoadEquipment	HorsePower	199.00	160.00
tblOffRoadEquipment	HorsePower	199.00	160.00
tblOffRoadEquipment	HorsePower	199.00	200.00
tblOffRoadEquipment	HorsePower	199.00	200.00
tblOffRoadEquipment	HorsePower	199.00	125.00
tblOffRoadEquipment	HorsePower	199.00	125.00
tblOffRoadEquipment	HorsePower	199.00	200.00
tblOffRoadEquipment	HorsePower	199.00	125.00
tblOffRoadEquipment	HorsePower	199.00	200.00
tblOffRoadEquipment	HorsePower	199.00	125.00
tblOffRoadEquipment	HorsePower	199.00	125.00
tblOffRoadEquipment	HorsePower	199.00	125.00
tblOffRoadEquipment	HorsePower	64.00	45.00
tblOffRoadEquipment	HorsePower	64.00	45.00
tblOffRoadEquipment	HorsePower	64.00	45.00
tblOffRoadEquipment	HorsePower	64.00	45.00
tblOffRoadEquipment	HorsePower	64.00	45.00
tblOffRoadEquipment	HorsePower	64.00	45.00
tblOffRoadEquipment	HorsePower	64.00	45.00
tblOffRoadEquipment	HorsePower	64.00	45.00
tblOffRoadEquipment	HorsePower	64.00	45.00
tblOffRoadEquipment	HorsePower	64.00	45.00
tblOffRoadEquipment	HorsePower	64.00	45.00
tblOffRoadEquipment	HorsePower	64.00	45.00
tblOffRoadEquipment	HorsePower	64.00	45.00
tblOffRoadEquipment	HorsePower	64.00	45.00

tblOffRoadEquipment	HorsePower	64.00	45.00
tblOffRoadEquipment	HorsePower	64.00	45.00
tblOffRoadEquipment	HorsePower	64.00	45.00
tblOffRoadEquipment	HorsePower	64.00	45.00
tblOffRoadEquipment	HorsePower	64.00	45.00
tblOffRoadEquipment	HorsePower	64.00	45.00
tblOffRoadEquipment	HorsePower	64.00	45.00
tblOffRoadEquipment	HorsePower	64.00	45.00
tblOffRoadEquipment	HorsePower	64.00	45.00
tblOffRoadEquipment	HorsePower	64.00	45.00
tblOffRoadEquipment	HorsePower	64.00	45.00
tblOffRoadEquipment	HorsePower	64.00	45.00
tblOffRoadEquipment	HorsePower	64.00	45.00
tblOffRoadEquipment	HorsePower	64.00	45.00
tblOffRoadEquipment	HorsePower	64.00	45.00
tblOffRoadEquipment	HorsePower	64.00	45.00
tblOffRoadEquipment	OffRoadEquipmentUnitAmount	1.00	3.00
tblOffRoadEquipment	OffRoadEquipmentUnitAmount	1.00	3.00
tblOffRoadEquipment	OffRoadEquipmentUnitAmount	1.00	3.00
tblOffRoadEquipment	OffRoadEquipmentUnitAmount	1.00	3.00
tblOffRoadEquipment	OffRoadEquipmentUnitAmount	1.00	5.00
tblOffRoadEquipment	OffRoadEquipmentUnitAmount	1.00	4.00
tblOffRoadEquipment	OffRoadEquipmentUnitAmount	1.00	4.00
tblOffRoadEquipment	OffRoadEquipmentUnitAmount	1.00	2.00
tblOffRoadEquipment	OffRoadEquipmentUnitAmount	1.00	2.00
tblOffRoadEquipment	OffRoadEquipmentUnitAmount	1.00	2.00

tblOffRoadEquipment	OffRoadEquipmentUnitAmount	1.00	2.00
tblOffRoadEquipment	OffRoadEquipmentUnitAmount	1.00	8.00
tblOffRoadEquipment	OffRoadEquipmentUnitAmount	1.00	2.00
tblOffRoadEquipment	OffRoadEquipmentUnitAmount	1.00	8.00
tblOffRoadEquipment	OffRoadEquipmentUnitAmount	1.00	2.00
tblOffRoadEquipment	OffRoadEquipmentUnitAmount	1.00	8.00
tblOffRoadEquipment	OffRoadEquipmentUnitAmount	1.00	2.00
tblOffRoadEquipment	OffRoadEquipmentUnitAmount	1.00	8.00
tblOffRoadEquipment	OffRoadEquipmentUnitAmount	1.00	2.00
tblOffRoadEquipment	OffRoadEquipmentUnitAmount	1.00	8.00
tblOffRoadEquipment	OffRoadEquipmentUnitAmount	1.00	4.00
tblOffRoadEquipment	OffRoadEquipmentUnitAmount	1.00	8.00
tblOffRoadEquipment	OffRoadEquipmentUnitAmount	1.00	4.00
tblOffRoadEquipment	OffRoadEquipmentUnitAmount	1.00	8.00
tblOffRoadEquipment	OffRoadEquipmentUnitAmount	1.00	5.00
tblOffRoadEquipment	OffRoadEquipmentUnitAmount	1.00	7.00
tblOffRoadEquipment	OffRoadEquipmentUnitAmount	1.00	3.00
tblOffRoadEquipment	OffRoadEquipmentUnitAmount	1.00	4.00
tblOffRoadEquipment	OffRoadEquipmentUnitAmount	1.00	2.00
tblOffRoadEquipment	OffRoadEquipmentUnitAmount	1.00	4.00
tblOffRoadEquipment	OffRoadEquipmentUnitAmount	1.00	2.00
tblOffRoadEquipment	OffRoadEquipmentUnitAmount	1.00	2.00
tblOffRoadEquipment	OffRoadEquipmentUnitAmount	1.00	3.00
tblOffRoadEquipment	OffRoadEquipmentUnitAmount	1.00	3.00
tblOffRoadEquipment	OffRoadEquipmentUnitAmount	1.00	3.00
tblOffRoadEquipment	OffRoadEquipmentUnitAmount	1.00	3.00
tblOffRoadEquipment	OffRoadEquipmentUnitAmount	1.00	2.00
tblOffRoadEquipment	OffRoadEquipmentUnitAmount	1.00	2.00

tblOffRoadEquipment	OffRoadEquipmentUnitAmount	1.00	2.00
tblOffRoadEquipment	OffRoadEquipmentUnitAmount	1.00	3.00
tblOffRoadEquipment	OffRoadEquipmentUnitAmount	1.00	3.00
tblOffRoadEquipment	OffRoadEquipmentUnitAmount	1.00	3.00
tblOffRoadEquipment	OffRoadEquipmentUnitAmount	1.00	3.00
tblOffRoadEquipment	OffRoadEquipmentUnitAmount	1.00	3.00
tblOffRoadEquipment	OffRoadEquipmentUnitAmount	1.00	2.00
tblOffRoadEquipment	OffRoadEquipmentUnitAmount	1.00	2.00
tblOffRoadEquipment	OffRoadEquipmentUnitAmount	1.00	2.00
tblOffRoadEquipment	OffRoadEquipmentUnitAmount	1.00	3.00
tblOffRoadEquipment	OffRoadEquipmentUnitAmount	1.00	3.00
tblOffRoadEquipment	OffRoadEquipmentUnitAmount	3.00	2.00
tblOffRoadEquipment	OffRoadEquipmentUnitAmount	3.00	4.00
tblOffRoadEquipment	OffRoadEquipmentUnitAmount	3.00	4.00
tblOffRoadEquipment	OffRoadEquipmentUnitAmount	3.00	4.00
tblOffRoadEquipment	OffRoadEquipmentUnitAmount	3.00	4.00
tblOffRoadEquipment	OffRoadEquipmentUnitAmount	3.00	4.00
tblOffRoadEquipment	OffRoadEquipmentUnitAmount	3.00	4.00
tblOffRoadEquipment	OffRoadEquipmentUnitAmount	3.00	4.00
tblOffRoadEquipment	OffRoadEquipmentUnitAmount	3.00	2.00
tblOffRoadEquipment	OffRoadEquipmentUnitAmount	3.00	2.00
tblOffRoadEquipment	OffRoadEquipmentUnitAmount	3.00	2.00
tblOffRoadEquipment	OffRoadEquipmentUnitAmount	3.00	4.00
tblOffRoadEquipment	OffRoadEquipmentUnitAmount	3.00	4.00
tblOffRoadEquipment	OffRoadEquipmentUnitAmount	3.00	4.00
tblOffRoadEquipment	OffRoadEquipmentUnitAmount	3.00	4.00
tblOffRoadEquipment	OffRoadEquipmentUnitAmount	3.00	4.00
tblOffRoadEquipment	OffRoadEquipmentUnitAmount	3.00	4.00

tblOffRoadEquipment	OffRoadEquipmentUnitAmount	3.00	4.00
tblOffRoadEquipment	OffRoadEquipmentUnitAmount	3.00	2.00
tblOffRoadEquipment	OffRoadEquipmentUnitAmount	3.00	2.00
tblOffRoadEquipment	OffRoadEquipmentUnitAmount	3.00	2.00
tblOffRoadEquipment	OffRoadEquipmentUnitAmount	3.00	2.00
tblOffRoadEquipment	OffRoadEquipmentUnitAmount	3.00	2.00
tblOffRoadEquipment	OffRoadEquipmentUnitAmount	3.00	2.00
tblOffRoadEquipment	OffRoadEquipmentUnitAmount	3.00	2.00
tblOffRoadEquipment	OffRoadEquipmentUnitAmount	3.00	2.00
tblOffRoadEquipment	OffRoadEquipmentUnitAmount	3.00	2.00
tblOffRoadEquipment	OffRoadEquipmentUnitAmount	3.00	2.00
tblOffRoadEquipment	OffRoadEquipmentUnitAmount	1.00	2.00
tblOffRoadEquipment	OffRoadEquipmentUnitAmount	1.00	4.00
tblOffRoadEquipment	OffRoadEquipmentUnitAmount	1.00	4.00
tblOffRoadEquipment	OffRoadEquipmentUnitAmount	1.00	4.00
tblOffRoadEquipment	OffRoadEquipmentUnitAmount	1.00	4.00
tblOffRoadEquipment	OffRoadEquipmentUnitAmount	1.00	4.00
tblOffRoadEquipment	OffRoadEquipmentUnitAmount	1.00	2.00
tblOffRoadEquipment	OffRoadEquipmentUnitAmount	1.00	2.00
tblOffRoadEquipment	OffRoadEquipmentUnitAmount	1.00	2.00
tblOffRoadEquipment	OffRoadEquipmentUnitAmount	1.00	2.00
tblOffRoadEquipment	OffRoadEquipmentUnitAmount	1.00	2.00
tblOffRoadEquipment	OffRoadEquipmentUnitAmount	1.00	4.00
tblOffRoadEquipment	OffRoadEquipmentUnitAmount	1.00	5.00
tblOffRoadEquipment	OffRoadEquipmentUnitAmount	1.00	5.00
tblOffRoadEquipment	OffRoadEquipmentUnitAmount	1.00	5.00
tblOffRoadEquipment	OffRoadEquipmentUnitAmount	1.00	5.00

tblOffRoadEquipment	OffRoadEquipmentUnitAmount	1.00	3.00
tblOffRoadEquipment	OffRoadEquipmentUnitAmount	1.00	3.00
tblOffRoadEquipment	OffRoadEquipmentUnitAmount	1.00	3.00
tblOffRoadEquipment	OffRoadEquipmentUnitAmount	1.00	3.00
tblOffRoadEquipment	OffRoadEquipmentUnitAmount	1.00	2.00
tblOffRoadEquipment	OffRoadEquipmentUnitAmount	1.00	2.00
tblOffRoadEquipment	OffRoadEquipmentUnitAmount	1.00	3.00
tblOffRoadEquipment	OffRoadEquipmentUnitAmount	1.00	3.00
tblOffRoadEquipment	OffRoadEquipmentUnitAmount	1.00	3.00
tblOffRoadEquipment	OffRoadEquipmentUnitAmount	1.00	3.00
tblOffRoadEquipment	OffRoadEquipmentUnitAmount	1.00	2.00
tblOffRoadEquipment	OffRoadEquipmentUnitAmount	1.00	2.00
tblOffRoadEquipment	OffRoadEquipmentUnitAmount	1.00	2.00
tblOffRoadEquipment	OffRoadEquipmentUnitAmount	1.00	2.00
tblOffRoadEquipment	OffRoadEquipmentUnitAmount	1.00	2.00
tblOffRoadEquipment	OffRoadEquipmentUnitAmount	3.00	2.00
tblOffRoadEquipment	OffRoadEquipmentUnitAmount	3.00	2.00
tblOffRoadEquipment	OffRoadEquipmentUnitAmount	3.00	2.00
tblOffRoadEquipment	OffRoadEquipmentUnitAmount	3.00	1.00
tblOffRoadEquipment	OffRoadEquipmentUnitAmount	3.00	1.00
tblOffRoadEquipment	OffRoadEquipmentUnitAmount	3.00	1.00
tblOffRoadEquipment	OffRoadEquipmentUnitAmount	3.00	1.00
tblOffRoadEquipment	OffRoadEquipmentUnitAmount	3.00	1.00
tblOffRoadEquipment	OffRoadEquipmentUnitAmount	3.00	1.00
tblOffRoadEquipment	OffRoadEquipmentUnitAmount	3.00	6.00
tblOffRoadEquipment	OffRoadEquipmentUnitAmount	3.00	9.00
tblOffRoadEquipment	OffRoadEquipmentUnitAmount	3.00	9.00
tblOffRoadEquipment	OffRoadEquipmentUnitAmount	3.00	9.00

tblOffRoadEquipment	OffRoadEquipmentUnitAmount	3.00	8.00
tblOffRoadEquipment	OffRoadEquipmentUnitAmount	3.00	7.00
tblOffRoadEquipment	OffRoadEquipmentUnitAmount	3.00	1.00
tblOffRoadEquipment	OffRoadEquipmentUnitAmount	3.00	7.00
tblOffRoadEquipment	OffRoadEquipmentUnitAmount	3.00	1.00
tblOffRoadEquipment	OffRoadEquipmentUnitAmount	3.00	5.00
tblOffRoadEquipment	OffRoadEquipmentUnitAmount	3.00	5.00
tblOffRoadEquipment	OffRoadEquipmentUnitAmount	3.00	1.00
tblOffRoadEquipment	OffRoadEquipmentUnitAmount	3.00	1.00
tblOffRoadEquipment	OffRoadEquipmentUnitAmount	3.00	1.00
tblOffRoadEquipment	OffRoadEquipmentUnitAmount	3.00	1.00
tblOffRoadEquipment	OffRoadEquipmentUnitAmount	3.00	1.00
tblOffRoadEquipment	OffRoadEquipmentUnitAmount	3.00	1.00
tblOffRoadEquipment	OffRoadEquipmentUnitAmount	3.00	1.00
tblOffRoadEquipment	OffRoadEquipmentUnitAmount	3.00	1.00
tblOffRoadEquipment	OffRoadEquipmentUnitAmount	3.00	1.00
tblOffRoadEquipment	OffRoadEquipmentUnitAmount	3.00	2.00
tblOffRoadEquipment	OffRoadEquipmentUnitAmount	3.00	2.00
tblOffRoadEquipment	OffRoadEquipmentUnitAmount	3.00	1.00
tblOffRoadEquipment	OffRoadEquipmentUnitAmount	3.00	1.00
tblOffRoadEquipment	OffRoadEquipmentUnitAmount	3.00	1.00
tblOffRoadEquipment	OffRoadEquipmentUnitAmount	3.00	1.00
tblOffRoadEquipment	OffRoadEquipmentUnitAmount	3.00	1.00
tblOffRoadEquipment	OffRoadEquipmentUnitAmount	3.00	1.00
tblOffRoadEquipment	OffRoadEquipmentUnitAmount	3.00	1.00
tblOffRoadEquipment	OffRoadEquipmentUnitAmount	3.00	1.00
tblOffRoadEquipment	OffRoadEquipmentUnitAmount	3.00	1.00

tblOffRoadEquipment	OffRoadEquipmentUnitAmount	3.00	1.00
tblOffRoadEquipment	OffRoadEquipmentUnitAmount	1.00	2.00
tblOffRoadEquipment	OffRoadEquipmentUnitAmount	1.00	4.00
tblOffRoadEquipment	OffRoadEquipmentUnitAmount	1.00	4.00
tblOffRoadEquipment	OffRoadEquipmentUnitAmount	1.00	7.00
tblOffRoadEquipment	OffRoadEquipmentUnitAmount	1.00	7.00
tblOffRoadEquipment	OffRoadEquipmentUnitAmount	1.00	7.00
tblOffRoadEquipment	OffRoadEquipmentUnitAmount	1.00	7.00
tblOffRoadEquipment	OffRoadEquipmentUnitAmount	1.00	7.00
tblOffRoadEquipment	OffRoadEquipmentUnitAmount	1.00	4.00
tblOffRoadEquipment	OffRoadEquipmentUnitAmount	1.00	2.00
tblOffRoadEquipment	OffRoadEquipmentUnitAmount	1.00	2.00
tblOffRoadEquipment	OffRoadEquipmentUnitAmount	1.00	14.00
tblOffRoadEquipment	OffRoadEquipmentUnitAmount	1.00	4.00
tblOffRoadEquipment	OffRoadEquipmentUnitAmount	1.00	14.00
tblOffRoadEquipment	OffRoadEquipmentUnitAmount	1.00	4.00
tblOffRoadEquipment	OffRoadEquipmentUnitAmount	1.00	14.00
tblOffRoadEquipment	OffRoadEquipmentUnitAmount	1.00	7.00
tblOffRoadEquipment	OffRoadEquipmentUnitAmount	1.00	14.00
tblOffRoadEquipment	OffRoadEquipmentUnitAmount	1.00	7.00
tblOffRoadEquipment	OffRoadEquipmentUnitAmount	1.00	14.00
tblOffRoadEquipment	OffRoadEquipmentUnitAmount	1.00	7.00
tblOffRoadEquipment	OffRoadEquipmentUnitAmount	1.00	14.00
tblOffRoadEquipment	OffRoadEquipmentUnitAmount	1.00	7.00
tblOffRoadEquipment	OffRoadEquipmentUnitAmount	1.00	14.00
tblOffRoadEquipment	OffRoadEquipmentUnitAmount	1.00	7.00
tblOffRoadEquipment	OffRoadEquipmentUnitAmount	1.00	13.00
tblOffRoadEquipment	OffRoadEquipmentUnitAmount	1.00	4.00

tblOffRoadEquipment	OffRoadEquipmentUnitAmount	1.00	7.00
tblOffRoadEquipment	OffRoadEquipmentUnitAmount	1.00	2.00
tblOffRoadEquipment	OffRoadEquipmentUnitAmount	1.00	7.00
tblOffRoadEquipment	OffRoadEquipmentUnitAmount	1.00	3.00
tblOffRoadEquipment	OffRoadEquipmentUnitAmount	1.00	3.00
tblOffRoadEquipment	OffRoadEquipmentUnitAmount	1.00	3.00
tblOffRoadEquipment	OffRoadEquipmentUnitAmount	1.00	3.00
tblOffRoadEquipment	OffRoadEquipmentUnitAmount	1.00	3.00
tblOffRoadEquipment	OffRoadEquipmentUnitAmount	1.00	2.00
tblOffRoadEquipment	OffRoadEquipmentUnitAmount	1.00	2.00
tblOffRoadEquipment	OffRoadEquipmentUnitAmount	1.00	2.00
tblOffRoadEquipment	OffRoadEquipmentUnitAmount	1.00	3.00
tblOffRoadEquipment	OffRoadEquipmentUnitAmount	1.00	3.00
tblOffRoadEquipment	OffRoadEquipmentUnitAmount	1.00	3.00
tblOffRoadEquipment	OffRoadEquipmentUnitAmount	1.00	2.00
tblOffRoadEquipment	OffRoadEquipmentUnitAmount	1.00	2.00
tblOffRoadEquipment	OffRoadEquipmentUnitAmount	1.00	2.00
tblOffRoadEquipment	OffRoadEquipmentUnitAmount	1.00	2.00
tblOffRoadEquipment	OffRoadEquipmentUnitAmount	1.00	2.00
tblOffRoadEquipment	OffRoadEquipmentUnitAmount	1.00	4.00
tblOffRoadEquipment	OffRoadEquipmentUnitAmount	1.00	4.00
tblOffRoadEquipment	OffRoadEquipmentUnitAmount	1.00	4.00
tblOffRoadEquipment	OffRoadEquipmentUnitAmount	1.00	4.00
tblOffRoadEquipment	OffRoadEquipmentUnitAmount	1.00	4.00
tblOffRoadEquipment	OffRoadEquipmentUnitAmount	1.00	2.00
tblOffRoadEquipment	OffRoadEquipmentUnitAmount	1.00	3.00
tblOffRoadEquipment	UsageHours	7.00	10.00
tblOffRoadEquipment	UsageHours	7.00	10.00

tblOffRoadEquipment	UsageHours	7.00	10.00
tblOffRoadEquipment	UsageHours	7.00	10.00
tblOffRoadEquipment	UsageHours	7.00	10.00
tblOffRoadEquipment	UsageHours	7.00	10.00
tblOffRoadEquipment	UsageHours	7.00	10.00
tblOffRoadEquipment	UsageHours	7.00	10.00
tblOffRoadEquipment	UsageHours	7.00	10.00
tblOffRoadEquipment	UsageHours	7.00	10.00
tblOffRoadEquipment	UsageHours	7.00	10.00
tblOffRoadEquipment	UsageHours	7.00	10.00
tblOffRoadEquipment	UsageHours	7.00	10.00
tblOffRoadEquipment	UsageHours	7.00	10.00
tblOffRoadEquipment	UsageHours	7.00	10.00
tblOffRoadEquipment	UsageHours	7.00	10.00
tblOffRoadEquipment	UsageHours	7.00	10.00
tblOffRoadEquipment	UsageHours	7.00	10.00
tblOffRoadEquipment	UsageHours	7.00	10.00
tblOffRoadEquipment	UsageHours	7.00	10.00
tblOffRoadEquipment	UsageHours	7.00	10.00
tblOffRoadEquipment	UsageHours	7.00	10.00
tblOffRoadEquipment	UsageHours	7.00	10.00
tblOffRoadEquipment	UsageHours	7.00	10.00
tblOffRoadEquipment	UsageHours	7.00	10.00
tblOffRoadEquipment	UsageHours	7.00	10.00
tblOffRoadEquipment	UsageHours	7.00	10.00

tblOffRoadEquipment	UsageHours	7.00	10.00
tblOffRoadEquipment	UsageHours	7.00	10.00
tblOffRoadEquipment	UsageHours	7.00	10.00
tblOffRoadEquipment	UsageHours	7.00	10.00
tblOffRoadEquipment	UsageHours	7.00	10.00
tblOffRoadEquipment	UsageHours	7.00	10.00
tblOffRoadEquipment	UsageHours	7.00	10.00
tblOffRoadEquipment	UsageHours	7.00	10.00
tblOffRoadEquipment	UsageHours	7.00	10.00
tblOffRoadEquipment	UsageHours	7.00	10.00
tblOffRoadEquipment	UsageHours	7.00	10.00
tblOffRoadEquipment	UsageHours	7.00	10.00
tblOffRoadEquipment	UsageHours	7.00	10.00
tblOffRoadEquipment	UsageHours	7.00	10.00
tblOffRoadEquipment	UsageHours	7.00	10.00
tblOffRoadEquipment	UsageHours	7.00	10.00
tblOffRoadEquipment	UsageHours	7.00	10.00
tblOffRoadEquipment	UsageHours	7.00	10.00
tblOffRoadEquipment	UsageHours	7.00	10.00
tblOffRoadEquipment	UsageHours	7.00	10.00
tblOffRoadEquipment	UsageHours	7.00	10.00
tblOffRoadEquipment	UsageHours	7.00	10.00
tblOffRoadEquipment	UsageHours	7.00	10.00
tblOffRoadEquipment	UsageHours	7.00	10.00
tblOffRoadEquipment	UsageHours	7.00	10.00

tblOffRoadEquipment	UsageHours	7.00	10.00
tblOffRoadEquipment	UsageHours	7.00	10.00
tblOffRoadEquipment	UsageHours	7.00	10.00
tblOffRoadEquipment	UsageHours	7.00	10.00
tblOffRoadEquipment	UsageHours	7.00	10.00
tblOffRoadEquipment	UsageHours	7.00	10.00
tblOffRoadEquipment	UsageHours	7.00	10.00
tblOffRoadEquipment	UsageHours	7.00	10.00
tblOffRoadEquipment	UsageHours	7.00	10.00
tblOffRoadEquipment	UsageHours	7.00	10.00
tblOffRoadEquipment	UsageHours	7.00	10.00
tblOffRoadEquipment	UsageHours	7.00	10.00
tblOffRoadEquipment	UsageHours	7.00	10.00
tblOffRoadEquipment	UsageHours	7.00	10.00
tblOffRoadEquipment	UsageHours	7.00	10.00
tblOffRoadEquipment	UsageHours	7.00	10.00
tblOffRoadEquipment	UsageHours	7.00	10.00
tblOffRoadEquipment	UsageHours	7.00	10.00
tblOffRoadEquipment	UsageHours	7.00	10.00
tblOffRoadEquipment	UsageHours	7.00	10.00
tblOffRoadEquipment	UsageHours	7.00	10.00
tblOffRoadEquipment	UsageHours	7.00	10.00
tblOffRoadEquipment	UsageHours	7.00	10.00
tblOffRoadEquipment	UsageHours	7.00	10.00

tblOffRoadEquipment	UsageHours	7.00	10.00
tblOffRoadEquipment	UsageHours	8.00	10.00
tblOffRoadEquipment	UsageHours	8.00	10.00
tblOffRoadEquipment	UsageHours	8.00	10.00
tblOffRoadEquipment	UsageHours	8.00	10.00
tblOffRoadEquipment	UsageHours	8.00	10.00
tblOffRoadEquipment	UsageHours	8.00	10.00
tblOffRoadEquipment	UsageHours	8.00	10.00
tblOffRoadEquipment	UsageHours	8.00	10.00
tblOffRoadEquipment	UsageHours	8.00	10.00
tblOffRoadEquipment	UsageHours	8.00	10.00
tblOffRoadEquipment	UsageHours	8.00	10.00
tblOffRoadEquipment	UsageHours	8.00	10.00
tblOffRoadEquipment	UsageHours	8.00	10.00
tblOffRoadEquipment	UsageHours	8.00	10.00
tblOffRoadEquipment	UsageHours	8.00	10.00
tblOffRoadEquipment	UsageHours	8.00	10.00
tblOffRoadEquipment	UsageHours	8.00	10.00
tblOffRoadEquipment	UsageHours	8.00	10.00
tblOffRoadEquipment	UsageHours	8.00	10.00
tblOffRoadEquipment	UsageHours	8.00	10.00
tblOffRoadEquipment	UsageHours	8.00	10.00
tblOffRoadEquipment	UsageHours	8.00	10.00
tblOffRoadEquipment	UsageHours	8.00	10.00
tblOffRoadEquipment	UsageHours	8.00	10.00
tblOffRoadEquipment	UsageHours	8.00	10.00

tblOffRoadEquipment	UsageHours	8.00	10.00
tblOffRoadEquipment	UsageHours	8.00	10.00
tblOffRoadEquipment	UsageHours	8.00	10.00
tblOffRoadEquipment	UsageHours	8.00	10.00
tblOffRoadEquipment	UsageHours	8.00	10.00
tblOffRoadEquipment	UsageHours	8.00	10.00
tblOffRoadEquipment	UsageHours	8.00	10.00
tblOffRoadEquipment	UsageHours	8.00	10.00
tblOffRoadEquipment	UsageHours	8.00	10.00
tblOffRoadEquipment	UsageHours	8.00	10.00
tblOffRoadEquipment	UsageHours	8.00	10.00
tblOffRoadEquipment	UsageHours	8.00	10.00
tblOffRoadEquipment	UsageHours	8.00	10.00
tblOffRoadEquipment	UsageHours	8.00	10.00
tblOffRoadEquipment	UsageHours	8.00	10.00
tblOffRoadEquipment	UsageHours	8.00	10.00
tblOffRoadEquipment	UsageHours	8.00	10.00
tblOffRoadEquipment	UsageHours	8.00	10.00
tblOffRoadEquipment	UsageHours	8.00	10.00
tblOffRoadEquipment	UsageHours	8.00	10.00
tblOffRoadEquipment	UsageHours	8.00	10.00
tblOffRoadEquipment	UsageHours	8.00	10.00
tblOffRoadEquipment	UsageHours	8.00	10.00
tblOffRoadEquipment	UsageHours	8.00	10.00
tblOffRoadEquipment	UsageHours	8.00	10.00

tblOffRoadEquipment	UsageHours	8.00	10.00
tblOffRoadEquipment	UsageHours	8.00	10.00
tblOffRoadEquipment	UsageHours	8.00	10.00
tblOffRoadEquipment	UsageHours	8.00	10.00
tblOffRoadEquipment	UsageHours	8.00	10.00
tblOffRoadEquipment	UsageHours	8.00	10.00
tblOffRoadEquipment	UsageHours	8.00	10.00
tblOffRoadEquipment	UsageHours	8.00	10.00
tblOffRoadEquipment	UsageHours	8.00	10.00
tblOffRoadEquipment	UsageHours	8.00	10.00
tblOffRoadEquipment	UsageHours	8.00	10.00
tblOffRoadEquipment	UsageHours	8.00	10.00
tblOffRoadEquipment	UsageHours	8.00	10.00
tblOffRoadEquipment	UsageHours	8.00	10.00
tblOffRoadEquipment	UsageHours	8.00	10.00
tblOffRoadEquipment	UsageHours	8.00	10.00
tblOffRoadEquipment	UsageHours	8.00	10.00
tblOffRoadEquipment	UsageHours	8.00	10.00
tblOffRoadEquipment	UsageHours	8.00	10.00
tblOffRoadEquipment	UsageHours	8.00	10.00
tblOffRoadEquipment	UsageHours	8.00	10.00
tblOffRoadEquipment	UsageHours	8.00	10.00
tblOffRoadEquipment	UsageHours	8.00	10.00
tblOffRoadEquipment	UsageHours	7.00	10.00
tblOffRoadEquipment	UsageHours	7.00	10.00

tblOffRoadEquipment	UsageHours	7.00	10.00
tblOffRoadEquipment	UsageHours	7.00	10.00
tblOffRoadEquipment	UsageHours	7.00	10.00
tblOffRoadEquipment	UsageHours	7.00	10.00
tblOffRoadEquipment	UsageHours	7.00	10.00
tblOffRoadEquipment	UsageHours	7.00	10.00
tblOffRoadEquipment	UsageHours	7.00	10.00
tblOffRoadEquipment	UsageHours	7.00	10.00
tblOffRoadEquipment	UsageHours	7.00	10.00
tblOffRoadEquipment	UsageHours	7.00	10.00
tblOffRoadEquipment	UsageHours	7.00	10.00
tblOffRoadEquipment	UsageHours	7.00	10.00
tblOffRoadEquipment	UsageHours	7.00	10.00
tblOffRoadEquipment	UsageHours	7.00	10.00
tblOffRoadEquipment	UsageHours	7.00	10.00
tblOffRoadEquipment	UsageHours	7.00	10.00
tblOffRoadEquipment	UsageHours	7.00	10.00
tblOffRoadEquipment	UsageHours	7.00	10.00
tblOffRoadEquipment	UsageHours	7.00	10.00
tblOffRoadEquipment	UsageHours	7.00	10.00
tblOffRoadEquipment	UsageHours	7.00	10.00
tblOffRoadEquipment	UsageHours	7.00	10.00
tblOffRoadEquipment	UsageHours	7.00	10.00
tblOffRoadEquipment	UsageHours	7.00	10.00
tblOffRoadEquipment	UsageHours	7.00	10.00

tblOffRoadEquipment	UsageHours	7.00	10.00
tblOffRoadEquipment	UsageHours	7.00	10.00
tblOffRoadEquipment	UsageHours	7.00	10.00
tblOffRoadEquipment	UsageHours	7.00	10.00
tblOffRoadEquipment	UsageHours	7.00	10.00
tblOffRoadEquipment	UsageHours	7.00	10.00
tblOffRoadEquipment	UsageHours	7.00	10.00
tblOffRoadEquipment	UsageHours	7.00	10.00
tblOffRoadEquipment	UsageHours	7.00	10.00
tblOffRoadEquipment	UsageHours	7.00	10.00
tblOffRoadEquipment	UsageHours	7.00	10.00
tblOffRoadEquipment	UsageHours	7.00	10.00
tblOffRoadEquipment	UsageHours	7.00	10.00
tblOffRoadEquipment	UsageHours	7.00	10.00
tblOffRoadEquipment	UsageHours	7.00	10.00
tblOffRoadEquipment	UsageHours	8.00	10.00
tblOffRoadEquipment	UsageHours	8.00	10.00
tblOffRoadEquipment	UsageHours	8.00	10.00
tblOffRoadEquipment	UsageHours	8.00	10.00
tblOffRoadEquipment	UsageHours	8.00	10.00
tblOffRoadEquipment	UsageHours	8.00	10.00
tblOffRoadEquipment	UsageHours	8.00	10.00
tblOffRoadEquipment	UsageHours	8.00	10.00
tblOffRoadEquipment	UsageHours	8.00	10.00
tblOffRoadEquipment	UsageHours	8.00	10.00
tblOffRoadEquipment	UsageHours	8.00	10.00
tblOffRoadEquipment	UsageHours	8.00	10.00

tblOffRoadEquipment	UsageHours	8.00	10.00
tblOffRoadEquipment	UsageHours	8.00	10.00
tblOffRoadEquipment	UsageHours	8.00	10.00
tblOffRoadEquipment	UsageHours	8.00	10.00
tblOffRoadEquipment	UsageHours	8.00	10.00
tblOffRoadEquipment	UsageHours	8.00	10.00
tblOffRoadEquipment	UsageHours	8.00	10.00
tblOffRoadEquipment	UsageHours	8.00	10.00
tblOffRoadEquipment	UsageHours	8.00	10.00
tblOffRoadEquipment	UsageHours	8.00	10.00
tblOffRoadEquipment	UsageHours	8.00	10.00
tblOffRoadEquipment	UsageHours	8.00	10.00
tblOffRoadEquipment	UsageHours	8.00	10.00
tblOffRoadEquipment	UsageHours	8.00	10.00
tblOffRoadEquipment	UsageHours	8.00	10.00
tblOffRoadEquipment	UsageHours	8.00	10.00
tblOffRoadEquipment	UsageHours	8.00	10.00
tblOffRoadEquipment	UsageHours	8.00	10.00
tblOffRoadEquipment	UsageHours	8.00	10.00
tblOffRoadEquipment	UsageHours	8.00	10.00
tblOffRoadEquipment	UsageHours	8.00	10.00
tblOffRoadEquipment	UsageHours	8.00	10.00
tblOffRoadEquipment	UsageHours	8.00	10.00
tblOffRoadEquipment	UsageHours	8.00	10.00
tblOffRoadEquipment	UsageHours	8.00	10.00

tblOffRoadEquipment	UsageHours	8.00	10.00
tblOffRoadEquipment	UsageHours	8.00	10.00
tblOffRoadEquipment	UsageHours	8.00	10.00
tblOffRoadEquipment	UsageHours	8.00	10.00
tblOffRoadEquipment	UsageHours	8.00	10.00
tblOffRoadEquipment	UsageHours	8.00	10.00
tblOffRoadEquipment	UsageHours	8.00	10.00
tblOffRoadEquipment	UsageHours	8.00	10.00
tblOffRoadEquipment	UsageHours	8.00	10.00
tblOffRoadEquipment	UsageHours	8.00	10.00
tblOffRoadEquipment	UsageHours	8.00	10.00
tblOffRoadEquipment	UsageHours	8.00	10.00
tblOffRoadEquipment	UsageHours	8.00	10.00
tblOffRoadEquipment	UsageHours	8.00	10.00
tblOffRoadEquipment	UsageHours	8.00	10.00
tblOffRoadEquipment	UsageHours	8.00	10.00
tblProjectCharacteristics	OperationalYear	2014	2035
tblProjectCharacteristics	UrbanizationLevel	Urban	Rural

2.0 Emissions Summary

2.1 Overall Construction

Unmitigated Construction

	ROG	NOx	CO	SO2	Fugitive PM10	Exhaust PM10	PM10 Total	Fugitive PM2.5	Exhaust PM2.5	PM2.5 Total	Bio- CO2	NBio- CO2	Total CO2	CH4	N2O	CO2e
Year	tons/yr										MT/yr					
2017	1.8842	23.7156	9.4862	0.0236	0.0000	0.9517	0.9517	0.0000	0.8766	0.8766	0.0000	2,178.7046	2,178.7046	0.6624	0.0000	2,192.6148
2018	3.8143	37.2093	20.5538	0.0446	0.0000	1.7128	1.7128	0.0000	1.5922	1.5922	0.0000	3,983.2616	3,983.2616	1.1937	0.0000	4,008.3290
2019	5.4166	49.1911	31.7251	0.0607	0.0000	2.3907	2.3907	0.0000	2.2313	2.2313	0.0000	5,283.8798	5,283.8798	1.5526	0.0000	5,316.4854
2020	0.7471	8.1057	4.2386	0.0102	0.0000	0.3444	0.3444	0.0000	0.3187	0.3187	0.0000	882.2343	882.2343	0.2766	0.0000	888.0425
2021	0.6571	7.0487	4.0251	9.5700e-003	0.0000	0.2979	0.2979	0.0000	0.2755	0.2755	0.0000	832.0075	832.0075	0.2599	0.0000	837.4661
2022	0.2760	3.0912	1.6047	5.0600e-003	0.0000	0.1215	0.1215	0.0000	0.1118	0.1118	0.0000	444.5558	444.5558	0.1438	0.0000	447.5752
2023	1.1100	9.4125	8.3773	0.0179	0.0000	0.4187	0.4187	0.0000	0.3909	0.3909	0.0000	1,525.8548	1,525.8548	0.4458	0.0000	1,535.2171
Total	**13.9053**	**137.7741**	**80.0108**	**0.1715**	**0.0000**	**6.2377**	**6.2377**	**0.0000**	**5.7970**	**5.7970**	**0.0000**	**15,130.4984**	**15,130.4984**	**4.5348**	**0.0000**	**15,225.7301**

2.1 Overall Construction

Mitigated Construction

	ROG	NOx	CO	SO2	Fugitive PM10	Exhaust PM10	PM10 Total	Fugitive PM2.5	Exhaust PM2.5	PM2.5 Total	Bio- CO2	NBio- CO2	Total CO2	CH4	N2O	CO2e
Year	tons/yr										MT/yr					
2017	0.2850	1.2349	11.4381	0.0236	0.0000	0.0380	0.0380	0.0000	0.0380	0.0380	0.0000	2,178.7020	2,178.7020	0.6624	0.0000	2,192.6122
2018	0.5981	5.5963	22.6070	0.0446	0.0000	0.0689	0.0689	0.0000	0.0689	0.0689	0.0000	3,983.2568	3,983.2568	1.1937	0.0000	4,008.3243
2019	0.8345	8.9206	33.8015	0.0607	0.0000	0.0922	0.0922	0.0000	0.0922	0.0922	0.0000	5,283.8735	5,283.8735	1.5526	0.0000	5,316.4790
2020	0.1289	0.8052	5.3015	0.0102	0.0000	0.0163	0.0163	0.0000	0.0163	0.0163	0.0000	882.2333	882.2333	0.2766	0.0000	888.0414
2021	0.1226	0.7985	5.1075	9.5700e-003	0.0000	0.0154	0.0154	0.0000	0.0154	0.0154	0.0000	832.0065	832.0065	0.2599	0.0000	837.4651
2022	0.0622	0.2696	2.4237	5.0600e-003	0.0000	8.2900e-003	8.2900e-003	0.0000	8.2900e-003	8.2900e-003	0.0000	444.5553	444.5553	0.1438	0.0000	447.5747
2023	0.2396	2.5532	9.5859	0.0179	0.0000	0.0265	0.0265	0.0000	0.0265	0.0265	0.0000	1,525.8530	1,525.8530	0.4458	0.0000	1,535.2152
Total	**2.2708**	**20.1783**	**90.2651**	**0.1715**	**0.0000**	**0.2656**	**0.2656**	**0.0000**	**0.2656**	**0.2656**	**0.0000**	**15,130.4804**	**15,130.4804**	**4.5348**	**0.0000**	**15,225.7120**

	ROG	NOx	CO	SO2	Fugitive PM10	Exhaust PM10	PM10 Total	Fugitive PM2.5	Exhaust PM2.5	PM2.5 Total	Bio- CO2	NBio-CO2	Total CO2	CH4	N20	CO2e
Percent Reduction	**83.67**	**85.35**	**-12.82**	**0.00**	**0.00**	**95.74**	**95.74**	**0.00**	**95.42**	**95.42**	**0.00**	**0.00**	**0.00**	**0.00**	**0.00**	**0.00**

2.2 Overall Operational

Unmitigated Operational

	ROG	NOx	CO	SO2	Fugitive PM10	Exhaust PM10	PM10 Total	Fugitive PM2.5	Exhaust PM2.5	PM2.5 Total	Bio- CO2	NBio- CO2	Total CO2	CH4	N2O	CO2e
Category	tons/yr										MT/yr					
Area	0.0000					0.0000	0.0000		0.0000	0.0000	0.0000	0.0000	0.0000	0.0000	0.0000	0.0000
Energy	0.0000	0.0000	0.0000	0.0000		0.0000	0.0000		0.0000	0.0000	0.0000	0.0000	0.0000	0.0000	0.0000	0.0000
Mobile	0.0000	0.0000	0.0000	0.0000	0.0000	0.0000	0.0000	0.0000	0.0000	0.0000	0.0000	0.0000	0.0000	0.0000	0.0000	0.0000
Waste						0.0000	0.0000		0.0000	0.0000	0.0000	0.0000	0.0000	0.0000	0.0000	0.0000
Water						0.0000	0.0000		0.0000	0.0000	0.0000	0.0000	0.0000	0.0000	0.0000	0.0000
Total	**0.0000**	**0.0000**	**0.0000**	**0.0000**	**0.0000**	**0.0000**	**0.0000**	**0.0000**	**0.0000**	**0.0000**	**0.0000**	**0.0000**	**0.0000**	**0.0000**	**0.0000**	**0.0000**

2.2 Overall Operational

Mitigated Operational

	ROG	NOx	CO	SO2	Fugitive PM10	Exhaust PM10	PM10 Total	Fugitive PM2.5	Exhaust PM2.5	PM2.5 Total	Bio- CO2	NBio- CO2	Total CO2	CH4	N2O	CO2e
Category	tons/yr										MT/yr					
Area	0.0000					0.0000	0.0000		0.0000	0.0000	0.0000	0.0000	0.0000	0.0000	0.0000	0.0000
Energy	0.0000	0.0000	0.0000	0.0000		0.0000	0.0000		0.0000	0.0000	0.0000	0.0000	0.0000	0.0000	0.0000	0.0000
Mobile	0.0000	0.0000	0.0000	0.0000	0.0000	0.0000	0.0000	0.0000	0.0000	0.0000	0.0000	0.0000	0.0000	0.0000	0.0000	0.0000
Waste						0.0000	0.0000		0.0000	0.0000	0.0000	0.0000	0.0000	0.0000	0.0000	0.0000
Water						0.0000	0.0000		0.0000	0.0000	0.0000	0.0000	0.0000	0.0000	0.0000	0.0000
Total	**0.0000**	**0.0000**	**0.0000**	**0.0000**	**0.0000**	**0.0000**	**0.0000**	**0.0000**	**0.0000**	**0.0000**	**0.0000**	**0.0000**	**0.0000**	**0.0000**	**0.0000**	**0.0000**

	ROG	**NOx**	**CO**	**SO2**	**Fugitive PM10**	**Exhaust PM10**	**PM10 Total**	**Fugitive PM2.5**	**Exhaust PM2.5**	**PM2.5 Total**	**Bio- CO2**	**NBio-CO2**	**Total CO2**	**CH4**	**N20**	**CO2e**
Percent Reduction	**0.00**	**0.00**	**0.00**	**0.00**	**0.00**	**0.00**	**0.00**	**0.00**	**0.00**	**0.00**	**0.00**	**0.00**	**0.00**	**0.00**	**0.00**	**0.00**

3.0 Construction Detail

Construction Phase

Phase Number	Phase Name	Phase Type	Start Date	End Date	Num Days Week	Num Days	Phase Description
1	Year -3 Month 1	Building Construction	1/1/2017	1/31/2017	6	26	
2	Year -3 Month 2	Building Construction	2/1/2017	2/28/2017	6	24	
3	Year -3 Month 3	Building Construction	3/1/2017	3/31/2017	6	27	

4	Year -3 Month 4	Building Construction	4/1/2017	4/29/2017	6	25	
5	Year -3 Month 5	Building Construction	5/1/2017	5/31/2017	6	27	
6	Year -3 Month 6	Building Construction	6/1/2017	6/30/2017	6	26	
7	Year -3 Month 7	Building Construction	7/1/2017	7/31/2017	6	26	
8	Year -3 Month 8	Building Construction	8/1/2017	8/31/2017	6	27	
9	Year -3 Month 9	Building Construction	9/1/2017	9/30/2017	6	25	
10	Year -3 Month 10	Building Construction	10/1/2017	10/31/2017	6	27	
11	Year -3 Month 11	Building Construction	11/1/2017	11/30/2017	6	26	
12	Year -3 Month 12	Building Construction	12/1/2017	12/31/2017	6	26	
13	Year -2 Month 1	Building Construction	1/1/2018	1/31/2018	6	27	
14	Year -2 Month 2	Building Construction	2/1/2018	2/28/2018	6	24	
15	Year -2 Month 3	Building Construction	3/1/2018	3/31/2018	6	27	
16	Year -2 Month 4	Building Construction	4/1/2018	4/30/2018	6	25	
17	Year -2 Month 5	Building Construction	5/1/2018	5/31/2018	6	27	
18	Year -2 Month 6	Building Construction	6/1/2018	6/30/2018	6	26	
19	Year -2 Month 7	Building Construction	7/1/2018	7/31/2018	6	26	
20	Year -2 Month 8	Building Construction	8/1/2018	8/31/2018	6	27	
21	Year -2 Month 9	Building Construction	9/1/2018	9/29/2018	6	25	
22	Year -2 Month 10	Building Construction	10/1/2018	10/31/2018	6	27	
23	Year -2 Month 11	Building Construction	11/1/2018	11/30/2018	6	26	
24	Year -2 Month 12	Building Construction	12/1/2018	12/31/2018	6	26	
25	Year -1 Month 1	Building Construction	1/1/2019	1/31/2019	6	27	
26	Year -1 Month 2	Building Construction	2/1/2019	2/28/2019	6	24	
27	Year -1 Month 3	Building Construction	3/1/2019	3/30/2019	6	26	
28	Year -1 Month 4	Building Construction	4/1/2019	4/30/2019	6	26	
29	Year -1 Month 5	Building Construction	5/1/2019	5/31/2019	6	27	
30	Year -1 Month 6	Building Construction	6/1/2019	6/29/2019	6	25	
31	Year -1 Month 7	Building Construction	7/1/2019	7/31/2019	6	27	

32	Year -1 Month 8	Building Construction	8/1/2019	8/31/2019	6	27	
33	Year -1 Month 9	Building Construction	9/1/2019	9/30/2019	6	25	
34	Year -1 Month 10	Building Construction	10/1/2019	10/31/2019	6	27	
35	Year -1 Month 11	Building Construction	11/1/2019	11/30/2019	6	26	
36	Year -1 Month 12	Building Construction	12/1/2019	12/31/2019	6	26	
37	Year 1 Month 1	Building Construction	1/1/2020	1/31/2020	6	27	
38	Year 1 Month 2	Building Construction	2/1/2020	2/28/2020	6	24	
39	Year 1 Month 3	Building Construction	3/1/2020	3/31/2020	6	26	
40	Year 1 Month 4	Building Construction	4/1/2020	4/30/2020	6	26	
41	Year 1 Month 5	Building Construction	5/1/2020	5/30/2020	6	26	
42	Year 1 Month 6	Building Construction	6/1/2020	6/30/2020	6	26	
43	Year 1 Month 7	Building Construction	7/1/2020	7/31/2020	6	27	
44	Year 1 Month 8	Building Construction	8/1/2020	8/31/2020	6	26	
45	Year 1 Month 9	Building Construction	9/1/2020	9/30/2020	6	26	
46	Year 1 Month 10	Building Construction	10/1/2020	10/31/2020	6	27	
47	Year 1 Month 11	Building Construction	11/1/2020	11/30/2020	6	25	
48	Year 1 Month 12	Building Construction	12/1/2020	12/31/2020	6	27	
49	Year 2 Month 1	Building Construction	1/1/2021	1/30/2021	6	26	
50	Year 2 Month 2	Building Construction	2/1/2021	2/27/2021	6	24	
51	Year 2 Month 3	Building Construction	3/1/2021	3/31/2021	6	27	
52	Year 2 Month 4	Building Construction	4/1/2021	4/30/2021	6	26	
53	Year 2 Month 5	Building Construction	5/1/2021	5/31/2021	6	26	
54	Year 2 Month 6	Building Construction	6/1/2021	6/30/2021	6	26	
55	Year 2 Month 7	Building Construction	7/1/2021	7/31/2021	6	27	
56	Year 2 Month 8	Building Construction	8/1/2021	8/31/2021	6	26	
57	Year 2 Month 9	Building Construction	9/1/2021	9/30/2021	6	26	
58	Year 2 Month 10	Building Construction	10/1/2021	10/30/2021	6	26	
59	Year 2 Month 11	Building Construction	11/1/2021	11/30/2021	6	26	

60	Year 2 Month 12	Building Construction	12/1/2021	12/31/2021	6	27	
61	Year 3 Month 1	Building Construction	1/1/2022	1/31/2022	6	26	
62	Year 3 Month 2	Building Construction	2/1/2022	2/28/2022	6	24	
63	Year 3 Month 3	Building Construction	3/1/2022	3/31/2022	6	27	
64	Year 3 Month 4	Building Construction	4/1/2022	4/30/2022	6	26	
65	Year 3 Month 5	Building Construction	5/1/2022	5/31/2022	6	26	
66	Year 3 Month 6	Building Construction	6/1/2022	6/30/2022	6	26	
67	Year 3 Month 7	Building Construction	7/1/2022	7/30/2022	6	26	
68	Year 3 Month 8	Building Construction	8/1/2022	8/31/2022	6	27	
69	Year 3 Month 9	Building Construction	9/1/2022	9/30/2022	6	26	
70	Year 3 Month 10	Building Construction	10/1/2022	10/31/2022	6	26	
71	Year 3 Month 11	Building Construction	11/1/2022	11/30/2022	6	26	
72	Year 3 Month 12	Building Construction	12/1/2022	12/31/2022	6	27	
73	Year 4 Month 1	Building Construction	1/1/2023	1/31/2023	6	26	
74	Year 4 Month 2	Building Construction	2/1/2023	2/28/2023	6	24	
75	Year 4 Month 3	Building Construction	3/1/2023	3/31/2023	6	27	
76	Year 4 Month 4	Building Construction	4/1/2023	4/29/2023	6	25	
77	Year 4 Month 5	Building Construction	5/1/2023	5/31/2023	6	27	
78	Year 4 Month 6	Building Construction	6/1/2023	6/30/2023	6	26	
79	Year 4 Month 7	Building Construction	7/1/2023	7/31/2023	6	26	
80	Year 4 Month 8	Building Construction	8/1/2023	8/31/2023	6	27	
81	Year 4 Month 9	Building Construction	9/1/2023	9/30/2023	6	26	
82	Year 4 Month 10	Building Construction	10/1/2023	10/31/2023	6	26	
83	Year 4 Month 11	Building Construction	11/1/2023	11/30/2023	6	26	
84	Year 4 Month 12	Building Construction	12/1/2023	12/30/2023	6	26	

Acres of Grading (Site Preparation Phase): 0

Acres of Grading (Grading Phase): 0

Acres of Paving: 0

Residential Indoor: 0; Residential Outdoor: 0; Non-Residential Indoor: 0; Non-Residential Outdoor: 0 (Architectural Coating – sqft)

OffRoad Equipment

Phase Name	Offroad Equipment Type	Amount	Usage Hours	Horse Power	Load Factor
Year -3 Month 1	Crawler Tractors	1	10.00	585	0.43
Year -3 Month 1	Crawler Tractors	1	10.00	207	0.43
Year -3 Month 1	Crawler Tractors	4	10.00	232	0.43
Year -3 Month 1	Generator Sets	1	10.00	18	0.74
Year -3 Month 1	Graders	1	10.00	259	0.41
Year -3 Month 1	Other Construction Equipment	1	10.00	407	0.42
Year -3 Month 1	Other Construction Equipment	3	10.00	130	0.42
Year -3 Month 2	Crawler Tractors	1	10.00	585	0.43
Year -3 Month 2	Crawler Tractors	1	10.00	207	0.43
Year -3 Month 2	Crawler Tractors	4	10.00	232	0.43
Year -3 Month 2	Generator Sets	1	10.00	18	0.74
Year -3 Month 2	Graders	1	10.00	259	0.41
Year -3 Month 2	Other Construction Equipment	1	10.00	407	0.42
Year -3 Month 2	Other Construction Equipment	3	10.00	130	0.42
Year -3 Month 3	Crawler Tractors	1	10.00	585	0.43
Year -3 Month 3	Crawler Tractors	1	10.00	207	0.43
Year -3 Month 3	Crawler Tractors	4	10.00	232	0.43
Year -3 Month 3	Generator Sets	1	10.00	18	0.74
Year -3 Month 3	Graders	1	10.00	259	0.41
Year -3 Month 3	Other Construction Equipment	1	10.00	407	0.42
Year -3 Month 3	Other Construction Equipment	3	10.00	130	0.42
Year -3 Month 4	Crawler Tractors	1	10.00	585	0.43
Year -3 Month 4	Crawler Tractors	1	10.00	207	0.43

Year -3 Month 4	Crawler Tractors	4	10.00	232	0.43
Year -3 Month 4	Generator Sets	1	10.00	18	0.74
Year -3 Month 4	Graders	1	10.00	259	0.41
Year -3 Month 4	Other Construction Equipment	1	10.00	407	0.42
Year -3 Month 4	Other Construction Equipment	3	10.00	130	0.42
Year -3 Month 5	Crawler Tractors	1	10.00	585	0.43
Year -3 Month 5	Crawler Tractors	1	10.00	207	0.43
Year -3 Month 5	Crawler Tractors	4	10.00	232	0.43
Year -3 Month 5	Generator Sets	1	10.00	18	0.74
Year -3 Month 5	Graders	1	10.00	259	0.41
Year -3 Month 5	Other Construction Equipment	1	10.00	407	0.42
Year -3 Month 5	Other Construction Equipment	3	10.00	130	0.42
Year -3 Month 6	Crawler Tractors	1	10.00	585	0.43
Year -3 Month 6	Crawler Tractors	1	10.00	207	0.43
Year -3 Month 6	Crawler Tractors	4	10.00	232	0.43
Year -3 Month 6	Generator Sets	1	10.00	18	0.74
Year -3 Month 6	Graders	1	10.00	259	0.41
Year -3 Month 6	Other Construction Equipment	1	10.00	407	0.42
Year -3 Month 6	Other Construction Equipment	3	10.00	130	0.42
Year -3 Month 7	Crawler Tractors	2	10.00	585	0.43
Year -3 Month 7	Crawler Tractors	2	10.00	207	0.43
Year -3 Month 7	Crawler Tractors	8	10.00	232	0.43
Year -3 Month 7	Generator Sets	2	10.00	18	0.74
Year -3 Month 7	Graders	2	10.00	259	0.41
Year -3 Month 7	Other Construction Equipment	2	10.00	407	0.42
Year -3 Month 7	Other Construction Equipment	6	10.00	130	0.42
Year -3 Month 8	Crawler Tractors	2	10.00	585	0.43
Year -3 Month 8	Crawler Tractors	2	10.00	207	0.43

Year -3 Month 8	Crawler Tractors	8	10.00	232	0.43
Year -3 Month 8	Generator Sets	2	10.00	18	0.74
Year -3 Month 8	Graders	2	10.00	259	0.41
Year -3 Month 8	Other Construction Equipment	2	10.00	407	0.42
Year -3 Month 8	Other Construction Equipment	6	10.00	130	0.42
Year -3 Month 9	Crawler Tractors	1	10.00	585	0.43
Year -3 Month 9	Crawler Tractors	1	10.00	207	0.43
Year -3 Month 9	Crawler Tractors	4	10.00	232	0.43
Year -3 Month 9	Generator Sets	1	10.00	18	0.74
Year -3 Month 9	Graders	1	10.00	259	0.41
Year -3 Month 9	Other Construction Equipment	1	10.00	407	0.42
Year -3 Month 9	Other Construction Equipment	3	10.00	130	0.42
Year -3 Month 10	Crawler Tractors	1	10.00	585	0.43
Year -3 Month 10	Crawler Tractors	1	10.00	207	0.43
Year -3 Month 10	Crawler Tractors	4	10.00	232	0.43
Year -3 Month 10	Generator Sets	1	10.00	18	0.74
Year -3 Month 10	Graders	1	10.00	259	0.41
Year -3 Month 10	Other Construction Equipment	1	10.00	407	0.42
Year -3 Month 10	Other Construction Equipment	3	10.00	130	0.42
Year -3 Month 11	Crawler Tractors	1	10.00	585	0.43
Year -3 Month 11	Crawler Tractors	1	10.00	207	0.43
Year -3 Month 11	Crawler Tractors	4	10.00	232	0.43
Year -3 Month 11	Generator Sets	1	10.00	18	0.74
Year -3 Month 11	Graders	1	10.00	259	0.41
Year -3 Month 11	Other Construction Equipment	1	10.00	407	0.42
Year -3 Month 11	Other Construction Equipment	3	10.00	130	0.42
Year -3 Month 12	Crawler Tractors	1	10.00	585	0.43
Year -3 Month 12	Crawler Tractors	1	10.00	207	0.43

Year -3 Month 12	Crawler Tractors	4	10.00	232	0.43
Year -3 Month 12	Generator Sets	1	10.00	18	0.74
Year -3 Month 12	Graders	1	10.00	259	0.41
Year -3 Month 12	Other Construction Equipment	1	10.00	407	0.42
Year -3 Month 12	Other Construction Equipment	3	10.00	130	0.42
Year -2 Month 1	Air Compressors	1	10.00	50	0.48
Year -2 Month 1	Cranes	1	10.00	62	0.29
Year -2 Month 1	Crawler Tractors	1	10.00	585	0.43
Year -2 Month 1	Crawler Tractors	1	10.00	207	0.43
Year -2 Month 1	Crawler Tractors	4	10.00	232	0.43
Year -2 Month 1	Excavators	1	10.00	42	0.38
Year -2 Month 1	Forklifts	2	10.00	73	0.20
Year -2 Month 1	Generator Sets	1	10.00	18	0.74
Year -2 Month 1	Graders	1	10.00	259	0.41
Year -2 Month 1	Other Construction Equipment	4	10.00	180	0.42
Year -2 Month 1	Other Construction Equipment	4	10.00	130	0.42
Year -2 Month 1	Other Construction Equipment	1	10.00	407	0.42
Year -2 Month 1	Other Construction Equipment	3	10.00	210	0.42
Year -2 Month 1	Other Construction Equipment	1	10.00	273	0.42
Year -2 Month 1	Other Construction Equipment	2	10.00	50	0.42
Year -2 Month 1	Plate Compactors	1	10.00	3	0.43
Year -2 Month 1	Plate Compactors	1	10.00	8	0.43
Year -2 Month 1	Rubber Tired Loaders	1	10.00	125	0.36
Year -2 Month 1	Skid Steer Loaders	1	10.00	45	0.37
Year -2 Month 1	Tractors/Loaders/Backhoes	2	10.00	67	0.37
Year -2 Month 1	Welders	1	10.00	48	0.45
Year -2 Month 2	Air Compressors	2	10.00	50	0.48
Year -2 Month 2	Cranes	3	10.00	62	0.29

Year -2 Month 2	Cranes	1	10.00	150	0.29
Year -2 Month 2	Crawler Tractors	1	10.00	585	0.43
Year -2 Month 2	Crawler Tractors	1	10.00	207	0.43
Year -2 Month 2	Crawler Tractors	4	10.00	232	0.43
Year -2 Month 2	Excavators	1	10.00	42	0.38
Year -2 Month 2	Forklifts	4	10.00	73	0.20
Year -2 Month 2	Generator Sets	2	10.00	18	0.74
Year -2 Month 2	Graders	1	10.00	259	0.41
Year -2 Month 2	Other Construction Equipment	4	10.00	180	0.42
Year -2 Month 2	Other Construction Equipment	4	10.00	130	0.42
Year -2 Month 2	Other Construction Equipment	1	10.00	407	0.42
Year -2 Month 2	Other Construction Equipment	3	10.00	210	0.42
Year -2 Month 2	Other Construction Equipment	1	10.00	273	0.42
Year -2 Month 2	Other Construction Equipment	2	10.00	50	0.42
Year -2 Month 2	Plate Compactors	1	10.00	3	0.43
Year -2 Month 2	Plate Compactors	2	10.00	8	0.43
Year -2 Month 2	Rubber Tired Loaders	1	10.00	125	0.36
Year -2 Month 2	Skid Steer Loaders	1	10.00	45	0.37
Year -2 Month 2	Tractors/Loaders/Backhoes	3	10.00	67	0.37
Year -2 Month 2	Welders	2	10.00	48	0.45
Year -2 Month 3	Aerial Lifts	1	10.00	24	0.31
Year -2 Month 3	Air Compressors	4	10.00	50	0.48
Year -2 Month 3	Cranes	3	10.00	62	0.29
Year -2 Month 3	Cranes	1	10.00	150	0.29
Year -2 Month 3	Crawler Tractors	3	10.00	585	0.43
Year -2 Month 3	Crawler Tractors	2	10.00	207	0.43
Year -2 Month 3	Crawler Tractors	5	10.00	232	0.43
Year -2 Month 3	Excavators	1	10.00	42	0.38

Year -2 Month 3	Forklifts	4	10.00	73	0.20
Year -2 Month 3	Generator Sets	4	10.00	18	0.74
Year -2 Month 3	Graders	2	10.00	259	0.41
Year -2 Month 3	Other Construction Equipment	7	10.00	180	0.42
Year -2 Month 3	Other Construction Equipment	6	10.00	130	0.42
Year -2 Month 3	Other Construction Equipment	2	10.00	407	0.42
Year -2 Month 3	Other Construction Equipment	4	10.00	210	0.42
Year -2 Month 3	Other Construction Equipment	1	10.00	273	0.42
Year -2 Month 3	Other Construction Equipment	4	10.00	50	0.42
Year -2 Month 3	Other Construction Equipment	4	10.00	305	0.42
Year -2 Month 3	Plate Compactors	1	10.00	3	0.43
Year -2 Month 3	Plate Compactors	2	10.00	8	0.43
Year -2 Month 3	Rubber Tired Loaders	2	10.00	125	0.36
Year -2 Month 3	Skid Steer Loaders	1	10.00	45	0.37
Year -2 Month 3	Tractors/Loaders/Backhoes	3	10.00	67	0.37
Year -2 Month 3	Welders	4	10.00	48	0.45
Year -2 Month 4	Aerial Lifts	2	10.00	24	0.31
Year -2 Month 4	Air Compressors	4	10.00	50	0.48
Year -2 Month 4	Cranes	3	10.00	62	0.29
Year -2 Month 4	Cranes	1	10.00	150	0.29
Year -2 Month 4	Crawler Tractors	3	10.00	585	0.43
Year -2 Month 4	Crawler Tractors	2	10.00	207	0.43
Year -2 Month 4	Crawler Tractors	5	10.00	232	0.43
Year -2 Month 4	Excavators	1	10.00	42	0.38
Year -2 Month 4	Forklifts	4	10.00	73	0.20
Year -2 Month 4	Generator Sets	4	10.00	18	0.74
Year -2 Month 4	Graders	2	10.00	259	0.41
Year -2 Month 4	Other Construction Equipment	7	10.00	180	0.42

Year -2 Month 4	Other Construction Equipment	6	10.00	130	0.42
Year -2 Month 4	Other Construction Equipment	2	10.00	407	0.42
Year -2 Month 4	Other Construction Equipment	4	10.00	210	0.42
Year -2 Month 4	Other Construction Equipment	1	10.00	273	0.42
Year -2 Month 4	Other Construction Equipment	4	10.00	50	0.42
Year -2 Month 4	Other Construction Equipment	4	10.00	305	0.42
Year -2 Month 4	Plate Compactors	1	10.00	3	0.43
Year -2 Month 4	Plate Compactors	2	10.00	8	0.43
Year -2 Month 4	Rubber Tired Loaders	2	10.00	125	0.36
Year -2 Month 4	Skid Steer Loaders	1	10.00	45	0.37
Year -2 Month 4	Tractors/Loaders/Backhoes	3	10.00	67	0.37
Year -2 Month 4	Welders	4	10.00	48	0.45
Year -2 Month 5	Aerial Lifts	2	10.00	24	0.31
Year -2 Month 5	Air Compressors	4	10.00	50	0.48
Year -2 Month 5	Cranes	3	10.00	62	0.29
Year -2 Month 5	Cranes	1	10.00	150	0.29
Year -2 Month 5	Crawler Tractors	3	10.00	585	0.43
Year -2 Month 5	Crawler Tractors	2	10.00	207	0.43
Year -2 Month 5	Crawler Tractors	5	10.00	232	0.43
Year -2 Month 5	Excavators	1	10.00	42	0.38
Year -2 Month 5	Forklifts	4	10.00	73	0.20
Year -2 Month 5	Generator Sets	4	10.00	18	0.74
Year -2 Month 5	Graders	2	10.00	259	0.41
Year -2 Month 5	Other Construction Equipment	8	10.00	180	0.42
Year -2 Month 5	Other Construction Equipment	6	10.00	130	0.42
Year -2 Month 5	Other Construction Equipment	2	10.00	407	0.42
Year -2 Month 5	Other Construction Equipment	6	10.00	210	0.42
Year -2 Month 5	Other Construction Equipment	1	10.00	273	0.42

Year -2 Month 5	Other Construction Equipment	4	10.00	50	0.42
Year -2 Month 5	Other Construction Equipment	5	10.00	305	0.42
Year -2 Month 5	Plate Compactors	1	10.00	3	0.43
Year -2 Month 5	Plate Compactors	2	10.00	8	0.43
Year -2 Month 5	Rubber Tired Loaders	2	10.00	125	0.36
Year -2 Month 5	Skid Steer Loaders	1	10.00	45	0.37
Year -2 Month 5	Tractors/Loaders/Backhoes	2	10.00	67	0.37
Year -2 Month 5	Welders	7	10.00	48	0.45
Year -2 Month 6	Aerial Lifts	2	10.00	24	0.31
Year -2 Month 6	Air Compressors	4	10.00	50	0.48
Year -2 Month 6	Cranes	5	10.00	62	0.29
Year -2 Month 6	Cranes	1	10.00	150	0.29
Year -2 Month 6	Cranes	1	10.00	240	0.29
Year -2 Month 6	Crawler Tractors	3	10.00	585	0.43
Year -2 Month 6	Crawler Tractors	2	10.00	207	0.43
Year -2 Month 6	Crawler Tractors	5	10.00	232	0.43
Year -2 Month 6	Excavators	1	10.00	42	0.38
Year -2 Month 6	Forklifts	4	10.00	73	0.20
Year -2 Month 6	Generator Sets	4	10.00	18	0.74
Year -2 Month 6	Graders	2	10.00	259	0.41
Year -2 Month 6	Other Construction Equipment	8	10.00	180	0.42
Year -2 Month 6	Other Construction Equipment	6	10.00	130	0.42
Year -2 Month 6	Other Construction Equipment	2	10.00	407	0.42
Year -2 Month 6	Other Construction Equipment	6	10.00	210	0.42
Year -2 Month 6	Other Construction Equipment	1	10.00	273	0.42
Year -2 Month 6	Other Construction Equipment	4	10.00	50	0.42
Year -2 Month 6	Other Construction Equipment	6	10.00	305	0.42
Year -2 Month 6	Plate Compactors	1	10.00	3	0.43

Year -2 Month 6	Plate Compactors	2	10.00	8	0.43
Year -2 Month 6	Rubber Tired Loaders	2	10.00	125	0.36
Year -2 Month 6	Skid Steer Loaders	1	10.00	45	0.37
Year -2 Month 6	Tractors/Loaders/Backhoes	2	10.00	67	0.37
Year -2 Month 6	Welders	7	10.00	48	0.45
Year -2 Month 7	Aerial Lifts	2	10.00	24	0.31
Year -2 Month 7	Air Compressors	4	10.00	50	0.48
Year -2 Month 7	Cranes	4	10.00	62	0.29
Year -2 Month 7	Cranes	1	10.00	150	0.29
Year -2 Month 7	Crawler Tractors	3	10.00	585	0.43
Year -2 Month 7	Crawler Tractors	2	10.00	207	0.43
Year -2 Month 7	Crawler Tractors	5	10.00	232	0.43
Year -2 Month 7	Forklifts	4	10.00	73	0.20
Year -2 Month 7	Generator Sets	4	10.00	18	0.74
Year -2 Month 7	Graders	2	10.00	259	0.41
Year -2 Month 7	Other Construction Equipment	7	10.00	180	0.42
Year -2 Month 7	Other Construction Equipment	4	10.00	130	0.42
Year -2 Month 7	Other Construction Equipment	2	10.00	407	0.42
Year -2 Month 7	Other Construction Equipment	6	10.00	210	0.42
Year -2 Month 7	Other Construction Equipment	1	10.00	273	0.42
Year -2 Month 7	Other Construction Equipment	4	10.00	50	0.42
Year -2 Month 7	Other Construction Equipment	6	10.00	305	0.42
Year -2 Month 7	Plate Compactors	1	10.00	3	0.43
Year -2 Month 7	Plate Compactors	2	10.00	8	0.43
Year -2 Month 7	Rubber Tired Loaders	2	10.00	125	0.36
Year -2 Month 7	Skid Steer Loaders	1	10.00	45	0.37
Year -2 Month 7	Tractors/Loaders/Backhoes	1	10.00	67	0.37
Year -2 Month 7	Welders	7	10.00	48	0.45

Year -2 Month 8	Aerial Lifts	1	10.00	24	0.31
Year -2 Month 8	Air Compressors	2	10.00	50	0.48
Year -2 Month 8	Cranes	4	10.00	62	0.29
Year -2 Month 8	Cranes	1	10.00	150	0.29
Year -2 Month 8	Crawler Tractors	3	10.00	585	0.43
Year -2 Month 8	Crawler Tractors	2	10.00	207	0.43
Year -2 Month 8	Crawler Tractors	5	10.00	232	0.43
Year -2 Month 8	Forklifts	4	10.00	73	0.20
Year -2 Month 8	Generator Sets	2	10.00	18	0.74
Year -2 Month 8	Graders	2	10.00	259	0.41
Year -2 Month 8	Other Construction Equipment	7	10.00	180	0.42
Year -2 Month 8	Other Construction Equipment	4	10.00	130	0.42
Year -2 Month 8	Other Construction Equipment	2	10.00	407	0.42
Year -2 Month 8	Other Construction Equipment	6	10.00	210	0.42
Year -2 Month 8	Other Construction Equipment	1	10.00	273	0.42
Year -2 Month 8	Other Construction Equipment	4	10.00	50	0.42
Year -2 Month 8	Other Construction Equipment	4	10.00	305	0.42
Year -2 Month 8	Plate Compactors	1	10.00	3	0.43
Year -2 Month 8	Plate Compactors	2	10.00	8	0.43
Year -2 Month 8	Rubber Tired Loaders	1	10.00	125	0.36
Year -2 Month 8	Skid Steer Loaders	1	10.00	45	0.37
Year -2 Month 8	Tractors/Loaders/Backhoes	1	10.00	67	0.37
Year -2 Month 8	Welders	7	10.00	48	0.45
Year -2 Month 9	Aerial Lifts	1	10.00	24	0.31
Year -2 Month 9	Air Compressors	2	10.00	50	0.48
Year -2 Month 9	Cranes	2	10.00	62	0.29
Year -2 Month 9	Cranes	1	10.00	150	0.29
Year -2 Month 9	Crawler Tractors	2	10.00	585	0.43

Year -2 Month 9	Crawler Tractors	4	10.00	232	0.43
Year -2 Month 9	Forklifts	3	10.00	73	0.20
Year -2 Month 9	Generator Sets	2	10.00	18	0.74
Year -2 Month 9	Graders	1	10.00	259	0.41
Year -2 Month 9	Other Construction Equipment	6	10.00	180	0.42
Year -2 Month 9	Other Construction Equipment	2	10.00	130	0.42
Year -2 Month 9	Other Construction Equipment	1	10.00	407	0.42
Year -2 Month 9	Other Construction Equipment	4	10.00	210	0.42
Year -2 Month 9	Other Construction Equipment	1	10.00	273	0.42
Year -2 Month 9	Other Construction Equipment	4	10.00	50	0.42
Year -2 Month 9	Other Construction Equipment	4	10.00	305	0.42
Year -2 Month 9	Plate Compactors	1	10.00	3	0.43
Year -2 Month 9	Plate Compactors	2	10.00	8	0.43
Year -2 Month 9	Rubber Tired Loaders	1	10.00	125	0.36
Year -2 Month 9	Skid Steer Loaders	1	10.00	45	0.37
Year -2 Month 9	Tractors/Loaders/Backhoes	1	10.00	67	0.37
Year -2 Month 9	Welders	7	10.00	48	0.45
Year -2 Month 10	Aerial Lifts	1	10.00	24	0.31
Year -2 Month 10	Air Compressors	2	10.00	50	0.48
Year -2 Month 10	Cranes	2	10.00	62	0.29
Year -2 Month 10	Crawler Tractors	1	10.00	585	0.43
Year -2 Month 10	Crawler Tractors	1	10.00	207	0.43
Year -2 Month 10	Crawler Tractors	4	10.00	232	0.43
Year -2 Month 10	Forklifts	3	10.00	73	0.20
Year -2 Month 10	Generator Sets	2	10.00	18	0.74
Year -2 Month 10	Graders	1	10.00	259	0.41
Year -2 Month 10	Other Construction Equipment	6	10.00	180	0.42
Year -2 Month 10	Other Construction Equipment	2	10.00	130	0.42

Year -2 Month 10	Other Construction Equipment	1	10.00	407	0.42
Year -2 Month 10	Other Construction Equipment	4	10.00	210	0.42
Year -2 Month 10	Other Construction Equipment	1	10.00	273	0.42
Year -2 Month 10	Other Construction Equipment	2	10.00	50	0.42
Year -2 Month 10	Plate Compactors	1	10.00	3	0.43
Year -2 Month 10	Skid Steer Loaders	1	10.00	45	0.37
Year -2 Month 10	Tractors/Loaders/Backhoes	1	10.00	67	0.37
Year -2 Month 10	Welders	4	10.00	48	0.45
Year -2 Month 11	Aerial Lifts	1	10.00	24	0.31
Year -2 Month 11	Air Compressors	2	10.00	50	0.48
Year -2 Month 11	Cranes	2	10.00	62	0.29
Year -2 Month 11	Forklifts	2	10.00	73	0.20
Year -2 Month 11	Generator Sets	2	10.00	18	0.74
Year -2 Month 11	Other Construction Equipment	3	10.00	180	0.42
Year -2 Month 11	Other Construction Equipment	3	10.00	210	0.42
Year -2 Month 11	Other Construction Equipment	1	10.00	273	0.42
Year -2 Month 11	Other Construction Equipment	2	10.00	50	0.42
Year -2 Month 11	Plate Compactors	1	10.00	3	0.43
Year -2 Month 11	Skid Steer Loaders	1	10.00	45	0.37
Year -2 Month 11	Tractors/Loaders/Backhoes	1	10.00	67	0.37
Year -2 Month 11	Welders	2	10.00	48	0.45
Year -2 Month 12	Aerial Lifts	1	10.00	24	0.31
Year -2 Month 12	Air Compressors	1	10.00	50	0.48
Year -2 Month 12	Cranes	2	10.00	62	0.29
Year -2 Month 12	Forklifts	2	10.00	73	0.20
Year -2 Month 12	Generator Sets	1	10.00	18	0.74
Year -2 Month 12	Other Construction Equipment	3	10.00	180	0.42
Year -2 Month 12	Other Construction Equipment	3	10.00	210	0.42

Year -2 Month 12	Other Construction Equipment	1	10.00	273	0.42
Year -2 Month 12	Other Construction Equipment	1	10.00	50	0.42
Year -2 Month 12	Skid Steer Loaders	1	10.00	45	0.37
Year -2 Month 12	Tractors/Loaders/Backhoes	1	10.00	67	0.37
Year -2 Month 12	Welders	1	10.00	48	0.45
Year -1 Month 1	Air Compressors	1	10.00	50	0.48
Year -1 Month 1	Crawler Tractors	2	10.00	232	0.43
Year -1 Month 1	Forklifts	2	10.00	73	0.20
Year -1 Month 1	Generator Sets	1	10.00	18	0.74
Year -1 Month 1	Other Construction Equipment	1	10.00	180	0.42
Year -1 Month 1	Other Construction Equipment	1	10.00	260	0.42
Year -1 Month 1	Other Construction Equipment	2	10.00	50	0.42
Year -1 Month 1	Other Construction Equipment	2	10.00	210	0.42
Year -1 Month 1	Other Construction Equipment	4	10.00	130	0.42
Year -1 Month 1	Other Construction Equipment	4	10.00	180	0.42
Year -1 Month 1	Other Construction Equipment	1	10.00	273	0.42
Year -1 Month 1	Plate Compactors	2	10.00	33	0.43
Year -1 Month 1	Plate Compactors	1	10.00	14	0.43
Year -1 Month 1	Plate Compactors	1	10.00	3	0.43
Year -1 Month 1	Rubber Tired Loaders	1	10.00	125	0.36
Year -1 Month 1	Rubber Tired Loaders	2	10.00	160	0.36
Year -1 Month 1	Skid Steer Loaders	1	10.00	45	0.37
Year -1 Month 1	Tractors/Loaders/Backhoes	6	10.00	67	0.37
Year -1 Month 1	Welders	1	10.00	48	0.45
Year -1 Month 2	Air Compressors	2	10.00	50	0.48
Year -1 Month 2	Cranes	8	10.00	226	0.29
Year -1 Month 2	Cranes	2	10.00	62	0.29
Year -1 Month 2	Cranes	1	10.00	150	0.29

Year -1 Month 2	Crawler Tractors	2	10.00	232	0.43
Year -1 Month 2	Forklifts	4	10.00	73	0.20
Year -1 Month 2	Generator Sets	2	10.00	18	0.74
Year -1 Month 2	Other Construction Equipment	1	10.00	180	0.42
Year -1 Month 2	Other Construction Equipment	1	10.00	260	0.42
Year -1 Month 2	Other Construction Equipment	2	10.00	50	0.42
Year -1 Month 2	Other Construction Equipment	2	10.00	210	0.42
Year -1 Month 2	Other Construction Equipment	13	10.00	130	0.42
Year -1 Month 2	Other Construction Equipment	13	10.00	180	0.42
Year -1 Month 2	Other Construction Equipment	1	10.00	273	0.42
Year -1 Month 2	Plate Compactors	2	10.00	33	0.43
Year -1 Month 2	Plate Compactors	2	10.00	14	0.43
Year -1 Month 2	Plate Compactors	1	10.00	3	0.43
Year -1 Month 2	Rubber Tired Loaders	1	10.00	125	0.36
Year -1 Month 2	Rubber Tired Loaders	2	10.00	160	0.36
Year -1 Month 2	Skid Steer Loaders	1	10.00	45	0.37
Year -1 Month 2	Tractors/Loaders/Backhoes	9	10.00	67	0.37
Year -1 Month 2	Welders	2	10.00	48	0.45
Year -1 Month 3	Aerial Lifts	1	10.00	24	0.31
Year -1 Month 3	Air Compressors	4	10.00	50	0.48
Year -1 Month 3	Cranes	8	10.00	226	0.29
Year -1 Month 3	Cranes	2	10.00	62	0.29
Year -1 Month 3	Cranes	1	10.00	150	0.29
Year -1 Month 3	Crawler Tractors	6	10.00	232	0.43
Year -1 Month 3	Crawler Tractors	1	10.00	585	0.43
Year -1 Month 3	Crawler Tractors	1	10.00	207	0.43
Year -1 Month 3	Forklifts	4	10.00	73	0.20
Year -1 Month 3	Generator Sets	4	10.00	18	0.74

Year -1 Month 3	Graders	1	10.00	259	0.41
Year -1 Month 3	Other Construction Equipment	1	10.00	407	0.42
Year -1 Month 3	Other Construction Equipment	1	10.00	180	0.42
Year -1 Month 3	Other Construction Equipment	1	10.00	260	0.42
Year -1 Month 3	Other Construction Equipment	4	10.00	50	0.42
Year -1 Month 3	Other Construction Equipment	3	10.00	210	0.42
Year -1 Month 3	Other Construction Equipment	4	10.00	305	0.42
Year -1 Month 3	Other Construction Equipment	15	10.00	130	0.42
Year -1 Month 3	Other Construction Equipment	16	10.00	180	0.42
Year -1 Month 3	Other Construction Equipment	1	10.00	273	0.42
Year -1 Month 3	Plate Compactors	2	10.00	33	0.43
Year -1 Month 3	Plate Compactors	2	10.00	14	0.43
Year -1 Month 3	Plate Compactors	1	10.00	3	0.43
Year -1 Month 3	Rubber Tired Loaders	2	10.00	125	0.36
Year -1 Month 3	Rubber Tired Loaders	2	10.00	160	0.36
Year -1 Month 3	Skid Steer Loaders	1	10.00	45	0.37
Year -1 Month 3	Tractors/Loaders/Backhoes	9	10.00	67	0.37
Year -1 Month 3	Welders	14	10.00	42	0.45
Year -1 Month 3	Welders	4	10.00	48	0.45
Year -1 Month 3	Welders	14	10.00	42	0.45
Year -1 Month 4	Aerial Lifts	2	10.00	24	0.31
Year -1 Month 4	Air Compressors	5	10.00	50	0.48
Year -1 Month 4	Cranes	8	10.00	226	0.29
Year -1 Month 4	Cranes	2	10.00	62	0.29
Year -1 Month 4	Cranes	1	10.00	150	0.29
Year -1 Month 4	Crawler Tractors	6	10.00	232	0.43
Year -1 Month 4	Crawler Tractors	1	10.00	585	0.43
Year -1 Month 4	Crawler Tractors	1	10.00	207	0.43

Year -1 Month 4	Forklifts	4	10.00	73	0.20
Year -1 Month 4	Generator Sets	5	10.00	18	0.74
Year -1 Month 4	Graders	1	10.00	259	0.41
Year -1 Month 4	Other Construction Equipment	1	10.00	407	0.42
Year -1 Month 4	Other Construction Equipment	1	10.00	180	0.42
Year -1 Month 4	Other Construction Equipment	1	10.00	260	0.42
Year -1 Month 4	Other Construction Equipment	4	10.00	50	0.42
Year -1 Month 4	Other Construction Equipment	8	10.00	210	0.42
Year -1 Month 4	Other Construction Equipment	4	10.00	305	0.42
Year -1 Month 4	Other Construction Equipment	17	10.00	130	0.42
Year -1 Month 4	Other Construction Equipment	19	10.00	180	0.42
Year -1 Month 4	Other Construction Equipment	1	10.00	273	0.42
Year -1 Month 4	Plate Compactors	2	10.00	33	0.43
Year -1 Month 4	Plate Compactors	2	10.00	14	0.43
Year -1 Month 4	Plate Compactors	1	10.00	3	0.43
Year -1 Month 4	Rubber Tired Loaders	2	10.00	125	0.36
Year -1 Month 4	Rubber Tired Loaders	2	10.00	160	0.36
Year -1 Month 4	Skid Steer Loaders	1	10.00	45	0.37
Year -1 Month 4	Tractors/Loaders/Backhoes	9	10.00	67	0.37
Year -1 Month 4	Welders	4	10.00	48	0.45
Year -1 Month 4	Welders	14	10.00	42	0.45
Year -1 Month 5	Aerial Lifts	2	10.00	24	0.31
Year -1 Month 5	Air Compressors	5	10.00	50	0.48
Year -1 Month 5	Cranes	8	10.00	226	0.29
Year -1 Month 5	Cranes	2	10.00	62	0.29
Year -1 Month 5	Cranes	1	10.00	150	0.29
Year -1 Month 5	Crawler Tractors	6	10.00	232	0.43
Year -1 Month 5	Crawler Tractors	1	10.00	585	0.43

Year -1 Month 5	Crawler Tractors	1	10.00	207	0.43
Year -1 Month 5	Forklifts	4	10.00	73	0.20
Year -1 Month 5	Generator Sets	5	10.00	18	0.74
Year -1 Month 5	Graders	1	10.00	259	0.41
Year -1 Month 5	Other Construction Equipment	1	10.00	407	0.42
Year -1 Month 5	Other Construction Equipment	2	10.00	180	0.42
Year -1 Month 5	Other Construction Equipment	1	10.00	260	0.42
Year -1 Month 5	Other Construction Equipment	4	10.00	50	0.42
Year -1 Month 5	Other Construction Equipment	9	10.00	210	0.42
Year -1 Month 5	Other Construction Equipment	5	10.00	305	0.42
Year -1 Month 5	Other Construction Equipment	17	10.00	130	0.42
Year -1 Month 5	Other Construction Equipment	20	10.00	180	0.42
Year -1 Month 5	Other Construction Equipment	1	10.00	273	0.42
Year -1 Month 5	Plate Compactors	2	10.00	33	0.43
Year -1 Month 5	Plate Compactors	2	10.00	14	0.43
Year -1 Month 5	Plate Compactors	1	10.00	3	0.43
Year -1 Month 5	Rubber Tired Loaders	2	10.00	125	0.36
Year -1 Month 5	Rubber Tired Loaders	2	10.00	160	0.36
Year -1 Month 5	Skid Steer Loaders	1	10.00	45	0.37
Year -1 Month 5	Tractors/Loaders/Backhoes	8	10.00	67	0.37
Year -1 Month 5	Welders	7	10.00	48	0.45
Year -1 Month 5	Welders	14	10.00	42	0.45
Year -1 Month 6	Aerial Lifts	2	10.00	24	0.31
Year -1 Month 6	Air Compressors	5	10.00	50	0.48
Year -1 Month 6	Concrete/Industrial Saws	1	10.00	6	0.73
Year -1 Month 6	Concrete/Industrial Saws	1	10.00	20	0.73
Year -1 Month 6	Concrete/Industrial Saws	1	10.00	8	0.73
Year -1 Month 6	Cranes	8	10.00	226	0.29

Year -1 Month 6	Cranes	4	10.00	62	0.29
Year -1 Month 6	Cranes	1	10.00	150	0.29
Year -1 Month 6	Crawler Tractors	6	10.00	232	0.43
Year -1 Month 6	Crawler Tractors	1	10.00	585	0.43
Year -1 Month 6	Crawler Tractors	1	10.00	207	0.43
Year -1 Month 6	Forklifts	4	10.00	73	0.20
Year -1 Month 6	Generator Sets	5	10.00	18	0.74
Year -1 Month 6	Graders	1	10.00	259	0.41
Year -1 Month 6	Other Construction Equipment	1	10.00	407	0.42
Year -1 Month 6	Other Construction Equipment	2	10.00	180	0.42
Year -1 Month 6	Other Construction Equipment	1	10.00	260	0.42
Year -1 Month 6	Other Construction Equipment	4	10.00	50	0.42
Year -1 Month 6	Other Construction Equipment	9	10.00	210	0.42
Year -1 Month 6	Other Construction Equipment	6	10.00	305	0.42
Year -1 Month 6	Other Construction Equipment	16	10.00	130	0.42
Year -1 Month 6	Other Construction Equipment	20	10.00	180	0.42
Year -1 Month 6	Other Construction Equipment	1	10.00	273	0.42
Year -1 Month 6	Plate Compactors	3	10.00	33	0.43
Year -1 Month 6	Plate Compactors	2	10.00	14	0.43
Year -1 Month 6	Plate Compactors	3	10.00	3	0.43
Year -1 Month 6	Rubber Tired Loaders	2	10.00	125	0.36
Year -1 Month 6	Rubber Tired Loaders	2	10.00	160	0.36
Year -1 Month 6	Rubber Tired Loaders	1	10.00	200	0.36
Year -1 Month 6	Skid Steer Loaders	1	10.00	45	0.37
Year -1 Month 6	Tractors/Loaders/Backhoes	7	10.00	67	0.37
Year -1 Month 6	Tractors/Loaders/Backhoes	1	10.00	100	0.37
Year -1 Month 6	Welders	7	10.00	48	0.45
Year -1 Month 6	Welders	14	10.00	42	0.45

Year -1 Month 7	Aerial Lifts	2	10.00	24	0.31
Year -1 Month 7	Air Compressors	5	10.00	50	0.48
Year -1 Month 7	Concrete/Industrial Saws	1	10.00	6	0.73
Year -1 Month 7	Concrete/Industrial Saws	1	10.00	20	0.73
Year -1 Month 7	Concrete/Industrial Saws	1	10.00	8	0.73
Year -1 Month 7	Cranes	8	10.00	226	0.29
Year -1 Month 7	Cranes	4	10.00	62	0.29
Year -1 Month 7	Cranes	1	10.00	150	0.29
Year -1 Month 7	Crawler Tractors	6	10.00	232	0.43
Year -1 Month 7	Crawler Tractors	1	10.00	585	0.43
Year -1 Month 7	Crawler Tractors	1	10.00	207	0.43
Year -1 Month 7	Forklifts	4	10.00	73	0.20
Year -1 Month 7	Generator Sets	5	10.00	18	0.74
Year -1 Month 7	Graders	1	10.00	259	0.41
Year -1 Month 7	Other Construction Equipment	1	10.00	407	0.42
Year -1 Month 7	Other Construction Equipment	2	10.00	180	0.42
Year -1 Month 7	Other Construction Equipment	1	10.00	260	0.42
Year -1 Month 7	Other Construction Equipment	4	10.00	50	0.42
Year -1 Month 7	Other Construction Equipment	9	10.00	210	0.42
Year -1 Month 7	Other Construction Equipment	6	10.00	305	0.42
Year -1 Month 7	Other Construction Equipment	16	10.00	130	0.42
Year -1 Month 7	Other Construction Equipment	20	10.00	180	0.42
Year -1 Month 7	Other Construction Equipment	1	10.00	273	0.42
Year -1 Month 7	Plate Compactors	3	10.00	33	0.43
Year -1 Month 7	Plate Compactors	2	10.00	14	0.43
Year -1 Month 7	Plate Compactors	3	10.00	3	0.43
Year -1 Month 7	Rubber Tired Loaders	2	10.00	125	0.36
Year -1 Month 7	Rubber Tired Loaders	2	10.00	160	0.36

Year -1 Month 7	Rubber Tired Loaders	1	10.00	200	0.36
Year -1 Month 7	Skid Steer Loaders	1	10.00	45	0.37
Year -1 Month 7	Tractors/Loaders/Backhoes	7	10.00	67	0.37
Year -1 Month 7	Tractors/Loaders/Backhoes	1	10.00	100	0.37
Year -1 Month 7	Welders	7	10.00	48	0.45
Year -1 Month 7	Welders	14	10.00	42	0.45
Year -1 Month 8	Aerial Lifts	1	10.00	24	0.31
Year -1 Month 8	Air Compressors	3	10.00	50	0.48
Year -1 Month 8	Cranes	8	10.00	226	0.29
Year -1 Month 8	Cranes	5	10.00	62	0.29
Year -1 Month 8	Cranes	1	10.00	150	0.29
Year -1 Month 8	Crawler Tractors	5	10.00	232	0.43
Year -1 Month 8	Crawler Tractors	1	10.00	585	0.43
Year -1 Month 8	Crawler Tractors	1	10.00	207	0.43
Year -1 Month 8	Forklifts	4	10.00	73	0.20
Year -1 Month 8	Generator Sets	3	10.00	18	0.74
Year -1 Month 8	Graders	1	10.00	259	0.41
Year -1 Month 8	Other Construction Equipment	1	10.00	407	0.42
Year -1 Month 8	Other Construction Equipment	2	10.00	180	0.42
Year -1 Month 8	Other Construction Equipment	1	10.00	260	0.42
Year -1 Month 8	Other Construction Equipment	4	10.00	50	0.42
Year -1 Month 8	Other Construction Equipment	9	10.00	210	0.42
Year -1 Month 8	Other Construction Equipment	4	10.00	305	0.42
Year -1 Month 8	Other Construction Equipment	15	10.00	130	0.42
Year -1 Month 8	Other Construction Equipment	19	10.00	180	0.42
Year -1 Month 8	Other Construction Equipment	1	10.00	273	0.42
Year -1 Month 8	Plate Compactors	1	10.00	33	0.43
Year -1 Month 8	Plate Compactors	2	10.00	14	0.43

Year -1 Month 8	Plate Compactors	1	10.00	3	0.43
Year -1 Month 8	Rubber Tired Loaders	1	10.00	125	0.36
Year -1 Month 8	Rubber Tired Loaders	1	10.00	160	0.36
Year -1 Month 8	Skid Steer Loaders	1	10.00	45	0.37
Year -1 Month 8	Tractors/Loaders/Backhoes	5	10.00	67	0.37
Year -1 Month 8	Welders	7	10.00	48	0.45
Year -1 Month 8	Welders	14	10.00	42	0.45
Year -1 Month 9	Aerial Lifts	1	10.00	24	0.31
Year -1 Month 9	Air Compressors	3	10.00	50	0.48
Year -1 Month 9	Cranes	7	10.00	226	0.29
Year -1 Month 9	Cranes	3	10.00	62	0.29
Year -1 Month 9	Cranes	1	10.00	150	0.29
Year -1 Month 9	Crawler Tractors	5	10.00	232	0.43
Year -1 Month 9	Crawler Tractors	1	10.00	585	0.43
Year -1 Month 9	Crawler Tractors	1	10.00	207	0.43
Year -1 Month 9	Forklifts	3	10.00	73	0.20
Year -1 Month 9	Generator Sets	3	10.00	18	0.74
Year -1 Month 9	Graders	1	10.00	259	0.41
Year -1 Month 9	Other Construction Equipment	1	10.00	407	0.42
Year -1 Month 9	Other Construction Equipment	1	10.00	180	0.42
Year -1 Month 9	Other Construction Equipment	1	10.00	260	0.42
Year -1 Month 9	Other Construction Equipment	4	10.00	50	0.42
Year -1 Month 9	Other Construction Equipment	4	10.00	210	0.42
Year -1 Month 9	Other Construction Equipment	4	10.00	305	0.42
Year -1 Month 9	Other Construction Equipment	16	10.00	130	0.42
Year -1 Month 9	Other Construction Equipment	16	10.00	180	0.42
Year -1 Month 9	Other Construction Equipment	1	10.00	273	0.42
Year -1 Month 9	Plate Compactors	1	10.00	33	0.43

Year -1 Month 9	Plate Compactors	2	10.00	14	0.43
Year -1 Month 9	Plate Compactors	1	10.00	3	0.43
Year -1 Month 9	Rubber Tired Loaders	1	10.00	125	0.36
Year -1 Month 9	Rubber Tired Loaders	1	10.00	160	0.36
Year -1 Month 9	Skid Steer Loaders	1	10.00	45	0.37
Year -1 Month 9	Tractors/Loaders/Backhoes	5	10.00	67	0.37
Year -1 Month 9	Welders	7	10.00	48	0.45
Year -1 Month 9	Welders	13	10.00	42	0.45
Year -1 Month 10	Aerial Lifts	1	10.00	24	0.31
Year -1 Month 10	Air Compressors	3	10.00	50	0.48
Year -1 Month 10	Cranes	4	10.00	226	0.29
Year -1 Month 10	Cranes	2	10.00	62	0.29
Year -1 Month 10	Crawler Tractors	4	10.00	232	0.43
Year -1 Month 10	Crawler Tractors	1	10.00	585	0.43
Year -1 Month 10	Crawler Tractors	1	10.00	207	0.43
Year -1 Month 10	Forklifts	3	10.00	73	0.20
Year -1 Month 10	Generator Sets	3	10.00	18	0.74
Year -1 Month 10	Graders	1	10.00	259	0.41
Year -1 Month 10	Other Construction Equipment	1	10.00	407	0.42
Year -1 Month 10	Other Construction Equipment	1	10.00	180	0.42
Year -1 Month 10	Other Construction Equipment	1	10.00	260	0.42
Year -1 Month 10	Other Construction Equipment	2	10.00	50	0.42
Year -1 Month 10	Other Construction Equipment	4	10.00	210	0.42
Year -1 Month 10	Other Construction Equipment	12	10.00	130	0.42
Year -1 Month 10	Other Construction Equipment	12	10.00	180	0.42
Year -1 Month 10	Other Construction Equipment	1	10.00	273	0.42
Year -1 Month 10	Plate Compactors	1	10.00	3	0.43
Year -1 Month 10	Skid Steer Loaders	1	10.00	45	0.37

Year -1 Month 10	Tractors/Loaders/Backhoes	1	10.00	67	0.37
Year -1 Month 10	Welders	4	10.00	48	0.45
Year -1 Month 10	Welders	7	10.00	42	0.45
Year -1 Month 11	Aerial Lifts	1	10.00	24	0.31
Year -1 Month 11	Air Compressors	3	10.00	50	0.48
Year -1 Month 11	Cranes	4	10.00	226	0.29
Year -1 Month 11	Cranes	2	10.00	62	0.29
Year -1 Month 11	Forklifts	2	10.00	73	0.20
Year -1 Month 11	Generator Sets	3	10.00	18	0.74
Year -1 Month 11	Other Construction Equipment	1	10.00	180	0.42
Year -1 Month 11	Other Construction Equipment	1	10.00	260	0.42
Year -1 Month 11	Other Construction Equipment	2	10.00	50	0.42
Year -1 Month 11	Other Construction Equipment	3	10.00	210	0.42
Year -1 Month 11	Other Construction Equipment	10	10.00	130	0.42
Year -1 Month 11	Other Construction Equipment	9	10.00	180	0.42
Year -1 Month 11	Other Construction Equipment	1	10.00	273	0.42
Year -1 Month 11	Plate Compactors	1	10.00	3	0.43
Year -1 Month 11	Skid Steer Loaders	1	10.00	45	0.37
Year -1 Month 11	Tractors/Loaders/Backhoes	1	10.00	67	0.37
Year -1 Month 11	Welders	2	10.00	48	0.45
Year -1 Month 11	Welders	7	10.00	42	0.45
Year -1 Month 12	Aerial Lifts	1	10.00	40	0.31
Year -1 Month 12	Aerial Lifts	1	10.00	24	0.31
Year -1 Month 12	Air Compressors	2	10.00	50	0.48
Year -1 Month 12	Cranes	2	10.00	62	0.29
Year -1 Month 12	Forklifts	2	10.00	73	0.20
Year -1 Month 12	Generator Sets	2	10.00	18	0.74
Year -1 Month 12	Other Construction Equipment	1	10.00	180	0.42

Year -1 Month 12	Other Construction Equipment	1	10.00	260	0.42
Year -1 Month 12	Other Construction Equipment	1	10.00	50	0.42
Year -1 Month 12	Other Construction Equipment	2	10.00	210	0.42
Year -1 Month 12	Other Construction Equipment	2	10.00	130	0.42
Year -1 Month 12	Other Construction Equipment	2	10.00	180	0.42
Year -1 Month 12	Other Construction Equipment	1	10.00	273	0.42
Year -1 Month 12	Skid Steer Loaders	1	10.00	45	0.37
Year -1 Month 12	Tractors/Loaders/Backhoes	1	10.00	67	0.37
Year -1 Month 12	Welders	1	10.00	48	0.45
Year -1 Month 12	Welders	3	10.00	18	0.45
Year 1 Month 1	Crawler Tractors	1	10.00	232	0.43
Year 1 Month 1	Other Construction Equipment	1	10.00	130	0.42
Year 1 Month 1	Other Construction Equipment	1	10.00	180	0.42
Year 1 Month 1	Rubber Tired Loaders	1	10.00	160	0.36
Year 1 Month 1	Tractors/Loaders/Backhoes	1	10.00	67	0.37
Year 1 Month 2	Cranes	3	10.00	226	0.29
Year 1 Month 2	Crawler Tractors	1	10.00	232	0.43
Year 1 Month 2	Other Construction Equipment	3	10.00	130	0.42
Year 1 Month 2	Other Construction Equipment	3	10.00	180	0.42
Year 1 Month 2	Rubber Tired Loaders	1	10.00	160	0.36
Year 1 Month 2	Tractors/Loaders/Backhoes	1	10.00	67	0.37
Year 1 Month 2	Welders	3	10.00	42	0.45
Year 1 Month 3	Cranes	3	10.00	226	0.29
Year 1 Month 3	Other Construction Equipment	2	10.00	130	0.42
Year 1 Month 3	Other Construction Equipment	2	10.00	180	0.42
Year 1 Month 3	Welders	3	10.00	42	0.45
Year 1 Month 4	Cranes	3	10.00	226	0.29
Year 1 Month 4	Cranes	1	10.00	226	0.29

Year 1 Month 4	Other Construction Equipment	2	10.00	130	0.42
Year 1 Month 4	Other Construction Equipment	5	10.00	180	0.42
Year 1 Month 4	Other Construction Equipment	3	10.00	210	0.42
Year 1 Month 4	Welders	3	10.00	42	0.45
Year 1 Month 5	Cranes	3	10.00	226	0.29
Year 1 Month 5	Cranes	1	10.00	226	0.29
Year 1 Month 5	Other Construction Equipment	2	10.00	130	0.42
Year 1 Month 5	Other Construction Equipment	5	10.00	180	0.42
Year 1 Month 5	Other Construction Equipment	3	10.00	210	0.42
Year 1 Month 5	Welders	3	10.00	42	0.45
Year 1 Month 6	Cranes	2	10.00	226	0.29
Year 1 Month 6	Cranes	1	10.00	226	0.29
Year 1 Month 6	Other Construction Equipment	2	10.00	130	0.42
Year 1 Month 6	Other Construction Equipment	5	10.00	180	0.42
Year 1 Month 6	Other Construction Equipment	3	10.00	210	0.42
Year 1 Month 6	Welders	2	10.00	42	0.45
Year 1 Month 7	Cranes	2	10.00	226	0.29
Year 1 Month 7	Crawler Tractors	1	10.00	585	0.43
Year 1 Month 7	Crawler Tractors	1	10.00	207	0.43
Year 1 Month 7	Crawler Tractors	3	10.00	232	0.43
Year 1 Month 7	Graders	1	10.00	259	0.41
Year 1 Month 7	Other Construction Equipment	4	10.00	130	0.42
Year 1 Month 7	Other Construction Equipment	2	10.00	180	0.42
Year 1 Month 7	Other Construction Equipment	1	10.00	407	0.42
Year 1 Month 7	Welders	2	10.00	42	0.45
Year 1 Month 8	Cranes	2	10.00	226	0.29
Year 1 Month 8	Crawler Tractors	1	10.00	585	0.43
Year 1 Month 8	Crawler Tractors	1	10.00	207	0.43

Year 1 Month 8	Crawler Tractors	3	10.00	232	0.43
Year 1 Month 8	Graders	1	10.00	259	0.41
Year 1 Month 8	Other Construction Equipment	4	10.00	130	0.42
Year 1 Month 8	Other Construction Equipment	2	10.00	180	0.42
Year 1 Month 8	Other Construction Equipment	1	10.00	407	0.42
Year 1 Month 8	Welders	2	10.00	42	0.45
Year 1 Month 9	Crawler Tractors	1	10.00	585	0.43
Year 1 Month 9	Crawler Tractors	1	10.00	207	0.43
Year 1 Month 9	Crawler Tractors	3	10.00	232	0.43
Year 1 Month 9	Graders	1	10.00	259	0.41
Year 1 Month 9	Other Construction Equipment	2	10.00	130	0.42
Year 1 Month 9	Other Construction Equipment	1	10.00	407	0.42
Year 1 Month 10	Crawler Tractors	1	10.00	585	0.43
Year 1 Month 10	Crawler Tractors	1	10.00	207	0.43
Year 1 Month 10	Crawler Tractors	3	10.00	232	0.43
Year 1 Month 10	Graders	1	10.00	259	0.41
Year 1 Month 10	Other Construction Equipment	2	10.00	130	0.42
Year 1 Month 10	Other Construction Equipment	1	10.00	407	0.42
Year 2 Month 1	Crawler Tractors	1	10.00	232	0.43
Year 2 Month 1	Other Construction Equipment	1	10.00	130	0.42
Year 2 Month 1	Other Construction Equipment	1	10.00	180	0.42
Year 2 Month 1	Rubber Tired Loaders	1	10.00	160	0.36
Year 2 Month 1	Tractors/Loaders/Backhoes	1	10.00	67	0.37
Year 2 Month 2	Cranes	3	10.00	226	0.29
Year 2 Month 2	Crawler Tractors	1	10.00	232	0.43
Year 2 Month 2	Other Construction Equipment	3	10.00	130	0.42
Year 2 Month 2	Other Construction Equipment	3	10.00	180	0.42
Year 2 Month 2	Rubber Tired Loaders	1	10.00	160	0.36

Year 2 Month 2	Tractors/Loaders/Backhoes	1	10.00	67	0.37
Year 2 Month 2	Welders	3	10.00	42	0.45
Year 2 Month 3	Cranes	3	10.00	226	0.29
Year 2 Month 3	Crawler Tractors	1	10.00	232	0.43
Year 2 Month 3	Other Construction Equipment	3	10.00	130	0.42
Year 2 Month 3	Other Construction Equipment	3	10.00	180	0.42
Year 2 Month 3	Rubber Tired Loaders	1	10.00	160	0.36
Year 2 Month 3	Tractors/Loaders/Backhoes	1	10.00	67	0.37
Year 2 Month 3	Welders	3	10.00	42	0.45
Year 2 Month 4	Cranes	3	10.00	226	0.29
Year 2 Month 4	Cranes	1	10.00	226	0.29
Year 2 Month 4	Crawler Tractors	1	10.00	232	0.43
Year 2 Month 4	Other Construction Equipment	3	10.00	130	0.42
Year 2 Month 4	Other Construction Equipment	6	10.00	180	0.42
Year 2 Month 4	Other Construction Equipment	3	10.00	210	0.42
Year 2 Month 4	Rubber Tired Loaders	1	10.00	160	0.36
Year 2 Month 4	Tractors/Loaders/Backhoes	1	10.00	67	0.37
Year 2 Month 4	Welders	3	10.00	42	0.45
Year 2 Month 5	Cranes	3	10.00	226	0.29
Year 2 Month 5	Other Construction Equipment	2	10.00	130	0.42
Year 2 Month 5	Other Construction Equipment	5	10.00	180	0.42
Year 2 Month 5	Other Construction Equipment	3	10.00	210	0.42
Year 2 Month 5	Welders	2	10.00	42	0.45
Year 2 Month 6	Cranes	3	10.00	226	0.29
Year 2 Month 6	Other Construction Equipment	2	10.00	130	0.42
Year 2 Month 6	Other Construction Equipment	5	10.00	180	0.42
Year 2 Month 6	Other Construction Equipment	3	10.00	210	0.42
Year 2 Month 6	Welders	2	10.00	42	0.45

Year 2 Month 7	Cranes	2	10.00	226	0.29
Year 2 Month 7	Other Construction Equipment	2	10.00	130	0.42
Year 2 Month 7	Other Construction Equipment	2	10.00	180	0.42
Year 2 Month 7	Welders	2	10.00	42	0.45
Year 2 Month 8	Cranes	2	10.00	226	0.29
Year 2 Month 8	Crawler Tractors	1	10.00	585	0.43
Year 2 Month 8	Crawler Tractors	1	10.00	207	0.43
Year 2 Month 8	Crawler Tractors	4	10.00	232	0.43
Year 2 Month 8	Graders	1	10.00	259	0.41
Year 2 Month 8	Other Construction Equipment	4	10.00	130	0.42
Year 2 Month 8	Other Construction Equipment	2	10.00	180	0.42
Year 2 Month 8	Other Construction Equipment	1	10.00	407	0.42
Year 2 Month 8	Welders	2	10.00	42	0.45
Year 2 Month 9	Crawler Tractors	1	10.00	585	0.43
Year 2 Month 9	Crawler Tractors	1	10.00	207	0.43
Year 2 Month 9	Crawler Tractors	4	10.00	232	0.43
Year 2 Month 9	Graders	1	10.00	259	0.41
Year 2 Month 9	Other Construction Equipment	2	10.00	130	0.42
Year 2 Month 9	Other Construction Equipment	1	10.00	407	0.42
Year 2 Month 10	Crawler Tractors	1	10.00	585	0.43
Year 2 Month 10	Crawler Tractors	1	10.00	207	0.43
Year 2 Month 10	Crawler Tractors	4	10.00	232	0.43
Year 2 Month 10	Graders	1	10.00	259	0.41
Year 2 Month 10	Other Construction Equipment	2	10.00	130	0.42
Year 2 Month 10	Other Construction Equipment	1	10.00	407	0.42
Year 3 Month 4	Cranes	1	10.00	226	0.29
Year 3 Month 4	Other Construction Equipment	3	10.00	180	0.42
Year 3 Month 4	Other Construction Equipment	3	10.00	210	0.42

Year 3 Month 5	Cranes	1	10.00	226	0.29
Year 3 Month 5	Other Construction Equipment	3	10.00	180	0.42
Year 3 Month 5	Other Construction Equipment	3	10.00	210	0.42
Year 3 Month 6	Cranes	1	10.00	226	0.29
Year 3 Month 6	Other Construction Equipment	3	10.00	180	0.42
Year 3 Month 6	Other Construction Equipment	3	10.00	210	0.42
Year 3 Month 7	Other Construction Equipment	0	10.00	180	0.42
Year 3 Month 8	Crawler Tractors	1	10.00	585	0.43
Year 3 Month 8	Crawler Tractors	1	10.00	207	0.43
Year 3 Month 8	Crawler Tractors	4	10.00	232	0.43
Year 3 Month 8	Graders	1	10.00	259	0.41
Year 3 Month 8	Other Construction Equipment	2	10.00	130	0.42
Year 3 Month 8	Other Construction Equipment	1	10.00	407	0.42
Year 3 Month 9	Crawler Tractors	1	10.00	585	0.43
Year 3 Month 9	Crawler Tractors	1	10.00	207	0.43
Year 3 Month 9	Crawler Tractors	4	10.00	232	0.43
Year 3 Month 9	Graders	1	10.00	259	0.41
Year 3 Month 9	Other Construction Equipment	2	10.00	130	0.42
Year 3 Month 9	Other Construction Equipment	1	10.00	407	0.42
Year 3 Month 10	Crawler Tractors	1	10.00	585	0.43
Year 3 Month 10	Crawler Tractors	1	10.00	207	0.43
Year 3 Month 10	Crawler Tractors	4	10.00	232	0.43
Year 3 Month 10	Graders	1	10.00	259	0.41
Year 3 Month 10	Other Construction Equipment	2	10.00	130	0.42
Year 3 Month 10	Other Construction Equipment	1	10.00	407	0.42
Year 4 Month 1	Excavators	1	10.00	42	0.38
Year 4 Month 1	Excavators	1	10.00	176	0.38
Year 4 Month 1	Generator Sets	1	10.00	18	0.74

Year 4 Month 1	Other Construction Equipment	3	10.00	130	0.42
Year 4 Month 1	Other Construction Equipment	1	10.00	210	0.42
Year 4 Month 1	Plate Compactors	2	10.00	3	0.43
Year 4 Month 1	Plate Compactors	2	10.00	33	0.43
Year 4 Month 1	Rubber Tired Loaders	1	10.00	200	0.36
Year 4 Month 1	Tractors/Loaders/Backhoes	2	10.00	100	0.37
Year 4 Month 2	Air Compressors	1	10.00	50	0.48
Year 4 Month 2	Excavators	1	10.00	42	0.38
Year 4 Month 2	Excavators	1	10.00	176	0.38
Year 4 Month 2	Generator Sets	1	10.00	18	0.74
Year 4 Month 2	Other Construction Equipment	4	10.00	130	0.42
Year 4 Month 2	Other Construction Equipment	1	10.00	210	0.42
Year 4 Month 2	Plate Compactors	2	10.00	3	0.43
Year 4 Month 2	Plate Compactors	2	10.00	33	0.43
Year 4 Month 2	Rubber Tired Loaders	1	10.00	200	0.36
Year 4 Month 2	Tractors/Loaders/Backhoes	2	10.00	100	0.37
Year 4 Month 3	Air Compressors	1	10.00	50	0.48
Year 4 Month 3	Generator Sets	1	10.00	18	0.74
Year 4 Month 3	Other Construction Equipment	4	10.00	130	0.42
Year 4 Month 3	Other Construction Equipment	1	10.00	210	0.42
Year 4 Month 4	Aerial Lifts	1	10.00	24	0.31
Year 4 Month 4	Air Compressors	3	10.00	50	0.48
Year 4 Month 4	Cranes	1	10.00	226	0.29
Year 4 Month 4	Cranes	1	10.00	62	0.29
Year 4 Month 4	Cranes	1	10.00	150	0.29
Year 4 Month 4	Forklifts	2	10.00	73	0.20
Year 4 Month 4	Generator Sets	3	10.00	18	0.74
Year 4 Month 4	Other Construction Equipment	4	10.00	180	0.42

Year 4 Month 4	Other Construction Equipment	5	10.00	210	0.42
Year 4 Month 4	Other Construction Equipment	2	10.00	50	0.42
Year 4 Month 4	Other Construction Equipment	2	10.00	305	0.42
Year 4 Month 4	Other Construction Equipment	3	10.00	130	0.42
Year 4 Month 4	Other Construction Equipment	1	10.00	273	0.42
Year 4 Month 4	Plate Compactors	1	10.00	14	0.43
Year 4 Month 4	Plate Compactors	1	10.00	3	0.43
Year 4 Month 4	Rubber Tired Loaders	1	10.00	125	0.36
Year 4 Month 4	Skid Steer Loaders	1	10.00	45	0.37
Year 4 Month 4	Tractors/Loaders/Backhoes	1	10.00	67	0.37
Year 4 Month 4	Welders	2	10.00	48	0.45
Year 4 Month 5	Aerial Lifts	1	10.00	24	0.31
Year 4 Month 5	Air Compressors	3	10.00	50	0.48
Year 4 Month 5	Concrete/Industrial Saws	1	10.00	6	0.73
Year 4 Month 5	Concrete/Industrial Saws	1	10.00	20	0.73
Year 4 Month 5	Concrete/Industrial Saws	1	10.00	8	0.73
Year 4 Month 5	Cranes	1	10.00	62	0.29
Year 4 Month 5	Cranes	1	10.00	150	0.29
Year 4 Month 5	Forklifts	2	10.00	73	0.20
Year 4 Month 5	Generator Sets	3	10.00	18	0.74
Year 4 Month 5	Other Construction Equipment	3	10.00	180	0.42
Year 4 Month 5	Other Construction Equipment	4	10.00	210	0.42
Year 4 Month 5	Other Construction Equipment	2	10.00	50	0.42
Year 4 Month 5	Other Construction Equipment	2	10.00	305	0.42
Year 4 Month 5	Other Construction Equipment	2	10.00	130	0.42
Year 4 Month 5	Other Construction Equipment	1	10.00	273	0.42
Year 4 Month 5	Plate Compactors	1	10.00	33	0.43
Year 4 Month 5	Plate Compactors	1	10.00	14	0.43

Year 4 Month 5	Plate Compactors	3	10.00	3	0.43
Year 4 Month 5	Rubber Tired Loaders	1	10.00	125	0.36
Year 4 Month 5	Rubber Tired Loaders	1	10.00	200	0.36
Year 4 Month 5	Skid Steer Loaders	1	10.00	45	0.37
Year 4 Month 5	Tractors/Loaders/Backhoes	1	10.00	67	0.37
Year 4 Month 5	Tractors/Loaders/Backhoes	1	10.00	100	0.37
Year 4 Month 5	Welders	4	10.00	48	0.45
Year 4 Month 6	Aerial Lifts	1	10.00	24	0.31
Year 4 Month 6	Air Compressors	3	10.00	50	0.48
Year 4 Month 6	Concrete/Industrial Saws	1	10.00	6	0.73
Year 4 Month 6	Concrete/Industrial Saws	1	10.00	20	0.73
Year 4 Month 6	Concrete/Industrial Saws	1	10.00	8	0.73
Year 4 Month 6	Cranes	2	10.00	62	0.29
Year 4 Month 6	Cranes	1	10.00	150	0.29
Year 4 Month 6	Forklifts	2	10.00	73	0.20
Year 4 Month 6	Generator Sets	3	10.00	18	0.74
Year 4 Month 6	Other Construction Equipment	3	10.00	180	0.42
Year 4 Month 6	Other Construction Equipment	4	10.00	210	0.42
Year 4 Month 6	Other Construction Equipment	2	10.00	50	0.42
Year 4 Month 6	Other Construction Equipment	3	10.00	305	0.42
Year 4 Month 6	Other Construction Equipment	2	10.00	130	0.42
Year 4 Month 6	Other Construction Equipment	1	10.00	273	0.42
Year 4 Month 6	Plate Compactors	1	10.00	33	0.43
Year 4 Month 6	Plate Compactors	1	10.00	14	0.43
Year 4 Month 6	Plate Compactors	3	10.00	3	0.43
Year 4 Month 6	Rubber Tired Loaders	1	10.00	125	0.36
Year 4 Month 6	Rubber Tired Loaders	1	10.00	200	0.36
Year 4 Month 6	Skid Steer Loaders	1	10.00	45	0.37

Year 4 Month 6	Tractors/Loaders/Backhoes	1	10.00	67	0.37
Year 4 Month 6	Tractors/Loaders/Backhoes	1	10.00	100	0.37
Year 4 Month 6	Welders	4	10.00	48	0.45
Year 4 Month 7	Aerial Lifts	1	10.00	24	0.31
Year 4 Month 7	Air Compressors	3	10.00	50	0.48
Year 4 Month 7	Cranes	3	10.00	62	0.29
Year 4 Month 7	Cranes	1	10.00	150	0.29
Year 4 Month 7	Forklifts	2	10.00	73	0.20
Year 4 Month 7	Generator Sets	3	10.00	18	0.74
Year 4 Month 7	Other Construction Equipment	3	10.00	180	0.42
Year 4 Month 7	Other Construction Equipment	4	10.00	210	0.42
Year 4 Month 7	Other Construction Equipment	2	10.00	50	0.42
Year 4 Month 7	Other Construction Equipment	3	10.00	305	0.42
Year 4 Month 7	Other Construction Equipment	2	10.00	130	0.42
Year 4 Month 7	Other Construction Equipment	1	10.00	273	0.42
Year 4 Month 7	Plate Compactors	1	10.00	14	0.43
Year 4 Month 7	Plate Compactors	1	10.00	3	0.43
Year 4 Month 7	Rubber Tired Loaders	1	10.00	125	0.36
Year 4 Month 7	Skid Steer Loaders	1	10.00	45	0.37
Year 4 Month 7	Tractors/Loaders/Backhoes	1	10.00	67	0.37
Year 4 Month 7	Welders	4	10.00	48	0.45
Year 4 Month 8	Aerial Lifts	1	10.00	24	0.31
Year 4 Month 8	Air Compressors	2	10.00	50	0.48
Year 4 Month 8	Cranes	3	10.00	62	0.29
Year 4 Month 8	Cranes	1	10.00	150	0.29
Year 4 Month 8	Crawler Tractors	4	10.00	232	0.43
Year 4 Month 8	Crawler Tractors	1	10.00	585	0.43
Year 4 Month 8	Crawler Tractors	1	10.00	207	0.43

Year 4 Month 8	Forklifts	2	10.00	73	0.20
Year 4 Month 8	Generator Sets	2	10.00	18	0.74
Year 4 Month 8	Graders	1	10.00	259	0.41
Year 4 Month 8	Other Construction Equipment	1	10.00	407	0.42
Year 4 Month 8	Other Construction Equipment	3	10.00	180	0.42
Year 4 Month 8	Other Construction Equipment	5	10.00	210	0.42
Year 4 Month 8	Other Construction Equipment	2	10.00	50	0.42
Year 4 Month 8	Other Construction Equipment	2	10.00	305	0.42
Year 4 Month 8	Other Construction Equipment	5	10.00	130	0.42
Year 4 Month 8	Other Construction Equipment	1	10.00	273	0.42
Year 4 Month 8	Plate Compactors	1	10.00	14	0.43
Year 4 Month 8	Plate Compactors	1	10.00	3	0.43
Year 4 Month 8	Rubber Tired Loaders	1	10.00	125	0.36
Year 4 Month 8	Skid Steer Loaders	1	10.00	45	0.37
Year 4 Month 8	Tractors/Loaders/Backhoes	1	10.00	67	0.37
Year 4 Month 8	Welders	4	10.00	48	0.45
Year 4 Month 9	Aerial Lifts	1	10.00	24	0.31
Year 4 Month 9	Air Compressors	2	10.00	50	0.48
Year 4 Month 9	Cranes	1	10.00	62	0.29
Year 4 Month 9	Cranes	1	10.00	150	0.29
Year 4 Month 9	Crawler Tractors	4	10.00	232	0.43
Year 4 Month 9	Crawler Tractors	1	10.00	585	0.43
Year 4 Month 9	Crawler Tractors	1	10.00	207	0.43
Year 4 Month 9	Forklifts	2	10.00	73	0.20
Year 4 Month 9	Generator Sets	2	10.00	18	0.74
Year 4 Month 9	Graders	1	10.00	259	0.41
Year 4 Month 9	Other Construction Equipment	1	10.00	407	0.42
Year 4 Month 9	Other Construction Equipment	3	10.00	180	0.42

Year 4 Month 9	Other Construction Equipment	4	10.00	210	0.42
Year 4 Month 9	Other Construction Equipment	2	10.00	50	0.42
Year 4 Month 9	Other Construction Equipment	2	10.00	305	0.42
Year 4 Month 9	Other Construction Equipment	5	10.00	130	0.42
Year 4 Month 9	Other Construction Equipment	1	10.00	273	0.42
Year 4 Month 9	Plate Compactors	1	10.00	14	0.43
Year 4 Month 9	Plate Compactors	1	10.00	3	0.43
Year 4 Month 9	Rubber Tired Loaders	1	10.00	125	0.36
Year 4 Month 9	Skid Steer Loaders	1	10.00	45	0.37
Year 4 Month 9	Tractors/Loaders/Backhoes	1	10.00	67	0.37
Year 4 Month 9	Welders	4	10.00	48	0.45
Year 4 Month 10	Aerial Lifts	1	10.00	24	0.31
Year 4 Month 10	Air Compressors	2	10.00	50	0.48
Year 4 Month 10	Cranes	1	10.00	62	0.29
Year 4 Month 10	Crawler Tractors	4	10.00	232	0.43
Year 4 Month 10	Crawler Tractors	1	10.00	585	0.43
Year 4 Month 10	Crawler Tractors	1	10.00	207	0.43
Year 4 Month 10	Forklifts	2	10.00	73	0.20
Year 4 Month 10	Generator Sets	2	10.00	18	0.74
Year 4 Month 10	Graders	1	10.00	259	0.41
Year 4 Month 10	Other Construction Equipment	1	10.00	407	0.42
Year 4 Month 10	Other Construction Equipment	3	10.00	180	0.42
Year 4 Month 10	Other Construction Equipment	4	10.00	210	0.42
Year 4 Month 10	Other Construction Equipment	1	10.00	50	0.42
Year 4 Month 10	Other Construction Equipment	5	10.00	130	0.42
Year 4 Month 10	Other Construction Equipment	1	10.00	273	0.42
Year 4 Month 10	Plate Compactors	1	10.00	3	0.43
Year 4 Month 10	Skid Steer Loaders	1	10.00	45	0.37

Year 4 Month 10	Tractors/Loaders/Backhoes	1	10.00	67	0.37
Year 4 Month 10	Welders	2	10.00	48	0.45
Year 4 Month 11	Aerial Lifts	1	10.00	60	0.31
Year 4 Month 11	Aerial Lifts	1	10.00	24	0.31
Year 4 Month 11	Air Compressors	2	10.00	50	0.48
Year 4 Month 11	Cranes	1	10.00	62	0.29
Year 4 Month 11	Forklifts	2	10.00	73	0.20
Year 4 Month 11	Generator Sets	2	10.00	18	0.74
Year 4 Month 11	Other Construction Equipment	2	10.00	180	0.42
Year 4 Month 11	Other Construction Equipment	3	10.00	210	0.42
Year 4 Month 11	Other Construction Equipment	1	10.00	50	0.42
Year 4 Month 11	Other Construction Equipment	2	10.00	130	0.42
Year 4 Month 11	Other Construction Equipment	1	10.00	273	0.42
Year 4 Month 11	Plate Compactors	1	10.00	3	0.43
Year 4 Month 11	Skid Steer Loaders	1	10.00	45	0.37
Year 4 Month 11	Tractors/Loaders/Backhoes	1	10.00	67	0.37
Year 4 Month 11	Welders	3	10.00	18	0.45
Year 4 Month 11	Welders	1	10.00	48	0.45
Year 4 Month 12	Aerial Lifts	1	10.00	24	0.31
Year 4 Month 12	Air Compressors	1	10.00	50	0.48
Year 4 Month 12	Cranes	1	10.00	62	0.29
Year 4 Month 12	Forklifts	2	10.00	73	0.20
Year 4 Month 12	Generator Sets	1	10.00	18	0.74
Year 4 Month 12	Other Construction Equipment	2	10.00	180	0.42
Year 4 Month 12	Other Construction Equipment	3	10.00	210	0.42
Year 4 Month 12	Other Construction Equipment	1	10.00	50	0.42
Year 4 Month 12	Other Construction Equipment	1	10.00	273	0.42
Year 4 Month 12	Skid Steer Loaders	1	10.00	45	0.37

Year 4 Month 12	Tractors/Loaders/Backhoes	1	10.00	67	0.37
Year 4 Month 12	Welders	1	10.00	48	0.45

Trips and VMT

Phase Name	Offroad Equipment Count	Worker Trip Number	Vendor Trip Number	Hauling Trip Number	Worker Trip Length	Vendor Trip Length	Hauling Trip Length	Worker Vehicle Class	Vendor Vehicle Class	Hauling Vehicle Class
Year -3 Month 1	12	0.00	0.00	0.00	12.30	4.60	20.00	LD_Mix	HDT_Mix	HHDT
Year -3 Month 2	12	0.00	0.00	0.00	12.30	4.60	20.00	LD_Mix	HDT_Mix	HHDT
Year -3 Month 3	12	0.00	0.00	0.00	12.30	4.60	20.00	LD_Mix	HDT_Mix	HHDT
Year -3 Month 4	12	0.00	0.00	0.00	12.30	4.60	20.00	LD_Mix	HDT_Mix	HHDT
Year -3 Month 5	12	0.00	0.00	0.00	12.30	4.60	20.00	LD_Mix	HDT_Mix	HHDT
Year -3 Month 6	12	0.00	0.00	0.00	12.30	4.60	20.00	LD_Mix	HDT_Mix	HHDT
Year -3 Month 7	24	0.00	0.00	0.00	12.30	4.60	20.00	LD_Mix	HDT_Mix	HHDT
Year -3 Month 8	24	0.00	0.00	0.00	12.30	4.60	20.00	LD_Mix	HDT_Mix	HHDT
Year -3 Month 9	12	0.00	0.00	0.00	12.30	4.60	20.00	LD_Mix	HDT_Mix	HHDT
Year -3 Month 10	12	0.00	0.00	0.00	12.30	4.60	20.00	LD_Mix	HDT_Mix	HHDT
Year -3 Month 11	12	0.00	0.00	0.00	12.30	4.60	20.00	LD_Mix	HDT_Mix	HHDT
Year -3 Month 12	12	0.00	0.00	0.00	12.30	4.60	20.00	LD_Mix	HDT_Mix	HHDT
Year -2 Month 1	35	0.00	0.00	0.00	12.30	4.60	20.00	LD_Mix	HDT_Mix	HHDT
Year -2 Month 2	45	0.00	0.00	0.00	12.30	4.60	20.00	LD_Mix	HDT_Mix	HHDT
Year -2 Month 3	71	0.00	0.00	0.00	12.30	4.60	20.00	LD_Mix	HDT_Mix	HHDT
Year -2 Month 4	72	0.00	0.00	0.00	12.30	4.60	20.00	LD_Mix	HDT_Mix	HHDT
Year -2 Month 5	78	0.00	0.00	0.00	12.30	4.60	20.00	LD_Mix	HDT_Mix	HHDT
Year -2 Month 6	82	0.00	0.00	0.00	12.30	4.60	20.00	LD_Mix	HDT_Mix	HHDT
Year -2 Month 7	75	0.00	0.00	0.00	12.30	4.60	20.00	LD_Mix	HDT_Mix	HHDT
Year -2 Month 8	67	0.00	0.00	0.00	12.30	4.60	20.00	LD_Mix	HDT_Mix	HHDT
Year -2 Month 9	53	0.00	0.00	0.00	12.30	4.60	20.00	LD_Mix	HDT_Mix	HHDT
Year -2 Month 10	40	0.00	0.00	0.00	12.30	4.60	20.00	LD_Mix	HDT_Mix	HHDT

Year -2 Month 11	23	0.00	0.00	0.00	12.30	4.60	20.00	LD_Mix	HDT_Mix	HHDT
Year -2 Month 12	18	0.00	0.00	0.00	12.30	4.60	20.00	LD_Mix	HDT_Mix	HHDT
Year -1 Month 1	36	0.00	0.00	0.00	12.30	4.60	20.00	LD_Mix	HDT_Mix	HHDT
Year -1 Month 2	74	0.00	0.00	0.00	12.30	4.60	20.00	LD_Mix	HDT_Mix	HHDT
Year -1 Month 3	130	0.00	0.00	0.00	12.30	4.60	20.00	LD_Mix	HDT_Mix	HHDT
Year -1 Month 4	129	0.00	0.00	0.00	12.30	4.60	20.00	LD_Mix	HDT_Mix	HHDT
Year -1 Month 5	135	0.00	0.00	0.00	12.30	4.60	20.00	LD_Mix	HDT_Mix	HHDT
Year -1 Month 6	144	0.00	0.00	0.00	12.30	4.60	20.00	LD_Mix	HDT_Mix	HHDT
Year -1 Month 7	144	0.00	0.00	0.00	12.30	4.60	20.00	LD_Mix	HDT_Mix	HHDT
Year -1 Month 8	122	0.00	0.00	0.00	12.30	4.60	20.00	LD_Mix	HDT_Mix	HHDT
Year -1 Month 9	109	0.00	0.00	0.00	12.30	4.60	20.00	LD_Mix	HDT_Mix	HHDT
Year -1 Month 10	71	0.00	0.00	0.00	12.30	4.60	20.00	LD_Mix	HDT_Mix	HHDT
Year -1 Month 11	54	0.00	0.00	0.00	12.30	4.60	20.00	LD_Mix	HDT_Mix	HHDT
Year -1 Month 12	26	0.00	0.00	0.00	12.30	4.60	20.00	LD_Mix	HDT_Mix	HHDT
Year 1 Month 1	5	0.00	0.00	0.00	12.30	4.60	20.00	LD_Mix	HDT_Mix	HHDT
Year 1 Month 2	15	0.00	0.00	0.00	12.30	4.60	20.00	LD_Mix	HDT_Mix	HHDT
Year 1 Month 3	10	0.00	0.00	0.00	12.30	4.60	20.00	LD_Mix	HDT_Mix	HHDT
Year 1 Month 4	17	0.00	0.00	0.00	12.30	4.60	20.00	LD_Mix	HDT_Mix	HHDT
Year 1 Month 5	17	0.00	0.00	0.00	12.30	4.60	20.00	LD_Mix	HDT_Mix	HHDT
Year 1 Month 6	15	0.00	0.00	0.00	12.30	4.60	20.00	LD_Mix	HDT_Mix	HHDT
Year 1 Month 7	17	0.00	0.00	0.00	12.30	4.60	20.00	LD_Mix	HDT_Mix	HHDT
Year 1 Month 8	17	0.00	0.00	0.00	12.30	4.60	20.00	LD_Mix	HDT_Mix	HHDT
Year 1 Month 9	9	0.00	0.00	0.00	12.30	4.60	20.00	LD_Mix	HDT_Mix	HHDT
Year 1 Month 10	9	0.00	0.00	0.00	12.30	4.60	20.00	LD_Mix	HDT_Mix	HHDT
Year 1 Month 11				0.00	12.30	4.60				
Year 1 Month 12				0.00	12.30	4.60				
Year 2 Month 1	5	0.00	0.00	0.00	12.30	4.60	20.00	LD_Mix	HDT_Mix	HHDT
Year 2 Month 2	15	0.00	0.00	0.00	12.30	4.60	20.00	LD_Mix	HDT_Mix	HHDT

Year 2 Month 3	15	0.00	0.00	0.00	12.30	4.60	20.00	LD_Mix	HDT_Mix	HHDT
Year 2 Month 4	22	0.00	0.00	0.00	12.30	4.60	20.00	LD_Mix	HDT_Mix	HHDT
Year 2 Month 5	15	0.00	0.00	0.00	12.30	4.60	20.00	LD_Mix	HDT_Mix	HHDT
Year 2 Month 6	15	0.00	0.00	0.00	12.30	4.60	20.00	LD_Mix	HDT_Mix	HHDT
Year 2 Month 7	8	0.00	0.00	0.00	12.30	4.60	20.00	LD_Mix	HDT_Mix	HHDT
Year 2 Month 8	18	0.00	0.00	0.00	12.30	4.60	20.00	LD_Mix	HDT_Mix	HHDT
Year 2 Month 9	10	0.00	0.00	0.00	12.30	4.60	20.00	LD_Mix	HDT_Mix	HHDT
Year 2 Month 10	10	0.00	0.00	0.00	12.30	4.60	20.00	LD_Mix	HDT_Mix	HHDT
Year 2 Month 11				0.00	12.30	4.60				
Year 2 Month 12				0.00	12.30	4.60				
Year 3 Month 1				0.00	12.30	4.60				
Year 3 Month 2				0.00	12.30	4.60				
Year 3 Month 3				0.00	12.30	4.60				
Year 3 Month 4	7	0.00	0.00	0.00	12.30	4.60	20.00	LD_Mix	HDT_Mix	HHDT
Year 3 Month 5	7	0.00	0.00	0.00	12.30	4.60	20.00	LD_Mix	HDT_Mix	HHDT
Year 3 Month 6	7	0.00	0.00	0.00	12.30	4.60	20.00	LD_Mix	HDT_Mix	HHDT
Year 3 Month 7	0	0.00	0.00	0.00	12.30	4.60	20.00	LD_Mix	HDT_Mix	HHDT
Year 3 Month 8	10	0.00	0.00	0.00	12.30	4.60	20.00	LD_Mix	HDT_Mix	HHDT
Year 3 Month 9	10	0.00	0.00	0.00	12.30	4.60	20.00	LD_Mix	HDT_Mix	HHDT
Year 3 Month 10	10	0.00	0.00	0.00	12.30	4.60	20.00	LD_Mix	HDT_Mix	HHDT
Year 3 Month 11				0.00	12.30	4.60				
Year 3 Month 12				0.00	12.30	4.60				
Year 4 Month 1	14	0.00	0.00	0.00	12.30	4.60	20.00	LD_Mix	HDT_Mix	HHDT
Year 4 Month 2	16	0.00	0.00	0.00	12.30	4.60	20.00	LD_Mix	HDT_Mix	HHDT
Year 4 Month 3	7	0.00	0.00	0.00	12.30	4.60	20.00	LD_Mix	HDT_Mix	HHDT
Year 4 Month 4	36	0.00	0.00	0.00	12.30	4.60	20.00	LD_Mix	HDT_Mix	HHDT
Year 4 Month 5	42	0.00	0.00	0.00	12.30	4.60	20.00	LD_Mix	HDT_Mix	HHDT
Year 4 Month 6	44	0.00	0.00	0.00	12.30	4.60	20.00	LD_Mix	HDT_Mix	HHDT

Year 4 Month 7	37	0.00	0.00	0.00	12.30	4.60	20.00	LD_Mix	HDT_Mix	HHDT
Year 4 Month 8	46	0.00	0.00	0.00	12.30	4.60	20.00	LD_Mix	HDT_Mix	HHDT
Year 4 Month 9	43	0.00	0.00	0.00	12.30	4.60	20.00	LD_Mix	HDT_Mix	HHDT
Year 4 Month 10	35	0.00	0.00	0.00	12.30	4.60	20.00	LD_Mix	HDT_Mix	HHDT
Year 4 Month 11	25	0.00	0.00	0.00	12.30	4.60	20.00	LD_Mix	HDT_Mix	HHDT
Year 4 Month 12	16	0.00	0.00	0.00	12.30	4.60	20.00	LD_Mix	HDT_Mix	HHDT

3.1 Mitigation Measures Construction

Use Cleaner Engines for Construction Equipment

3.2 Year -3 Month 1 - 2017

Unmitigated Construction On-Site

	ROG	NOx	CO	SO2	Fugitive PM10	Exhaust PM10	PM10 Total	Fugitive PM2.5	Exhaust PM2.5	PM2.5 Total	Bio- CO2	NBio- CO2	Total CO2	CH4	N2O	CO2e
Category	tons/yr										MT/yr					
Off-Road	0.1342	1.6893	0.6757	1.6800e-003		0.0678	0.0678		0.0624	0.0624	0.0000	155.1954	155.1954	0.0472	0.0000	156.1863
Total	**0.1342**	**1.6893**	**0.6757**	**1.6800e-003**		**0.0678**	**0.0678**		**0.0624**	**0.0624**	**0.0000**	**155.1954**	**155.1954**	**0.0472**	**0.0000**	**156.1863**

3.2 Year -3 Month 1 - 2017

Unmitigated Construction Off-Site

	ROG	NOx	CO	SO2	Fugitive PM10	Exhaust PM10	PM10 Total	Fugitive PM2.5	Exhaust PM2.5	PM2.5 Total	Bio- CO2	NBio- CO2	Total CO2	CH4	N2O	CO2e
Category	tons/yr										MT/yr					
Hauling	0.0000	0.0000	0.0000	0.0000	0.0000	0.0000	0.0000	0.0000	0.0000	0.0000	0.0000	0.0000	0.0000	0.0000	0.0000	0.0000
Vendor	0.0000	0.0000	0.0000	0.0000	0.0000	0.0000	0.0000	0.0000	0.0000	0.0000	0.0000	0.0000	0.0000	0.0000	0.0000	0.0000
Worker	0.0000	0.0000	0.0000	0.0000	0.0000	0.0000	0.0000	0.0000	0.0000	0.0000	0.0000	0.0000	0.0000	0.0000	0.0000	0.0000
Total	**0.0000**	**0.0000**	**0.0000**	**0.0000**	**0.0000**	**0.0000**	**0.0000**	**0.0000**	**0.0000**	**0.0000**	**0.0000**	**0.0000**	**0.0000**	**0.0000**	**0.0000**	**0.0000**

Mitigated Construction On-Site

	ROG	NOx	CO	SO2	Fugitive PM10	Exhaust PM10	PM10 Total	Fugitive PM2.5	Exhaust PM2.5	PM2.5 Total	Bio- CO2	NBio- CO2	Total CO2	CH4	N2O	CO2e
Category	tons/yr										MT/yr					
Off-Road	0.0203	0.0880	0.8148	1.6800e-003		2.7100e-003	2.7100e-003		2.7100e-003	2.7100e-003	0.0000	155.1952	155.1952	0.0472	0.0000	156.1861
Total	**0.0203**	**0.0880**	**0.8148**	**1.6800e-003**		**2.7100e-003**	**2.7100e-003**		**2.7100e-003**	**2.7100e-003**	**0.0000**	**155.1952**	**155.1952**	**0.0472**	**0.0000**	**156.1861**

3.2 Year -3 Month 1 - 2017

Mitigated Construction Off-Site

	ROG	NOx	CO	SO2	Fugitive PM10	Exhaust PM10	PM10 Total	Fugitive PM2.5	Exhaust PM2.5	PM2.5 Total	Bio- CO2	NBio- CO2	Total CO2	CH4	N2O	CO2e
Category	tons/yr										MT/yr					
Hauling	0.0000	0.0000	0.0000	0.0000	0.0000	0.0000	0.0000	0.0000	0.0000	0.0000	0.0000	0.0000	0.0000	0.0000	0.0000	0.0000
Vendor	0.0000	0.0000	0.0000	0.0000	0.0000	0.0000	0.0000	0.0000	0.0000	0.0000	0.0000	0.0000	0.0000	0.0000	0.0000	0.0000
Worker	0.0000	0.0000	0.0000	0.0000	0.0000	0.0000	0.0000	0.0000	0.0000	0.0000	0.0000	0.0000	0.0000	0.0000	0.0000	0.0000
Total	**0.0000**	**0.0000**	**0.0000**	**0.0000**	**0.0000**	**0.0000**	**0.0000**	**0.0000**	**0.0000**	**0.0000**	**0.0000**	**0.0000**	**0.0000**	**0.0000**	**0.0000**	**0.0000**

3.3 Year -3 Month 2 - 2017

Unmitigated Construction On-Site

	ROG	NOx	CO	SO2	Fugitive PM10	Exhaust PM10	PM10 Total	Fugitive PM2.5	Exhaust PM2.5	PM2.5 Total	Bio- CO2	NBio- CO2	Total CO2	CH4	N2O	CO2e
Category	tons/yr										MT/yr					
Off-Road	0.1239	1.5594	0.6238	1.5500e-003		0.0626	0.0626		0.0576	0.0576	0.0000	143.2573	143.2573	0.0436	0.0000	144.1719
Total	**0.1239**	**1.5594**	**0.6238**	**1.5500e-003**		**0.0626**	**0.0626**		**0.0576**	**0.0576**	**0.0000**	**143.2573**	**143.2573**	**0.0436**	**0.0000**	**144.1719**

3.3 Year -3 Month 2 - 2017

Unmitigated Construction Off-Site

	ROG	NOx	CO	SO2	Fugitive PM10	Exhaust PM10	PM10 Total	Fugitive PM2.5	Exhaust PM2.5	PM2.5 Total	Bio- CO2	NBio- CO2	Total CO2	CH4	N2O	CO2e
Category	tons/yr										MT/yr					
Hauling	0.0000	0.0000	0.0000	0.0000	0.0000	0.0000	0.0000	0.0000	0.0000	0.0000	0.0000	0.0000	0.0000	0.0000	0.0000	0.0000
Vendor	0.0000	0.0000	0.0000	0.0000	0.0000	0.0000	0.0000	0.0000	0.0000	0.0000	0.0000	0.0000	0.0000	0.0000	0.0000	0.0000
Worker	0.0000	0.0000	0.0000	0.0000	0.0000	0.0000	0.0000	0.0000	0.0000	0.0000	0.0000	0.0000	0.0000	0.0000	0.0000	0.0000
Total	**0.0000**	**0.0000**	**0.0000**	**0.0000**	**0.0000**	**0.0000**	**0.0000**	**0.0000**	**0.0000**	**0.0000**	**0.0000**	**0.0000**	**0.0000**	**0.0000**	**0.0000**	**0.0000**

Mitigated Construction On-Site

	ROG	NOx	CO	SO2	Fugitive PM10	Exhaust PM10	PM10 Total	Fugitive PM2.5	Exhaust PM2.5	PM2.5 Total	Bio- CO2	NBio- CO2	Total CO2	CH4	N2O	CO2e
Category	tons/yr										MT/yr					
Off-Road	0.0187	0.0812	0.7521	1.5500e-003		2.5000e-003	2.5000e-003		2.5000e-003	2.5000e-003	0.0000	143.2571	143.2571	0.0436	0.0000	144.1718
Total	**0.0187**	**0.0812**	**0.7521**	**1.5500e-003**		**2.5000e-003**	**2.5000e-003**		**2.5000e-003**	**2.5000e-003**	**0.0000**	**143.2571**	**143.2571**	**0.0436**	**0.0000**	**144.1718**

3.3 Year -3 Month 2 - 2017

Mitigated Construction Off-Site

	ROG	NOx	CO	SO2	Fugitive PM10	Exhaust PM10	PM10 Total	Fugitive PM2.5	Exhaust PM2.5	PM2.5 Total	Bio- CO2	NBio- CO2	Total CO2	CH4	N2O	CO2e
Category	tons/yr										MT/yr					
Hauling	0.0000	0.0000	0.0000	0.0000	0.0000	0.0000	0.0000	0.0000	0.0000	0.0000	0.0000	0.0000	0.0000	0.0000	0.0000	0.0000
Vendor	0.0000	0.0000	0.0000	0.0000	0.0000	0.0000	0.0000	0.0000	0.0000	0.0000	0.0000	0.0000	0.0000	0.0000	0.0000	0.0000
Worker	0.0000	0.0000	0.0000	0.0000	0.0000	0.0000	0.0000	0.0000	0.0000	0.0000	0.0000	0.0000	0.0000	0.0000	0.0000	0.0000
Total	**0.0000**	**0.0000**	**0.0000**	**0.0000**	**0.0000**	**0.0000**	**0.0000**	**0.0000**	**0.0000**	**0.0000**	**0.0000**	**0.0000**	**0.0000**	**0.0000**	**0.0000**	**0.0000**

3.4 Year -3 Month 3 - 2017

Unmitigated Construction On-Site

	ROG	NOx	CO	SO2	Fugitive PM10	Exhaust PM10	PM10 Total	Fugitive PM2.5	Exhaust PM2.5	PM2.5 Total	Bio- CO2	NBio- CO2	Total CO2	CH4	N2O	CO2e
Category	tons/yr										MT/yr					
Off-Road	0.1394	1.7543	0.7017	1.7400e-003		0.0704	0.0704		0.0648	0.0648	0.0000	161.1645	161.1645	0.0490	0.0000	162.1934
Total	**0.1394**	**1.7543**	**0.7017**	**1.7400e-003**		**0.0704**	**0.0704**		**0.0648**	**0.0648**	**0.0000**	**161.1645**	**161.1645**	**0.0490**	**0.0000**	**162.1934**

3.4 Year -3 Month 3 - 2017

Unmitigated Construction Off-Site

	ROG	NOx	CO	SO2	Fugitive PM10	Exhaust PM10	PM10 Total	Fugitive PM2.5	Exhaust PM2.5	PM2.5 Total	Bio- CO2	NBio- CO2	Total CO2	CH4	N2O	CO2e
Category	tons/yr										MT/yr					
Hauling	0.0000	0.0000	0.0000	0.0000	0.0000	0.0000	0.0000	0.0000	0.0000	0.0000	0.0000	0.0000	0.0000	0.0000	0.0000	0.0000
Vendor	0.0000	0.0000	0.0000	0.0000	0.0000	0.0000	0.0000	0.0000	0.0000	0.0000	0.0000	0.0000	0.0000	0.0000	0.0000	0.0000
Worker	0.0000	0.0000	0.0000	0.0000	0.0000	0.0000	0.0000	0.0000	0.0000	0.0000	0.0000	0.0000	0.0000	0.0000	0.0000	0.0000
Total	**0.0000**	**0.0000**	**0.0000**	**0.0000**	**0.0000**	**0.0000**	**0.0000**	**0.0000**	**0.0000**	**0.0000**	**0.0000**	**0.0000**	**0.0000**	**0.0000**	**0.0000**	**0.0000**

Mitigated Construction On-Site

	ROG	NOx	CO	SO2	Fugitive PM10	Exhaust PM10	PM10 Total	Fugitive PM2.5	Exhaust PM2.5	PM2.5 Total	Bio- CO2	NBio- CO2	Total CO2	CH4	N2O	CO2e
Category	tons/yr										MT/yr					
Off-Road	0.0211	0.0914	0.8461	1.7400e-003		2.8100e-003	2.8100e-003		2.8100e-003	2.8100e-003	0.0000	161.1643	161.1643	0.0490	0.0000	162.1932
Total	**0.0211**	**0.0914**	**0.8461**	**1.7400e-003**		**2.8100e-003**	**2.8100e-003**		**2.8100e-003**	**2.8100e-003**	**0.0000**	**161.1643**	**161.1643**	**0.0490**	**0.0000**	**162.1932**

3.4 Year -3 Month 3 - 2017

Mitigated Construction Off-Site

	ROG	NOx	CO	SO2	Fugitive PM10	Exhaust PM10	PM10 Total	Fugitive PM2.5	Exhaust PM2.5	PM2.5 Total	Bio- CO2	NBio- CO2	Total CO2	CH4	N2O	CO2e
Category	tons/yr										MT/yr					
Hauling	0.0000	0.0000	0.0000	0.0000	0.0000	0.0000	0.0000	0.0000	0.0000	0.0000	0.0000	0.0000	0.0000	0.0000	0.0000	0.0000
Vendor	0.0000	0.0000	0.0000	0.0000	0.0000	0.0000	0.0000	0.0000	0.0000	0.0000	0.0000	0.0000	0.0000	0.0000	0.0000	0.0000
Worker	0.0000	0.0000	0.0000	0.0000	0.0000	0.0000	0.0000	0.0000	0.0000	0.0000	0.0000	0.0000	0.0000	0.0000	0.0000	0.0000
Total	**0.0000**	**0.0000**	**0.0000**	**0.0000**	**0.0000**	**0.0000**	**0.0000**	**0.0000**	**0.0000**	**0.0000**	**0.0000**	**0.0000**	**0.0000**	**0.0000**	**0.0000**	**0.0000**

3.5 Year -3 Month 4 - 2017

Unmitigated Construction On-Site

	ROG	NOx	CO	SO2	Fugitive PM10	Exhaust PM10	PM10 Total	Fugitive PM2.5	Exhaust PM2.5	PM2.5 Total	Bio- CO2	NBio- CO2	Total CO2	CH4	N2O	CO2e
Category	tons/yr										MT/yr					
Off-Road	0.1291	1.6244	0.6497	1.6100e-003		0.0652	0.0652		0.0600	0.0600	0.0000	149.2263	149.2263	0.0454	0.0000	150.1791
Total	**0.1291**	**1.6244**	**0.6497**	**1.6100e-003**		**0.0652**	**0.0652**		**0.0600**	**0.0600**	**0.0000**	**149.2263**	**149.2263**	**0.0454**	**0.0000**	**150.1791**

3.5 Year -3 Month 4 - 2017

Unmitigated Construction Off-Site

	ROG	NOx	CO	SO2	Fugitive PM10	Exhaust PM10	PM10 Total	Fugitive PM2.5	Exhaust PM2.5	PM2.5 Total	Bio- CO2	NBio- CO2	Total CO2	CH4	N2O	CO2e
Category	tons/yr										MT/yr					
Hauling	0.0000	0.0000	0.0000	0.0000	0.0000	0.0000	0.0000	0.0000	0.0000	0.0000	0.0000	0.0000	0.0000	0.0000	0.0000	0.0000
Vendor	0.0000	0.0000	0.0000	0.0000	0.0000	0.0000	0.0000	0.0000	0.0000	0.0000	0.0000	0.0000	0.0000	0.0000	0.0000	0.0000
Worker	0.0000	0.0000	0.0000	0.0000	0.0000	0.0000	0.0000	0.0000	0.0000	0.0000	0.0000	0.0000	0.0000	0.0000	0.0000	0.0000
Total	**0.0000**	**0.0000**	**0.0000**	**0.0000**	**0.0000**	**0.0000**	**0.0000**	**0.0000**	**0.0000**	**0.0000**	**0.0000**	**0.0000**	**0.0000**	**0.0000**	**0.0000**	**0.0000**

Mitigated Construction On-Site

	ROG	NOx	CO	SO2	Fugitive PM10	Exhaust PM10	PM10 Total	Fugitive PM2.5	Exhaust PM2.5	PM2.5 Total	Bio- CO2	NBio- CO2	Total CO2	CH4	N2O	CO2e
Category	tons/yr										MT/yr					
Off-Road	0.0195	0.0846	0.7834	1.6100e-003		2.6000e-003	2.6000e-003		2.6000e-003	2.6000e-003	0.0000	149.2262	149.2262	0.0454	0.0000	150.1789
Total	**0.0195**	**0.0846**	**0.7834**	**1.6100e-003**		**2.6000e-003**	**2.6000e-003**		**2.6000e-003**	**2.6000e-003**	**0.0000**	**149.2262**	**149.2262**	**0.0454**	**0.0000**	**150.1789**

3.5 Year -3 Month 4 - 2017

Mitigated Construction Off-Site

	ROG	NOx	CO	SO2	Fugitive PM10	Exhaust PM10	PM10 Total	Fugitive PM2.5	Exhaust PM2.5	PM2.5 Total	Bio- CO2	NBio- CO2	Total CO2	CH4	N2O	CO2e
Category	tons/yr										MT/yr					
Hauling	0.0000	0.0000	0.0000	0.0000	0.0000	0.0000	0.0000	0.0000	0.0000	0.0000	0.0000	0.0000	0.0000	0.0000	0.0000	0.0000
Vendor	0.0000	0.0000	0.0000	0.0000	0.0000	0.0000	0.0000	0.0000	0.0000	0.0000	0.0000	0.0000	0.0000	0.0000	0.0000	0.0000
Worker	0.0000	0.0000	0.0000	0.0000	0.0000	0.0000	0.0000	0.0000	0.0000	0.0000	0.0000	0.0000	0.0000	0.0000	0.0000	0.0000
Total	**0.0000**	**0.0000**	**0.0000**	**0.0000**	**0.0000**	**0.0000**	**0.0000**	**0.0000**	**0.0000**	**0.0000**	**0.0000**	**0.0000**	**0.0000**	**0.0000**	**0.0000**	**0.0000**

3.6 Year -3 Month 5 - 2017

Unmitigated Construction On-Site

	ROG	NOx	CO	SO2	Fugitive PM10	Exhaust PM10	PM10 Total	Fugitive PM2.5	Exhaust PM2.5	PM2.5 Total	Bio- CO2	NBio- CO2	Total CO2	CH4	N2O	CO2e
Category	tons/yr										MT/yr					
Off-Road	0.1394	1.7543	0.7017	1.7400e-003		0.0704	0.0704		0.0648	0.0648	0.0000	161.1645	161.1645	0.0490	0.0000	162.1934
Total	**0.1394**	**1.7543**	**0.7017**	**1.7400e-003**		**0.0704**	**0.0704**		**0.0648**	**0.0648**	**0.0000**	**161.1645**	**161.1645**	**0.0490**	**0.0000**	**162.1934**

3.6 Year -3 Month 5 - 2017

Unmitigated Construction Off-Site

	ROG	NOx	CO	SO2	Fugitive PM10	Exhaust PM10	PM10 Total	Fugitive PM2.5	Exhaust PM2.5	PM2.5 Total	Bio- CO2	NBio- CO2	Total CO2	CH4	N2O	CO2e
Category	tons/yr										MT/yr					
Hauling	0.0000	0.0000	0.0000	0.0000	0.0000	0.0000	0.0000	0.0000	0.0000	0.0000	0.0000	0.0000	0.0000	0.0000	0.0000	0.0000
Vendor	0.0000	0.0000	0.0000	0.0000	0.0000	0.0000	0.0000	0.0000	0.0000	0.0000	0.0000	0.0000	0.0000	0.0000	0.0000	0.0000
Worker	0.0000	0.0000	0.0000	0.0000	0.0000	0.0000	0.0000	0.0000	0.0000	0.0000	0.0000	0.0000	0.0000	0.0000	0.0000	0.0000
Total	**0.0000**	**0.0000**	**0.0000**	**0.0000**	**0.0000**	**0.0000**	**0.0000**	**0.0000**	**0.0000**	**0.0000**	**0.0000**	**0.0000**	**0.0000**	**0.0000**	**0.0000**	**0.0000**

Mitigated Construction On-Site

	ROG	NOx	CO	SO2	Fugitive PM10	Exhaust PM10	PM10 Total	Fugitive PM2.5	Exhaust PM2.5	PM2.5 Total	Bio- CO2	NBio- CO2	Total CO2	CH4	N2O	CO2e
Category	tons/yr										MT/yr					
Off-Road	0.0211	0.0914	0.8461	1.7400e-003		2.8100e-003	2.8100e-003		2.8100e-003	2.8100e-003	0.0000	161.1643	161.1643	0.0490	0.0000	162.1932
Total	**0.0211**	**0.0914**	**0.8461**	**1.7400e-003**		**2.8100e-003**	**2.8100e-003**		**2.8100e-003**	**2.8100e-003**	**0.0000**	**161.1643**	**161.1643**	**0.0490**	**0.0000**	**162.1932**

3.6 Year -3 Month 5 - 2017

Mitigated Construction Off-Site

	ROG	NOx	CO	SO2	Fugitive PM10	Exhaust PM10	PM10 Total	Fugitive PM2.5	Exhaust PM2.5	PM2.5 Total	Bio- CO2	NBio- CO2	Total CO2	CH4	N2O	CO2e
Category	tons/yr										MT/yr					
Hauling	0.0000	0.0000	0.0000	0.0000	0.0000	0.0000	0.0000	0.0000	0.0000	0.0000	0.0000	0.0000	0.0000	0.0000	0.0000	0.0000
Vendor	0.0000	0.0000	0.0000	0.0000	0.0000	0.0000	0.0000	0.0000	0.0000	0.0000	0.0000	0.0000	0.0000	0.0000	0.0000	0.0000
Worker	0.0000	0.0000	0.0000	0.0000	0.0000	0.0000	0.0000	0.0000	0.0000	0.0000	0.0000	0.0000	0.0000	0.0000	0.0000	0.0000
Total	**0.0000**	**0.0000**	**0.0000**	**0.0000**	**0.0000**	**0.0000**	**0.0000**	**0.0000**	**0.0000**	**0.0000**	**0.0000**	**0.0000**	**0.0000**	**0.0000**	**0.0000**	**0.0000**

3.7 Year -3 Month 6 - 2017

Unmitigated Construction On-Site

	ROG	NOx	CO	SO2	Fugitive PM10	Exhaust PM10	PM10 Total	Fugitive PM2.5	Exhaust PM2.5	PM2.5 Total	Bio- CO2	NBio- CO2	Total CO2	CH4	N2O	CO2e
Category	tons/yr										MT/yr					
Off-Road	0.1342	1.6893	0.6757	1.6800e-003		0.0678	0.0678		0.0624	0.0624	0.0000	155.1954	155.1954	0.0472	0.0000	156.1863
Total	**0.1342**	**1.6893**	**0.6757**	**1.6800e-003**		**0.0678**	**0.0678**		**0.0624**	**0.0624**	**0.0000**	**155.1954**	**155.1954**	**0.0472**	**0.0000**	**156.1863**

3.7 Year -3 Month 6 - 2017

Unmitigated Construction Off-Site

	ROG	NOx	CO	SO2	Fugitive PM10	Exhaust PM10	PM10 Total	Fugitive PM2.5	Exhaust PM2.5	PM2.5 Total	Bio- CO2	NBio- CO2	Total CO2	CH4	N2O	CO2e
Category	tons/yr										MT/yr					
Hauling	0.0000	0.0000	0.0000	0.0000	0.0000	0.0000	0.0000	0.0000	0.0000	0.0000	0.0000	0.0000	0.0000	0.0000	0.0000	0.0000
Vendor	0.0000	0.0000	0.0000	0.0000	0.0000	0.0000	0.0000	0.0000	0.0000	0.0000	0.0000	0.0000	0.0000	0.0000	0.0000	0.0000
Worker	0.0000	0.0000	0.0000	0.0000	0.0000	0.0000	0.0000	0.0000	0.0000	0.0000	0.0000	0.0000	0.0000	0.0000	0.0000	0.0000
Total	**0.0000**	**0.0000**	**0.0000**	**0.0000**	**0.0000**	**0.0000**	**0.0000**	**0.0000**	**0.0000**	**0.0000**	**0.0000**	**0.0000**	**0.0000**	**0.0000**	**0.0000**	**0.0000**

Mitigated Construction On-Site

	ROG	NOx	CO	SO2	Fugitive PM10	Exhaust PM10	PM10 Total	Fugitive PM2.5	Exhaust PM2.5	PM2.5 Total	Bio- CO2	NBio- CO2	Total CO2	CH4	N2O	CO2e
Category	tons/yr										MT/yr					
Off-Road	0.0203	0.0880	0.8148	1.6800e-003		2.7100e-003	2.7100e-003		2.7100e-003	2.7100e-003	0.0000	155.1952	155.1952	0.0472	0.0000	156.1861
Total	**0.0203**	**0.0880**	**0.8148**	**1.6800e-003**		**2.7100e-003**	**2.7100e-003**		**2.7100e-003**	**2.7100e-003**	**0.0000**	**155.1952**	**155.1952**	**0.0472**	**0.0000**	**156.1861**

3.7 Year -3 Month 6 - 2017

Mitigated Construction Off-Site

	ROG	NOx	CO	SO2	Fugitive PM10	Exhaust PM10	PM10 Total	Fugitive PM2.5	Exhaust PM2.5	PM2.5 Total	Bio- CO2	NBio- CO2	Total CO2	CH4	N2O	CO2e
Category	tons/yr										MT/yr					
Hauling	0.0000	0.0000	0.0000	0.0000	0.0000	0.0000	0.0000	0.0000	0.0000	0.0000	0.0000	0.0000	0.0000	0.0000	0.0000	0.0000
Vendor	0.0000	0.0000	0.0000	0.0000	0.0000	0.0000	0.0000	0.0000	0.0000	0.0000	0.0000	0.0000	0.0000	0.0000	0.0000	0.0000
Worker	0.0000	0.0000	0.0000	0.0000	0.0000	0.0000	0.0000	0.0000	0.0000	0.0000	0.0000	0.0000	0.0000	0.0000	0.0000	0.0000
Total	**0.0000**	**0.0000**	**0.0000**	**0.0000**	**0.0000**	**0.0000**	**0.0000**	**0.0000**	**0.0000**	**0.0000**	**0.0000**	**0.0000**	**0.0000**	**0.0000**	**0.0000**	**0.0000**

3.8 Year -3 Month 7 - 2017

Unmitigated Construction On-Site

	ROG	NOx	CO	SO2	Fugitive PM10	Exhaust PM10	PM10 Total	Fugitive PM2.5	Exhaust PM2.5	PM2.5 Total	Bio- CO2	NBio- CO2	Total CO2	CH4	N2O	CO2e
Category	tons/yr										MT/yr					
Off-Road	0.2684	3.3787	1.3515	3.3600e-003		0.1356	0.1356		0.1249	0.1249	0.0000	310.3908	310.3908	0.0944	0.0000	312.3725
Total	**0.2684**	**3.3787**	**1.3515**	**3.3600e-003**		**0.1356**	**0.1356**		**0.1249**	**0.1249**	**0.0000**	**310.3908**	**310.3908**	**0.0944**	**0.0000**	**312.3725**

3.8 Year -3 Month 7 - 2017

Unmitigated Construction Off-Site

	ROG	NOx	CO	SO2	Fugitive PM10	Exhaust PM10	PM10 Total	Fugitive PM2.5	Exhaust PM2.5	PM2.5 Total	Bio- CO2	NBio- CO2	Total CO2	CH4	N2O	CO2e
Category	tons/yr										MT/yr					
Hauling	0.0000	0.0000	0.0000	0.0000	0.0000	0.0000	0.0000	0.0000	0.0000	0.0000	0.0000	0.0000	0.0000	0.0000	0.0000	0.0000
Vendor	0.0000	0.0000	0.0000	0.0000	0.0000	0.0000	0.0000	0.0000	0.0000	0.0000	0.0000	0.0000	0.0000	0.0000	0.0000	0.0000
Worker	0.0000	0.0000	0.0000	0.0000	0.0000	0.0000	0.0000	0.0000	0.0000	0.0000	0.0000	0.0000	0.0000	0.0000	0.0000	0.0000
Total	**0.0000**	**0.0000**	**0.0000**	**0.0000**	**0.0000**	**0.0000**	**0.0000**	**0.0000**	**0.0000**	**0.0000**	**0.0000**	**0.0000**	**0.0000**	**0.0000**	**0.0000**	**0.0000**

Mitigated Construction On-Site

	ROG	NOx	CO	SO2	Fugitive PM10	Exhaust PM10	PM10 Total	Fugitive PM2.5	Exhaust PM2.5	PM2.5 Total	Bio- CO2	NBio- CO2	Total CO2	CH4	N2O	CO2e
Category	tons/yr										MT/yr					
Off-Road	0.0406	0.1759	1.6295	3.3600e-003		5.4100e-003	5.4100e-003		5.4100e-003	5.4100e-003	0.0000	310.3904	310.3904	0.0944	0.0000	312.3722
Total	**0.0406**	**0.1759**	**1.6295**	**3.3600e-003**		**5.4100e-003**	**5.4100e-003**		**5.4100e-003**	**5.4100e-003**	**0.0000**	**310.3904**	**310.3904**	**0.0944**	**0.0000**	**312.3722**

3.8 Year -3 Month 7 - 2017

Mitigated Construction Off-Site

	ROG	NOx	CO	SO2	Fugitive PM10	Exhaust PM10	PM10 Total	Fugitive PM2.5	Exhaust PM2.5	PM2.5 Total	Bio- CO2	NBio- CO2	Total CO2	CH4	N2O	CO2e
Category	tons/yr										MT/yr					
Hauling	0.0000	0.0000	0.0000	0.0000	0.0000	0.0000	0.0000	0.0000	0.0000	0.0000	0.0000	0.0000	0.0000	0.0000	0.0000	0.0000
Vendor	0.0000	0.0000	0.0000	0.0000	0.0000	0.0000	0.0000	0.0000	0.0000	0.0000	0.0000	0.0000	0.0000	0.0000	0.0000	0.0000
Worker	0.0000	0.0000	0.0000	0.0000	0.0000	0.0000	0.0000	0.0000	0.0000	0.0000	0.0000	0.0000	0.0000	0.0000	0.0000	0.0000
Total	**0.0000**	**0.0000**	**0.0000**	**0.0000**	**0.0000**	**0.0000**	**0.0000**	**0.0000**	**0.0000**	**0.0000**	**0.0000**	**0.0000**	**0.0000**	**0.0000**	**0.0000**	**0.0000**

3.9 Year -3 Month 8 - 2017

Unmitigated Construction On-Site

	ROG	NOx	CO	SO2	Fugitive PM10	Exhaust PM10	PM10 Total	Fugitive PM2.5	Exhaust PM2.5	PM2.5 Total	Bio- CO2	NBio- CO2	Total CO2	CH4	N2O	CO2e
Category	tons/yr										MT/yr					
Off-Road	0.2788	3.5086	1.4034	3.4900e-003		0.1408	0.1408		0.1297	0.1297	0.0000	322.3289	322.3289	0.0980	0.0000	324.3869
Total	**0.2788**	**3.5086**	**1.4034**	**3.4900e-003**		**0.1408**	**0.1408**		**0.1297**	**0.1297**	**0.0000**	**322.3289**	**322.3289**	**0.0980**	**0.0000**	**324.3869**

3.9 Year -3 Month 8 - 2017

Unmitigated Construction Off-Site

	ROG	NOx	CO	SO2	Fugitive PM10	Exhaust PM10	PM10 Total	Fugitive PM2.5	Exhaust PM2.5	PM2.5 Total	Bio- CO2	NBio- CO2	Total CO2	CH4	N2O	CO2e
Category	tons/yr										MT/yr					
Hauling	0.0000	0.0000	0.0000	0.0000	0.0000	0.0000	0.0000	0.0000	0.0000	0.0000	0.0000	0.0000	0.0000	0.0000	0.0000	0.0000
Vendor	0.0000	0.0000	0.0000	0.0000	0.0000	0.0000	0.0000	0.0000	0.0000	0.0000	0.0000	0.0000	0.0000	0.0000	0.0000	0.0000
Worker	0.0000	0.0000	0.0000	0.0000	0.0000	0.0000	0.0000	0.0000	0.0000	0.0000	0.0000	0.0000	0.0000	0.0000	0.0000	0.0000
Total	**0.0000**	**0.0000**	**0.0000**	**0.0000**	**0.0000**	**0.0000**	**0.0000**	**0.0000**	**0.0000**	**0.0000**	**0.0000**	**0.0000**	**0.0000**	**0.0000**	**0.0000**	**0.0000**

Mitigated Construction On-Site

	ROG	NOx	CO	SO2	Fugitive PM10	Exhaust PM10	PM10 Total	Fugitive PM2.5	Exhaust PM2.5	PM2.5 Total	Bio- CO2	NBio- CO2	Total CO2	CH4	N2O	CO2e
Category	tons/yr										MT/yr					
Off-Road	0.0422	0.1827	1.6922	3.4900e-003		5.6200e-003	5.6200e-003		5.6200e-003	5.6200e-003	0.0000	322.3285	322.3285	0.0980	0.0000	324.3865
Total	**0.0422**	**0.1827**	**1.6922**	**3.4900e-003**		**5.6200e-003**	**5.6200e-003**		**5.6200e-003**	**5.6200e-003**	**0.0000**	**322.3285**	**322.3285**	**0.0980**	**0.0000**	**324.3865**

3.9 Year -3 Month 8 - 2017

Mitigated Construction Off-Site

	ROG	NOx	CO	SO2	Fugitive PM10	Exhaust PM10	PM10 Total	Fugitive PM2.5	Exhaust PM2.5	PM2.5 Total	Bio- CO2	NBio- CO2	Total CO2	CH4	N2O	CO2e
Category	tons/yr										MT/yr					
Hauling	0.0000	0.0000	0.0000	0.0000	0.0000	0.0000	0.0000	0.0000	0.0000	0.0000	0.0000	0.0000	0.0000	0.0000	0.0000	0.0000
Vendor	0.0000	0.0000	0.0000	0.0000	0.0000	0.0000	0.0000	0.0000	0.0000	0.0000	0.0000	0.0000	0.0000	0.0000	0.0000	0.0000
Worker	0.0000	0.0000	0.0000	0.0000	0.0000	0.0000	0.0000	0.0000	0.0000	0.0000	0.0000	0.0000	0.0000	0.0000	0.0000	0.0000
Total	**0.0000**	**0.0000**	**0.0000**	**0.0000**	**0.0000**	**0.0000**	**0.0000**	**0.0000**	**0.0000**	**0.0000**	**0.0000**	**0.0000**	**0.0000**	**0.0000**	**0.0000**	**0.0000**

3.10 Year -3 Month 9 - 2017

Unmitigated Construction On-Site

	ROG	NOx	CO	SO2	Fugitive PM10	Exhaust PM10	PM10 Total	Fugitive PM2.5	Exhaust PM2.5	PM2.5 Total	Bio- CO2	NBio- CO2	Total CO2	CH4	N2O	CO2e
Category	tons/yr										MT/yr					
Off-Road	0.1342	1.6893	0.6757	1.6800e-003		0.0678	0.0678		0.0624	0.0624	0.0000	155.1954	155.1954	0.0472	0.0000	156.1863
Total	**0.1342**	**1.6893**	**0.6757**	**1.6800e-003**		**0.0678**	**0.0678**		**0.0624**	**0.0624**	**0.0000**	**155.1954**	**155.1954**	**0.0472**	**0.0000**	**156.1863**

3.10 Year -3 Month 9 - 2017

Unmitigated Construction Off-Site

	ROG	NOx	CO	SO2	Fugitive PM10	Exhaust PM10	PM10 Total	Fugitive PM2.5	Exhaust PM2.5	PM2.5 Total	Bio- CO2	NBio- CO2	Total CO2	CH4	N2O	CO2e
Category	tons/yr										MT/yr					
Hauling	0.0000	0.0000	0.0000	0.0000	0.0000	0.0000	0.0000	0.0000	0.0000	0.0000	0.0000	0.0000	0.0000	0.0000	0.0000	0.0000
Vendor	0.0000	0.0000	0.0000	0.0000	0.0000	0.0000	0.0000	0.0000	0.0000	0.0000	0.0000	0.0000	0.0000	0.0000	0.0000	0.0000
Worker	0.0000	0.0000	0.0000	0.0000	0.0000	0.0000	0.0000	0.0000	0.0000	0.0000	0.0000	0.0000	0.0000	0.0000	0.0000	0.0000
Total	**0.0000**	**0.0000**	**0.0000**	**0.0000**	**0.0000**	**0.0000**	**0.0000**	**0.0000**	**0.0000**	**0.0000**	**0.0000**	**0.0000**	**0.0000**	**0.0000**	**0.0000**	**0.0000**

Mitigated Construction On-Site

	ROG	NOx	CO	SO2	Fugitive PM10	Exhaust PM10	PM10 Total	Fugitive PM2.5	Exhaust PM2.5	PM2.5 Total	Bio- CO2	NBio- CO2	Total CO2	CH4	N2O	CO2e
Category	tons/yr										MT/yr					
Off-Road	0.0203	0.0880	0.8148	1.6800e-003		2.7100e-003	2.7100e-003		2.7100e-003	2.7100e-003	0.0000	155.1952	155.1952	0.0472	0.0000	156.1861
Total	**0.0203**	**0.0880**	**0.8148**	**1.6800e-003**		**2.7100e-003**	**2.7100e-003**		**2.7100e-003**	**2.7100e-003**	**0.0000**	**155.1952**	**155.1952**	**0.0472**	**0.0000**	**156.1861**

3.10 Year -3 Month 9 - 2017

Mitigated Construction Off-Site

	ROG	NOx	CO	SO2	Fugitive PM10	Exhaust PM10	PM10 Total	Fugitive PM2.5	Exhaust PM2.5	PM2.5 Total	Bio- CO2	NBio- CO2	Total CO2	CH4	N2O	CO2e
Category	tons/yr										MT/yr					
Hauling	0.0000	0.0000	0.0000	0.0000	0.0000	0.0000	0.0000	0.0000	0.0000	0.0000	0.0000	0.0000	0.0000	0.0000	0.0000	0.0000
Vendor	0.0000	0.0000	0.0000	0.0000	0.0000	0.0000	0.0000	0.0000	0.0000	0.0000	0.0000	0.0000	0.0000	0.0000	0.0000	0.0000
Worker	0.0000	0.0000	0.0000	0.0000	0.0000	0.0000	0.0000	0.0000	0.0000	0.0000	0.0000	0.0000	0.0000	0.0000	0.0000	0.0000
Total	**0.0000**	**0.0000**	**0.0000**	**0.0000**	**0.0000**	**0.0000**	**0.0000**	**0.0000**	**0.0000**	**0.0000**	**0.0000**	**0.0000**	**0.0000**	**0.0000**	**0.0000**	**0.0000**

3.11 Year -3 Month 10 - 2017

Unmitigated Construction On-Site

	ROG	NOx	CO	SO2	Fugitive PM10	Exhaust PM10	PM10 Total	Fugitive PM2.5	Exhaust PM2.5	PM2.5 Total	Bio- CO2	NBio- CO2	Total CO2	CH4	N2O	CO2e
Category	tons/yr										MT/yr					
Off-Road	0.1342	1.6893	0.6757	1.6800e-003		0.0678	0.0678		0.0624	0.0624	0.0000	155.1954	155.1954	0.0472	0.0000	156.1863
Total	**0.1342**	**1.6893**	**0.6757**	**1.6800e-003**		**0.0678**	**0.0678**		**0.0624**	**0.0624**	**0.0000**	**155.1954**	**155.1954**	**0.0472**	**0.0000**	**156.1863**

3.11 Year -3 Month 10 - 2017

Unmitigated Construction Off-Site

	ROG	NOx	CO	SO2	Fugitive PM10	Exhaust PM10	PM10 Total	Fugitive PM2.5	Exhaust PM2.5	PM2.5 Total	Bio- CO2	NBio- CO2	Total CO2	CH4	N2O	CO2e
Category	tons/yr										MT/yr					
Hauling	0.0000	0.0000	0.0000	0.0000	0.0000	0.0000	0.0000	0.0000	0.0000	0.0000	0.0000	0.0000	0.0000	0.0000	0.0000	0.0000
Vendor	0.0000	0.0000	0.0000	0.0000	0.0000	0.0000	0.0000	0.0000	0.0000	0.0000	0.0000	0.0000	0.0000	0.0000	0.0000	0.0000
Worker	0.0000	0.0000	0.0000	0.0000	0.0000	0.0000	0.0000	0.0000	0.0000	0.0000	0.0000	0.0000	0.0000	0.0000	0.0000	0.0000
Total	**0.0000**	**0.0000**	**0.0000**	**0.0000**	**0.0000**	**0.0000**	**0.0000**	**0.0000**	**0.0000**	**0.0000**	**0.0000**	**0.0000**	**0.0000**	**0.0000**	**0.0000**	**0.0000**

Mitigated Construction On-Site

	ROG	NOx	CO	SO2	Fugitive PM10	Exhaust PM10	PM10 Total	Fugitive PM2.5	Exhaust PM2.5	PM2.5 Total	Bio- CO2	NBio- CO2	Total CO2	CH4	N2O	CO2e
Category	tons/yr										MT/yr					
Off-Road	0.0203	0.0880	0.8148	1.6800e-003		2.7100e-003	2.7100e-003		2.7100e-003	2.7100e-003	0.0000	155.1952	155.1952	0.0472	0.0000	156.1861
Total	**0.0203**	**0.0880**	**0.8148**	**1.6800e-003**		**2.7100e-003**	**2.7100e-003**		**2.7100e-003**	**2.7100e-003**	**0.0000**	**155.1952**	**155.1952**	**0.0472**	**0.0000**	**156.1861**

3.11 Year -3 Month 10 - 2017

Mitigated Construction Off-Site

	ROG	NOx	CO	SO2	Fugitive PM10	Exhaust PM10	PM10 Total	Fugitive PM2.5	Exhaust PM2.5	PM2.5 Total	Bio- CO2	NBio- CO2	Total CO2	CH4	N2O	CO2e
Category	tons/yr										MT/yr					
Hauling	0.0000	0.0000	0.0000	0.0000	0.0000	0.0000	0.0000	0.0000	0.0000	0.0000	0.0000	0.0000	0.0000	0.0000	0.0000	0.0000
Vendor	0.0000	0.0000	0.0000	0.0000	0.0000	0.0000	0.0000	0.0000	0.0000	0.0000	0.0000	0.0000	0.0000	0.0000	0.0000	0.0000
Worker	0.0000	0.0000	0.0000	0.0000	0.0000	0.0000	0.0000	0.0000	0.0000	0.0000	0.0000	0.0000	0.0000	0.0000	0.0000	0.0000
Total	**0.0000**	**0.0000**	**0.0000**	**0.0000**	**0.0000**	**0.0000**	**0.0000**	**0.0000**	**0.0000**	**0.0000**	**0.0000**	**0.0000**	**0.0000**	**0.0000**	**0.0000**	**0.0000**

3.12 Year -3 Month 11 - 2017

Unmitigated Construction On-Site

	ROG	NOx	CO	SO2	Fugitive PM10	Exhaust PM10	PM10 Total	Fugitive PM2.5	Exhaust PM2.5	PM2.5 Total	Bio- CO2	NBio- CO2	Total CO2	CH4	N2O	CO2e
Category	tons/yr										MT/yr					
Off-Road	0.1342	1.6893	0.6757	1.6800e-003		0.0678	0.0678		0.0624	0.0624	0.0000	155.1954	155.1954	0.0472	0.0000	156.1863
Total	**0.1342**	**1.6893**	**0.6757**	**1.6800e-003**		**0.0678**	**0.0678**		**0.0624**	**0.0624**	**0.0000**	**155.1954**	**155.1954**	**0.0472**	**0.0000**	**156.1863**

3.12 Year -3 Month 11 - 2017

Unmitigated Construction Off-Site

	ROG	NOx	CO	SO2	Fugitive PM10	Exhaust PM10	PM10 Total	Fugitive PM2.5	Exhaust PM2.5	PM2.5 Total	Bio- CO2	NBio- CO2	Total CO2	CH4	N2O	CO2e
Category	tons/yr										MT/yr					
Hauling	0.0000	0.0000	0.0000	0.0000	0.0000	0.0000	0.0000	0.0000	0.0000	0.0000	0.0000	0.0000	0.0000	0.0000	0.0000	0.0000
Vendor	0.0000	0.0000	0.0000	0.0000	0.0000	0.0000	0.0000	0.0000	0.0000	0.0000	0.0000	0.0000	0.0000	0.0000	0.0000	0.0000
Worker	0.0000	0.0000	0.0000	0.0000	0.0000	0.0000	0.0000	0.0000	0.0000	0.0000	0.0000	0.0000	0.0000	0.0000	0.0000	0.0000
Total	**0.0000**	**0.0000**	**0.0000**	**0.0000**	**0.0000**	**0.0000**	**0.0000**	**0.0000**	**0.0000**	**0.0000**	**0.0000**	**0.0000**	**0.0000**	**0.0000**	**0.0000**	**0.0000**

Mitigated Construction On-Site

	ROG	NOx	CO	SO2	Fugitive PM10	Exhaust PM10	PM10 Total	Fugitive PM2.5	Exhaust PM2.5	PM2.5 Total	Bio- CO2	NBio- CO2	Total CO2	CH4	N2O	CO2e
Category	tons/yr										MT/yr					
Off-Road	0.0203	0.0880	0.8148	1.6800e-003		2.7100e-003	2.7100e-003		2.7100e-003	2.7100e-003	0.0000	155.1952	155.1952	0.0472	0.0000	156.1861
Total	**0.0203**	**0.0880**	**0.8148**	**1.6800e-003**		**2.7100e-003**	**2.7100e-003**		**2.7100e-003**	**2.7100e-003**	**0.0000**	**155.1952**	**155.1952**	**0.0472**	**0.0000**	**156.1861**

3.12 Year -3 Month 11 - 2017

Mitigated Construction Off-Site

	ROG	NOx	CO	SO2	Fugitive PM10	Exhaust PM10	PM10 Total	Fugitive PM2.5	Exhaust PM2.5	PM2.5 Total	Bio- CO2	NBio- CO2	Total CO2	CH4	N2O	CO2e
Category	tons/yr										MT/yr					
Hauling	0.0000	0.0000	0.0000	0.0000	0.0000	0.0000	0.0000	0.0000	0.0000	0.0000	0.0000	0.0000	0.0000	0.0000	0.0000	0.0000
Vendor	0.0000	0.0000	0.0000	0.0000	0.0000	0.0000	0.0000	0.0000	0.0000	0.0000	0.0000	0.0000	0.0000	0.0000	0.0000	0.0000
Worker	0.0000	0.0000	0.0000	0.0000	0.0000	0.0000	0.0000	0.0000	0.0000	0.0000	0.0000	0.0000	0.0000	0.0000	0.0000	0.0000
Total	**0.0000**	**0.0000**	**0.0000**	**0.0000**	**0.0000**	**0.0000**	**0.0000**	**0.0000**	**0.0000**	**0.0000**	**0.0000**	**0.0000**	**0.0000**	**0.0000**	**0.0000**	**0.0000**

3.13 Year -3 Month 12 - 2017

Unmitigated Construction On-Site

	ROG	NOx	CO	SO2	Fugitive PM10	Exhaust PM10	PM10 Total	Fugitive PM2.5	Exhaust PM2.5	PM2.5 Total	Bio- CO2	NBio- CO2	Total CO2	CH4	N2O	CO2e
Category	tons/yr										MT/yr					
Off-Road	0.1342	1.6893	0.6757	1.6800e-003		0.0678	0.0678		0.0624	0.0624	0.0000	155.1954	155.1954	0.0472	0.0000	156.1863
Total	**0.1342**	**1.6893**	**0.6757**	**1.6800e-003**		**0.0678**	**0.0678**		**0.0624**	**0.0624**	**0.0000**	**155.1954**	**155.1954**	**0.0472**	**0.0000**	**156.1863**

3.13 Year -3 Month 12 - 2017

Unmitigated Construction Off-Site

	ROG	NOx	CO	SO2	Fugitive PM10	Exhaust PM10	PM10 Total	Fugitive PM2.5	Exhaust PM2.5	PM2.5 Total	Bio- CO2	NBio- CO2	Total CO2	CH4	N2O	CO2e
Category	tons/yr										MT/yr					
Hauling	0.0000	0.0000	0.0000	0.0000	0.0000	0.0000	0.0000	0.0000	0.0000	0.0000	0.0000	0.0000	0.0000	0.0000	0.0000	0.0000
Vendor	0.0000	0.0000	0.0000	0.0000	0.0000	0.0000	0.0000	0.0000	0.0000	0.0000	0.0000	0.0000	0.0000	0.0000	0.0000	0.0000
Worker	0.0000	0.0000	0.0000	0.0000	0.0000	0.0000	0.0000	0.0000	0.0000	0.0000	0.0000	0.0000	0.0000	0.0000	0.0000	0.0000
Total	**0.0000**	**0.0000**	**0.0000**	**0.0000**	**0.0000**	**0.0000**	**0.0000**	**0.0000**	**0.0000**	**0.0000**	**0.0000**	**0.0000**	**0.0000**	**0.0000**	**0.0000**	**0.0000**

Mitigated Construction On-Site

	ROG	NOx	CO	SO2	Fugitive PM10	Exhaust PM10	PM10 Total	Fugitive PM2.5	Exhaust PM2.5	PM2.5 Total	Bio- CO2	NBio- CO2	Total CO2	CH4	N2O	CO2e
Category	tons/yr										MT/yr					
Off-Road	0.0203	0.0880	0.8148	1.6800e-003		2.7100e-003	2.7100e-003		2.7100e-003	2.7100e-003	0.0000	155.1952	155.1952	0.0472	0.0000	156.1861
Total	**0.0203**	**0.0880**	**0.8148**	**1.6800e-003**		**2.7100e-003**	**2.7100e-003**		**2.7100e-003**	**2.7100e-003**	**0.0000**	**155.1952**	**155.1952**	**0.0472**	**0.0000**	**156.1861**

3.13 Year -3 Month 12 - 2017

Mitigated Construction Off-Site

	ROG	NOx	CO	SO2	Fugitive PM10	Exhaust PM10	PM10 Total	Fugitive PM2.5	Exhaust PM2.5	PM2.5 Total	Bio- CO2	NBio- CO2	Total CO2	CH4	N2O	CO2e
Category	tons/yr										MT/yr					
Hauling	0.0000	0.0000	0.0000	0.0000	0.0000	0.0000	0.0000	0.0000	0.0000	0.0000	0.0000	0.0000	0.0000	0.0000	0.0000	0.0000
Vendor	0.0000	0.0000	0.0000	0.0000	0.0000	0.0000	0.0000	0.0000	0.0000	0.0000	0.0000	0.0000	0.0000	0.0000	0.0000	0.0000
Worker	0.0000	0.0000	0.0000	0.0000	0.0000	0.0000	0.0000	0.0000	0.0000	0.0000	0.0000	0.0000	0.0000	0.0000	0.0000	0.0000
Total	**0.0000**	**0.0000**	**0.0000**	**0.0000**	**0.0000**	**0.0000**	**0.0000**	**0.0000**	**0.0000**	**0.0000**	**0.0000**	**0.0000**	**0.0000**	**0.0000**	**0.0000**	**0.0000**

3.14 Year -2 Month 1 - 2018

Unmitigated Construction On-Site

	ROG	NOx	CO	SO2	Fugitive PM10	Exhaust PM10	PM10 Total	Fugitive PM2.5	Exhaust PM2.5	PM2.5 Total	Bio- CO2	NBio- CO2	Total CO2	CH4	N2O	CO2e
Category	tons/yr										MT/yr					
Off-Road	0.2030	2.1372	1.1172	2.4200e-003		0.0972	0.0972		0.0899	0.0899	0.0000	218.4307	218.4307	0.0667	0.0000	219.8316
Total	**0.2030**	**2.1372**	**1.1172**	**2.4200e-003**		**0.0972**	**0.0972**		**0.0899**	**0.0899**	**0.0000**	**218.4307**	**218.4307**	**0.0667**	**0.0000**	**219.8316**

3.14 Year -2 Month 1 - 2018

Unmitigated Construction Off-Site

	ROG	NOx	CO	SO2	Fugitive PM10	Exhaust PM10	PM10 Total	Fugitive PM2.5	Exhaust PM2.5	PM2.5 Total	Bio- CO2	NBio- CO2	Total CO2	CH4	N2O	CO2e
Category	tons/yr										MT/yr					
Hauling	0.0000	0.0000	0.0000	0.0000	0.0000	0.0000	0.0000	0.0000	0.0000	0.0000	0.0000	0.0000	0.0000	0.0000	0.0000	0.0000
Vendor	0.0000	0.0000	0.0000	0.0000	0.0000	0.0000	0.0000	0.0000	0.0000	0.0000	0.0000	0.0000	0.0000	0.0000	0.0000	0.0000
Worker	0.0000	0.0000	0.0000	0.0000	0.0000	0.0000	0.0000	0.0000	0.0000	0.0000	0.0000	0.0000	0.0000	0.0000	0.0000	0.0000
Total	**0.0000**	**0.0000**	**0.0000**	**0.0000**	**0.0000**	**0.0000**	**0.0000**	**0.0000**	**0.0000**	**0.0000**	**0.0000**	**0.0000**	**0.0000**	**0.0000**	**0.0000**	**0.0000**

Mitigated Construction On-Site

	ROG	NOx	CO	SO2	Fugitive PM10	Exhaust PM10	PM10 Total	Fugitive PM2.5	Exhaust PM2.5	PM2.5 Total	Bio- CO2	NBio- CO2	Total CO2	CH4	N2O	CO2e
Category	tons/yr										MT/yr					
Off-Road	0.0327	0.2850	1.2762	2.4200e-003		3.8400e-003	3.8400e-003		3.8400e-003	3.8400e-003	0.0000	218.4304	218.4304	0.0667	0.0000	219.8313
Total	**0.0327**	**0.2850**	**1.2762**	**2.4200e-003**		**3.8400e-003**	**3.8400e-003**		**3.8400e-003**	**3.8400e-003**	**0.0000**	**218.4304**	**218.4304**	**0.0667**	**0.0000**	**219.8313**

3.14 Year -2 Month 1 - 2018

Mitigated Construction Off-Site

	ROG	NOx	CO	SO2	Fugitive PM10	Exhaust PM10	PM10 Total	Fugitive PM2.5	Exhaust PM2.5	PM2.5 Total	Bio- CO2	NBio- CO2	Total CO2	CH4	N2O	CO2e
Category	tons/yr										MT/yr					
Hauling	0.0000	0.0000	0.0000	0.0000	0.0000	0.0000	0.0000	0.0000	0.0000	0.0000	0.0000	0.0000	0.0000	0.0000	0.0000	0.0000
Vendor	0.0000	0.0000	0.0000	0.0000	0.0000	0.0000	0.0000	0.0000	0.0000	0.0000	0.0000	0.0000	0.0000	0.0000	0.0000	0.0000
Worker	0.0000	0.0000	0.0000	0.0000	0.0000	0.0000	0.0000	0.0000	0.0000	0.0000	0.0000	0.0000	0.0000	0.0000	0.0000	0.0000
Total	**0.0000**	**0.0000**	**0.0000**	**0.0000**	**0.0000**	**0.0000**	**0.0000**	**0.0000**	**0.0000**	**0.0000**	**0.0000**	**0.0000**	**0.0000**	**0.0000**	**0.0000**	**0.0000**

3.15 Year -2 Month 2 - 2018

Unmitigated Construction On-Site

	ROG	NOx	CO	SO2	Fugitive PM10	Exhaust PM10	PM10 Total	Fugitive PM2.5	Exhaust PM2.5	PM2.5 Total	Bio- CO2	NBio- CO2	Total CO2	CH4	N2O	CO2e
Category	tons/yr										MT/yr					
Off-Road	0.2220	2.1930	1.2073	2.4400e-003		0.1058	0.1058		0.0981	0.0981	0.0000	218.3988	218.3988	0.0657	0.0000	219.7785
Total	**0.2220**	**2.1930**	**1.2073**	**2.4400e-003**		**0.1058**	**0.1058**		**0.0981**	**0.0981**	**0.0000**	**218.3988**	**218.3988**	**0.0657**	**0.0000**	**219.7785**

3.15 Year -2 Month 2 - 2018

Unmitigated Construction Off-Site

	ROG	NOx	CO	SO2	Fugitive PM10	Exhaust PM10	PM10 Total	Fugitive PM2.5	Exhaust PM2.5	PM2.5 Total	Bio- CO2	NBio- CO2	Total CO2	CH4	N2O	CO2e
Category	tons/yr										MT/yr					
Hauling	0.0000	0.0000	0.0000	0.0000	0.0000	0.0000	0.0000	0.0000	0.0000	0.0000	0.0000	0.0000	0.0000	0.0000	0.0000	0.0000
Vendor	0.0000	0.0000	0.0000	0.0000	0.0000	0.0000	0.0000	0.0000	0.0000	0.0000	0.0000	0.0000	0.0000	0.0000	0.0000	0.0000
Worker	0.0000	0.0000	0.0000	0.0000	0.0000	0.0000	0.0000	0.0000	0.0000	0.0000	0.0000	0.0000	0.0000	0.0000	0.0000	0.0000
Total	**0.0000**	**0.0000**	**0.0000**	**0.0000**	**0.0000**	**0.0000**	**0.0000**	**0.0000**	**0.0000**	**0.0000**	**0.0000**	**0.0000**	**0.0000**	**0.0000**	**0.0000**	**0.0000**

Mitigated Construction On-Site

	ROG	NOx	CO	SO2	Fugitive PM10	Exhaust PM10	PM10 Total	Fugitive PM2.5	Exhaust PM2.5	PM2.5 Total	Bio- CO2	NBio- CO2	Total CO2	CH4	N2O	CO2e
Category	tons/yr										MT/yr					
Off-Road	0.0340	0.3547	1.3120	2.4400e-003		3.7900e-003	3.7900e-003		3.7900e-003	3.7900e-003	0.0000	218.3986	218.3986	0.0657	0.0000	219.7782
Total	**0.0340**	**0.3547**	**1.3120**	**2.4400e-003**		**3.7900e-003**	**3.7900e-003**		**3.7900e-003**	**3.7900e-003**	**0.0000**	**218.3986**	**218.3986**	**0.0657**	**0.0000**	**219.7782**

3.15 Year -2 Month 2 - 2018

Mitigated Construction Off-Site

	ROG	NOx	CO	SO2	Fugitive PM10	Exhaust PM10	PM10 Total	Fugitive PM2.5	Exhaust PM2.5	PM2.5 Total	Bio- CO2	NBio- CO2	Total CO2	CH4	N2O	CO2e
Category	tons/yr										MT/yr					
Hauling	0.0000	0.0000	0.0000	0.0000	0.0000	0.0000	0.0000	0.0000	0.0000	0.0000	0.0000	0.0000	0.0000	0.0000	0.0000	0.0000
Vendor	0.0000	0.0000	0.0000	0.0000	0.0000	0.0000	0.0000	0.0000	0.0000	0.0000	0.0000	0.0000	0.0000	0.0000	0.0000	0.0000
Worker	0.0000	0.0000	0.0000	0.0000	0.0000	0.0000	0.0000	0.0000	0.0000	0.0000	0.0000	0.0000	0.0000	0.0000	0.0000	0.0000
Total	**0.0000**	**0.0000**	**0.0000**	**0.0000**	**0.0000**	**0.0000**	**0.0000**	**0.0000**	**0.0000**	**0.0000**	**0.0000**	**0.0000**	**0.0000**	**0.0000**	**0.0000**	**0.0000**

3.16 Year -2 Month 3 - 2018

Unmitigated Construction On-Site

	ROG	NOx	CO	SO2	Fugitive PM10	Exhaust PM10	PM10 Total	Fugitive PM2.5	Exhaust PM2.5	PM2.5 Total	Bio- CO2	NBio- CO2	Total CO2	CH4	N2O	CO2e
Category	tons/yr										MT/yr					
Off-Road	0.4529	4.5376	2.4769	5.4500e-003		0.2064	0.2064		0.1916	0.1916	0.0000	488.3157	488.3157	0.1471	0.0000	491.4044
Total	**0.4529**	**4.5376**	**2.4769**	**5.4500e-003**		**0.2064**	**0.2064**		**0.1916**	**0.1916**	**0.0000**	**488.3157**	**488.3157**	**0.1471**	**0.0000**	**491.4044**

3.16 Year -2 Month 3 - 2018

Unmitigated Construction Off-Site

	ROG	NOx	CO	SO2	Fugitive PM10	Exhaust PM10	PM10 Total	Fugitive PM2.5	Exhaust PM2.5	PM2.5 Total	Bio- CO2	NBio- CO2	Total CO2	CH4	N2O	CO2e
Category	tons/yr										MT/yr					
Hauling	0.0000	0.0000	0.0000	0.0000	0.0000	0.0000	0.0000	0.0000	0.0000	0.0000	0.0000	0.0000	0.0000	0.0000	0.0000	0.0000
Vendor	0.0000	0.0000	0.0000	0.0000	0.0000	0.0000	0.0000	0.0000	0.0000	0.0000	0.0000	0.0000	0.0000	0.0000	0.0000	0.0000
Worker	0.0000	0.0000	0.0000	0.0000	0.0000	0.0000	0.0000	0.0000	0.0000	0.0000	0.0000	0.0000	0.0000	0.0000	0.0000	0.0000
Total	**0.0000**	**0.0000**	**0.0000**	**0.0000**	**0.0000**	**0.0000**	**0.0000**	**0.0000**	**0.0000**	**0.0000**	**0.0000**	**0.0000**	**0.0000**	**0.0000**	**0.0000**	**0.0000**

Mitigated Construction On-Site

	ROG	NOx	CO	SO2	Fugitive PM10	Exhaust PM10	PM10 Total	Fugitive PM2.5	Exhaust PM2.5	PM2.5 Total	Bio- CO2	NBio- CO2	Total CO2	CH4	N2O	CO2e
Category	tons/yr										MT/yr					
Off-Road	0.0722	0.6343	2.7676	5.4500e-003		8.4800e-003	8.4800e-003		8.4800e-003	8.4800e-003	0.0000	488.3151	488.3151	0.1471	0.0000	491.4038
Total	**0.0722**	**0.6343**	**2.7676**	**5.4500e-003**		**8.4800e-003**	**8.4800e-003**		**8.4800e-003**	**8.4800e-003**	**0.0000**	**488.3151**	**488.3151**	**0.1471**	**0.0000**	**491.4038**

3.16 Year -2 Month 3 - 2018

Mitigated Construction Off-Site

	ROG	NOx	CO	SO2	Fugitive PM10	Exhaust PM10	PM10 Total	Fugitive PM2.5	Exhaust PM2.5	PM2.5 Total	Bio- CO2	NBio- CO2	Total CO2	CH4	N2O	CO2e
Category	tons/yr										MT/yr					
Hauling	0.0000	0.0000	0.0000	0.0000	0.0000	0.0000	0.0000	0.0000	0.0000	0.0000	0.0000	0.0000	0.0000	0.0000	0.0000	0.0000
Vendor	0.0000	0.0000	0.0000	0.0000	0.0000	0.0000	0.0000	0.0000	0.0000	0.0000	0.0000	0.0000	0.0000	0.0000	0.0000	0.0000
Worker	0.0000	0.0000	0.0000	0.0000	0.0000	0.0000	0.0000	0.0000	0.0000	0.0000	0.0000	0.0000	0.0000	0.0000	0.0000	0.0000
Total	**0.0000**	**0.0000**	**0.0000**	**0.0000**	**0.0000**	**0.0000**	**0.0000**	**0.0000**	**0.0000**	**0.0000**	**0.0000**	**0.0000**	**0.0000**	**0.0000**	**0.0000**	**0.0000**

3.17 Year -2 Month 4 - 2018

Unmitigated Construction On-Site

	ROG	NOx	CO	SO2	Fugitive PM10	Exhaust PM10	PM10 Total	Fugitive PM2.5	Exhaust PM2.5	PM2.5 Total	Bio- CO2	NBio- CO2	Total CO2	CH4	N2O	CO2e
Category	tons/yr										MT/yr					
Off-Road	0.4197	4.2081	2.2998	5.0600e-003		0.1913	0.1913		0.1775	0.1775	0.0000	453.1588	453.1588	0.1365	0.0000	456.0253
Total	**0.4197**	**4.2081**	**2.2998**	**5.0600e-003**		**0.1913**	**0.1913**		**0.1775**	**0.1775**	**0.0000**	**453.1588**	**453.1588**	**0.1365**	**0.0000**	**456.0253**

3.17 Year -2 Month 4 - 2018

Unmitigated Construction Off-Site

	ROG	NOx	CO	SO2	Fugitive PM10	Exhaust PM10	PM10 Total	Fugitive PM2.5	Exhaust PM2.5	PM2.5 Total	Bio- CO2	NBio- CO2	Total CO2	CH4	N2O	CO2e
Category	tons/yr										MT/yr					
Hauling	0.0000	0.0000	0.0000	0.0000	0.0000	0.0000	0.0000	0.0000	0.0000	0.0000	0.0000	0.0000	0.0000	0.0000	0.0000	0.0000
Vendor	0.0000	0.0000	0.0000	0.0000	0.0000	0.0000	0.0000	0.0000	0.0000	0.0000	0.0000	0.0000	0.0000	0.0000	0.0000	0.0000
Worker	0.0000	0.0000	0.0000	0.0000	0.0000	0.0000	0.0000	0.0000	0.0000	0.0000	0.0000	0.0000	0.0000	0.0000	0.0000	0.0000
Total	**0.0000**	**0.0000**	**0.0000**	**0.0000**	**0.0000**	**0.0000**	**0.0000**	**0.0000**	**0.0000**	**0.0000**	**0.0000**	**0.0000**	**0.0000**	**0.0000**	**0.0000**	**0.0000**

Mitigated Construction On-Site

	ROG	NOx	CO	SO2	Fugitive PM10	Exhaust PM10	PM10 Total	Fugitive PM2.5	Exhaust PM2.5	PM2.5 Total	Bio- CO2	NBio- CO2	Total CO2	CH4	N2O	CO2e
Category	tons/yr										MT/yr					
Off-Road	0.0669	0.5873	2.5626	5.0600e-003		7.8500e-003	7.8500e-003		7.8500e-003	7.8500e-003	0.0000	453.1583	453.1583	0.1365	0.0000	456.0248
Total	**0.0669**	**0.5873**	**2.5626**	**5.0600e-003**		**7.8500e-003**	**7.8500e-003**		**7.8500e-003**	**7.8500e-003**	**0.0000**	**453.1583**	**453.1583**	**0.1365**	**0.0000**	**456.0248**

3.17 Year -2 Month 4 - 2018

Mitigated Construction Off-Site

	ROG	NOx	CO	SO2	Fugitive PM10	Exhaust PM10	PM10 Total	Fugitive PM2.5	Exhaust PM2.5	PM2.5 Total	Bio- CO2	NBio- CO2	Total CO2	CH4	N2O	CO2e
Category	tons/yr										MT/yr					
Hauling	0.0000	0.0000	0.0000	0.0000	0.0000	0.0000	0.0000	0.0000	0.0000	0.0000	0.0000	0.0000	0.0000	0.0000	0.0000	0.0000
Vendor	0.0000	0.0000	0.0000	0.0000	0.0000	0.0000	0.0000	0.0000	0.0000	0.0000	0.0000	0.0000	0.0000	0.0000	0.0000	0.0000
Worker	0.0000	0.0000	0.0000	0.0000	0.0000	0.0000	0.0000	0.0000	0.0000	0.0000	0.0000	0.0000	0.0000	0.0000	0.0000	0.0000
Total	**0.0000**	**0.0000**	**0.0000**	**0.0000**	**0.0000**	**0.0000**	**0.0000**	**0.0000**	**0.0000**	**0.0000**	**0.0000**	**0.0000**	**0.0000**	**0.0000**	**0.0000**	**0.0000**

3.18 Year -2 Month 5 - 2018

Unmitigated Construction On-Site

	ROG	NOx	CO	SO2	Fugitive PM10	Exhaust PM10	PM10 Total	Fugitive PM2.5	Exhaust PM2.5	PM2.5 Total	Bio- CO2	NBio- CO2	Total CO2	CH4	N2O	CO2e
Category	tons/yr										MT/yr					
Off-Road	0.4831	4.7237	2.6239	5.7500e-003		0.2148	0.2148		0.1998	0.1998	0.0000	513.1110	513.1110	0.1536	0.0000	516.3368
Total	**0.4831**	**4.7237**	**2.6239**	**5.7500e-003**		**0.2148**	**0.2148**		**0.1998**	**0.1998**	**0.0000**	**513.1110**	**513.1110**	**0.1536**	**0.0000**	**516.3368**

3.18 Year -2 Month 5 - 2018

Unmitigated Construction Off-Site

	ROG	NOx	CO	SO2	Fugitive PM10	Exhaust PM10	PM10 Total	Fugitive PM2.5	Exhaust PM2.5	PM2.5 Total	Bio- CO2	NBio- CO2	Total CO2	CH4	N2O	CO2e
Category	tons/yr										MT/yr					
Hauling	0.0000	0.0000	0.0000	0.0000	0.0000	0.0000	0.0000	0.0000	0.0000	0.0000	0.0000	0.0000	0.0000	0.0000	0.0000	0.0000
Vendor	0.0000	0.0000	0.0000	0.0000	0.0000	0.0000	0.0000	0.0000	0.0000	0.0000	0.0000	0.0000	0.0000	0.0000	0.0000	0.0000
Worker	0.0000	0.0000	0.0000	0.0000	0.0000	0.0000	0.0000	0.0000	0.0000	0.0000	0.0000	0.0000	0.0000	0.0000	0.0000	0.0000
Total	**0.0000**	**0.0000**	**0.0000**	**0.0000**	**0.0000**	**0.0000**	**0.0000**	**0.0000**	**0.0000**	**0.0000**	**0.0000**	**0.0000**	**0.0000**	**0.0000**	**0.0000**	**0.0000**

Mitigated Construction On-Site

	ROG	NOx	CO	SO2	Fugitive PM10	Exhaust PM10	PM10 Total	Fugitive PM2.5	Exhaust PM2.5	PM2.5 Total	Bio- CO2	NBio- CO2	Total CO2	CH4	N2O	CO2e
Category	tons/yr										MT/yr					
Off-Road	0.0760	0.6771	2.9033	5.7500e-003		8.8800e-003	8.8800e-003		8.8800e-003	8.8800e-003	0.0000	513.1104	513.1104	0.1536	0.0000	516.3362
Total	**0.0760**	**0.6771**	**2.9033**	**5.7500e-003**		**8.8800e-003**	**8.8800e-003**		**8.8800e-003**	**8.8800e-003**	**0.0000**	**513.1104**	**513.1104**	**0.1536**	**0.0000**	**516.3362**

3.18 Year -2 Month 5 - 2018

Mitigated Construction Off-Site

	ROG	NOx	CO	SO2	Fugitive PM10	Exhaust PM10	PM10 Total	Fugitive PM2.5	Exhaust PM2.5	PM2.5 Total	Bio- CO2	NBio- CO2	Total CO2	CH4	N2O	CO2e
Category	tons/yr										MT/yr					
Hauling	0.0000	0.0000	0.0000	0.0000	0.0000	0.0000	0.0000	0.0000	0.0000	0.0000	0.0000	0.0000	0.0000	0.0000	0.0000	0.0000
Vendor	0.0000	0.0000	0.0000	0.0000	0.0000	0.0000	0.0000	0.0000	0.0000	0.0000	0.0000	0.0000	0.0000	0.0000	0.0000	0.0000
Worker	0.0000	0.0000	0.0000	0.0000	0.0000	0.0000	0.0000	0.0000	0.0000	0.0000	0.0000	0.0000	0.0000	0.0000	0.0000	0.0000
Total	**0.0000**	**0.0000**	**0.0000**	**0.0000**	**0.0000**	**0.0000**	**0.0000**	**0.0000**	**0.0000**	**0.0000**	**0.0000**	**0.0000**	**0.0000**	**0.0000**	**0.0000**	**0.0000**

3.19 Year -2 Month 6 - 2018

Unmitigated Construction On-Site

	ROG	NOx	CO	SO2	Fugitive PM10	Exhaust PM10	PM10 Total	Fugitive PM2.5	Exhaust PM2.5	PM2.5 Total	Bio- CO2	NBio- CO2	Total CO2	CH4	N2O	CO2e
Category	tons/yr										MT/yr					
Off-Road	0.4937	4.8619	2.6817	5.8600e-003		0.2220	0.2220		0.2064	0.2064	0.0000	523.9949	523.9949	0.1572	0.0000	527.2967
Total	**0.4937**	**4.8619**	**2.6817**	**5.8600e-003**		**0.2220**	**0.2220**		**0.2064**	**0.2064**	**0.0000**	**523.9949**	**523.9949**	**0.1572**	**0.0000**	**527.2967**

3.19 Year -2 Month 6 - 2018

Unmitigated Construction Off-Site

	ROG	NOx	CO	SO2	Fugitive PM10	Exhaust PM10	PM10 Total	Fugitive PM2.5	Exhaust PM2.5	PM2.5 Total	Bio- CO2	NBio- CO2	Total CO2	CH4	N2O	CO2e
Category	tons/yr										MT/yr					
Hauling	0.0000	0.0000	0.0000	0.0000	0.0000	0.0000	0.0000	0.0000	0.0000	0.0000	0.0000	0.0000	0.0000	0.0000	0.0000	0.0000
Vendor	0.0000	0.0000	0.0000	0.0000	0.0000	0.0000	0.0000	0.0000	0.0000	0.0000	0.0000	0.0000	0.0000	0.0000	0.0000	0.0000
Worker	0.0000	0.0000	0.0000	0.0000	0.0000	0.0000	0.0000	0.0000	0.0000	0.0000	0.0000	0.0000	0.0000	0.0000	0.0000	0.0000
Total	**0.0000**	**0.0000**	**0.0000**	**0.0000**	**0.0000**	**0.0000**	**0.0000**	**0.0000**	**0.0000**	**0.0000**	**0.0000**	**0.0000**	**0.0000**	**0.0000**	**0.0000**	**0.0000**

Mitigated Construction On-Site

	ROG	NOx	CO	SO2	Fugitive PM10	Exhaust PM10	PM10 Total	Fugitive PM2.5	Exhaust PM2.5	PM2.5 Total	Bio- CO2	NBio- CO2	Total CO2	CH4	N2O	CO2e
Category	tons/yr										MT/yr					
Off-Road	0.0778	0.6950	2.9585	5.8600e-003		9.0800e-003	9.0800e-003		9.0800e-003	9.0800e-003	0.0000	523.9943	523.9943	0.1572	0.0000	527.2961
Total	**0.0778**	**0.6950**	**2.9585**	**5.8600e-003**		**9.0800e-003**	**9.0800e-003**		**9.0800e-003**	**9.0800e-003**	**0.0000**	**523.9943**	**523.9943**	**0.1572**	**0.0000**	**527.2961**

3.19 Year -2 Month 6 - 2018

Mitigated Construction Off-Site

	ROG	NOx	CO	SO2	Fugitive PM10	Exhaust PM10	PM10 Total	Fugitive PM2.5	Exhaust PM2.5	PM2.5 Total	Bio- CO2	NBio- CO2	Total CO2	CH4	N2O	CO2e
Category	tons/yr										MT/yr					
Hauling	0.0000	0.0000	0.0000	0.0000	0.0000	0.0000	0.0000	0.0000	0.0000	0.0000	0.0000	0.0000	0.0000	0.0000	0.0000	0.0000
Vendor	0.0000	0.0000	0.0000	0.0000	0.0000	0.0000	0.0000	0.0000	0.0000	0.0000	0.0000	0.0000	0.0000	0.0000	0.0000	0.0000
Worker	0.0000	0.0000	0.0000	0.0000	0.0000	0.0000	0.0000	0.0000	0.0000	0.0000	0.0000	0.0000	0.0000	0.0000	0.0000	0.0000
Total	**0.0000**	**0.0000**	**0.0000**	**0.0000**	**0.0000**	**0.0000**	**0.0000**	**0.0000**	**0.0000**	**0.0000**	**0.0000**	**0.0000**	**0.0000**	**0.0000**	**0.0000**	**0.0000**

3.20 Year -2 Month 7 - 2018

Unmitigated Construction On-Site

	ROG	NOx	CO	SO2	Fugitive PM10	Exhaust PM10	PM10 Total	Fugitive PM2.5	Exhaust PM2.5	PM2.5 Total	Bio- CO2	NBio- CO2	Total CO2	CH4	N2O	CO2e
Category	tons/yr										MT/yr					
Off-Road	0.4595	4.5074	2.4663	5.5300e-003		0.2028	0.2028		0.1887	0.1887	0.0000	493.5179	493.5179	0.1477	0.0000	496.6204
Total	**0.4595**	**4.5074**	**2.4663**	**5.5300e-003**		**0.2028**	**0.2028**		**0.1887**	**0.1887**	**0.0000**	**493.5179**	**493.5179**	**0.1477**	**0.0000**	**496.6204**

3.20 Year -2 Month 7 - 2018

Unmitigated Construction Off-Site

	ROG	NOx	CO	SO2	Fugitive PM10	Exhaust PM10	PM10 Total	Fugitive PM2.5	Exhaust PM2.5	PM2.5 Total	Bio- CO2	NBio- CO2	Total CO2	CH4	N2O	CO2e
Category	tons/yr										MT/yr					
Hauling	0.0000	0.0000	0.0000	0.0000	0.0000	0.0000	0.0000	0.0000	0.0000	0.0000	0.0000	0.0000	0.0000	0.0000	0.0000	0.0000
Vendor	0.0000	0.0000	0.0000	0.0000	0.0000	0.0000	0.0000	0.0000	0.0000	0.0000	0.0000	0.0000	0.0000	0.0000	0.0000	0.0000
Worker	0.0000	0.0000	0.0000	0.0000	0.0000	0.0000	0.0000	0.0000	0.0000	0.0000	0.0000	0.0000	0.0000	0.0000	0.0000	0.0000
Total	**0.0000**	**0.0000**	**0.0000**	**0.0000**	**0.0000**	**0.0000**	**0.0000**	**0.0000**	**0.0000**	**0.0000**	**0.0000**	**0.0000**	**0.0000**	**0.0000**	**0.0000**	**0.0000**

Mitigated Construction On-Site

	ROG	NOx	CO	SO2	Fugitive PM10	Exhaust PM10	PM10 Total	Fugitive PM2.5	Exhaust PM2.5	PM2.5 Total	Bio- CO2	NBio- CO2	Total CO2	CH4	N2O	CO2e
Category	tons/yr										MT/yr					
Off-Road	0.0727	0.6355	2.7347	5.5300e-003		8.5400e-003	8.5400e-003		8.5400e-003	8.5400e-003	0.0000	493.5173	493.5173	0.1477	0.0000	496.6198
Total	**0.0727**	**0.6355**	**2.7347**	**5.5300e-003**		**8.5400e-003**	**8.5400e-003**		**8.5400e-003**	**8.5400e-003**	**0.0000**	**493.5173**	**493.5173**	**0.1477**	**0.0000**	**496.6198**

3.20 Year -2 Month 7 - 2018

Mitigated Construction Off-Site

	ROG	NOx	CO	SO2	Fugitive PM10	Exhaust PM10	PM10 Total	Fugitive PM2.5	Exhaust PM2.5	PM2.5 Total	Bio- CO2	NBio- CO2	Total CO2	CH4	N2O	CO2e
Category	tons/yr										MT/yr					
Hauling	0.0000	0.0000	0.0000	0.0000	0.0000	0.0000	0.0000	0.0000	0.0000	0.0000	0.0000	0.0000	0.0000	0.0000	0.0000	0.0000
Vendor	0.0000	0.0000	0.0000	0.0000	0.0000	0.0000	0.0000	0.0000	0.0000	0.0000	0.0000	0.0000	0.0000	0.0000	0.0000	0.0000
Worker	0.0000	0.0000	0.0000	0.0000	0.0000	0.0000	0.0000	0.0000	0.0000	0.0000	0.0000	0.0000	0.0000	0.0000	0.0000	0.0000
Total	**0.0000**	**0.0000**	**0.0000**	**0.0000**	**0.0000**	**0.0000**	**0.0000**	**0.0000**	**0.0000**	**0.0000**	**0.0000**	**0.0000**	**0.0000**	**0.0000**	**0.0000**	**0.0000**

3.21 Year -2 Month 8 - 2018

Unmitigated Construction On-Site

	ROG	NOx	CO	SO2	Fugitive PM10	Exhaust PM10	PM10 Total	Fugitive PM2.5	Exhaust PM2.5	PM2.5 Total	Bio- CO2	NBio- CO2	Total CO2	CH4	N2O	CO2e
Category	tons/yr										MT/yr					
Off-Road	0.4271	4.2695	2.2724	5.1300e-003		0.1920	0.1920		0.1783	0.1783	0.0000	459.8755	459.8755	0.1386	0.0000	462.7862
Total	**0.4271**	**4.2695**	**2.2724**	**5.1300e-003**		**0.1920**	**0.1920**		**0.1783**	**0.1783**	**0.0000**	**459.8755**	**459.8755**	**0.1386**	**0.0000**	**462.7862**

3.21 Year -2 Month 8 - 2018

Unmitigated Construction Off-Site

	ROG	NOx	CO	SO2	Fugitive PM10	Exhaust PM10	PM10 Total	Fugitive PM2.5	Exhaust PM2.5	PM2.5 Total	Bio- CO2	NBio- CO2	Total CO2	CH4	N2O	CO2e
Category	tons/yr										MT/yr					
Hauling	0.0000	0.0000	0.0000	0.0000	0.0000	0.0000	0.0000	0.0000	0.0000	0.0000	0.0000	0.0000	0.0000	0.0000	0.0000	0.0000
Vendor	0.0000	0.0000	0.0000	0.0000	0.0000	0.0000	0.0000	0.0000	0.0000	0.0000	0.0000	0.0000	0.0000	0.0000	0.0000	0.0000
Worker	0.0000	0.0000	0.0000	0.0000	0.0000	0.0000	0.0000	0.0000	0.0000	0.0000	0.0000	0.0000	0.0000	0.0000	0.0000	0.0000
Total	**0.0000**	**0.0000**	**0.0000**	**0.0000**	**0.0000**	**0.0000**	**0.0000**	**0.0000**	**0.0000**	**0.0000**	**0.0000**	**0.0000**	**0.0000**	**0.0000**	**0.0000**	**0.0000**

Mitigated Construction On-Site

	ROG	NOx	CO	SO2	Fugitive PM10	Exhaust PM10	PM10 Total	Fugitive PM2.5	Exhaust PM2.5	PM2.5 Total	Bio- CO2	NBio- CO2	Total CO2	CH4	N2O	CO2e
Category	tons/yr										MT/yr					
Off-Road	0.0684	0.5975	2.5697	5.1300e-003		8.0400e-003	8.0400e-003		8.0400e-003	8.0400e-003	0.0000	459.8749	459.8749	0.1386	0.0000	462.7857
Total	**0.0684**	**0.5975**	**2.5697**	**5.1300e-003**		**8.0400e-003**	**8.0400e-003**		**8.0400e-003**	**8.0400e-003**	**0.0000**	**459.8749**	**459.8749**	**0.1386**	**0.0000**	**462.7857**

3.21 Year -2 Month 8 - 2018

Mitigated Construction Off-Site

	ROG	NOx	CO	SO2	Fugitive PM10	Exhaust PM10	PM10 Total	Fugitive PM2.5	Exhaust PM2.5	PM2.5 Total	Bio- CO2	NBio- CO2	Total CO2	CH4	N2O	CO2e
Category	tons/yr										MT/yr					
Hauling	0.0000	0.0000	0.0000	0.0000	0.0000	0.0000	0.0000	0.0000	0.0000	0.0000	0.0000	0.0000	0.0000	0.0000	0.0000	0.0000
Vendor	0.0000	0.0000	0.0000	0.0000	0.0000	0.0000	0.0000	0.0000	0.0000	0.0000	0.0000	0.0000	0.0000	0.0000	0.0000	0.0000
Worker	0.0000	0.0000	0.0000	0.0000	0.0000	0.0000	0.0000	0.0000	0.0000	0.0000	0.0000	0.0000	0.0000	0.0000	0.0000	0.0000
Total	**0.0000**	**0.0000**	**0.0000**	**0.0000**	**0.0000**	**0.0000**	**0.0000**	**0.0000**	**0.0000**	**0.0000**	**0.0000**	**0.0000**	**0.0000**	**0.0000**	**0.0000**	**0.0000**

3.22 Year -2 Month 9 - 2018

Unmitigated Construction On-Site

	ROG	NOx	CO	SO2	Fugitive PM10	Exhaust PM10	PM10 Total	Fugitive PM2.5	Exhaust PM2.5	PM2.5 Total	Bio- CO2	NBio- CO2	Total CO2	CH4	N2O	CO2e
Category	tons/yr										MT/yr					
Off-Road	0.2985	2.7936	1.5884	3.4500e-003		0.1286	0.1286		0.1198	0.1198	0.0000	307.1711	307.1711	0.0914	0.0000	309.0906
Total	**0.2985**	**2.7936**	**1.5884**	**3.4500e-003**		**0.1286**	**0.1286**		**0.1198**	**0.1198**	**0.0000**	**307.1711**	**307.1711**	**0.0914**	**0.0000**	**309.0906**

3.22 Year -2 Month 9 - 2018

Unmitigated Construction Off-Site

	ROG	NOx	CO	SO2	Fugitive PM10	Exhaust PM10	PM10 Total	Fugitive PM2.5	Exhaust PM2.5	PM2.5 Total	Bio- CO2	NBio- CO2	Total CO2	CH4	N2O	CO2e
Category	tons/yr										MT/yr					
Hauling	0.0000	0.0000	0.0000	0.0000	0.0000	0.0000	0.0000	0.0000	0.0000	0.0000	0.0000	0.0000	0.0000	0.0000	0.0000	0.0000
Vendor	0.0000	0.0000	0.0000	0.0000	0.0000	0.0000	0.0000	0.0000	0.0000	0.0000	0.0000	0.0000	0.0000	0.0000	0.0000	0.0000
Worker	0.0000	0.0000	0.0000	0.0000	0.0000	0.0000	0.0000	0.0000	0.0000	0.0000	0.0000	0.0000	0.0000	0.0000	0.0000	0.0000
Total	**0.0000**	**0.0000**	**0.0000**	**0.0000**	**0.0000**	**0.0000**	**0.0000**	**0.0000**	**0.0000**	**0.0000**	**0.0000**	**0.0000**	**0.0000**	**0.0000**	**0.0000**	**0.0000**

Mitigated Construction On-Site

	ROG	NOx	CO	SO2	Fugitive PM10	Exhaust PM10	PM10 Total	Fugitive PM2.5	Exhaust PM2.5	PM2.5 Total	Bio- CO2	NBio- CO2	Total CO2	CH4	N2O	CO2e
Category	tons/yr										MT/yr					
Off-Road	0.0465	0.4494	1.7276	3.4500e-003		5.3100e-003	5.3100e-003		5.3100e-003	5.3100e-003	0.0000	307.1707	307.1707	0.0914	0.0000	309.0902
Total	**0.0465**	**0.4494**	**1.7276**	**3.4500e-003**		**5.3100e-003**	**5.3100e-003**		**5.3100e-003**	**5.3100e-003**	**0.0000**	**307.1707**	**307.1707**	**0.0914**	**0.0000**	**309.0902**

3.22 Year -2 Month 9 - 2018

Mitigated Construction Off-Site

	ROG	NOx	CO	SO2	Fugitive PM10	Exhaust PM10	PM10 Total	Fugitive PM2.5	Exhaust PM2.5	PM2.5 Total	Bio- CO2	NBio- CO2	Total CO2	CH4	N2O	CO2e
Category	tons/yr										MT/yr					
Hauling	0.0000	0.0000	0.0000	0.0000	0.0000	0.0000	0.0000	0.0000	0.0000	0.0000	0.0000	0.0000	0.0000	0.0000	0.0000	0.0000
Vendor	0.0000	0.0000	0.0000	0.0000	0.0000	0.0000	0.0000	0.0000	0.0000	0.0000	0.0000	0.0000	0.0000	0.0000	0.0000	0.0000
Worker	0.0000	0.0000	0.0000	0.0000	0.0000	0.0000	0.0000	0.0000	0.0000	0.0000	0.0000	0.0000	0.0000	0.0000	0.0000	0.0000
Total	**0.0000**	**0.0000**	**0.0000**	**0.0000**	**0.0000**	**0.0000**	**0.0000**	**0.0000**	**0.0000**	**0.0000**	**0.0000**	**0.0000**	**0.0000**	**0.0000**	**0.0000**	**0.0000**

3.23 Year -2 Month 10 - 2018

Unmitigated Construction On-Site

	ROG	NOx	CO	SO2	Fugitive PM10	Exhaust PM10	PM10 Total	Fugitive PM2.5	Exhaust PM2.5	PM2.5 Total	Bio- CO2	NBio- CO2	Total CO2	CH4	N2O	CO2e
Category	tons/yr										MT/yr					
Off-Road	0.2192	2.0807	1.1068	2.4000e-003		0.0964	0.0964		0.0898	0.0898	0.0000	212.9760	212.9760	0.0632	0.0000	214.3022
Total	**0.2192**	**2.0807**	**1.1068**	**2.4000e-003**		**0.0964**	**0.0964**		**0.0898**	**0.0898**	**0.0000**	**212.9760**	**212.9760**	**0.0632**	**0.0000**	**214.3022**

3.23 Year -2 Month 10 - 2018

Unmitigated Construction Off-Site

	ROG	NOx	CO	SO2	Fugitive PM10	Exhaust PM10	PM10 Total	Fugitive PM2.5	Exhaust PM2.5	PM2.5 Total	Bio- CO2	NBio- CO2	Total CO2	CH4	N2O	CO2e
Category	tons/yr										MT/yr					
Hauling	0.0000	0.0000	0.0000	0.0000	0.0000	0.0000	0.0000	0.0000	0.0000	0.0000	0.0000	0.0000	0.0000	0.0000	0.0000	0.0000
Vendor	0.0000	0.0000	0.0000	0.0000	0.0000	0.0000	0.0000	0.0000	0.0000	0.0000	0.0000	0.0000	0.0000	0.0000	0.0000	0.0000
Worker	0.0000	0.0000	0.0000	0.0000	0.0000	0.0000	0.0000	0.0000	0.0000	0.0000	0.0000	0.0000	0.0000	0.0000	0.0000	0.0000
Total	**0.0000**	**0.0000**	**0.0000**	**0.0000**	**0.0000**	**0.0000**	**0.0000**	**0.0000**	**0.0000**	**0.0000**	**0.0000**	**0.0000**	**0.0000**	**0.0000**	**0.0000**	**0.0000**

Mitigated Construction On-Site

	ROG	NOx	CO	SO2	Fugitive PM10	Exhaust PM10	PM10 Total	Fugitive PM2.5	Exhaust PM2.5	PM2.5 Total	Bio- CO2	NBio- CO2	Total CO2	CH4	N2O	CO2e
Category	tons/yr										MT/yr					
Off-Road	0.0328	0.3390	1.2010	2.4000e-003		3.6600e-003	3.6600e-003		3.6600e-003	3.6600e-003	0.0000	212.9757	212.9757	0.0632	0.0000	214.3019
Total	**0.0328**	**0.3390**	**1.2010**	**2.4000e-003**		**3.6600e-003**	**3.6600e-003**		**3.6600e-003**	**3.6600e-003**	**0.0000**	**212.9757**	**212.9757**	**0.0632**	**0.0000**	**214.3019**

3.23 Year -2 Month 10 - 2018

Mitigated Construction Off-Site

	ROG	NOx	CO	SO2	Fugitive PM10	Exhaust PM10	PM10 Total	Fugitive PM2.5	Exhaust PM2.5	PM2.5 Total	Bio- CO2	NBio- CO2	Total CO2	CH4	N2O	CO2e
Category	tons/yr										MT/yr					
Hauling	0.0000	0.0000	0.0000	0.0000	0.0000	0.0000	0.0000	0.0000	0.0000	0.0000	0.0000	0.0000	0.0000	0.0000	0.0000	0.0000
Vendor	0.0000	0.0000	0.0000	0.0000	0.0000	0.0000	0.0000	0.0000	0.0000	0.0000	0.0000	0.0000	0.0000	0.0000	0.0000	0.0000
Worker	0.0000	0.0000	0.0000	0.0000	0.0000	0.0000	0.0000	0.0000	0.0000	0.0000	0.0000	0.0000	0.0000	0.0000	0.0000	0.0000
Total	**0.0000**	**0.0000**	**0.0000**	**0.0000**	**0.0000**	**0.0000**	**0.0000**	**0.0000**	**0.0000**	**0.0000**	**0.0000**	**0.0000**	**0.0000**	**0.0000**	**0.0000**	**0.0000**

3.24 Year -2 Month 11 - 2018

Unmitigated Construction On-Site

	ROG	NOx	CO	SO2	Fugitive PM10	Exhaust PM10	PM10 Total	Fugitive PM2.5	Exhaust PM2.5	PM2.5 Total	Bio- CO2	NBio- CO2	Total CO2	CH4	N2O	CO2e
Category	tons/yr										MT/yr					
Off-Road	0.0809	0.5035	0.4126	6.3000e-004		0.0317	0.0317		0.0300	0.0300	0.0000	53.0072	53.0072	0.0142	0.0000	53.3060
Total	**0.0809**	**0.5035**	**0.4126**	**6.3000e-004**		**0.0317**	**0.0317**		**0.0300**	**0.0300**	**0.0000**	**53.0072**	**53.0072**	**0.0142**	**0.0000**	**53.3060**

3.24 Year -2 Month 11 - 2018

Unmitigated Construction Off-Site

	ROG	NOx	CO	SO2	Fugitive PM10	Exhaust PM10	PM10 Total	Fugitive PM2.5	Exhaust PM2.5	PM2.5 Total	Bio- CO2	NBio- CO2	Total CO2	CH4	N2O	CO2e
Category	tons/yr										MT/yr					
Hauling	0.0000	0.0000	0.0000	0.0000	0.0000	0.0000	0.0000	0.0000	0.0000	0.0000	0.0000	0.0000	0.0000	0.0000	0.0000	0.0000
Vendor	0.0000	0.0000	0.0000	0.0000	0.0000	0.0000	0.0000	0.0000	0.0000	0.0000	0.0000	0.0000	0.0000	0.0000	0.0000	0.0000
Worker	0.0000	0.0000	0.0000	0.0000	0.0000	0.0000	0.0000	0.0000	0.0000	0.0000	0.0000	0.0000	0.0000	0.0000	0.0000	0.0000
Total	**0.0000**	**0.0000**	**0.0000**	**0.0000**	**0.0000**	**0.0000**	**0.0000**	**0.0000**	**0.0000**	**0.0000**	**0.0000**	**0.0000**	**0.0000**	**0.0000**	**0.0000**	**0.0000**

Mitigated Construction On-Site

	ROG	NOx	CO	SO2	Fugitive PM10	Exhaust PM10	PM10 Total	Fugitive PM2.5	Exhaust PM2.5	PM2.5 Total	Bio- CO2	NBio- CO2	Total CO2	CH4	N2O	CO2e
Category	tons/yr										MT/yr					
Off-Road	0.0102	0.1970	0.3335	6.3000e-004		8.1000e-004	8.1000e-004		8.1000e-004	8.1000e-004	0.0000	53.0071	53.0071	0.0142	0.0000	53.3060
Total	**0.0102**	**0.1970**	**0.3335**	**6.3000e-004**		**8.1000e-004**	**8.1000e-004**		**8.1000e-004**	**8.1000e-004**	**0.0000**	**53.0071**	**53.0071**	**0.0142**	**0.0000**	**53.3060**

3.24 Year -2 Month 11 - 2018

Mitigated Construction Off-Site

	ROG	NOx	CO	SO2	Fugitive PM10	Exhaust PM10	PM10 Total	Fugitive PM2.5	Exhaust PM2.5	PM2.5 Total	Bio- CO2	NBio- CO2	Total CO2	CH4	N2O	CO2e
Category	tons/yr										MT/yr					
Hauling	0.0000	0.0000	0.0000	0.0000	0.0000	0.0000	0.0000	0.0000	0.0000	0.0000	0.0000	0.0000	0.0000	0.0000	0.0000	0.0000
Vendor	0.0000	0.0000	0.0000	0.0000	0.0000	0.0000	0.0000	0.0000	0.0000	0.0000	0.0000	0.0000	0.0000	0.0000	0.0000	0.0000
Worker	0.0000	0.0000	0.0000	0.0000	0.0000	0.0000	0.0000	0.0000	0.0000	0.0000	0.0000	0.0000	0.0000	0.0000	0.0000	0.0000
Total	**0.0000**	**0.0000**	**0.0000**	**0.0000**	**0.0000**	**0.0000**	**0.0000**	**0.0000**	**0.0000**	**0.0000**	**0.0000**	**0.0000**	**0.0000**	**0.0000**	**0.0000**	**0.0000**

3.25 Year -2 Month 12 - 2018

Unmitigated Construction On-Site

	ROG	NOx	CO	SO2	Fugitive PM10	Exhaust PM10	PM10 Total	Fugitive PM2.5	Exhaust PM2.5	PM2.5 Total	Bio- CO2	NBio- CO2	Total CO2	CH4	N2O	CO2e
Category	tons/yr										MT/yr					
Off-Road	0.0546	0.3931	0.3006	4.8000e-004		0.0239	0.0239		0.0224	0.0224	0.0000	41.3041	41.3041	0.0117	0.0000	41.5503
Total	**0.0546**	**0.3931**	**0.3006**	**4.8000e-004**		**0.0239**	**0.0239**		**0.0224**	**0.0224**	**0.0000**	**41.3041**	**41.3041**	**0.0117**	**0.0000**	**41.5503**

3.25 Year -2 Month 12 - 2018

Unmitigated Construction Off-Site

	ROG	NOx	CO	SO2	Fugitive PM10	Exhaust PM10	PM10 Total	Fugitive PM2.5	Exhaust PM2.5	PM2.5 Total	Bio- CO2	NBio- CO2	Total CO2	CH4	N2O	CO2e
Category	tons/yr										MT/yr					
Hauling	0.0000	0.0000	0.0000	0.0000	0.0000	0.0000	0.0000	0.0000	0.0000	0.0000	0.0000	0.0000	0.0000	0.0000	0.0000	0.0000
Vendor	0.0000	0.0000	0.0000	0.0000	0.0000	0.0000	0.0000	0.0000	0.0000	0.0000	0.0000	0.0000	0.0000	0.0000	0.0000	0.0000
Worker	0.0000	0.0000	0.0000	0.0000	0.0000	0.0000	0.0000	0.0000	0.0000	0.0000	0.0000	0.0000	0.0000	0.0000	0.0000	0.0000
Total	**0.0000**	**0.0000**	**0.0000**	**0.0000**	**0.0000**	**0.0000**	**0.0000**	**0.0000**	**0.0000**	**0.0000**	**0.0000**	**0.0000**	**0.0000**	**0.0000**	**0.0000**	**0.0000**

Mitigated Construction On-Site

	ROG	NOx	CO	SO2	Fugitive PM10	Exhaust PM10	PM10 Total	Fugitive PM2.5	Exhaust PM2.5	PM2.5 Total	Bio- CO2	NBio- CO2	Total CO2	CH4	N2O	CO2e
Category	tons/yr										MT/yr					
Off-Road	7.9300e-003	0.1447	0.2604	4.8000e-004		6.6000e-004	6.6000e-004		6.6000e-004	6.6000e-004	0.0000	41.3041	41.3041	0.0117	0.0000	41.5502
Total	**7.9300e-003**	**0.1447**	**0.2604**	**4.8000e-004**		**6.6000e-004**	**6.6000e-004**		**6.6000e-004**	**6.6000e-004**	**0.0000**	**41.3041**	**41.3041**	**0.0117**	**0.0000**	**41.5502**

3.25 Year -2 Month 12 - 2018

Mitigated Construction Off-Site

	ROG	NOx	CO	SO2	Fugitive PM10	Exhaust PM10	PM10 Total	Fugitive PM2.5	Exhaust PM2.5	PM2.5 Total	Bio- CO2	NBio- CO2	Total CO2	CH4	N2O	CO2e
Category	tons/yr										MT/yr					
Hauling	0.0000	0.0000	0.0000	0.0000	0.0000	0.0000	0.0000	0.0000	0.0000	0.0000	0.0000	0.0000	0.0000	0.0000	0.0000	0.0000
Vendor	0.0000	0.0000	0.0000	0.0000	0.0000	0.0000	0.0000	0.0000	0.0000	0.0000	0.0000	0.0000	0.0000	0.0000	0.0000	0.0000
Worker	0.0000	0.0000	0.0000	0.0000	0.0000	0.0000	0.0000	0.0000	0.0000	0.0000	0.0000	0.0000	0.0000	0.0000	0.0000	0.0000
Total	**0.0000**	**0.0000**	**0.0000**	**0.0000**	**0.0000**	**0.0000**	**0.0000**	**0.0000**	**0.0000**	**0.0000**	**0.0000**	**0.0000**	**0.0000**	**0.0000**	**0.0000**	**0.0000**

3.26 Year -1 Month 1 - 2019

Unmitigated Construction On-Site

	ROG	NOx	CO	SO2	Fugitive PM10	Exhaust PM10	PM10 Total	Fugitive PM2.5	Exhaust PM2.5	PM2.5 Total	Bio- CO2	NBio- CO2	Total CO2	CH4	N2O	CO2e
Category	tons/yr										MT/yr					
Off-Road	0.1405	1.3310	0.9468	1.6600e-003		0.0685	0.0685		0.0634	0.0634	0.0000	146.3726	146.3726	0.0447	0.0000	147.3113
Total	**0.1405**	**1.3310**	**0.9468**	**1.6600e-003**		**0.0685**	**0.0685**		**0.0634**	**0.0634**	**0.0000**	**146.3726**	**146.3726**	**0.0447**	**0.0000**	**147.3113**

3.26 Year -1 Month 1 - 2019

Unmitigated Construction Off-Site

	ROG	NOx	CO	SO2	Fugitive PM10	Exhaust PM10	PM10 Total	Fugitive PM2.5	Exhaust PM2.5	PM2.5 Total	Bio- CO2	NBio- CO2	Total CO2	CH4	N2O	CO2e
Category	tons/yr										MT/yr					
Hauling	0.0000	0.0000	0.0000	0.0000	0.0000	0.0000	0.0000	0.0000	0.0000	0.0000	0.0000	0.0000	0.0000	0.0000	0.0000	0.0000
Vendor	0.0000	0.0000	0.0000	0.0000	0.0000	0.0000	0.0000	0.0000	0.0000	0.0000	0.0000	0.0000	0.0000	0.0000	0.0000	0.0000
Worker	0.0000	0.0000	0.0000	0.0000	0.0000	0.0000	0.0000	0.0000	0.0000	0.0000	0.0000	0.0000	0.0000	0.0000	0.0000	0.0000
Total	**0.0000**	**0.0000**	**0.0000**	**0.0000**	**0.0000**	**0.0000**	**0.0000**	**0.0000**	**0.0000**	**0.0000**	**0.0000**	**0.0000**	**0.0000**	**0.0000**	**0.0000**	**0.0000**

Mitigated Construction On-Site

	ROG	NOx	CO	SO2	Fugitive PM10	Exhaust PM10	PM10 Total	Fugitive PM2.5	Exhaust PM2.5	PM2.5 Total	Bio- CO2	NBio- CO2	Total CO2	CH4	N2O	CO2e
Category	tons/yr										MT/yr					
Off-Road	0.0244	0.2923	1.0094	1.6600e-003		2.5800e-003	2.5800e-003		2.5800e-003	2.5800e-003	0.0000	146.3724	146.3724	0.0447	0.0000	147.3111
Total	**0.0244**	**0.2923**	**1.0094**	**1.6600e-003**		**2.5800e-003**	**2.5800e-003**		**2.5800e-003**	**2.5800e-003**	**0.0000**	**146.3724**	**146.3724**	**0.0447**	**0.0000**	**147.3111**

3.26 Year -1 Month 1 - 2019

Mitigated Construction Off-Site

	ROG	NOx	CO	SO2	Fugitive PM10	Exhaust PM10	PM10 Total	Fugitive PM2.5	Exhaust PM2.5	PM2.5 Total	Bio- CO2	NBio- CO2	Total CO2	CH4	N2O	CO2e
Category	tons/yr										MT/yr					
Hauling	0.0000	0.0000	0.0000	0.0000	0.0000	0.0000	0.0000	0.0000	0.0000	0.0000	0.0000	0.0000	0.0000	0.0000	0.0000	0.0000
Vendor	0.0000	0.0000	0.0000	0.0000	0.0000	0.0000	0.0000	0.0000	0.0000	0.0000	0.0000	0.0000	0.0000	0.0000	0.0000	0.0000
Worker	0.0000	0.0000	0.0000	0.0000	0.0000	0.0000	0.0000	0.0000	0.0000	0.0000	0.0000	0.0000	0.0000	0.0000	0.0000	0.0000
Total	**0.0000**	**0.0000**	**0.0000**	**0.0000**	**0.0000**	**0.0000**	**0.0000**	**0.0000**	**0.0000**	**0.0000**	**0.0000**	**0.0000**	**0.0000**	**0.0000**	**0.0000**	**0.0000**

3.27 Year -1 Month 2 - 2019

Unmitigated Construction On-Site

	ROG	NOx	CO	SO2	Fugitive PM10	Exhaust PM10	PM10 Total	Fugitive PM2.5	Exhaust PM2.5	PM2.5 Total	Bio- CO2	NBio- CO2	Total CO2	CH4	N2O	CO2e
Category	tons/yr										MT/yr					
Off-Road	0.2798	2.7842	1.7932	3.1400e-003		0.1415	0.1415		0.1309	0.1309	0.0000	277.7266	277.7266	0.0850	0.0000	279.5117
Total	**0.2798**	**2.7842**	**1.7932**	**3.1400e-003**		**0.1415**	**0.1415**		**0.1309**	**0.1309**	**0.0000**	**277.7266**	**277.7266**	**0.0850**	**0.0000**	**279.5117**

3.27 Year -1 Month 2 - 2019

Unmitigated Construction Off-Site

	ROG	NOx	CO	SO2	Fugitive PM10	Exhaust PM10	PM10 Total	Fugitive PM2.5	Exhaust PM2.5	PM2.5 Total	Bio- CO2	NBio- CO2	Total CO2	CH4	N2O	CO2e
Category	tons/yr										MT/yr					
Hauling	0.0000	0.0000	0.0000	0.0000	0.0000	0.0000	0.0000	0.0000	0.0000	0.0000	0.0000	0.0000	0.0000	0.0000	0.0000	0.0000
Vendor	0.0000	0.0000	0.0000	0.0000	0.0000	0.0000	0.0000	0.0000	0.0000	0.0000	0.0000	0.0000	0.0000	0.0000	0.0000	0.0000
Worker	0.0000	0.0000	0.0000	0.0000	0.0000	0.0000	0.0000	0.0000	0.0000	0.0000	0.0000	0.0000	0.0000	0.0000	0.0000	0.0000
Total	**0.0000**	**0.0000**	**0.0000**	**0.0000**	**0.0000**	**0.0000**	**0.0000**	**0.0000**	**0.0000**	**0.0000**	**0.0000**	**0.0000**	**0.0000**	**0.0000**	**0.0000**	**0.0000**

Mitigated Construction On-Site

	ROG	NOx	CO	SO2	Fugitive PM10	Exhaust PM10	PM10 Total	Fugitive PM2.5	Exhaust PM2.5	PM2.5 Total	Bio- CO2	NBio- CO2	Total CO2	CH4	N2O	CO2e
Category	tons/yr										MT/yr					
Off-Road	0.0444	0.4669	1.9095	3.1400e-003		4.9300e-003	4.9300e-003		4.9300e-003	4.9300e-003	0.0000	277.7263	277.7263	0.0850	0.0000	279.5114
Total	**0.0444**	**0.4669**	**1.9095**	**3.1400e-003**		**4.9300e-003**	**4.9300e-003**		**4.9300e-003**	**4.9300e-003**	**0.0000**	**277.7263**	**277.7263**	**0.0850**	**0.0000**	**279.5114**

3.27 Year -1 Month 2 - 2019

Mitigated Construction Off-Site

	ROG	NOx	CO	SO2	Fugitive PM10	Exhaust PM10	PM10 Total	Fugitive PM2.5	Exhaust PM2.5	PM2.5 Total	Bio- CO2	NBio- CO2	Total CO2	CH4	N2O	CO2e
Category	tons/yr										MT/yr					
Hauling	0.0000	0.0000	0.0000	0.0000	0.0000	0.0000	0.0000	0.0000	0.0000	0.0000	0.0000	0.0000	0.0000	0.0000	0.0000	0.0000
Vendor	0.0000	0.0000	0.0000	0.0000	0.0000	0.0000	0.0000	0.0000	0.0000	0.0000	0.0000	0.0000	0.0000	0.0000	0.0000	0.0000
Worker	0.0000	0.0000	0.0000	0.0000	0.0000	0.0000	0.0000	0.0000	0.0000	0.0000	0.0000	0.0000	0.0000	0.0000	0.0000	0.0000
Total	**0.0000**	**0.0000**	**0.0000**	**0.0000**	**0.0000**	**0.0000**	**0.0000**	**0.0000**	**0.0000**	**0.0000**	**0.0000**	**0.0000**	**0.0000**	**0.0000**	**0.0000**	**0.0000**

3.28 Year -1 Month 3 - 2019

Unmitigated Construction On-Site

	ROG	NOx	CO	SO2	Fugitive PM10	Exhaust PM10	PM10 Total	Fugitive PM2.5	Exhaust PM2.5	PM2.5 Total	Bio- CO2	NBio- CO2	Total CO2	CH4	N2O	CO2e
Category	tons/yr										MT/yr					
Off-Road	0.6575	5.6950	3.7606	7.1300e-003		0.2780	0.2780		0.2606	0.2606	0.0000	615.2129	615.2129	0.1772	0.0000	618.9331
Total	**0.6575**	**5.6950**	**3.7606**	**7.1300e-003**		**0.2780**	**0.2780**		**0.2606**	**0.2606**	**0.0000**	**615.2129**	**615.2129**	**0.1772**	**0.0000**	**618.9331**

3.28 Year -1 Month 3 - 2019

Unmitigated Construction Off-Site

	ROG	NOx	CO	SO2	Fugitive PM10	Exhaust PM10	PM10 Total	Fugitive PM2.5	Exhaust PM2.5	PM2.5 Total	Bio- CO2	NBio- CO2	Total CO2	CH4	N2O	CO2e
Category	tons/yr										MT/yr					
Hauling	0.0000	0.0000	0.0000	0.0000	0.0000	0.0000	0.0000	0.0000	0.0000	0.0000	0.0000	0.0000	0.0000	0.0000	0.0000	0.0000
Vendor	0.0000	0.0000	0.0000	0.0000	0.0000	0.0000	0.0000	0.0000	0.0000	0.0000	0.0000	0.0000	0.0000	0.0000	0.0000	0.0000
Worker	0.0000	0.0000	0.0000	0.0000	0.0000	0.0000	0.0000	0.0000	0.0000	0.0000	0.0000	0.0000	0.0000	0.0000	0.0000	0.0000
Total	**0.0000**	**0.0000**	**0.0000**	**0.0000**	**0.0000**	**0.0000**	**0.0000**	**0.0000**	**0.0000**	**0.0000**	**0.0000**	**0.0000**	**0.0000**	**0.0000**	**0.0000**	**0.0000**

Mitigated Construction On-Site

	ROG	NOx	CO	SO2	Fugitive PM10	Exhaust PM10	PM10 Total	Fugitive PM2.5	Exhaust PM2.5	PM2.5 Total	Bio- CO2	NBio- CO2	Total CO2	CH4	N2O	CO2e
Category	tons/yr										MT/yr					
Off-Road	0.0998	1.1531	3.9644	7.1300e-003		0.0107	0.0107		0.0107	0.0107	0.0000	615.2121	615.2121	0.1772	0.0000	618.9323
Total	**0.0998**	**1.1531**	**3.9644**	**7.1300e-003**		**0.0107**	**0.0107**		**0.0107**	**0.0107**	**0.0000**	**615.2121**	**615.2121**	**0.1772**	**0.0000**	**618.9323**

3.28 Year -1 Month 3 - 2019

Mitigated Construction Off-Site

	ROG	NOx	CO	SO2	Fugitive PM10	Exhaust PM10	PM10 Total	Fugitive PM2.5	Exhaust PM2.5	PM2.5 Total	Bio- CO2	NBio- CO2	Total CO2	CH4	N2O	CO2e
Category	tons/yr										MT/yr					
Hauling	0.0000	0.0000	0.0000	0.0000	0.0000	0.0000	0.0000	0.0000	0.0000	0.0000	0.0000	0.0000	0.0000	0.0000	0.0000	0.0000
Vendor	0.0000	0.0000	0.0000	0.0000	0.0000	0.0000	0.0000	0.0000	0.0000	0.0000	0.0000	0.0000	0.0000	0.0000	0.0000	0.0000
Worker	0.0000	0.0000	0.0000	0.0000	0.0000	0.0000	0.0000	0.0000	0.0000	0.0000	0.0000	0.0000	0.0000	0.0000	0.0000	0.0000
Total	**0.0000**	**0.0000**	**0.0000**	**0.0000**	**0.0000**	**0.0000**	**0.0000**	**0.0000**	**0.0000**	**0.0000**	**0.0000**	**0.0000**	**0.0000**	**0.0000**	**0.0000**	**0.0000**

3.29 Year -1 Month 4 - 2019

Unmitigated Construction On-Site

	ROG	NOx	CO	SO2	Fugitive PM10	Exhaust PM10	PM10 Total	Fugitive PM2.5	Exhaust PM2.5	PM2.5 Total	Bio- CO2	NBio- CO2	Total CO2	CH4	N2O	CO2e
Category	tons/yr										MT/yr					
Off-Road	0.6013	5.5518	3.5396	6.8400e-003		0.2675	0.2675		0.2495	0.2495	0.0000	596.3098	596.3098	0.1761	0.0000	600.0083
Total	**0.6013**	**5.5518**	**3.5396**	**6.8400e-003**		**0.2675**	**0.2675**		**0.2495**	**0.2495**	**0.0000**	**596.3098**	**596.3098**	**0.1761**	**0.0000**	**600.0083**

3.29 Year -1 Month 4 - 2019

Unmitigated Construction Off-Site

	ROG	NOx	CO	SO2	Fugitive PM10	Exhaust PM10	PM10 Total	Fugitive PM2.5	Exhaust PM2.5	PM2.5 Total	Bio- CO2	NBio- CO2	Total CO2	CH4	N2O	CO2e
Category	tons/yr										MT/yr					
Hauling	0.0000	0.0000	0.0000	0.0000	0.0000	0.0000	0.0000	0.0000	0.0000	0.0000	0.0000	0.0000	0.0000	0.0000	0.0000	0.0000
Vendor	0.0000	0.0000	0.0000	0.0000	0.0000	0.0000	0.0000	0.0000	0.0000	0.0000	0.0000	0.0000	0.0000	0.0000	0.0000	0.0000
Worker	0.0000	0.0000	0.0000	0.0000	0.0000	0.0000	0.0000	0.0000	0.0000	0.0000	0.0000	0.0000	0.0000	0.0000	0.0000	0.0000
Total	**0.0000**	**0.0000**	**0.0000**	**0.0000**	**0.0000**	**0.0000**	**0.0000**	**0.0000**	**0.0000**	**0.0000**	**0.0000**	**0.0000**	**0.0000**	**0.0000**	**0.0000**	**0.0000**

Mitigated Construction On-Site

	ROG	NOx	CO	SO2	Fugitive PM10	Exhaust PM10	PM10 Total	Fugitive PM2.5	Exhaust PM2.5	PM2.5 Total	Bio- CO2	NBio- CO2	Total CO2	CH4	N2O	CO2e
Category	tons/yr										MT/yr					
Off-Road	0.0934	0.9715	3.7947	6.8400e-003		0.0104	0.0104		0.0104	0.0104	0.0000	596.3091	596.3091	0.1761	0.0000	600.0076
Total	**0.0934**	**0.9715**	**3.7947**	**6.8400e-003**		**0.0104**	**0.0104**		**0.0104**	**0.0104**	**0.0000**	**596.3091**	**596.3091**	**0.1761**	**0.0000**	**600.0076**

3.29 Year -1 Month 4 - 2019

Mitigated Construction Off-Site

	ROG	NOx	CO	SO2	Fugitive PM10	Exhaust PM10	PM10 Total	Fugitive PM2.5	Exhaust PM2.5	PM2.5 Total	Bio- CO2	NBio- CO2	Total CO2	CH4	N2O	CO2e
Category	tons/yr										MT/yr					
Hauling	0.0000	0.0000	0.0000	0.0000	0.0000	0.0000	0.0000	0.0000	0.0000	0.0000	0.0000	0.0000	0.0000	0.0000	0.0000	0.0000
Vendor	0.0000	0.0000	0.0000	0.0000	0.0000	0.0000	0.0000	0.0000	0.0000	0.0000	0.0000	0.0000	0.0000	0.0000	0.0000	0.0000
Worker	0.0000	0.0000	0.0000	0.0000	0.0000	0.0000	0.0000	0.0000	0.0000	0.0000	0.0000	0.0000	0.0000	0.0000	0.0000	0.0000
Total	**0.0000**	**0.0000**	**0.0000**	**0.0000**	**0.0000**	**0.0000**	**0.0000**	**0.0000**	**0.0000**	**0.0000**	**0.0000**	**0.0000**	**0.0000**	**0.0000**	**0.0000**	**0.0000**

3.30 Year -1 Month 5 - 2019

Unmitigated Construction On-Site

	ROG	NOx	CO	SO2	Fugitive PM10	Exhaust PM10	PM10 Total	Fugitive PM2.5	Exhaust PM2.5	PM2.5 Total	Bio- CO2	NBio- CO2	Total CO2	CH4	N2O	CO2e
Category	tons/yr										MT/yr					
Off-Road	0.6509	5.9327	3.8080	7.3900e-003		0.2852	0.2852		0.2663	0.2663	0.0000	642.7247	642.7247	0.1888	0.0000	646.6903
Total	**0.6509**	**5.9327**	**3.8080**	**7.3900e-003**		**0.2852**	**0.2852**		**0.2663**	**0.2663**	**0.0000**	**642.7247**	**642.7247**	**0.1888**	**0.0000**	**646.6903**

3.30 Year -1 Month 5 - 2019

Unmitigated Construction Off-Site

	ROG	NOx	CO	SO2	Fugitive PM10	Exhaust PM10	PM10 Total	Fugitive PM2.5	Exhaust PM2.5	PM2.5 Total	Bio- CO2	NBio- CO2	Total CO2	CH4	N2O	CO2e
Category	tons/yr										MT/yr					
Hauling	0.0000	0.0000	0.0000	0.0000	0.0000	0.0000	0.0000	0.0000	0.0000	0.0000	0.0000	0.0000	0.0000	0.0000	0.0000	0.0000
Vendor	0.0000	0.0000	0.0000	0.0000	0.0000	0.0000	0.0000	0.0000	0.0000	0.0000	0.0000	0.0000	0.0000	0.0000	0.0000	0.0000
Worker	0.0000	0.0000	0.0000	0.0000	0.0000	0.0000	0.0000	0.0000	0.0000	0.0000	0.0000	0.0000	0.0000	0.0000	0.0000	0.0000
Total	**0.0000**	**0.0000**	**0.0000**	**0.0000**	**0.0000**	**0.0000**	**0.0000**	**0.0000**	**0.0000**	**0.0000**	**0.0000**	**0.0000**	**0.0000**	**0.0000**	**0.0000**	**0.0000**

Mitigated Construction On-Site

	ROG	NOx	CO	SO2	Fugitive PM10	Exhaust PM10	PM10 Total	Fugitive PM2.5	Exhaust PM2.5	PM2.5 Total	Bio- CO2	NBio- CO2	Total CO2	CH4	N2O	CO2e
Category	tons/yr										MT/yr					
Off-Road	0.1007	1.0516	4.0763	7.3900e-003		0.0112	0.0112		0.0112	0.0112	0.0000	642.7239	642.7239	0.1888	0.0000	646.6895
Total	**0.1007**	**1.0516**	**4.0763**	**7.3900e-003**		**0.0112**	**0.0112**		**0.0112**	**0.0112**	**0.0000**	**642.7239**	**642.7239**	**0.1888**	**0.0000**	**646.6895**

3.30 Year -1 Month 5 - 2019

Mitigated Construction Off-Site

	ROG	NOx	CO	SO2	Fugitive PM10	Exhaust PM10	PM10 Total	Fugitive PM2.5	Exhaust PM2.5	PM2.5 Total	Bio- CO2	NBio- CO2	Total CO2	CH4	N2O	CO2e
Category	tons/yr										MT/yr					
Hauling	0.0000	0.0000	0.0000	0.0000	0.0000	0.0000	0.0000	0.0000	0.0000	0.0000	0.0000	0.0000	0.0000	0.0000	0.0000	0.0000
Vendor	0.0000	0.0000	0.0000	0.0000	0.0000	0.0000	0.0000	0.0000	0.0000	0.0000	0.0000	0.0000	0.0000	0.0000	0.0000	0.0000
Worker	0.0000	0.0000	0.0000	0.0000	0.0000	0.0000	0.0000	0.0000	0.0000	0.0000	0.0000	0.0000	0.0000	0.0000	0.0000	0.0000
Total	**0.0000**	**0.0000**	**0.0000**	**0.0000**	**0.0000**	**0.0000**	**0.0000**	**0.0000**	**0.0000**	**0.0000**	**0.0000**	**0.0000**	**0.0000**	**0.0000**	**0.0000**	**0.0000**

3.31 Year -1 Month 6 - 2019

Unmitigated Construction On-Site

	ROG	NOx	CO	SO2	Fugitive PM10	Exhaust PM10	PM10 Total	Fugitive PM2.5	Exhaust PM2.5	PM2.5 Total	Bio- CO2	NBio- CO2	Total CO2	CH4	N2O	CO2e
Category	tons/yr										MT/yr					
Off-Road	0.6229	5.7005	3.6255	7.1300e-003		0.2731	0.2731		0.2549	0.2549	0.0000	620.6199	620.6199	0.1825	0.0000	624.4521
Total	**0.6229**	**5.7005**	**3.6255**	**7.1300e-003**		**0.2731**	**0.2731**		**0.2549**	**0.2549**	**0.0000**	**620.6199**	**620.6199**	**0.1825**	**0.0000**	**624.4521**

3.31 Year -1 Month 6 - 2019

Unmitigated Construction Off-Site

	ROG	NOx	CO	SO2	Fugitive PM10	Exhaust PM10	PM10 Total	Fugitive PM2.5	Exhaust PM2.5	PM2.5 Total	Bio- CO2	NBio- CO2	Total CO2	CH4	N2O	CO2e
Category	tons/yr										MT/yr					
Hauling	0.0000	0.0000	0.0000	0.0000	0.0000	0.0000	0.0000	0.0000	0.0000	0.0000	0.0000	0.0000	0.0000	0.0000	0.0000	0.0000
Vendor	0.0000	0.0000	0.0000	0.0000	0.0000	0.0000	0.0000	0.0000	0.0000	0.0000	0.0000	0.0000	0.0000	0.0000	0.0000	0.0000
Worker	0.0000	0.0000	0.0000	0.0000	0.0000	0.0000	0.0000	0.0000	0.0000	0.0000	0.0000	0.0000	0.0000	0.0000	0.0000	0.0000
Total	**0.0000**	**0.0000**	**0.0000**	**0.0000**	**0.0000**	**0.0000**	**0.0000**	**0.0000**	**0.0000**	**0.0000**	**0.0000**	**0.0000**	**0.0000**	**0.0000**	**0.0000**	**0.0000**

Mitigated Construction On-Site

	ROG	NOx	CO	SO2	Fugitive PM10	Exhaust PM10	PM10 Total	Fugitive PM2.5	Exhaust PM2.5	PM2.5 Total	Bio- CO2	NBio- CO2	Total CO2	CH4	N2O	CO2e
Category	tons/yr										MT/yr					
Off-Road	0.0966	0.9952	3.8891	7.1300e-003		0.0108	0.0108		0.0108	0.0108	0.0000	620.6192	620.6192	0.1825	0.0000	624.4514
Total	**0.0966**	**0.9952**	**3.8891**	**7.1300e-003**		**0.0108**	**0.0108**		**0.0108**	**0.0108**	**0.0000**	**620.6192**	**620.6192**	**0.1825**	**0.0000**	**624.4514**

3.31 Year -1 Month 6 - 2019

Mitigated Construction Off-Site

	ROG	NOx	CO	SO2	Fugitive PM10	Exhaust PM10	PM10 Total	Fugitive PM2.5	Exhaust PM2.5	PM2.5 Total	Bio- CO2	NBio- CO2	Total CO2	CH4	N2O	CO2e
Category	tons/yr										MT/yr					
Hauling	0.0000	0.0000	0.0000	0.0000	0.0000	0.0000	0.0000	0.0000	0.0000	0.0000	0.0000	0.0000	0.0000	0.0000	0.0000	0.0000
Vendor	0.0000	0.0000	0.0000	0.0000	0.0000	0.0000	0.0000	0.0000	0.0000	0.0000	0.0000	0.0000	0.0000	0.0000	0.0000	0.0000
Worker	0.0000	0.0000	0.0000	0.0000	0.0000	0.0000	0.0000	0.0000	0.0000	0.0000	0.0000	0.0000	0.0000	0.0000	0.0000	0.0000
Total	**0.0000**	**0.0000**	**0.0000**	**0.0000**	**0.0000**	**0.0000**	**0.0000**	**0.0000**	**0.0000**	**0.0000**	**0.0000**	**0.0000**	**0.0000**	**0.0000**	**0.0000**	**0.0000**

3.32 Year -1 Month 7 - 2019

Unmitigated Construction On-Site

	ROG	NOx	CO	SO2	Fugitive PM10	Exhaust PM10	PM10 Total	Fugitive PM2.5	Exhaust PM2.5	PM2.5 Total	Bio- CO2	NBio- CO2	Total CO2	CH4	N2O	CO2e
Category	tons/yr										MT/yr					
Off-Road	0.6727	6.1565	3.9156	7.7000e-003		0.2949	0.2949		0.2753	0.2753	0.0000	670.2695	670.2695	0.1971	0.0000	674.4083
Total	**0.6727**	**6.1565**	**3.9156**	**7.7000e-003**		**0.2949**	**0.2949**		**0.2753**	**0.2753**	**0.0000**	**670.2695**	**670.2695**	**0.1971**	**0.0000**	**674.4083**

3.32 Year -1 Month 7 - 2019

Unmitigated Construction Off-Site

	ROG	NOx	CO	SO2	Fugitive PM10	Exhaust PM10	PM10 Total	Fugitive PM2.5	Exhaust PM2.5	PM2.5 Total	Bio- CO2	NBio- CO2	Total CO2	CH4	N2O	CO2e
Category	tons/yr										MT/yr					
Hauling	0.0000	0.0000	0.0000	0.0000	0.0000	0.0000	0.0000	0.0000	0.0000	0.0000	0.0000	0.0000	0.0000	0.0000	0.0000	0.0000
Vendor	0.0000	0.0000	0.0000	0.0000	0.0000	0.0000	0.0000	0.0000	0.0000	0.0000	0.0000	0.0000	0.0000	0.0000	0.0000	0.0000
Worker	0.0000	0.0000	0.0000	0.0000	0.0000	0.0000	0.0000	0.0000	0.0000	0.0000	0.0000	0.0000	0.0000	0.0000	0.0000	0.0000
Total	**0.0000**	**0.0000**	**0.0000**	**0.0000**	**0.0000**	**0.0000**	**0.0000**	**0.0000**	**0.0000**	**0.0000**	**0.0000**	**0.0000**	**0.0000**	**0.0000**	**0.0000**	**0.0000**

Mitigated Construction On-Site

	ROG	NOx	CO	SO2	Fugitive PM10	Exhaust PM10	PM10 Total	Fugitive PM2.5	Exhaust PM2.5	PM2.5 Total	Bio- CO2	NBio- CO2	Total CO2	CH4	N2O	CO2e
Category	tons/yr										MT/yr					
Off-Road	0.1044	1.0749	4.2002	7.7000e-003		0.0117	0.0117		0.0117	0.0117	0.0000	670.2687	670.2687	0.1971	0.0000	674.4075
Total	**0.1044**	**1.0749**	**4.2002**	**7.7000e-003**		**0.0117**	**0.0117**		**0.0117**	**0.0117**	**0.0000**	**670.2687**	**670.2687**	**0.1971**	**0.0000**	**674.4075**

3.32 Year -1 Month 7 - 2019

Mitigated Construction Off-Site

	ROG	NOx	CO	SO2	Fugitive PM10	Exhaust PM10	PM10 Total	Fugitive PM2.5	Exhaust PM2.5	PM2.5 Total	Bio- CO2	NBio- CO2	Total CO2	CH4	N2O	CO2e
Category	tons/yr										MT/yr					
Hauling	0.0000	0.0000	0.0000	0.0000	0.0000	0.0000	0.0000	0.0000	0.0000	0.0000	0.0000	0.0000	0.0000	0.0000	0.0000	0.0000
Vendor	0.0000	0.0000	0.0000	0.0000	0.0000	0.0000	0.0000	0.0000	0.0000	0.0000	0.0000	0.0000	0.0000	0.0000	0.0000	0.0000
Worker	0.0000	0.0000	0.0000	0.0000	0.0000	0.0000	0.0000	0.0000	0.0000	0.0000	0.0000	0.0000	0.0000	0.0000	0.0000	0.0000
Total	**0.0000**	**0.0000**	**0.0000**	**0.0000**	**0.0000**	**0.0000**	**0.0000**	**0.0000**	**0.0000**	**0.0000**	**0.0000**	**0.0000**	**0.0000**	**0.0000**	**0.0000**	**0.0000**

3.33 Year -1 Month 8 - 2019

Unmitigated Construction On-Site

	ROG	NOx	CO	SO2	Fugitive PM10	Exhaust PM10	PM10 Total	Fugitive PM2.5	Exhaust PM2.5	PM2.5 Total	Bio- CO2	NBio- CO2	Total CO2	CH4	N2O	CO2e
Category	tons/yr										MT/yr					
Off-Road	0.5874	5.3361	3.3735	6.5500e-003		0.2583	0.2583		0.2410	0.2410	0.0000	570.1117	570.1117	0.1677	0.0000	573.6335
Total	**0.5874**	**5.3361**	**3.3735**	**6.5500e-003**		**0.2583**	**0.2583**		**0.2410**	**0.2410**	**0.0000**	**570.1117**	**570.1117**	**0.1677**	**0.0000**	**573.6335**

3.33 Year -1 Month 8 - 2019

Unmitigated Construction Off-Site

	ROG	NOx	CO	SO2	Fugitive PM10	Exhaust PM10	PM10 Total	Fugitive PM2.5	Exhaust PM2.5	PM2.5 Total	Bio- CO2	NBio- CO2	Total CO2	CH4	N2O	CO2e
Category	tons/yr										MT/yr					
Hauling	0.0000	0.0000	0.0000	0.0000	0.0000	0.0000	0.0000	0.0000	0.0000	0.0000	0.0000	0.0000	0.0000	0.0000	0.0000	0.0000
Vendor	0.0000	0.0000	0.0000	0.0000	0.0000	0.0000	0.0000	0.0000	0.0000	0.0000	0.0000	0.0000	0.0000	0.0000	0.0000	0.0000
Worker	0.0000	0.0000	0.0000	0.0000	0.0000	0.0000	0.0000	0.0000	0.0000	0.0000	0.0000	0.0000	0.0000	0.0000	0.0000	0.0000
Total	**0.0000**	**0.0000**	**0.0000**	**0.0000**	**0.0000**	**0.0000**	**0.0000**	**0.0000**	**0.0000**	**0.0000**	**0.0000**	**0.0000**	**0.0000**	**0.0000**	**0.0000**	**0.0000**

Mitigated Construction On-Site

	ROG	NOx	CO	SO2	Fugitive PM10	Exhaust PM10	PM10 Total	Fugitive PM2.5	Exhaust PM2.5	PM2.5 Total	Bio- CO2	NBio- CO2	Total CO2	CH4	N2O	CO2e
Category	tons/yr										MT/yr					
Off-Road	0.0904	0.9618	3.6185	6.5500e-003		0.0100	0.0100		0.0100	0.0100	0.0000	570.1110	570.1110	0.1677	0.0000	573.6328
Total	**0.0904**	**0.9618**	**3.6185**	**6.5500e-003**		**0.0100**	**0.0100**		**0.0100**	**0.0100**	**0.0000**	**570.1110**	**570.1110**	**0.1677**	**0.0000**	**573.6328**

3.33 Year -1 Month 8 - 2019

Mitigated Construction Off-Site

	ROG	NOx	CO	SO2	Fugitive PM10	Exhaust PM10	PM10 Total	Fugitive PM2.5	Exhaust PM2.5	PM2.5 Total	Bio- CO2	NBio- CO2	Total CO2	CH4	N2O	CO2e
Category	tons/yr										MT/yr					
Hauling	0.0000	0.0000	0.0000	0.0000	0.0000	0.0000	0.0000	0.0000	0.0000	0.0000	0.0000	0.0000	0.0000	0.0000	0.0000	0.0000
Vendor	0.0000	0.0000	0.0000	0.0000	0.0000	0.0000	0.0000	0.0000	0.0000	0.0000	0.0000	0.0000	0.0000	0.0000	0.0000	0.0000
Worker	0.0000	0.0000	0.0000	0.0000	0.0000	0.0000	0.0000	0.0000	0.0000	0.0000	0.0000	0.0000	0.0000	0.0000	0.0000	0.0000
Total	**0.0000**	**0.0000**	**0.0000**	**0.0000**	**0.0000**	**0.0000**	**0.0000**	**0.0000**	**0.0000**	**0.0000**	**0.0000**	**0.0000**	**0.0000**	**0.0000**	**0.0000**	**0.0000**

3.34 Year -1 Month 9 - 2019

Unmitigated Construction On-Site

	ROG	NOx	CO	SO2	Fugitive PM10	Exhaust PM10	PM10 Total	Fugitive PM2.5	Exhaust PM2.5	PM2.5 Total	Bio- CO2	NBio- CO2	Total CO2	CH4	N2O	CO2e
Category	tons/yr										MT/yr					
Off-Road	0.5269	4.8053	3.0542	5.9500e-003		0.2310	0.2310		0.2156	0.2156	0.0000	517.7552	517.7552	0.1525	0.0000	520.9572
Total	**0.5269**	**4.8053**	**3.0542**	**5.9500e-003**		**0.2310**	**0.2310**		**0.2156**	**0.2156**	**0.0000**	**517.7552**	**517.7552**	**0.1525**	**0.0000**	**520.9572**

3.34 Year -1 Month 9 - 2019

Unmitigated Construction Off-Site

	ROG	NOx	CO	SO2	Fugitive PM10	Exhaust PM10	PM10 Total	Fugitive PM2.5	Exhaust PM2.5	PM2.5 Total	Bio- CO2	NBio- CO2	Total CO2	CH4	N2O	CO2e
Category	tons/yr										MT/yr					
Hauling	0.0000	0.0000	0.0000	0.0000	0.0000	0.0000	0.0000	0.0000	0.0000	0.0000	0.0000	0.0000	0.0000	0.0000	0.0000	0.0000
Vendor	0.0000	0.0000	0.0000	0.0000	0.0000	0.0000	0.0000	0.0000	0.0000	0.0000	0.0000	0.0000	0.0000	0.0000	0.0000	0.0000
Worker	0.0000	0.0000	0.0000	0.0000	0.0000	0.0000	0.0000	0.0000	0.0000	0.0000	0.0000	0.0000	0.0000	0.0000	0.0000	0.0000
Total	**0.0000**	**0.0000**	**0.0000**	**0.0000**	**0.0000**	**0.0000**	**0.0000**	**0.0000**	**0.0000**	**0.0000**	**0.0000**	**0.0000**	**0.0000**	**0.0000**	**0.0000**	**0.0000**

Mitigated Construction On-Site

	ROG	NOx	CO	SO2	Fugitive PM10	Exhaust PM10	PM10 Total	Fugitive PM2.5	Exhaust PM2.5	PM2.5 Total	Bio- CO2	NBio- CO2	Total CO2	CH4	N2O	CO2e
Category	tons/yr										MT/yr					
Off-Road	0.0813	0.8373	3.2935	5.9500e-003		9.0900e-003	9.0900e-003		9.0900e-003	9.0900e-003	0.0000	517.7545	517.7545	0.1525	0.0000	520.9566
Total	**0.0813**	**0.8373**	**3.2935**	**5.9500e-003**		**9.0900e-003**	**9.0900e-003**		**9.0900e-003**	**9.0900e-003**	**0.0000**	**517.7545**	**517.7545**	**0.1525**	**0.0000**	**520.9566**

3.34 Year -1 Month 9 - 2019

Mitigated Construction Off-Site

	ROG	NOx	CO	SO2	Fugitive PM10	Exhaust PM10	PM10 Total	Fugitive PM2.5	Exhaust PM2.5	PM2.5 Total	Bio- CO2	NBio- CO2	Total CO2	CH4	N2O	CO2e
Category	tons/yr										MT/yr					
Hauling	0.0000	0.0000	0.0000	0.0000	0.0000	0.0000	0.0000	0.0000	0.0000	0.0000	0.0000	0.0000	0.0000	0.0000	0.0000	0.0000
Vendor	0.0000	0.0000	0.0000	0.0000	0.0000	0.0000	0.0000	0.0000	0.0000	0.0000	0.0000	0.0000	0.0000	0.0000	0.0000	0.0000
Worker	0.0000	0.0000	0.0000	0.0000	0.0000	0.0000	0.0000	0.0000	0.0000	0.0000	0.0000	0.0000	0.0000	0.0000	0.0000	0.0000
Total	**0.0000**	**0.0000**	**0.0000**	**0.0000**	**0.0000**	**0.0000**	**0.0000**	**0.0000**	**0.0000**	**0.0000**	**0.0000**	**0.0000**	**0.0000**	**0.0000**	**0.0000**	**0.0000**

3.35 Year -1 Month 10 - 2019

Unmitigated Construction On-Site

	ROG	NOx	CO	SO2	Fugitive PM10	Exhaust PM10	PM10 Total	Fugitive PM2.5	Exhaust PM2.5	PM2.5 Total	Bio- CO2	NBio- CO2	Total CO2	CH4	N2O	CO2e
Category	tons/yr										MT/yr					
Off-Road	0.3629	3.3640	2.0471	4.0800e-003		0.1593	0.1593		0.1487	0.1487	0.0000	355.3066	355.3066	0.1047	0.0000	357.5042
Total	**0.3629**	**3.3640**	**2.0471**	**4.0800e-003**		**0.1593**	**0.1593**		**0.1487**	**0.1487**	**0.0000**	**355.3066**	**355.3066**	**0.1047**	**0.0000**	**357.5042**

3.35 Year -1 Month 10 - 2019

Unmitigated Construction Off-Site

	ROG	NOx	CO	SO2	Fugitive PM10	Exhaust PM10	PM10 Total	Fugitive PM2.5	Exhaust PM2.5	PM2.5 Total	Bio- CO2	NBio- CO2	Total CO2	CH4	N2O	CO2e
Category	tons/yr										MT/yr					
Hauling	0.0000	0.0000	0.0000	0.0000	0.0000	0.0000	0.0000	0.0000	0.0000	0.0000	0.0000	0.0000	0.0000	0.0000	0.0000	0.0000
Vendor	0.0000	0.0000	0.0000	0.0000	0.0000	0.0000	0.0000	0.0000	0.0000	0.0000	0.0000	0.0000	0.0000	0.0000	0.0000	0.0000
Worker	0.0000	0.0000	0.0000	0.0000	0.0000	0.0000	0.0000	0.0000	0.0000	0.0000	0.0000	0.0000	0.0000	0.0000	0.0000	0.0000
Total	**0.0000**	**0.0000**	**0.0000**	**0.0000**	**0.0000**	**0.0000**	**0.0000**	**0.0000**	**0.0000**	**0.0000**	**0.0000**	**0.0000**	**0.0000**	**0.0000**	**0.0000**	**0.0000**

Mitigated Construction On-Site

	ROG	NOx	CO	SO2	Fugitive PM10	Exhaust PM10	PM10 Total	Fugitive PM2.5	Exhaust PM2.5	PM2.5 Total	Bio- CO2	NBio- CO2	Total CO2	CH4	N2O	CO2e
Category	tons/yr										MT/yr					
Off-Road	0.0548	0.5378	2.2333	4.0800e-003		6.2200e-003	6.2200e-003		6.2200e-003	6.2200e-003	0.0000	355.3061	355.3061	0.1047	0.0000	357.5037
Total	**0.0548**	**0.5378**	**2.2333**	**4.0800e-003**		**6.2200e-003**	**6.2200e-003**		**6.2200e-003**	**6.2200e-003**	**0.0000**	**355.3061**	**355.3061**	**0.1047**	**0.0000**	**357.5037**

3.35 Year -1 Month 10 - 2019

Mitigated Construction Off-Site

	ROG	NOx	CO	SO2	Fugitive PM10	Exhaust PM10	PM10 Total	Fugitive PM2.5	Exhaust PM2.5	PM2.5 Total	Bio- CO2	NBio- CO2	Total CO2	CH4	N2O	CO2e
Category	tons/yr										MT/yr					
Hauling	0.0000	0.0000	0.0000	0.0000	0.0000	0.0000	0.0000	0.0000	0.0000	0.0000	0.0000	0.0000	0.0000	0.0000	0.0000	0.0000
Vendor	0.0000	0.0000	0.0000	0.0000	0.0000	0.0000	0.0000	0.0000	0.0000	0.0000	0.0000	0.0000	0.0000	0.0000	0.0000	0.0000
Worker	0.0000	0.0000	0.0000	0.0000	0.0000	0.0000	0.0000	0.0000	0.0000	0.0000	0.0000	0.0000	0.0000	0.0000	0.0000	0.0000
Total	**0.0000**	**0.0000**	**0.0000**	**0.0000**	**0.0000**	**0.0000**	**0.0000**	**0.0000**	**0.0000**	**0.0000**	**0.0000**	**0.0000**	**0.0000**	**0.0000**	**0.0000**	**0.0000**

3.36 Year -1 Month 11 - 2019

Unmitigated Construction On-Site

	ROG	NOx	CO	SO2	Fugitive PM10	Exhaust PM10	PM10 Total	Fugitive PM2.5	Exhaust PM2.5	PM2.5 Total	Bio- CO2	NBio- CO2	Total CO2	CH4	N2O	CO2e
Category	tons/yr										MT/yr					
Off-Road	0.2278	1.8523	1.3418	2.2500e-003		0.0974	0.0974		0.0913	0.0913	0.0000	192.4341	192.4341	0.0544	0.0000	193.5756
Total	**0.2278**	**1.8523**	**1.3418**	**2.2500e-003**		**0.0974**	**0.0974**		**0.0913**	**0.0913**	**0.0000**	**192.4341**	**192.4341**	**0.0544**	**0.0000**	**193.5756**

3.36 Year -1 Month 11 - 2019

Unmitigated Construction Off-Site

	ROG	NOx	CO	SO2	Fugitive PM10	Exhaust PM10	PM10 Total	Fugitive PM2.5	Exhaust PM2.5	PM2.5 Total	Bio- CO2	NBio- CO2	Total CO2	CH4	N2O	CO2e
Category	tons/yr										MT/yr					
Hauling	0.0000	0.0000	0.0000	0.0000	0.0000	0.0000	0.0000	0.0000	0.0000	0.0000	0.0000	0.0000	0.0000	0.0000	0.0000	0.0000
Vendor	0.0000	0.0000	0.0000	0.0000	0.0000	0.0000	0.0000	0.0000	0.0000	0.0000	0.0000	0.0000	0.0000	0.0000	0.0000	0.0000
Worker	0.0000	0.0000	0.0000	0.0000	0.0000	0.0000	0.0000	0.0000	0.0000	0.0000	0.0000	0.0000	0.0000	0.0000	0.0000	0.0000
Total	**0.0000**	**0.0000**	**0.0000**	**0.0000**	**0.0000**	**0.0000**	**0.0000**	**0.0000**	**0.0000**	**0.0000**	**0.0000**	**0.0000**	**0.0000**	**0.0000**	**0.0000**	**0.0000**

Mitigated Construction On-Site

	ROG	NOx	CO	SO2	Fugitive PM10	Exhaust PM10	PM10 Total	Fugitive PM2.5	Exhaust PM2.5	PM2.5 Total	Bio- CO2	NBio- CO2	Total CO2	CH4	N2O	CO2e
Category	tons/yr										MT/yr					
Off-Road	0.0314	0.3885	1.3275	2.2500e-003		3.2700e-003	3.2700e-003		3.2700e-003	3.2700e-003	0.0000	192.4339	192.4339	0.0544	0.0000	193.5754
Total	**0.0314**	**0.3885**	**1.3275**	**2.2500e-003**		**3.2700e-003**	**3.2700e-003**		**3.2700e-003**	**3.2700e-003**	**0.0000**	**192.4339**	**192.4339**	**0.0544**	**0.0000**	**193.5754**

3.36 Year -1 Month 11 - 2019

Mitigated Construction Off-Site

	ROG	NOx	CO	SO2	Fugitive PM10	Exhaust PM10	PM10 Total	Fugitive PM2.5	Exhaust PM2.5	PM2.5 Total	Bio- CO2	NBio- CO2	Total CO2	CH4	N2O	CO2e
Category	tons/yr										MT/yr					
Hauling	0.0000	0.0000	0.0000	0.0000	0.0000	0.0000	0.0000	0.0000	0.0000	0.0000	0.0000	0.0000	0.0000	0.0000	0.0000	0.0000
Vendor	0.0000	0.0000	0.0000	0.0000	0.0000	0.0000	0.0000	0.0000	0.0000	0.0000	0.0000	0.0000	0.0000	0.0000	0.0000	0.0000
Worker	0.0000	0.0000	0.0000	0.0000	0.0000	0.0000	0.0000	0.0000	0.0000	0.0000	0.0000	0.0000	0.0000	0.0000	0.0000	0.0000
Total	**0.0000**	**0.0000**	**0.0000**	**0.0000**	**0.0000**	**0.0000**	**0.0000**	**0.0000**	**0.0000**	**0.0000**	**0.0000**	**0.0000**	**0.0000**	**0.0000**	**0.0000**	**0.0000**

3.37 Year -1 Month 12 - 2019

Unmitigated Construction On-Site

	ROG	NOx	CO	SO2	Fugitive PM10	Exhaust PM10	PM10 Total	Fugitive PM2.5	Exhaust PM2.5	PM2.5 Total	Bio- CO2	NBio- CO2	Total CO2	CH4	N2O	CO2e
Category	tons/yr										MT/yr					
Off-Road	0.0862	0.6819	0.5193	9.2000e-004		0.0362	0.0362		0.0340	0.0340	0.0000	79.0364	79.0364	0.0221	0.0000	79.4999
Total	**0.0862**	**0.6819**	**0.5193**	**9.2000e-004**		**0.0362**	**0.0362**		**0.0340**	**0.0340**	**0.0000**	**79.0364**	**79.0364**	**0.0221**	**0.0000**	**79.4999**

3.37 Year -1 Month 12 - 2019

Unmitigated Construction Off-Site

	ROG	NOx	CO	SO2	Fugitive PM10	Exhaust PM10	PM10 Total	Fugitive PM2.5	Exhaust PM2.5	PM2.5 Total	Bio- CO2	NBio- CO2	Total CO2	CH4	N2O	CO2e
Category	tons/yr										MT/yr					
Hauling	0.0000	0.0000	0.0000	0.0000	0.0000	0.0000	0.0000	0.0000	0.0000	0.0000	0.0000	0.0000	0.0000	0.0000	0.0000	0.0000
Vendor	0.0000	0.0000	0.0000	0.0000	0.0000	0.0000	0.0000	0.0000	0.0000	0.0000	0.0000	0.0000	0.0000	0.0000	0.0000	0.0000
Worker	0.0000	0.0000	0.0000	0.0000	0.0000	0.0000	0.0000	0.0000	0.0000	0.0000	0.0000	0.0000	0.0000	0.0000	0.0000	0.0000
Total	**0.0000**	**0.0000**	**0.0000**	**0.0000**	**0.0000**	**0.0000**	**0.0000**	**0.0000**	**0.0000**	**0.0000**	**0.0000**	**0.0000**	**0.0000**	**0.0000**	**0.0000**	**0.0000**

Mitigated Construction On-Site

	ROG	NOx	CO	SO2	Fugitive PM10	Exhaust PM10	PM10 Total	Fugitive PM2.5	Exhaust PM2.5	PM2.5 Total	Bio- CO2	NBio- CO2	Total CO2	CH4	N2O	CO2e
Category	tons/yr										MT/yr					
Off-Road	0.0129	0.1896	0.4850	9.2000e-004		1.2400e-003	1.2400e-003		1.2400e-003	1.2400e-003	0.0000	79.0363	79.0363	0.0221	0.0000	79.4998
Total	**0.0129**	**0.1896**	**0.4850**	**9.2000e-004**		**1.2400e-003**	**1.2400e-003**		**1.2400e-003**	**1.2400e-003**	**0.0000**	**79.0363**	**79.0363**	**0.0221**	**0.0000**	**79.4998**

3.37 Year -1 Month 12 - 2019

Mitigated Construction Off-Site

	ROG	NOx	CO	SO2	Fugitive PM10	Exhaust PM10	PM10 Total	Fugitive PM2.5	Exhaust PM2.5	PM2.5 Total	Bio- CO2	NBio- CO2	Total CO2	CH4	N2O	CO2e
Category	tons/yr										MT/yr					
Hauling	0.0000	0.0000	0.0000	0.0000	0.0000	0.0000	0.0000	0.0000	0.0000	0.0000	0.0000	0.0000	0.0000	0.0000	0.0000	0.0000
Vendor	0.0000	0.0000	0.0000	0.0000	0.0000	0.0000	0.0000	0.0000	0.0000	0.0000	0.0000	0.0000	0.0000	0.0000	0.0000	0.0000
Worker	0.0000	0.0000	0.0000	0.0000	0.0000	0.0000	0.0000	0.0000	0.0000	0.0000	0.0000	0.0000	0.0000	0.0000	0.0000	0.0000
Total	**0.0000**	**0.0000**	**0.0000**	**0.0000**	**0.0000**	**0.0000**	**0.0000**	**0.0000**	**0.0000**	**0.0000**	**0.0000**	**0.0000**	**0.0000**	**0.0000**	**0.0000**	**0.0000**

3.38 Year 1 Month 1 - 2020

Unmitigated Construction On-Site

	ROG	NOx	CO	SO2	Fugitive PM10	Exhaust PM10	PM10 Total	Fugitive PM2.5	Exhaust PM2.5	PM2.5 Total	Bio- CO2	NBio- CO2	Total CO2	CH4	N2O	CO2e
Category	tons/yr										MT/yr					
Off-Road	0.0259	0.2892	0.1831	3.4000e-004		0.0136	0.0136		0.0125	0.0125	0.0000	30.1759	30.1759	9.7600e-003	0.0000	30.3809
Total	**0.0259**	**0.2892**	**0.1831**	**3.4000e-004**		**0.0136**	**0.0136**		**0.0125**	**0.0125**	**0.0000**	**30.1759**	**30.1759**	**9.7600e-003**	**0.0000**	**30.3809**

3.38 Year 1 Month 1 - 2020

Unmitigated Construction Off-Site

	ROG	NOx	CO	SO2	Fugitive PM10	Exhaust PM10	PM10 Total	Fugitive PM2.5	Exhaust PM2.5	PM2.5 Total	Bio- CO2	NBio- CO2	Total CO2	CH4	N2O	CO2e
Category	tons/yr										MT/yr					
Hauling	0.0000	0.0000	0.0000	0.0000	0.0000	0.0000	0.0000	0.0000	0.0000	0.0000	0.0000	0.0000	0.0000	0.0000	0.0000	0.0000
Vendor	0.0000	0.0000	0.0000	0.0000	0.0000	0.0000	0.0000	0.0000	0.0000	0.0000	0.0000	0.0000	0.0000	0.0000	0.0000	0.0000
Worker	0.0000	0.0000	0.0000	0.0000	0.0000	0.0000	0.0000	0.0000	0.0000	0.0000	0.0000	0.0000	0.0000	0.0000	0.0000	0.0000
Total	**0.0000**	**0.0000**	**0.0000**	**0.0000**	**0.0000**	**0.0000**	**0.0000**	**0.0000**	**0.0000**	**0.0000**	**0.0000**	**0.0000**	**0.0000**	**0.0000**	**0.0000**	**0.0000**

Mitigated Construction On-Site

	ROG	NOx	CO	SO2	Fugitive PM10	Exhaust PM10	PM10 Total	Fugitive PM2.5	Exhaust PM2.5	PM2.5 Total	Bio- CO2	NBio- CO2	Total CO2	CH4	N2O	CO2e
Category	tons/yr										MT/yr					
Off-Road	4.6700e-003	0.0366	0.2162	3.4000e-004		5.6000e-004	5.6000e-004		5.6000e-004	5.6000e-004	0.0000	30.1759	30.1759	9.7600e-003	0.0000	30.3808
Total	**4.6700e-003**	**0.0366**	**0.2162**	**3.4000e-004**		**5.6000e-004**	**5.6000e-004**		**5.6000e-004**	**5.6000e-004**	**0.0000**	**30.1759**	**30.1759**	**9.7600e-003**	**0.0000**	**30.3808**

3.38 Year 1 Month 1 - 2020

Mitigated Construction Off-Site

	ROG	NOx	CO	SO2	Fugitive PM10	Exhaust PM10	PM10 Total	Fugitive PM2.5	Exhaust PM2.5	PM2.5 Total	Bio- CO2	NBio- CO2	Total CO2	CH4	N2O	CO2e
Category	tons/yr										MT/yr					
Hauling	0.0000	0.0000	0.0000	0.0000	0.0000	0.0000	0.0000	0.0000	0.0000	0.0000	0.0000	0.0000	0.0000	0.0000	0.0000	0.0000
Vendor	0.0000	0.0000	0.0000	0.0000	0.0000	0.0000	0.0000	0.0000	0.0000	0.0000	0.0000	0.0000	0.0000	0.0000	0.0000	0.0000
Worker	0.0000	0.0000	0.0000	0.0000	0.0000	0.0000	0.0000	0.0000	0.0000	0.0000	0.0000	0.0000	0.0000	0.0000	0.0000	0.0000
Total	**0.0000**	**0.0000**	**0.0000**	**0.0000**	**0.0000**	**0.0000**	**0.0000**	**0.0000**	**0.0000**	**0.0000**	**0.0000**	**0.0000**	**0.0000**	**0.0000**	**0.0000**	**0.0000**

3.39 Year 1 Month 2 - 2020

Unmitigated Construction On-Site

	ROG	NOx	CO	SO2	Fugitive PM10	Exhaust PM10	PM10 Total	Fugitive PM2.5	Exhaust PM2.5	PM2.5 Total	Bio- CO2	NBio- CO2	Total CO2	CH4	N2O	CO2e
Category	tons/yr										MT/yr					
Off-Road	0.0683	0.6778	0.4219	8.0000e-004		0.0317	0.0317		0.0294	0.0294	0.0000	69.1917	69.1917	0.0210	0.0000	69.6331
Total	**0.0683**	**0.6778**	**0.4219**	**8.0000e-004**		**0.0317**	**0.0317**		**0.0294**	**0.0294**	**0.0000**	**69.1917**	**69.1917**	**0.0210**	**0.0000**	**69.6331**

3.39 Year 1 Month 2 - 2020

Unmitigated Construction Off-Site

	ROG	NOx	CO	SO2	Fugitive PM10	Exhaust PM10	PM10 Total	Fugitive PM2.5	Exhaust PM2.5	PM2.5 Total	Bio- CO2	NBio- CO2	Total CO2	CH4	N2O	CO2e
Category	tons/yr										MT/yr					
Hauling	0.0000	0.0000	0.0000	0.0000	0.0000	0.0000	0.0000	0.0000	0.0000	0.0000	0.0000	0.0000	0.0000	0.0000	0.0000	0.0000
Vendor	0.0000	0.0000	0.0000	0.0000	0.0000	0.0000	0.0000	0.0000	0.0000	0.0000	0.0000	0.0000	0.0000	0.0000	0.0000	0.0000
Worker	0.0000	0.0000	0.0000	0.0000	0.0000	0.0000	0.0000	0.0000	0.0000	0.0000	0.0000	0.0000	0.0000	0.0000	0.0000	0.0000
Total	**0.0000**	**0.0000**	**0.0000**	**0.0000**	**0.0000**	**0.0000**	**0.0000**	**0.0000**	**0.0000**	**0.0000**	**0.0000**	**0.0000**	**0.0000**	**0.0000**	**0.0000**	**0.0000**

Mitigated Construction On-Site

	ROG	NOx	CO	SO2	Fugitive PM10	Exhaust PM10	PM10 Total	Fugitive PM2.5	Exhaust PM2.5	PM2.5 Total	Bio- CO2	NBio- CO2	Total CO2	CH4	N2O	CO2e
Category	tons/yr										MT/yr					
Off-Road	0.0108	0.0948	0.4750	8.0000e-004		1.2700e-003	1.2700e-003		1.2700e-003	1.2700e-003	0.0000	69.1916	69.1916	0.0210	0.0000	69.6330
Total	**0.0108**	**0.0948**	**0.4750**	**8.0000e-004**		**1.2700e-003**	**1.2700e-003**		**1.2700e-003**	**1.2700e-003**	**0.0000**	**69.1916**	**69.1916**	**0.0210**	**0.0000**	**69.6330**

3.39 Year 1 Month 2 - 2020

Mitigated Construction Off-Site

	ROG	NOx	CO	SO2	Fugitive PM10	Exhaust PM10	PM10 Total	Fugitive PM2.5	Exhaust PM2.5	PM2.5 Total	Bio- CO2	NBio- CO2	Total CO2	CH4	N2O	CO2e
Category	tons/yr										MT/yr					
Hauling	0.0000	0.0000	0.0000	0.0000	0.0000	0.0000	0.0000	0.0000	0.0000	0.0000	0.0000	0.0000	0.0000	0.0000	0.0000	0.0000
Vendor	0.0000	0.0000	0.0000	0.0000	0.0000	0.0000	0.0000	0.0000	0.0000	0.0000	0.0000	0.0000	0.0000	0.0000	0.0000	0.0000
Worker	0.0000	0.0000	0.0000	0.0000	0.0000	0.0000	0.0000	0.0000	0.0000	0.0000	0.0000	0.0000	0.0000	0.0000	0.0000	0.0000
Total	**0.0000**	**0.0000**	**0.0000**	**0.0000**	**0.0000**	**0.0000**	**0.0000**	**0.0000**	**0.0000**	**0.0000**	**0.0000**	**0.0000**	**0.0000**	**0.0000**	**0.0000**	**0.0000**

3.40 Year 1 Month 3 - 2020

Unmitigated Construction On-Site

	ROG	NOx	CO	SO2	Fugitive PM10	Exhaust PM10	PM10 Total	Fugitive PM2.5	Exhaust PM2.5	PM2.5 Total	Bio- CO2	NBio- CO2	Total CO2	CH4	N2O	CO2e
Category	tons/yr										MT/yr					
Off-Road	0.0490	0.4558	0.2808	5.4000e-004		0.0213	0.0213		0.0199	0.0199	0.0000	45.8994	45.8994	0.0134	0.0000	46.1802
Total	**0.0490**	**0.4558**	**0.2808**	**5.4000e-004**		**0.0213**	**0.0213**		**0.0199**	**0.0199**	**0.0000**	**45.8994**	**45.8994**	**0.0134**	**0.0000**	**46.1802**

3.40 Year 1 Month 3 - 2020

Unmitigated Construction Off-Site

	ROG	NOx	CO	SO2	Fugitive PM10	Exhaust PM10	PM10 Total	Fugitive PM2.5	Exhaust PM2.5	PM2.5 Total	Bio- CO2	NBio- CO2	Total CO2	CH4	N2O	CO2e
Category	tons/yr										MT/yr					
Hauling	0.0000	0.0000	0.0000	0.0000	0.0000	0.0000	0.0000	0.0000	0.0000	0.0000	0.0000	0.0000	0.0000	0.0000	0.0000	0.0000
Vendor	0.0000	0.0000	0.0000	0.0000	0.0000	0.0000	0.0000	0.0000	0.0000	0.0000	0.0000	0.0000	0.0000	0.0000	0.0000	0.0000
Worker	0.0000	0.0000	0.0000	0.0000	0.0000	0.0000	0.0000	0.0000	0.0000	0.0000	0.0000	0.0000	0.0000	0.0000	0.0000	0.0000
Total	**0.0000**	**0.0000**	**0.0000**	**0.0000**	**0.0000**	**0.0000**	**0.0000**	**0.0000**	**0.0000**	**0.0000**	**0.0000**	**0.0000**	**0.0000**	**0.0000**	**0.0000**	**0.0000**

Mitigated Construction On-Site

	ROG	NOx	CO	SO2	Fugitive PM10	Exhaust PM10	PM10 Total	Fugitive PM2.5	Exhaust PM2.5	PM2.5 Total	Bio- CO2	NBio- CO2	Total CO2	CH4	N2O	CO2e
Category	tons/yr										MT/yr					
Off-Road	7.2100e-003	0.0675	0.3064	5.4000e-004		8.3000e-004	8.3000e-004		8.3000e-004	8.3000e-004	0.0000	45.8993	45.8993	0.0134	0.0000	46.1801
Total	**7.2100e-003**	**0.0675**	**0.3064**	**5.4000e-004**		**8.3000e-004**	**8.3000e-004**		**8.3000e-004**	**8.3000e-004**	**0.0000**	**45.8993**	**45.8993**	**0.0134**	**0.0000**	**46.1801**

3.40 Year 1 Month 3 - 2020

Mitigated Construction Off-Site

	ROG	NOx	CO	SO2	Fugitive PM10	Exhaust PM10	PM10 Total	Fugitive PM2.5	Exhaust PM2.5	PM2.5 Total	Bio- CO2	NBio- CO2	Total CO2	CH4	N2O	CO2e
Category	tons/yr										MT/yr					
Hauling	0.0000	0.0000	0.0000	0.0000	0.0000	0.0000	0.0000	0.0000	0.0000	0.0000	0.0000	0.0000	0.0000	0.0000	0.0000	0.0000
Vendor	0.0000	0.0000	0.0000	0.0000	0.0000	0.0000	0.0000	0.0000	0.0000	0.0000	0.0000	0.0000	0.0000	0.0000	0.0000	0.0000
Worker	0.0000	0.0000	0.0000	0.0000	0.0000	0.0000	0.0000	0.0000	0.0000	0.0000	0.0000	0.0000	0.0000	0.0000	0.0000	0.0000
Total	**0.0000**	**0.0000**	**0.0000**	**0.0000**	**0.0000**	**0.0000**	**0.0000**	**0.0000**	**0.0000**	**0.0000**	**0.0000**	**0.0000**	**0.0000**	**0.0000**	**0.0000**	**0.0000**

3.41 Year 1 Month 4 - 2020

Unmitigated Construction On-Site

	ROG	NOx	CO	SO2	Fugitive PM10	Exhaust PM10	PM10 Total	Fugitive PM2.5	Exhaust PM2.5	PM2.5 Total	Bio- CO2	NBio- CO2	Total CO2	CH4	N2O	CO2e
Category	tons/yr										MT/yr					
Off-Road	0.0562	0.5415	0.3144	6.3000e-004		0.0248	0.0248		0.0231	0.0231	0.0000	53.9586	53.9586	0.0160	0.0000	54.2942
Total	**0.0562**	**0.5415**	**0.3144**	**6.3000e-004**		**0.0248**	**0.0248**		**0.0231**	**0.0231**	**0.0000**	**53.9586**	**53.9586**	**0.0160**	**0.0000**	**54.2942**

3.41 Year 1 Month 4 - 2020

Unmitigated Construction Off-Site

	ROG	NOx	CO	SO2	Fugitive PM10	Exhaust PM10	PM10 Total	Fugitive PM2.5	Exhaust PM2.5	PM2.5 Total	Bio- CO2	NBio- CO2	Total CO2	CH4	N2O	CO2e
Category	tons/yr										MT/yr					
Hauling	0.0000	0.0000	0.0000	0.0000	0.0000	0.0000	0.0000	0.0000	0.0000	0.0000	0.0000	0.0000	0.0000	0.0000	0.0000	0.0000
Vendor	0.0000	0.0000	0.0000	0.0000	0.0000	0.0000	0.0000	0.0000	0.0000	0.0000	0.0000	0.0000	0.0000	0.0000	0.0000	0.0000
Worker	0.0000	0.0000	0.0000	0.0000	0.0000	0.0000	0.0000	0.0000	0.0000	0.0000	0.0000	0.0000	0.0000	0.0000	0.0000	0.0000
Total	**0.0000**	**0.0000**	**0.0000**	**0.0000**	**0.0000**	**0.0000**	**0.0000**	**0.0000**	**0.0000**	**0.0000**	**0.0000**	**0.0000**	**0.0000**	**0.0000**	**0.0000**	**0.0000**

Mitigated Construction On-Site

	ROG	NOx	CO	SO2	Fugitive PM10	Exhaust PM10	PM10 Total	Fugitive PM2.5	Exhaust PM2.5	PM2.5 Total	Bio- CO2	NBio- CO2	Total CO2	CH4	N2O	CO2e
Category	tons/yr										MT/yr					
Off-Road	8.3400e-003	0.0724	0.3477	6.3000e-004		9.8000e-004	9.8000e-004		9.8000e-004	9.8000e-004	0.0000	53.9585	53.9585	0.0160	0.0000	54.2941
Total	**8.3400e-003**	**0.0724**	**0.3477**	**6.3000e-004**		**9.8000e-004**	**9.8000e-004**		**9.8000e-004**	**9.8000e-004**	**0.0000**	**53.9585**	**53.9585**	**0.0160**	**0.0000**	**54.2941**

3.41 Year 1 Month 4 - 2020

Mitigated Construction Off-Site

	ROG	NOx	CO	SO2	Fugitive PM10	Exhaust PM10	PM10 Total	Fugitive PM2.5	Exhaust PM2.5	PM2.5 Total	Bio- CO2	NBio- CO2	Total CO2	CH4	N2O	CO2e
Category	tons/yr										MT/yr					
Hauling	0.0000	0.0000	0.0000	0.0000	0.0000	0.0000	0.0000	0.0000	0.0000	0.0000	0.0000	0.0000	0.0000	0.0000	0.0000	0.0000
Vendor	0.0000	0.0000	0.0000	0.0000	0.0000	0.0000	0.0000	0.0000	0.0000	0.0000	0.0000	0.0000	0.0000	0.0000	0.0000	0.0000
Worker	0.0000	0.0000	0.0000	0.0000	0.0000	0.0000	0.0000	0.0000	0.0000	0.0000	0.0000	0.0000	0.0000	0.0000	0.0000	0.0000
Total	**0.0000**	**0.0000**	**0.0000**	**0.0000**	**0.0000**	**0.0000**	**0.0000**	**0.0000**	**0.0000**	**0.0000**	**0.0000**	**0.0000**	**0.0000**	**0.0000**	**0.0000**	**0.0000**

3.42 Year 1 Month 5 - 2020

Unmitigated Construction On-Site

	ROG	NOx	CO	SO2	Fugitive PM10	Exhaust PM10	PM10 Total	Fugitive PM2.5	Exhaust PM2.5	PM2.5 Total	Bio- CO2	NBio- CO2	Total CO2	CH4	N2O	CO2e
Category	tons/yr										MT/yr					
Off-Road	0.0562	0.5415	0.3144	6.3000e-004		0.0248	0.0248		0.0231	0.0231	0.0000	53.9586	53.9586	0.0160	0.0000	54.2942
Total	**0.0562**	**0.5415**	**0.3144**	**6.3000e-004**		**0.0248**	**0.0248**		**0.0231**	**0.0231**	**0.0000**	**53.9586**	**53.9586**	**0.0160**	**0.0000**	**54.2942**

3.42 Year 1 Month 5 - 2020

Unmitigated Construction Off-Site

	ROG	NOx	CO	SO2	Fugitive PM10	Exhaust PM10	PM10 Total	Fugitive PM2.5	Exhaust PM2.5	PM2.5 Total	Bio- CO2	NBio- CO2	Total CO2	CH4	N2O	CO2e
Category	tons/yr										MT/yr					
Hauling	0.0000	0.0000	0.0000	0.0000	0.0000	0.0000	0.0000	0.0000	0.0000	0.0000	0.0000	0.0000	0.0000	0.0000	0.0000	0.0000
Vendor	0.0000	0.0000	0.0000	0.0000	0.0000	0.0000	0.0000	0.0000	0.0000	0.0000	0.0000	0.0000	0.0000	0.0000	0.0000	0.0000
Worker	0.0000	0.0000	0.0000	0.0000	0.0000	0.0000	0.0000	0.0000	0.0000	0.0000	0.0000	0.0000	0.0000	0.0000	0.0000	0.0000
Total	**0.0000**	**0.0000**	**0.0000**	**0.0000**	**0.0000**	**0.0000**	**0.0000**	**0.0000**	**0.0000**	**0.0000**	**0.0000**	**0.0000**	**0.0000**	**0.0000**	**0.0000**	**0.0000**

Mitigated Construction On-Site

	ROG	NOx	CO	SO2	Fugitive PM10	Exhaust PM10	PM10 Total	Fugitive PM2.5	Exhaust PM2.5	PM2.5 Total	Bio- CO2	NBio- CO2	Total CO2	CH4	N2O	CO2e
Category	tons/yr										MT/yr					
Off-Road	8.3400e-003	0.0724	0.3477	6.3000e-004		9.8000e-004	9.8000e-004		9.8000e-004	9.8000e-004	0.0000	53.9585	53.9585	0.0160	0.0000	54.2941
Total	**8.3400e-003**	**0.0724**	**0.3477**	**6.3000e-004**		**9.8000e-004**	**9.8000e-004**		**9.8000e-004**	**9.8000e-004**	**0.0000**	**53.9585**	**53.9585**	**0.0160**	**0.0000**	**54.2941**

3.42 Year 1 Month 5 - 2020

Mitigated Construction Off-Site

	ROG	NOx	CO	SO2	Fugitive PM10	Exhaust PM10	PM10 Total	Fugitive PM2.5	Exhaust PM2.5	PM2.5 Total	Bio- CO2	NBio- CO2	Total CO2	CH4	N2O	CO2e
Category	tons/yr										MT/yr					
Hauling	0.0000	0.0000	0.0000	0.0000	0.0000	0.0000	0.0000	0.0000	0.0000	0.0000	0.0000	0.0000	0.0000	0.0000	0.0000	0.0000
Vendor	0.0000	0.0000	0.0000	0.0000	0.0000	0.0000	0.0000	0.0000	0.0000	0.0000	0.0000	0.0000	0.0000	0.0000	0.0000	0.0000
Worker	0.0000	0.0000	0.0000	0.0000	0.0000	0.0000	0.0000	0.0000	0.0000	0.0000	0.0000	0.0000	0.0000	0.0000	0.0000	0.0000
Total	**0.0000**	**0.0000**	**0.0000**	**0.0000**	**0.0000**	**0.0000**	**0.0000**	**0.0000**	**0.0000**	**0.0000**	**0.0000**	**0.0000**	**0.0000**	**0.0000**	**0.0000**	**0.0000**

3.43 Year 1 Month 6 - 2020

Unmitigated Construction On-Site

	ROG	NOx	CO	SO2	Fugitive PM10	Exhaust PM10	PM10 Total	Fugitive PM2.5	Exhaust PM2.5	PM2.5 Total	Bio- CO2	NBio- CO2	Total CO2	CH4	N2O	CO2e
Category	tons/yr										MT/yr					
Off-Road	0.0439	0.4325	0.2546	5.0000e-004		0.0200	0.0200		0.0186	0.0186	0.0000	43.1067	43.1067	0.0130	0.0000	43.3789
Total	**0.0439**	**0.4325**	**0.2546**	**5.0000e-004**		**0.0200**	**0.0200**		**0.0186**	**0.0186**	**0.0000**	**43.1067**	**43.1067**	**0.0130**	**0.0000**	**43.3789**

3.43 Year 1 Month 6 - 2020

Unmitigated Construction Off-Site

	ROG	NOx	CO	SO2	Fugitive PM10	Exhaust PM10	PM10 Total	Fugitive PM2.5	Exhaust PM2.5	PM2.5 Total	Bio- CO2	NBio- CO2	Total CO2	CH4	N2O	CO2e
Category	tons/yr										MT/yr					
Hauling	0.0000	0.0000	0.0000	0.0000	0.0000	0.0000	0.0000	0.0000	0.0000	0.0000	0.0000	0.0000	0.0000	0.0000	0.0000	0.0000
Vendor	0.0000	0.0000	0.0000	0.0000	0.0000	0.0000	0.0000	0.0000	0.0000	0.0000	0.0000	0.0000	0.0000	0.0000	0.0000	0.0000
Worker	0.0000	0.0000	0.0000	0.0000	0.0000	0.0000	0.0000	0.0000	0.0000	0.0000	0.0000	0.0000	0.0000	0.0000	0.0000	0.0000
Total	**0.0000**	**0.0000**	**0.0000**	**0.0000**	**0.0000**	**0.0000**	**0.0000**	**0.0000**	**0.0000**	**0.0000**	**0.0000**	**0.0000**	**0.0000**	**0.0000**	**0.0000**	**0.0000**

Mitigated Construction On-Site

	ROG	NOx	CO	SO2	Fugitive PM10	Exhaust PM10	PM10 Total	Fugitive PM2.5	Exhaust PM2.5	PM2.5 Total	Bio- CO2	NBio- CO2	Total CO2	CH4	N2O	CO2e
Category	tons/yr										MT/yr					
Off-Road	6.5600e-003	0.0526	0.2842	5.0000e-004		7.9000e-004	7.9000e-004		7.9000e-004	7.9000e-004	0.0000	43.1067	43.1067	0.0130	0.0000	43.3789
Total	**6.5600e-003**	**0.0526**	**0.2842**	**5.0000e-004**		**7.9000e-004**	**7.9000e-004**		**7.9000e-004**	**7.9000e-004**	**0.0000**	**43.1067**	**43.1067**	**0.0130**	**0.0000**	**43.3789**

3.43 Year 1 Month 6 - 2020

Mitigated Construction Off-Site

	ROG	NOx	CO	SO2	Fugitive PM10	Exhaust PM10	PM10 Total	Fugitive PM2.5	Exhaust PM2.5	PM2.5 Total	Bio- CO2	NBio- CO2	Total CO2	CH4	N2O	CO2e
Category	tons/yr										MT/yr					
Hauling	0.0000	0.0000	0.0000	0.0000	0.0000	0.0000	0.0000	0.0000	0.0000	0.0000	0.0000	0.0000	0.0000	0.0000	0.0000	0.0000
Vendor	0.0000	0.0000	0.0000	0.0000	0.0000	0.0000	0.0000	0.0000	0.0000	0.0000	0.0000	0.0000	0.0000	0.0000	0.0000	0.0000
Worker	0.0000	0.0000	0.0000	0.0000	0.0000	0.0000	0.0000	0.0000	0.0000	0.0000	0.0000	0.0000	0.0000	0.0000	0.0000	0.0000
Total	**0.0000**	**0.0000**	**0.0000**	**0.0000**	**0.0000**	**0.0000**	**0.0000**	**0.0000**	**0.0000**	**0.0000**	**0.0000**	**0.0000**	**0.0000**	**0.0000**	**0.0000**	**0.0000**

3.44 Year 1 Month 7 - 2020

Unmitigated Construction On-Site

	ROG	NOx	CO	SO2	Fugitive PM10	Exhaust PM10	PM10 Total	Fugitive PM2.5	Exhaust PM2.5	PM2.5 Total	Bio- CO2	NBio- CO2	Total CO2	CH4	N2O	CO2e
Category	tons/yr										MT/yr					
Off-Road	0.1331	1.4963	0.7437	1.9200e-003		0.0616	0.0616		0.0569	0.0569	0.0000	167.4475	167.4475	0.0531	0.0000	168.5634
Total	**0.1331**	**1.4963**	**0.7437**	**1.9200e-003**		**0.0616**	**0.0616**		**0.0569**	**0.0569**	**0.0000**	**167.4475**	**167.4475**	**0.0531**	**0.0000**	**168.5634**

3.44 Year 1 Month 7 - 2020

Unmitigated Construction Off-Site

	ROG	NOx	CO	SO2	Fugitive PM10	Exhaust PM10	PM10 Total	Fugitive PM2.5	Exhaust PM2.5	PM2.5 Total	Bio- CO2	NBio- CO2	Total CO2	CH4	N2O	CO2e
Category	tons/yr										MT/yr					
Hauling	0.0000	0.0000	0.0000	0.0000	0.0000	0.0000	0.0000	0.0000	0.0000	0.0000	0.0000	0.0000	0.0000	0.0000	0.0000	0.0000
Vendor	0.0000	0.0000	0.0000	0.0000	0.0000	0.0000	0.0000	0.0000	0.0000	0.0000	0.0000	0.0000	0.0000	0.0000	0.0000	0.0000
Worker	0.0000	0.0000	0.0000	0.0000	0.0000	0.0000	0.0000	0.0000	0.0000	0.0000	0.0000	0.0000	0.0000	0.0000	0.0000	0.0000
Total	**0.0000**	**0.0000**	**0.0000**	**0.0000**	**0.0000**	**0.0000**	**0.0000**	**0.0000**	**0.0000**	**0.0000**	**0.0000**	**0.0000**	**0.0000**	**0.0000**	**0.0000**	**0.0000**

Mitigated Construction On-Site

	ROG	NOx	CO	SO2	Fugitive PM10	Exhaust PM10	PM10 Total	Fugitive PM2.5	Exhaust PM2.5	PM2.5 Total	Bio- CO2	NBio- CO2	Total CO2	CH4	N2O	CO2e
Category	tons/yr										MT/yr					
Off-Road	0.0240	0.1289	0.9729	1.9200e-003		3.1100e-003	3.1100e-003		3.1100e-003	3.1100e-003	0.0000	167.4473	167.4473	0.0531	0.0000	168.5632
Total	**0.0240**	**0.1289**	**0.9729**	**1.9200e-003**		**3.1100e-003**	**3.1100e-003**		**3.1100e-003**	**3.1100e-003**	**0.0000**	**167.4473**	**167.4473**	**0.0531**	**0.0000**	**168.5632**

3.44 Year 1 Month 7 - 2020

Mitigated Construction Off-Site

	ROG	NOx	CO	SO2	Fugitive PM10	Exhaust PM10	PM10 Total	Fugitive PM2.5	Exhaust PM2.5	PM2.5 Total	Bio- CO2	NBio- CO2	Total CO2	CH4	N2O	CO2e
Category	tons/yr										MT/yr					
Hauling	0.0000	0.0000	0.0000	0.0000	0.0000	0.0000	0.0000	0.0000	0.0000	0.0000	0.0000	0.0000	0.0000	0.0000	0.0000	0.0000
Vendor	0.0000	0.0000	0.0000	0.0000	0.0000	0.0000	0.0000	0.0000	0.0000	0.0000	0.0000	0.0000	0.0000	0.0000	0.0000	0.0000
Worker	0.0000	0.0000	0.0000	0.0000	0.0000	0.0000	0.0000	0.0000	0.0000	0.0000	0.0000	0.0000	0.0000	0.0000	0.0000	0.0000
Total	**0.0000**	**0.0000**	**0.0000**	**0.0000**	**0.0000**	**0.0000**	**0.0000**	**0.0000**	**0.0000**	**0.0000**	**0.0000**	**0.0000**	**0.0000**	**0.0000**	**0.0000**	**0.0000**

3.45 Year 1 Month 8 - 2020

Unmitigated Construction On-Site

	ROG	NOx	CO	SO2	Fugitive PM10	Exhaust PM10	PM10 Total	Fugitive PM2.5	Exhaust PM2.5	PM2.5 Total	Bio- CO2	NBio- CO2	Total CO2	CH4	N2O	CO2e
Category	tons/yr										MT/yr					
Off-Road	0.1282	1.4409	0.7162	1.8500e-003		0.0593	0.0593		0.0548	0.0548	0.0000	161.2457	161.2457	0.0512	0.0000	162.3203
Total	**0.1282**	**1.4409**	**0.7162**	**1.8500e-003**		**0.0593**	**0.0593**		**0.0548**	**0.0548**	**0.0000**	**161.2457**	**161.2457**	**0.0512**	**0.0000**	**162.3203**

3.45 Year 1 Month 8 - 2020

Unmitigated Construction Off-Site

	ROG	NOx	CO	SO2	Fugitive PM10	Exhaust PM10	PM10 Total	Fugitive PM2.5	Exhaust PM2.5	PM2.5 Total	Bio- CO2	NBio- CO2	Total CO2	CH4	N2O	CO2e
Category	tons/yr										MT/yr					
Hauling	0.0000	0.0000	0.0000	0.0000	0.0000	0.0000	0.0000	0.0000	0.0000	0.0000	0.0000	0.0000	0.0000	0.0000	0.0000	0.0000
Vendor	0.0000	0.0000	0.0000	0.0000	0.0000	0.0000	0.0000	0.0000	0.0000	0.0000	0.0000	0.0000	0.0000	0.0000	0.0000	0.0000
Worker	0.0000	0.0000	0.0000	0.0000	0.0000	0.0000	0.0000	0.0000	0.0000	0.0000	0.0000	0.0000	0.0000	0.0000	0.0000	0.0000
Total	**0.0000**	**0.0000**	**0.0000**	**0.0000**	**0.0000**	**0.0000**	**0.0000**	**0.0000**	**0.0000**	**0.0000**	**0.0000**	**0.0000**	**0.0000**	**0.0000**	**0.0000**	**0.0000**

Mitigated Construction On-Site

	ROG	NOx	CO	SO2	Fugitive PM10	Exhaust PM10	PM10 Total	Fugitive PM2.5	Exhaust PM2.5	PM2.5 Total	Bio- CO2	NBio- CO2	Total CO2	CH4	N2O	CO2e
Category	tons/yr										MT/yr					
Off-Road	0.0231	0.1242	0.9368	1.8500e-003		2.9900e-003	2.9900e-003		2.9900e-003	2.9900e-003	0.0000	161.2455	161.2455	0.0512	0.0000	162.3201
Total	**0.0231**	**0.1242**	**0.9368**	**1.8500e-003**		**2.9900e-003**	**2.9900e-003**		**2.9900e-003**	**2.9900e-003**	**0.0000**	**161.2455**	**161.2455**	**0.0512**	**0.0000**	**162.3201**

3.45 Year 1 Month 8 - 2020

Mitigated Construction Off-Site

	ROG	NOx	CO	SO2	Fugitive PM10	Exhaust PM10	PM10 Total	Fugitive PM2.5	Exhaust PM2.5	PM2.5 Total	Bio- CO2	NBio- CO2	Total CO2	CH4	N2O	CO2e
Category	tons/yr										MT/yr					
Hauling	0.0000	0.0000	0.0000	0.0000	0.0000	0.0000	0.0000	0.0000	0.0000	0.0000	0.0000	0.0000	0.0000	0.0000	0.0000	0.0000
Vendor	0.0000	0.0000	0.0000	0.0000	0.0000	0.0000	0.0000	0.0000	0.0000	0.0000	0.0000	0.0000	0.0000	0.0000	0.0000	0.0000
Worker	0.0000	0.0000	0.0000	0.0000	0.0000	0.0000	0.0000	0.0000	0.0000	0.0000	0.0000	0.0000	0.0000	0.0000	0.0000	0.0000
Total	**0.0000**	**0.0000**	**0.0000**	**0.0000**	**0.0000**	**0.0000**	**0.0000**	**0.0000**	**0.0000**	**0.0000**	**0.0000**	**0.0000**	**0.0000**	**0.0000**	**0.0000**	**0.0000**

3.46 Year 1 Month 9 - 2020

Unmitigated Construction On-Site

	ROG	NOx	CO	SO2	Fugitive PM10	Exhaust PM10	PM10 Total	Fugitive PM2.5	Exhaust PM2.5	PM2.5 Total	Bio- CO2	NBio- CO2	Total CO2	CH4	N2O	CO2e
Category	tons/yr										MT/yr					
Off-Road	0.0915	1.0941	0.4952	1.4400e-003		0.0429	0.0429		0.0395	0.0395	0.0000	126.1982	126.1982	0.0408	0.0000	127.0554
Total	**0.0915**	**1.0941**	**0.4952**	**1.4400e-003**		**0.0429**	**0.0429**		**0.0395**	**0.0395**	**0.0000**	**126.1982**	**126.1982**	**0.0408**	**0.0000**	**127.0554**

3.46 Year 1 Month 9 - 2020

Unmitigated Construction Off-Site

	ROG	NOx	CO	SO2	Fugitive PM10	Exhaust PM10	PM10 Total	Fugitive PM2.5	Exhaust PM2.5	PM2.5 Total	Bio- CO2	NBio- CO2	Total CO2	CH4	N2O	CO2e
Category	tons/yr										MT/yr					
Hauling	0.0000	0.0000	0.0000	0.0000	0.0000	0.0000	0.0000	0.0000	0.0000	0.0000	0.0000	0.0000	0.0000	0.0000	0.0000	0.0000
Vendor	0.0000	0.0000	0.0000	0.0000	0.0000	0.0000	0.0000	0.0000	0.0000	0.0000	0.0000	0.0000	0.0000	0.0000	0.0000	0.0000
Worker	0.0000	0.0000	0.0000	0.0000	0.0000	0.0000	0.0000	0.0000	0.0000	0.0000	0.0000	0.0000	0.0000	0.0000	0.0000	0.0000
Total	**0.0000**	**0.0000**	**0.0000**	**0.0000**	**0.0000**	**0.0000**	**0.0000**	**0.0000**	**0.0000**	**0.0000**	**0.0000**	**0.0000**	**0.0000**	**0.0000**	**0.0000**	**0.0000**

Mitigated Construction On-Site

	ROG	NOx	CO	SO2	Fugitive PM10	Exhaust PM10	PM10 Total	Fugitive PM2.5	Exhaust PM2.5	PM2.5 Total	Bio- CO2	NBio- CO2	Total CO2	CH4	N2O	CO2e
Category	tons/yr										MT/yr					
Off-Road	0.0177	0.0765	0.6940	1.4400e-003		2.3500e-003	2.3500e-003		2.3500e-003	2.3500e-003	0.0000	126.1981	126.1981	0.0408	0.0000	127.0552
Total	**0.0177**	**0.0765**	**0.6940**	**1.4400e-003**		**2.3500e-003**	**2.3500e-003**		**2.3500e-003**	**2.3500e-003**	**0.0000**	**126.1981**	**126.1981**	**0.0408**	**0.0000**	**127.0552**

3.46 Year 1 Month 9 - 2020

Mitigated Construction Off-Site

	ROG	NOx	CO	SO2	Fugitive PM10	Exhaust PM10	PM10 Total	Fugitive PM2.5	Exhaust PM2.5	PM2.5 Total	Bio- CO2	NBio- CO2	Total CO2	CH4	N2O	CO2e
Category	tons/yr										MT/yr					
Hauling	0.0000	0.0000	0.0000	0.0000	0.0000	0.0000	0.0000	0.0000	0.0000	0.0000	0.0000	0.0000	0.0000	0.0000	0.0000	0.0000
Vendor	0.0000	0.0000	0.0000	0.0000	0.0000	0.0000	0.0000	0.0000	0.0000	0.0000	0.0000	0.0000	0.0000	0.0000	0.0000	0.0000
Worker	0.0000	0.0000	0.0000	0.0000	0.0000	0.0000	0.0000	0.0000	0.0000	0.0000	0.0000	0.0000	0.0000	0.0000	0.0000	0.0000
Total	**0.0000**	**0.0000**	**0.0000**	**0.0000**	**0.0000**	**0.0000**	**0.0000**	**0.0000**	**0.0000**	**0.0000**	**0.0000**	**0.0000**	**0.0000**	**0.0000**	**0.0000**	**0.0000**

3.47 Year 1 Month 10 - 2020

Unmitigated Construction On-Site

	ROG	NOx	CO	SO2	Fugitive PM10	Exhaust PM10	PM10 Total	Fugitive PM2.5	Exhaust PM2.5	PM2.5 Total	Bio- CO2	NBio- CO2	Total CO2	CH4	N2O	CO2e
Category	tons/yr										MT/yr					
Off-Road	0.0950	1.1362	0.5143	1.4900e-003		0.0445	0.0445		0.0410	0.0410	0.0000	131.0520	131.0520	0.0424	0.0000	131.9421
Total	**0.0950**	**1.1362**	**0.5143**	**1.4900e-003**		**0.0445**	**0.0445**		**0.0410**	**0.0410**	**0.0000**	**131.0520**	**131.0520**	**0.0424**	**0.0000**	**131.9421**

3.47 Year 1 Month 10 - 2020

Unmitigated Construction Off-Site

	ROG	NOx	CO	SO2	Fugitive PM10	Exhaust PM10	PM10 Total	Fugitive PM2.5	Exhaust PM2.5	PM2.5 Total	Bio- CO2	NBio- CO2	Total CO2	CH4	N2O	CO2e
Category	tons/yr										MT/yr					
Hauling	0.0000	0.0000	0.0000	0.0000	0.0000	0.0000	0.0000	0.0000	0.0000	0.0000	0.0000	0.0000	0.0000	0.0000	0.0000	0.0000
Vendor	0.0000	0.0000	0.0000	0.0000	0.0000	0.0000	0.0000	0.0000	0.0000	0.0000	0.0000	0.0000	0.0000	0.0000	0.0000	0.0000
Worker	0.0000	0.0000	0.0000	0.0000	0.0000	0.0000	0.0000	0.0000	0.0000	0.0000	0.0000	0.0000	0.0000	0.0000	0.0000	0.0000
Total	**0.0000**	**0.0000**	**0.0000**	**0.0000**	**0.0000**	**0.0000**	**0.0000**	**0.0000**	**0.0000**	**0.0000**	**0.0000**	**0.0000**	**0.0000**	**0.0000**	**0.0000**	**0.0000**

Mitigated Construction On-Site

	ROG	NOx	CO	SO2	Fugitive PM10	Exhaust PM10	PM10 Total	Fugitive PM2.5	Exhaust PM2.5	PM2.5 Total	Bio- CO2	NBio- CO2	Total CO2	CH4	N2O	CO2e
Category	tons/yr										MT/yr					
Off-Road	0.0183	0.0794	0.7207	1.4900e-003		2.4400e-003	2.4400e-003		2.4400e-003	2.4400e-003	0.0000	131.0519	131.0519	0.0424	0.0000	131.9419
Total	**0.0183**	**0.0794**	**0.7207**	**1.4900e-003**		**2.4400e-003**	**2.4400e-003**		**2.4400e-003**	**2.4400e-003**	**0.0000**	**131.0519**	**131.0519**	**0.0424**	**0.0000**	**131.9419**

3.47 Year 1 Month 10 - 2020

Mitigated Construction Off-Site

	ROG	NOx	CO	SO2	Fugitive PM10	Exhaust PM10	PM10 Total	Fugitive PM2.5	Exhaust PM2.5	PM2.5 Total	Bio- CO2	NBio- CO2	Total CO2	CH4	N2O	CO2e
Category	tons/yr										MT/yr					
Hauling	0.0000	0.0000	0.0000	0.0000	0.0000	0.0000	0.0000	0.0000	0.0000	0.0000	0.0000	0.0000	0.0000	0.0000	0.0000	0.0000
Vendor	0.0000	0.0000	0.0000	0.0000	0.0000	0.0000	0.0000	0.0000	0.0000	0.0000	0.0000	0.0000	0.0000	0.0000	0.0000	0.0000
Worker	0.0000	0.0000	0.0000	0.0000	0.0000	0.0000	0.0000	0.0000	0.0000	0.0000	0.0000	0.0000	0.0000	0.0000	0.0000	0.0000
Total	**0.0000**	**0.0000**	**0.0000**	**0.0000**	**0.0000**	**0.0000**	**0.0000**	**0.0000**	**0.0000**	**0.0000**	**0.0000**	**0.0000**	**0.0000**	**0.0000**	**0.0000**	**0.0000**

3.48 Year 1 Month 11 - 2020

Unmitigated Construction Off-Site

	ROG	NOx	CO	SO2	Fugitive PM10	Exhaust PM10	PM10 Total	Fugitive PM2.5	Exhaust PM2.5	PM2.5 Total	Bio- CO2	NBio- CO2	Total CO2	CH4	N2O	CO2e
Category	tons/yr										MT/yr					
Hauling					0.0000	0.0000	0.0000	0.0000	0.0000	0.0000	0.0000	0.0000	0.0000	0.0000	0.0000	0.0000
Vendor					0.0000	0.0000	0.0000	0.0000	0.0000	0.0000	0.0000	0.0000	0.0000	0.0000	0.0000	0.0000
Worker					0.0000	0.0000	0.0000	0.0000	0.0000	0.0000	0.0000	0.0000	0.0000	0.0000	0.0000	0.0000
Total					**0.0000**	**0.0000**	**0.0000**	**0.0000**	**0.0000**	**0.0000**	**0.0000**	**0.0000**	**0.0000**	**0.0000**	**0.0000**	**0.0000**

3.48 Year 1 Month 11 - 2020

Mitigated Construction Off-Site

	ROG	NOx	CO	SO2	Fugitive PM10	Exhaust PM10	PM10 Total	Fugitive PM2.5	Exhaust PM2.5	PM2.5 Total	Bio- CO2	NBio- CO2	Total CO2	CH4	N2O	CO2e
Category	tons/yr										MT/yr					
Hauling					0.0000	0.0000	0.0000	0.0000	0.0000	0.0000	0.0000	0.0000	0.0000	0.0000	0.0000	0.0000
Vendor					0.0000	0.0000	0.0000	0.0000	0.0000	0.0000	0.0000	0.0000	0.0000	0.0000	0.0000	0.0000
Worker					0.0000	0.0000	0.0000	0.0000	0.0000	0.0000	0.0000	0.0000	0.0000	0.0000	0.0000	0.0000
Total					**0.0000**	**0.0000**	**0.0000**	**0.0000**	**0.0000**	**0.0000**	**0.0000**	**0.0000**	**0.0000**	**0.0000**	**0.0000**	**0.0000**

3.49 Year 1 Month 12 - 2020

Unmitigated Construction Off-Site

	ROG	NOx	CO	SO2	Fugitive PM10	Exhaust PM10	PM10 Total	Fugitive PM2.5	Exhaust PM2.5	PM2.5 Total	Bio- CO2	NBio- CO2	Total CO2	CH4	N2O	CO2e
Category	tons/yr										MT/yr					
Hauling					0.0000	0.0000	0.0000	0.0000	0.0000	0.0000	0.0000	0.0000	0.0000	0.0000	0.0000	0.0000
Vendor					0.0000	0.0000	0.0000	0.0000	0.0000	0.0000	0.0000	0.0000	0.0000	0.0000	0.0000	0.0000
Worker					0.0000	0.0000	0.0000	0.0000	0.0000	0.0000	0.0000	0.0000	0.0000	0.0000	0.0000	0.0000
Total					**0.0000**	**0.0000**	**0.0000**	**0.0000**	**0.0000**	**0.0000**	**0.0000**	**0.0000**	**0.0000**	**0.0000**	**0.0000**	**0.0000**

3.49 Year 1 Month 12 - 2020

Mitigated Construction Off-Site

	ROG	NOx	CO	SO2	Fugitive PM10	Exhaust PM10	PM10 Total	Fugitive PM2.5	Exhaust PM2.5	PM2.5 Total	Bio- CO2	NBio- CO2	Total CO2	CH4	N2O	CO2e
Category	tons/yr										MT/yr					
Hauling					0.0000	0.0000	0.0000	0.0000	0.0000	0.0000	0.0000	0.0000	0.0000	0.0000	0.0000	0.0000
Vendor					0.0000	0.0000	0.0000	0.0000	0.0000	0.0000	0.0000	0.0000	0.0000	0.0000	0.0000	0.0000
Worker					0.0000	0.0000	0.0000	0.0000	0.0000	0.0000	0.0000	0.0000	0.0000	0.0000	0.0000	0.0000
Total					**0.0000**	**0.0000**	**0.0000**	**0.0000**	**0.0000**	**0.0000**	**0.0000**	**0.0000**	**0.0000**	**0.0000**	**0.0000**	**0.0000**

3.50 Year 2 Month 1 - 2021

Unmitigated Construction On-Site

	ROG	NOx	CO	SO2	Fugitive PM10	Exhaust PM10	PM10 Total	Fugitive PM2.5	Exhaust PM2.5	PM2.5 Total	Bio- CO2	NBio- CO2	Total CO2	CH4	N2O	CO2e
Category	tons/yr										MT/yr					
Off-Road	0.0228	0.2505	0.1738	3.3000e-004		0.0116	0.0116		0.0106	0.0106	0.0000	29.0541	29.0541	9.4000e-003	0.0000	29.2514
Total	**0.0228**	**0.2505**	**0.1738**	**3.3000e-004**		**0.0116**	**0.0116**		**0.0106**	**0.0106**	**0.0000**	**29.0541**	**29.0541**	**9.4000e-003**	**0.0000**	**29.2514**

3.50 Year 2 Month 1 - 2021

Unmitigated Construction Off-Site

	ROG	NOx	CO	SO2	Fugitive PM10	Exhaust PM10	PM10 Total	Fugitive PM2.5	Exhaust PM2.5	PM2.5 Total	Bio- CO2	NBio- CO2	Total CO2	CH4	N2O	CO2e
Category	tons/yr										MT/yr					
Hauling	0.0000	0.0000	0.0000	0.0000	0.0000	0.0000	0.0000	0.0000	0.0000	0.0000	0.0000	0.0000	0.0000	0.0000	0.0000	0.0000
Vendor	0.0000	0.0000	0.0000	0.0000	0.0000	0.0000	0.0000	0.0000	0.0000	0.0000	0.0000	0.0000	0.0000	0.0000	0.0000	0.0000
Worker	0.0000	0.0000	0.0000	0.0000	0.0000	0.0000	0.0000	0.0000	0.0000	0.0000	0.0000	0.0000	0.0000	0.0000	0.0000	0.0000
Total	**0.0000**	**0.0000**	**0.0000**	**0.0000**	**0.0000**	**0.0000**	**0.0000**	**0.0000**	**0.0000**	**0.0000**	**0.0000**	**0.0000**	**0.0000**	**0.0000**	**0.0000**	**0.0000**

Mitigated Construction On-Site

	ROG	NOx	CO	SO2	Fugitive PM10	Exhaust PM10	PM10 Total	Fugitive PM2.5	Exhaust PM2.5	PM2.5 Total	Bio- CO2	NBio- CO2	Total CO2	CH4	N2O	CO2e
Category	tons/yr										MT/yr					
Off-Road	4.5000e-003	0.0353	0.2082	3.3000e-004		5.4000e-004	5.4000e-004		5.4000e-004	5.4000e-004	0.0000	29.0541	29.0541	9.4000e-003	0.0000	29.2514
Total	**4.5000e-003**	**0.0353**	**0.2082**	**3.3000e-004**		**5.4000e-004**	**5.4000e-004**		**5.4000e-004**	**5.4000e-004**	**0.0000**	**29.0541**	**29.0541**	**9.4000e-003**	**0.0000**	**29.2514**

3.50 Year 2 Month 1 - 2021

Mitigated Construction Off-Site

	ROG	NOx	CO	SO2	Fugitive PM10	Exhaust PM10	PM10 Total	Fugitive PM2.5	Exhaust PM2.5	PM2.5 Total	Bio- CO2	NBio- CO2	Total CO2	CH4	N2O	CO2e
Category	tons/yr										MT/yr					
Hauling	0.0000	0.0000	0.0000	0.0000	0.0000	0.0000	0.0000	0.0000	0.0000	0.0000	0.0000	0.0000	0.0000	0.0000	0.0000	0.0000
Vendor	0.0000	0.0000	0.0000	0.0000	0.0000	0.0000	0.0000	0.0000	0.0000	0.0000	0.0000	0.0000	0.0000	0.0000	0.0000	0.0000
Worker	0.0000	0.0000	0.0000	0.0000	0.0000	0.0000	0.0000	0.0000	0.0000	0.0000	0.0000	0.0000	0.0000	0.0000	0.0000	0.0000
Total	**0.0000**	**0.0000**	**0.0000**	**0.0000**	**0.0000**	**0.0000**	**0.0000**	**0.0000**	**0.0000**	**0.0000**	**0.0000**	**0.0000**	**0.0000**	**0.0000**	**0.0000**	**0.0000**

3.51 Year 2 Month 2 - 2021

Unmitigated Construction On-Site

	ROG	NOx	CO	SO2	Fugitive PM10	Exhaust PM10	PM10 Total	Fugitive PM2.5	Exhaust PM2.5	PM2.5 Total	Bio- CO2	NBio- CO2	Total CO2	CH4	N2O	CO2e
Category	tons/yr										MT/yr					
Off-Road	0.0612	0.6061	0.4103	8.0000e-004		0.0276	0.0276		0.0256	0.0256	0.0000	69.1800	69.1800	0.0209	0.0000	69.6185
Total	**0.0612**	**0.6061**	**0.4103**	**8.0000e-004**		**0.0276**	**0.0276**		**0.0256**	**0.0256**	**0.0000**	**69.1800**	**69.1800**	**0.0209**	**0.0000**	**69.6185**

3.51 Year 2 Month 2 - 2021

Unmitigated Construction Off-Site

	ROG	NOx	CO	SO2	Fugitive PM10	Exhaust PM10	PM10 Total	Fugitive PM2.5	Exhaust PM2.5	PM2.5 Total	Bio- CO2	NBio- CO2	Total CO2	CH4	N2O	CO2e
Category	tons/yr										MT/yr					
Hauling	0.0000	0.0000	0.0000	0.0000	0.0000	0.0000	0.0000	0.0000	0.0000	0.0000	0.0000	0.0000	0.0000	0.0000	0.0000	0.0000
Vendor	0.0000	0.0000	0.0000	0.0000	0.0000	0.0000	0.0000	0.0000	0.0000	0.0000	0.0000	0.0000	0.0000	0.0000	0.0000	0.0000
Worker	0.0000	0.0000	0.0000	0.0000	0.0000	0.0000	0.0000	0.0000	0.0000	0.0000	0.0000	0.0000	0.0000	0.0000	0.0000	0.0000
Total	**0.0000**	**0.0000**	**0.0000**	**0.0000**	**0.0000**	**0.0000**	**0.0000**	**0.0000**	**0.0000**	**0.0000**	**0.0000**	**0.0000**	**0.0000**	**0.0000**	**0.0000**	**0.0000**

Mitigated Construction On-Site

	ROG	NOx	CO	SO2	Fugitive PM10	Exhaust PM10	PM10 Total	Fugitive PM2.5	Exhaust PM2.5	PM2.5 Total	Bio- CO2	NBio- CO2	Total CO2	CH4	N2O	CO2e
Category	tons/yr										MT/yr					
Off-Road	0.0108	0.0948	0.4750	8.0000e-004		1.2700e-003	1.2700e-003		1.2700e-003	1.2700e-003	0.0000	69.1799	69.1799	0.0209	0.0000	69.6184
Total	**0.0108**	**0.0948**	**0.4750**	**8.0000e-004**		**1.2700e-003**	**1.2700e-003**		**1.2700e-003**	**1.2700e-003**	**0.0000**	**69.1799**	**69.1799**	**0.0209**	**0.0000**	**69.6184**

3.51 Year 2 Month 2 - 2021

Mitigated Construction Off-Site

	ROG	NOx	CO	SO2	Fugitive PM10	Exhaust PM10	PM10 Total	Fugitive PM2.5	Exhaust PM2.5	PM2.5 Total	Bio- CO2	NBio- CO2	Total CO2	CH4	N2O	CO2e
Category	tons/yr										MT/yr					
Hauling	0.0000	0.0000	0.0000	0.0000	0.0000	0.0000	0.0000	0.0000	0.0000	0.0000	0.0000	0.0000	0.0000	0.0000	0.0000	0.0000
Vendor	0.0000	0.0000	0.0000	0.0000	0.0000	0.0000	0.0000	0.0000	0.0000	0.0000	0.0000	0.0000	0.0000	0.0000	0.0000	0.0000
Worker	0.0000	0.0000	0.0000	0.0000	0.0000	0.0000	0.0000	0.0000	0.0000	0.0000	0.0000	0.0000	0.0000	0.0000	0.0000	0.0000
Total	**0.0000**	**0.0000**	**0.0000**	**0.0000**	**0.0000**	**0.0000**	**0.0000**	**0.0000**	**0.0000**	**0.0000**	**0.0000**	**0.0000**	**0.0000**	**0.0000**	**0.0000**	**0.0000**

3.52 Year 2 Month 3 - 2021

Unmitigated Construction On-Site

	ROG	NOx	CO	SO2	Fugitive PM10	Exhaust PM10	PM10 Total	Fugitive PM2.5	Exhaust PM2.5	PM2.5 Total	Bio- CO2	NBio- CO2	Total CO2	CH4	N2O	CO2e
Category	tons/yr										MT/yr					
Off-Road	0.0688	0.6818	0.4616	9.0000e-004		0.0310	0.0310		0.0288	0.0288	0.0000	77.8275	77.8275	0.0235	0.0000	78.3208
Total	**0.0688**	**0.6818**	**0.4616**	**9.0000e-004**		**0.0310**	**0.0310**		**0.0288**	**0.0288**	**0.0000**	**77.8275**	**77.8275**	**0.0235**	**0.0000**	**78.3208**

3.52 Year 2 Month 3 - 2021

Unmitigated Construction Off-Site

	ROG	NOx	CO	SO2	Fugitive PM10	Exhaust PM10	PM10 Total	Fugitive PM2.5	Exhaust PM2.5	PM2.5 Total	Bio- CO2	NBio- CO2	Total CO2	CH4	N2O	CO2e
Category	tons/yr										MT/yr					
Hauling	0.0000	0.0000	0.0000	0.0000	0.0000	0.0000	0.0000	0.0000	0.0000	0.0000	0.0000	0.0000	0.0000	0.0000	0.0000	0.0000
Vendor	0.0000	0.0000	0.0000	0.0000	0.0000	0.0000	0.0000	0.0000	0.0000	0.0000	0.0000	0.0000	0.0000	0.0000	0.0000	0.0000
Worker	0.0000	0.0000	0.0000	0.0000	0.0000	0.0000	0.0000	0.0000	0.0000	0.0000	0.0000	0.0000	0.0000	0.0000	0.0000	0.0000
Total	**0.0000**	**0.0000**	**0.0000**	**0.0000**	**0.0000**	**0.0000**	**0.0000**	**0.0000**	**0.0000**	**0.0000**	**0.0000**	**0.0000**	**0.0000**	**0.0000**	**0.0000**	**0.0000**

Mitigated Construction On-Site

	ROG	NOx	CO	SO2	Fugitive PM10	Exhaust PM10	PM10 Total	Fugitive PM2.5	Exhaust PM2.5	PM2.5 Total	Bio- CO2	NBio- CO2	Total CO2	CH4	N2O	CO2e
Category	tons/yr										MT/yr					
Off-Road	0.0122	0.1067	0.5344	9.0000e-004		1.4300e-003	1.4300e-003		1.4300e-003	1.4300e-003	0.0000	77.8274	77.8274	0.0235	0.0000	78.3207
Total	**0.0122**	**0.1067**	**0.5344**	**9.0000e-004**		**1.4300e-003**	**1.4300e-003**		**1.4300e-003**	**1.4300e-003**	**0.0000**	**77.8274**	**77.8274**	**0.0235**	**0.0000**	**78.3207**

3.52 Year 2 Month 3 - 2021

Mitigated Construction Off-Site

	ROG	NOx	CO	SO2	Fugitive PM10	Exhaust PM10	PM10 Total	Fugitive PM2.5	Exhaust PM2.5	PM2.5 Total	Bio- CO2	NBio- CO2	Total CO2	CH4	N2O	CO2e
Category	tons/yr										MT/yr					
Hauling	0.0000	0.0000	0.0000	0.0000	0.0000	0.0000	0.0000	0.0000	0.0000	0.0000	0.0000	0.0000	0.0000	0.0000	0.0000	0.0000
Vendor	0.0000	0.0000	0.0000	0.0000	0.0000	0.0000	0.0000	0.0000	0.0000	0.0000	0.0000	0.0000	0.0000	0.0000	0.0000	0.0000
Worker	0.0000	0.0000	0.0000	0.0000	0.0000	0.0000	0.0000	0.0000	0.0000	0.0000	0.0000	0.0000	0.0000	0.0000	0.0000	0.0000
Total	**0.0000**	**0.0000**	**0.0000**	**0.0000**	**0.0000**	**0.0000**	**0.0000**	**0.0000**	**0.0000**	**0.0000**	**0.0000**	**0.0000**	**0.0000**	**0.0000**	**0.0000**	**0.0000**

3.53 Year 2 Month 4 - 2021

Unmitigated Construction On-Site

	ROG	NOx	CO	SO2	Fugitive PM10	Exhaust PM10	PM10 Total	Fugitive PM2.5	Exhaust PM2.5	PM2.5 Total	Bio- CO2	NBio- CO2	Total CO2	CH4	N2O	CO2e
Category	tons/yr										MT/yr					
Off-Road	0.0728	0.7337	0.4761	9.6000e-004		0.0330	0.0330		0.0306	0.0306	0.0000	83.0035	83.0035	0.0252	0.0000	83.5333
Total	**0.0728**	**0.7337**	**0.4761**	**9.6000e-004**		**0.0330**	**0.0330**		**0.0306**	**0.0306**	**0.0000**	**83.0035**	**83.0035**	**0.0252**	**0.0000**	**83.5333**

3.53 Year 2 Month 4 - 2021

Unmitigated Construction Off-Site

	ROG	NOx	CO	SO2	Fugitive PM10	Exhaust PM10	PM10 Total	Fugitive PM2.5	Exhaust PM2.5	PM2.5 Total	Bio- CO2	NBio- CO2	Total CO2	CH4	N2O	CO2e
Category	tons/yr										MT/yr					
Hauling	0.0000	0.0000	0.0000	0.0000	0.0000	0.0000	0.0000	0.0000	0.0000	0.0000	0.0000	0.0000	0.0000	0.0000	0.0000	0.0000
Vendor	0.0000	0.0000	0.0000	0.0000	0.0000	0.0000	0.0000	0.0000	0.0000	0.0000	0.0000	0.0000	0.0000	0.0000	0.0000	0.0000
Worker	0.0000	0.0000	0.0000	0.0000	0.0000	0.0000	0.0000	0.0000	0.0000	0.0000	0.0000	0.0000	0.0000	0.0000	0.0000	0.0000
Total	**0.0000**	**0.0000**	**0.0000**	**0.0000**	**0.0000**	**0.0000**	**0.0000**	**0.0000**	**0.0000**	**0.0000**	**0.0000**	**0.0000**	**0.0000**	**0.0000**	**0.0000**	**0.0000**

Mitigated Construction On-Site

	ROG	NOx	CO	SO2	Fugitive PM10	Exhaust PM10	PM10 Total	Fugitive PM2.5	Exhaust PM2.5	PM2.5 Total	Bio- CO2	NBio- CO2	Total CO2	CH4	N2O	CO2e
Category	tons/yr										MT/yr					
Off-Road	0.0128	0.1076	0.5559	9.6000e-004		1.5200e-003	1.5200e-003		1.5200e-003	1.5200e-003	0.0000	83.0034	83.0034	0.0252	0.0000	83.5332
Total	**0.0128**	**0.1076**	**0.5559**	**9.6000e-004**		**1.5200e-003**	**1.5200e-003**		**1.5200e-003**	**1.5200e-003**	**0.0000**	**83.0034**	**83.0034**	**0.0252**	**0.0000**	**83.5332**

3.53 Year 2 Month 4 - 2021

Mitigated Construction Off-Site

	ROG	NOx	CO	SO2	Fugitive PM10	Exhaust PM10	PM10 Total	Fugitive PM2.5	Exhaust PM2.5	PM2.5 Total	Bio- CO2	NBio- CO2	Total CO2	CH4	N2O	CO2e
Category	tons/yr										MT/yr					
Hauling	0.0000	0.0000	0.0000	0.0000	0.0000	0.0000	0.0000	0.0000	0.0000	0.0000	0.0000	0.0000	0.0000	0.0000	0.0000	0.0000
Vendor	0.0000	0.0000	0.0000	0.0000	0.0000	0.0000	0.0000	0.0000	0.0000	0.0000	0.0000	0.0000	0.0000	0.0000	0.0000	0.0000
Worker	0.0000	0.0000	0.0000	0.0000	0.0000	0.0000	0.0000	0.0000	0.0000	0.0000	0.0000	0.0000	0.0000	0.0000	0.0000	0.0000
Total	**0.0000**	**0.0000**	**0.0000**	**0.0000**	**0.0000**	**0.0000**	**0.0000**	**0.0000**	**0.0000**	**0.0000**	**0.0000**	**0.0000**	**0.0000**	**0.0000**	**0.0000**	**0.0000**

3.54 Year 2 Month 5 - 2021

Unmitigated Construction On-Site

	ROG	NOx	CO	SO2	Fugitive PM10	Exhaust PM10	PM10 Total	Fugitive PM2.5	Exhaust PM2.5	PM2.5 Total	Bio- CO2	NBio- CO2	Total CO2	CH4	N2O	CO2e
Category	tons/yr										MT/yr					
Off-Road	0.0390	0.3837	0.2452	5.0000e-004		0.0172	0.0172		0.0160	0.0160	0.0000	43.0983	43.0983	0.0129	0.0000	43.3684
Total	**0.0390**	**0.3837**	**0.2452**	**5.0000e-004**		**0.0172**	**0.0172**		**0.0160**	**0.0160**	**0.0000**	**43.0983**	**43.0983**	**0.0129**	**0.0000**	**43.3684**

3.54 Year 2 Month 5 - 2021

Unmitigated Construction Off-Site

	ROG	NOx	CO	SO2	Fugitive PM10	Exhaust PM10	PM10 Total	Fugitive PM2.5	Exhaust PM2.5	PM2.5 Total	Bio- CO2	NBio- CO2	Total CO2	CH4	N2O	CO2e
Category	tons/yr										MT/yr					
Hauling	0.0000	0.0000	0.0000	0.0000	0.0000	0.0000	0.0000	0.0000	0.0000	0.0000	0.0000	0.0000	0.0000	0.0000	0.0000	0.0000
Vendor	0.0000	0.0000	0.0000	0.0000	0.0000	0.0000	0.0000	0.0000	0.0000	0.0000	0.0000	0.0000	0.0000	0.0000	0.0000	0.0000
Worker	0.0000	0.0000	0.0000	0.0000	0.0000	0.0000	0.0000	0.0000	0.0000	0.0000	0.0000	0.0000	0.0000	0.0000	0.0000	0.0000
Total	**0.0000**	**0.0000**	**0.0000**	**0.0000**	**0.0000**	**0.0000**	**0.0000**	**0.0000**	**0.0000**	**0.0000**	**0.0000**	**0.0000**	**0.0000**	**0.0000**	**0.0000**	**0.0000**

Mitigated Construction On-Site

	ROG	NOx	CO	SO2	Fugitive PM10	Exhaust PM10	PM10 Total	Fugitive PM2.5	Exhaust PM2.5	PM2.5 Total	Bio- CO2	NBio- CO2	Total CO2	CH4	N2O	CO2e
Category	tons/yr										MT/yr					
Off-Road	6.5600e-003	0.0526	0.2842	5.0000e-004		7.9000e-004	7.9000e-004		7.9000e-004	7.9000e-004	0.0000	43.0982	43.0982	0.0129	0.0000	43.3683
Total	**6.5600e-003**	**0.0526**	**0.2842**	**5.0000e-004**		**7.9000e-004**	**7.9000e-004**		**7.9000e-004**	**7.9000e-004**	**0.0000**	**43.0982**	**43.0982**	**0.0129**	**0.0000**	**43.3683**

3.54 Year 2 Month 5 - 2021

Mitigated Construction Off-Site

	ROG	NOx	CO	SO2	Fugitive PM10	Exhaust PM10	PM10 Total	Fugitive PM2.5	Exhaust PM2.5	PM2.5 Total	Bio- CO2	NBio- CO2	Total CO2	CH4	N2O	CO2e
Category	tons/yr										MT/yr					
Hauling	0.0000	0.0000	0.0000	0.0000	0.0000	0.0000	0.0000	0.0000	0.0000	0.0000	0.0000	0.0000	0.0000	0.0000	0.0000	0.0000
Vendor	0.0000	0.0000	0.0000	0.0000	0.0000	0.0000	0.0000	0.0000	0.0000	0.0000	0.0000	0.0000	0.0000	0.0000	0.0000	0.0000
Worker	0.0000	0.0000	0.0000	0.0000	0.0000	0.0000	0.0000	0.0000	0.0000	0.0000	0.0000	0.0000	0.0000	0.0000	0.0000	0.0000
Total	**0.0000**	**0.0000**	**0.0000**	**0.0000**	**0.0000**	**0.0000**	**0.0000**	**0.0000**	**0.0000**	**0.0000**	**0.0000**	**0.0000**	**0.0000**	**0.0000**	**0.0000**	**0.0000**

3.55 Year 2 Month 6 - 2021

Unmitigated Construction On-Site

	ROG	NOx	CO	SO2	Fugitive PM10	Exhaust PM10	PM10 Total	Fugitive PM2.5	Exhaust PM2.5	PM2.5 Total	Bio- CO2	NBio- CO2	Total CO2	CH4	N2O	CO2e
Category	tons/yr										MT/yr					
Off-Road	0.0390	0.3837	0.2452	5.0000e-004		0.0172	0.0172		0.0160	0.0160	0.0000	43.0983	43.0983	0.0129	0.0000	43.3684
Total	**0.0390**	**0.3837**	**0.2452**	**5.0000e-004**		**0.0172**	**0.0172**		**0.0160**	**0.0160**	**0.0000**	**43.0983**	**43.0983**	**0.0129**	**0.0000**	**43.3684**

3.55 Year 2 Month 6 - 2021

Unmitigated Construction Off-Site

	ROG	NOx	CO	SO2	Fugitive PM10	Exhaust PM10	PM10 Total	Fugitive PM2.5	Exhaust PM2.5	PM2.5 Total	Bio- CO2	NBio- CO2	Total CO2	CH4	N2O	CO2e
Category	tons/yr										MT/yr					
Hauling	0.0000	0.0000	0.0000	0.0000	0.0000	0.0000	0.0000	0.0000	0.0000	0.0000	0.0000	0.0000	0.0000	0.0000	0.0000	0.0000
Vendor	0.0000	0.0000	0.0000	0.0000	0.0000	0.0000	0.0000	0.0000	0.0000	0.0000	0.0000	0.0000	0.0000	0.0000	0.0000	0.0000
Worker	0.0000	0.0000	0.0000	0.0000	0.0000	0.0000	0.0000	0.0000	0.0000	0.0000	0.0000	0.0000	0.0000	0.0000	0.0000	0.0000
Total	**0.0000**	**0.0000**	**0.0000**	**0.0000**	**0.0000**	**0.0000**	**0.0000**	**0.0000**	**0.0000**	**0.0000**	**0.0000**	**0.0000**	**0.0000**	**0.0000**	**0.0000**	**0.0000**

Mitigated Construction On-Site

	ROG	NOx	CO	SO2	Fugitive PM10	Exhaust PM10	PM10 Total	Fugitive PM2.5	Exhaust PM2.5	PM2.5 Total	Bio- CO2	NBio- CO2	Total CO2	CH4	N2O	CO2e
Category	tons/yr										MT/yr					
Off-Road	6.5600e-003	0.0526	0.2842	5.0000e-004		7.9000e-004	7.9000e-004		7.9000e-004	7.9000e-004	0.0000	43.0982	43.0982	0.0129	0.0000	43.3683
Total	**6.5600e-003**	**0.0526**	**0.2842**	**5.0000e-004**		**7.9000e-004**	**7.9000e-004**		**7.9000e-004**	**7.9000e-004**	**0.0000**	**43.0982**	**43.0982**	**0.0129**	**0.0000**	**43.3683**

3.55 Year 2 Month 6 - 2021

Mitigated Construction Off-Site

	ROG	NOx	CO	SO2	Fugitive PM10	Exhaust PM10	PM10 Total	Fugitive PM2.5	Exhaust PM2.5	PM2.5 Total	Bio- CO2	NBio- CO2	Total CO2	CH4	N2O	CO2e
Category	tons/yr										MT/yr					
Hauling	0.0000	0.0000	0.0000	0.0000	0.0000	0.0000	0.0000	0.0000	0.0000	0.0000	0.0000	0.0000	0.0000	0.0000	0.0000	0.0000
Vendor	0.0000	0.0000	0.0000	0.0000	0.0000	0.0000	0.0000	0.0000	0.0000	0.0000	0.0000	0.0000	0.0000	0.0000	0.0000	0.0000
Worker	0.0000	0.0000	0.0000	0.0000	0.0000	0.0000	0.0000	0.0000	0.0000	0.0000	0.0000	0.0000	0.0000	0.0000	0.0000	0.0000
Total	**0.0000**	**0.0000**	**0.0000**	**0.0000**	**0.0000**	**0.0000**	**0.0000**	**0.0000**	**0.0000**	**0.0000**	**0.0000**	**0.0000**	**0.0000**	**0.0000**	**0.0000**	**0.0000**

3.56 Year 2 Month 7 - 2021

Unmitigated Construction On-Site

	ROG	NOx	CO	SO2	Fugitive PM10	Exhaust PM10	PM10 Total	Fugitive PM2.5	Exhaust PM2.5	PM2.5 Total	Bio- CO2	NBio- CO2	Total CO2	CH4	N2O	CO2e
Category	tons/yr										MT/yr					
Off-Road	0.0337	0.3184	0.2219	4.3000e-004		0.0146	0.0146		0.0136	0.0136	0.0000	36.3875	36.3875	0.0107	0.0000	36.6111
Total	**0.0337**	**0.3184**	**0.2219**	**4.3000e-004**		**0.0146**	**0.0146**		**0.0136**	**0.0136**	**0.0000**	**36.3875**	**36.3875**	**0.0107**	**0.0000**	**36.6111**

3.56 Year 2 Month 7 - 2021

Unmitigated Construction Off-Site

	ROG	NOx	CO	SO2	Fugitive PM10	Exhaust PM10	PM10 Total	Fugitive PM2.5	Exhaust PM2.5	PM2.5 Total	Bio- CO2	NBio- CO2	Total CO2	CH4	N2O	CO2e
Category	tons/yr										MT/yr					
Hauling	0.0000	0.0000	0.0000	0.0000	0.0000	0.0000	0.0000	0.0000	0.0000	0.0000	0.0000	0.0000	0.0000	0.0000	0.0000	0.0000
Vendor	0.0000	0.0000	0.0000	0.0000	0.0000	0.0000	0.0000	0.0000	0.0000	0.0000	0.0000	0.0000	0.0000	0.0000	0.0000	0.0000
Worker	0.0000	0.0000	0.0000	0.0000	0.0000	0.0000	0.0000	0.0000	0.0000	0.0000	0.0000	0.0000	0.0000	0.0000	0.0000	0.0000
Total	**0.0000**	**0.0000**	**0.0000**	**0.0000**	**0.0000**	**0.0000**	**0.0000**	**0.0000**	**0.0000**	**0.0000**	**0.0000**	**0.0000**	**0.0000**	**0.0000**	**0.0000**	**0.0000**

Mitigated Construction On-Site

	ROG	NOx	CO	SO2	Fugitive PM10	Exhaust PM10	PM10 Total	Fugitive PM2.5	Exhaust PM2.5	PM2.5 Total	Bio- CO2	NBio- CO2	Total CO2	CH4	N2O	CO2e
Category	tons/yr										MT/yr					
Off-Road	5.6400e-003	0.0495	0.2522	4.3000e-004		6.6000e-004	6.6000e-004		6.6000e-004	6.6000e-004	0.0000	36.3874	36.3874	0.0107	0.0000	36.6110
Total	**5.6400e-003**	**0.0495**	**0.2522**	**4.3000e-004**		**6.6000e-004**	**6.6000e-004**		**6.6000e-004**	**6.6000e-004**	**0.0000**	**36.3874**	**36.3874**	**0.0107**	**0.0000**	**36.6110**

3.56 Year 2 Month 7 - 2021

Mitigated Construction Off-Site

	ROG	NOx	CO	SO2	Fugitive PM10	Exhaust PM10	PM10 Total	Fugitive PM2.5	Exhaust PM2.5	PM2.5 Total	Bio- CO2	NBio- CO2	Total CO2	CH4	N2O	CO2e
Category	tons/yr										MT/yr					
Hauling	0.0000	0.0000	0.0000	0.0000	0.0000	0.0000	0.0000	0.0000	0.0000	0.0000	0.0000	0.0000	0.0000	0.0000	0.0000	0.0000
Vendor	0.0000	0.0000	0.0000	0.0000	0.0000	0.0000	0.0000	0.0000	0.0000	0.0000	0.0000	0.0000	0.0000	0.0000	0.0000	0.0000
Worker	0.0000	0.0000	0.0000	0.0000	0.0000	0.0000	0.0000	0.0000	0.0000	0.0000	0.0000	0.0000	0.0000	0.0000	0.0000	0.0000
Total	**0.0000**	**0.0000**	**0.0000**	**0.0000**	**0.0000**	**0.0000**	**0.0000**	**0.0000**	**0.0000**	**0.0000**	**0.0000**	**0.0000**	**0.0000**	**0.0000**	**0.0000**	**0.0000**

3.57 Year 2 Month 8 - 2021

Unmitigated Construction On-Site

	ROG	NOx	CO	SO2	Fugitive PM10	Exhaust PM10	PM10 Total	Fugitive PM2.5	Exhaust PM2.5	PM2.5 Total	Bio- CO2	NBio- CO2	Total CO2	CH4	N2O	CO2e
Category	tons/yr										MT/yr					
Off-Road	0.1283	1.4347	0.7394	1.9900e-003		0.0580	0.0580		0.0535	0.0535	0.0000	173.4793	173.4793	0.0550	0.0000	174.6349
Total	**0.1283**	**1.4347**	**0.7394**	**1.9900e-003**		**0.0580**	**0.0580**		**0.0535**	**0.0535**	**0.0000**	**173.4793**	**173.4793**	**0.0550**	**0.0000**	**174.6349**

3.57 Year 2 Month 8 - 2021

Unmitigated Construction Off-Site

	ROG	NOx	CO	SO2	Fugitive PM10	Exhaust PM10	PM10 Total	Fugitive PM2.5	Exhaust PM2.5	PM2.5 Total	Bio- CO2	NBio- CO2	Total CO2	CH4	N2O	CO2e
Category	tons/yr										MT/yr					
Hauling	0.0000	0.0000	0.0000	0.0000	0.0000	0.0000	0.0000	0.0000	0.0000	0.0000	0.0000	0.0000	0.0000	0.0000	0.0000	0.0000
Vendor	0.0000	0.0000	0.0000	0.0000	0.0000	0.0000	0.0000	0.0000	0.0000	0.0000	0.0000	0.0000	0.0000	0.0000	0.0000	0.0000
Worker	0.0000	0.0000	0.0000	0.0000	0.0000	0.0000	0.0000	0.0000	0.0000	0.0000	0.0000	0.0000	0.0000	0.0000	0.0000	0.0000
Total	**0.0000**	**0.0000**	**0.0000**	**0.0000**	**0.0000**	**0.0000**	**0.0000**	**0.0000**	**0.0000**	**0.0000**	**0.0000**	**0.0000**	**0.0000**	**0.0000**	**0.0000**	**0.0000**

Mitigated Construction On-Site

	ROG	NOx	CO	SO2	Fugitive PM10	Exhaust PM10	PM10 Total	Fugitive PM2.5	Exhaust PM2.5	PM2.5 Total	Bio- CO2	NBio- CO2	Total CO2	CH4	N2O	CO2e
Category	tons/yr										MT/yr					
Off-Road	0.0248	0.1316	0.9997	1.9900e-003		3.2200e-003	3.2200e-003		3.2200e-003	3.2200e-003	0.0000	173.4791	173.4791	0.0550	0.0000	174.6347
Total	**0.0248**	**0.1316**	**0.9997**	**1.9900e-003**		**3.2200e-003**	**3.2200e-003**		**3.2200e-003**	**3.2200e-003**	**0.0000**	**173.4791**	**173.4791**	**0.0550**	**0.0000**	**174.6347**

3.57 Year 2 Month 8 - 2021

Mitigated Construction Off-Site

	ROG	NOx	CO	SO2	Fugitive PM10	Exhaust PM10	PM10 Total	Fugitive PM2.5	Exhaust PM2.5	PM2.5 Total	Bio- CO2	NBio- CO2	Total CO2	CH4	N2O	CO2e
Category	tons/yr										MT/yr					
Hauling	0.0000	0.0000	0.0000	0.0000	0.0000	0.0000	0.0000	0.0000	0.0000	0.0000	0.0000	0.0000	0.0000	0.0000	0.0000	0.0000
Vendor	0.0000	0.0000	0.0000	0.0000	0.0000	0.0000	0.0000	0.0000	0.0000	0.0000	0.0000	0.0000	0.0000	0.0000	0.0000	0.0000
Worker	0.0000	0.0000	0.0000	0.0000	0.0000	0.0000	0.0000	0.0000	0.0000	0.0000	0.0000	0.0000	0.0000	0.0000	0.0000	0.0000
Total	**0.0000**	**0.0000**	**0.0000**	**0.0000**	**0.0000**	**0.0000**	**0.0000**	**0.0000**	**0.0000**	**0.0000**	**0.0000**	**0.0000**	**0.0000**	**0.0000**	**0.0000**	**0.0000**

3.58 Year 2 Month 9 - 2021

Unmitigated Construction On-Site

	ROG	NOx	CO	SO2	Fugitive PM10	Exhaust PM10	PM10 Total	Fugitive PM2.5	Exhaust PM2.5	PM2.5 Total	Bio- CO2	NBio- CO2	Total CO2	CH4	N2O	CO2e
Category	tons/yr										MT/yr					
Off-Road	0.0958	1.1281	0.5258	1.5800e-003		0.0439	0.0439		0.0404	0.0404	0.0000	138.4395	138.4395	0.0448	0.0000	139.3797
Total	**0.0958**	**1.1281**	**0.5258**	**1.5800e-003**		**0.0439**	**0.0439**		**0.0404**	**0.0404**	**0.0000**	**138.4395**	**138.4395**	**0.0448**	**0.0000**	**139.3797**

3.58 Year 2 Month 9 - 2021

Unmitigated Construction Off-Site

	ROG	NOx	CO	SO2	Fugitive PM10	Exhaust PM10	PM10 Total	Fugitive PM2.5	Exhaust PM2.5	PM2.5 Total	Bio- CO2	NBio- CO2	Total CO2	CH4	N2O	CO2e
Category	tons/yr										MT/yr					
Hauling	0.0000	0.0000	0.0000	0.0000	0.0000	0.0000	0.0000	0.0000	0.0000	0.0000	0.0000	0.0000	0.0000	0.0000	0.0000	0.0000
Vendor	0.0000	0.0000	0.0000	0.0000	0.0000	0.0000	0.0000	0.0000	0.0000	0.0000	0.0000	0.0000	0.0000	0.0000	0.0000	0.0000
Worker	0.0000	0.0000	0.0000	0.0000	0.0000	0.0000	0.0000	0.0000	0.0000	0.0000	0.0000	0.0000	0.0000	0.0000	0.0000	0.0000
Total	**0.0000**	**0.0000**	**0.0000**	**0.0000**	**0.0000**	**0.0000**	**0.0000**	**0.0000**	**0.0000**	**0.0000**	**0.0000**	**0.0000**	**0.0000**	**0.0000**	**0.0000**	**0.0000**

Mitigated Construction On-Site

	ROG	NOx	CO	SO2	Fugitive PM10	Exhaust PM10	PM10 Total	Fugitive PM2.5	Exhaust PM2.5	PM2.5 Total	Bio- CO2	NBio- CO2	Total CO2	CH4	N2O	CO2e
Category	tons/yr										MT/yr					
Off-Road	0.0194	0.0839	0.7569	1.5800e-003		2.5800e-003	2.5800e-003		2.5800e-003	2.5800e-003	0.0000	138.4393	138.4393	0.0448	0.0000	139.3796
Total	**0.0194**	**0.0839**	**0.7569**	**1.5800e-003**		**2.5800e-003**	**2.5800e-003**		**2.5800e-003**	**2.5800e-003**	**0.0000**	**138.4393**	**138.4393**	**0.0448**	**0.0000**	**139.3796**

3.58 Year 2 Month 9 - 2021

Mitigated Construction Off-Site

	ROG	NOx	CO	SO2	Fugitive PM10	Exhaust PM10	PM10 Total	Fugitive PM2.5	Exhaust PM2.5	PM2.5 Total	Bio- CO2	NBio- CO2	Total CO2	CH4	N2O	CO2e
Category	tons/yr										MT/yr					
Hauling	0.0000	0.0000	0.0000	0.0000	0.0000	0.0000	0.0000	0.0000	0.0000	0.0000	0.0000	0.0000	0.0000	0.0000	0.0000	0.0000
Vendor	0.0000	0.0000	0.0000	0.0000	0.0000	0.0000	0.0000	0.0000	0.0000	0.0000	0.0000	0.0000	0.0000	0.0000	0.0000	0.0000
Worker	0.0000	0.0000	0.0000	0.0000	0.0000	0.0000	0.0000	0.0000	0.0000	0.0000	0.0000	0.0000	0.0000	0.0000	0.0000	0.0000
Total	**0.0000**	**0.0000**	**0.0000**	**0.0000**	**0.0000**	**0.0000**	**0.0000**	**0.0000**	**0.0000**	**0.0000**	**0.0000**	**0.0000**	**0.0000**	**0.0000**	**0.0000**	**0.0000**

3.59 Year 2 Month 10 - 2021

Unmitigated Construction On-Site

	ROG	NOx	CO	SO2	Fugitive PM10	Exhaust PM10	PM10 Total	Fugitive PM2.5	Exhaust PM2.5	PM2.5 Total	Bio- CO2	NBio- CO2	Total CO2	CH4	N2O	CO2e
Category	tons/yr										MT/yr					
Off-Road	0.0958	1.1281	0.5258	1.5800e-003		0.0439	0.0439		0.0404	0.0404	0.0000	138.4395	138.4395	0.0448	0.0000	139.3797
Total	**0.0958**	**1.1281**	**0.5258**	**1.5800e-003**		**0.0439**	**0.0439**		**0.0404**	**0.0404**	**0.0000**	**138.4395**	**138.4395**	**0.0448**	**0.0000**	**139.3797**

3.59 Year 2 Month 10 - 2021

Unmitigated Construction Off-Site

	ROG	NOx	CO	SO2	Fugitive PM10	Exhaust PM10	PM10 Total	Fugitive PM2.5	Exhaust PM2.5	PM2.5 Total	Bio- CO2	NBio- CO2	Total CO2	CH4	N2O	CO2e
Category	tons/yr										MT/yr					
Hauling	0.0000	0.0000	0.0000	0.0000	0.0000	0.0000	0.0000	0.0000	0.0000	0.0000	0.0000	0.0000	0.0000	0.0000	0.0000	0.0000
Vendor	0.0000	0.0000	0.0000	0.0000	0.0000	0.0000	0.0000	0.0000	0.0000	0.0000	0.0000	0.0000	0.0000	0.0000	0.0000	0.0000
Worker	0.0000	0.0000	0.0000	0.0000	0.0000	0.0000	0.0000	0.0000	0.0000	0.0000	0.0000	0.0000	0.0000	0.0000	0.0000	0.0000
Total	**0.0000**	**0.0000**	**0.0000**	**0.0000**	**0.0000**	**0.0000**	**0.0000**	**0.0000**	**0.0000**	**0.0000**	**0.0000**	**0.0000**	**0.0000**	**0.0000**	**0.0000**	**0.0000**

Mitigated Construction On-Site

	ROG	NOx	CO	SO2	Fugitive PM10	Exhaust PM10	PM10 Total	Fugitive PM2.5	Exhaust PM2.5	PM2.5 Total	Bio- CO2	NBio- CO2	Total CO2	CH4	N2O	CO2e
Category	tons/yr										MT/yr					
Off-Road	0.0194	0.0839	0.7569	1.5800e-003		2.5800e-003	2.5800e-003		2.5800e-003	2.5800e-003	0.0000	138.4393	138.4393	0.0448	0.0000	139.3796
Total	**0.0194**	**0.0839**	**0.7569**	**1.5800e-003**		**2.5800e-003**	**2.5800e-003**		**2.5800e-003**	**2.5800e-003**	**0.0000**	**138.4393**	**138.4393**	**0.0448**	**0.0000**	**139.3796**

3.59 Year 2 Month 10 - 2021

Mitigated Construction Off-Site

	ROG	NOx	CO	SO2	Fugitive PM10	Exhaust PM10	PM10 Total	Fugitive PM2.5	Exhaust PM2.5	PM2.5 Total	Bio- CO2	NBio- CO2	Total CO2	CH4	N2O	CO2e
Category	tons/yr										MT/yr					
Hauling	0.0000	0.0000	0.0000	0.0000	0.0000	0.0000	0.0000	0.0000	0.0000	0.0000	0.0000	0.0000	0.0000	0.0000	0.0000	0.0000
Vendor	0.0000	0.0000	0.0000	0.0000	0.0000	0.0000	0.0000	0.0000	0.0000	0.0000	0.0000	0.0000	0.0000	0.0000	0.0000	0.0000
Worker	0.0000	0.0000	0.0000	0.0000	0.0000	0.0000	0.0000	0.0000	0.0000	0.0000	0.0000	0.0000	0.0000	0.0000	0.0000	0.0000
Total	**0.0000**	**0.0000**	**0.0000**	**0.0000**	**0.0000**	**0.0000**	**0.0000**	**0.0000**	**0.0000**	**0.0000**	**0.0000**	**0.0000**	**0.0000**	**0.0000**	**0.0000**	**0.0000**

3.60 Year 2 Month 11 - 2021

Unmitigated Construction Off-Site

	ROG	NOx	CO	SO2	Fugitive PM10	Exhaust PM10	PM10 Total	Fugitive PM2.5	Exhaust PM2.5	PM2.5 Total	Bio- CO2	NBio- CO2	Total CO2	CH4	N2O	CO2e
Category	tons/yr										MT/yr					
Hauling					0.0000	0.0000	0.0000	0.0000	0.0000	0.0000	0.0000	0.0000	0.0000	0.0000	0.0000	0.0000
Vendor					0.0000	0.0000	0.0000	0.0000	0.0000	0.0000	0.0000	0.0000	0.0000	0.0000	0.0000	0.0000
Worker					0.0000	0.0000	0.0000	0.0000	0.0000	0.0000	0.0000	0.0000	0.0000	0.0000	0.0000	0.0000
Total					**0.0000**	**0.0000**	**0.0000**	**0.0000**	**0.0000**	**0.0000**	**0.0000**	**0.0000**	**0.0000**	**0.0000**	**0.0000**	**0.0000**

3.60 Year 2 Month 11 - 2021

Mitigated Construction Off-Site

	ROG	NOx	CO	SO2	Fugitive PM10	Exhaust PM10	PM10 Total	Fugitive PM2.5	Exhaust PM2.5	PM2.5 Total	Bio- CO2	NBio- CO2	Total CO2	CH4	N2O	CO2e
Category	tons/yr										MT/yr					
Hauling					0.0000	0.0000	0.0000	0.0000	0.0000	0.0000	0.0000	0.0000	0.0000	0.0000	0.0000	0.0000
Vendor					0.0000	0.0000	0.0000	0.0000	0.0000	0.0000	0.0000	0.0000	0.0000	0.0000	0.0000	0.0000
Worker					0.0000	0.0000	0.0000	0.0000	0.0000	0.0000	0.0000	0.0000	0.0000	0.0000	0.0000	0.0000
Total					**0.0000**	**0.0000**	**0.0000**	**0.0000**	**0.0000**	**0.0000**	**0.0000**	**0.0000**	**0.0000**	**0.0000**	**0.0000**	**0.0000**

3.61 Year 2 Month 12 - 2021

Unmitigated Construction Off-Site

	ROG	NOx	CO	SO2	Fugitive PM10	Exhaust PM10	PM10 Total	Fugitive PM2.5	Exhaust PM2.5	PM2.5 Total	Bio- CO2	NBio- CO2	Total CO2	CH4	N2O	CO2e
Category	tons/yr										MT/yr					
Hauling					0.0000	0.0000	0.0000	0.0000	0.0000	0.0000	0.0000	0.0000	0.0000	0.0000	0.0000	0.0000
Vendor					0.0000	0.0000	0.0000	0.0000	0.0000	0.0000	0.0000	0.0000	0.0000	0.0000	0.0000	0.0000
Worker					0.0000	0.0000	0.0000	0.0000	0.0000	0.0000	0.0000	0.0000	0.0000	0.0000	0.0000	0.0000
Total					**0.0000**	**0.0000**	**0.0000**	**0.0000**	**0.0000**	**0.0000**	**0.0000**	**0.0000**	**0.0000**	**0.0000**	**0.0000**	**0.0000**

3.61 Year 2 Month 12 - 2021

Mitigated Construction Off-Site

	ROG	NOx	CO	SO2	Fugitive PM10	Exhaust PM10	PM10 Total	Fugitive PM2.5	Exhaust PM2.5	PM2.5 Total	Bio- CO2	NBio- CO2	Total CO2	CH4	N2O	CO2e
Category	tons/yr										MT/yr					
Hauling					0.0000	0.0000	0.0000	0.0000	0.0000	0.0000	0.0000	0.0000	0.0000	0.0000	0.0000	0.0000
Vendor					0.0000	0.0000	0.0000	0.0000	0.0000	0.0000	0.0000	0.0000	0.0000	0.0000	0.0000	0.0000
Worker					0.0000	0.0000	0.0000	0.0000	0.0000	0.0000	0.0000	0.0000	0.0000	0.0000	0.0000	0.0000
Total					**0.0000**	**0.0000**	**0.0000**	**0.0000**	**0.0000**	**0.0000**	**0.0000**	**0.0000**	**0.0000**	**0.0000**	**0.0000**	**0.0000**

3.62 Year 3 Month 1 - 2022

Unmitigated Construction Off-Site

	ROG	NOx	CO	SO2	Fugitive PM10	Exhaust PM10	PM10 Total	Fugitive PM2.5	Exhaust PM2.5	PM2.5 Total	Bio- CO2	NBio- CO2	Total CO2	CH4	N2O	CO2e
Category	tons/yr										MT/yr					
Hauling					0.0000	0.0000	0.0000	0.0000	0.0000	0.0000	0.0000	0.0000	0.0000	0.0000	0.0000	0.0000
Vendor					0.0000	0.0000	0.0000	0.0000	0.0000	0.0000	0.0000	0.0000	0.0000	0.0000	0.0000	0.0000
Worker					0.0000	0.0000	0.0000	0.0000	0.0000	0.0000	0.0000	0.0000	0.0000	0.0000	0.0000	0.0000
Total					**0.0000**	**0.0000**	**0.0000**	**0.0000**	**0.0000**	**0.0000**	**0.0000**	**0.0000**	**0.0000**	**0.0000**	**0.0000**	**0.0000**

3.62 Year 3 Month 1 - 2022

Mitigated Construction Off-Site

	ROG	NOx	CO	SO2	Fugitive PM10	Exhaust PM10	PM10 Total	Fugitive PM2.5	Exhaust PM2.5	PM2.5 Total	Bio- CO2	NBio- CO2	Total CO2	CH4	N2O	CO2e
Category	tons/yr										MT/yr					
Hauling					0.0000	0.0000	0.0000	0.0000	0.0000	0.0000	0.0000	0.0000	0.0000	0.0000	0.0000	0.0000
Vendor					0.0000	0.0000	0.0000	0.0000	0.0000	0.0000	0.0000	0.0000	0.0000	0.0000	0.0000	0.0000
Worker					0.0000	0.0000	0.0000	0.0000	0.0000	0.0000	0.0000	0.0000	0.0000	0.0000	0.0000	0.0000
Total					**0.0000**	**0.0000**	**0.0000**	**0.0000**	**0.0000**	**0.0000**	**0.0000**	**0.0000**	**0.0000**	**0.0000**	**0.0000**	**0.0000**

3.63 Year 3 Month 2 - 2022

Unmitigated Construction Off-Site

	ROG	NOx	CO	SO2	Fugitive PM10	Exhaust PM10	PM10 Total	Fugitive PM2.5	Exhaust PM2.5	PM2.5 Total	Bio- CO2	NBio- CO2	Total CO2	CH4	N2O	CO2e
Category	tons/yr										MT/yr					
Hauling					0.0000	0.0000	0.0000	0.0000	0.0000	0.0000	0.0000	0.0000	0.0000	0.0000	0.0000	0.0000
Vendor					0.0000	0.0000	0.0000	0.0000	0.0000	0.0000	0.0000	0.0000	0.0000	0.0000	0.0000	0.0000
Worker					0.0000	0.0000	0.0000	0.0000	0.0000	0.0000	0.0000	0.0000	0.0000	0.0000	0.0000	0.0000
Total					**0.0000**	**0.0000**	**0.0000**	**0.0000**	**0.0000**	**0.0000**	**0.0000**	**0.0000**	**0.0000**	**0.0000**	**0.0000**	**0.0000**

3.63 Year 3 Month 2 - 2022

Mitigated Construction Off-Site

	ROG	NOx	CO	SO2	Fugitive PM10	Exhaust PM10	PM10 Total	Fugitive PM2.5	Exhaust PM2.5	PM2.5 Total	Bio- CO2	NBio- CO2	Total CO2	CH4	N2O	CO2e
Category	tons/yr										MT/yr					
Hauling					0.0000	0.0000	0.0000	0.0000	0.0000	0.0000	0.0000	0.0000	0.0000	0.0000	0.0000	0.0000
Vendor					0.0000	0.0000	0.0000	0.0000	0.0000	0.0000	0.0000	0.0000	0.0000	0.0000	0.0000	0.0000
Worker					0.0000	0.0000	0.0000	0.0000	0.0000	0.0000	0.0000	0.0000	0.0000	0.0000	0.0000	0.0000
Total					**0.0000**	**0.0000**	**0.0000**	**0.0000**	**0.0000**	**0.0000**	**0.0000**	**0.0000**	**0.0000**	**0.0000**	**0.0000**	**0.0000**

3.64 Year 3 Month 3 - 2022

Unmitigated Construction Off-Site

	ROG	NOx	CO	SO2	Fugitive PM10	Exhaust PM10	PM10 Total	Fugitive PM2.5	Exhaust PM2.5	PM2.5 Total	Bio- CO2	NBio- CO2	Total CO2	CH4	N2O	CO2e
Category	tons/yr										MT/yr					
Hauling					0.0000	0.0000	0.0000	0.0000	0.0000	0.0000	0.0000	0.0000	0.0000	0.0000	0.0000	0.0000
Vendor					0.0000	0.0000	0.0000	0.0000	0.0000	0.0000	0.0000	0.0000	0.0000	0.0000	0.0000	0.0000
Worker					0.0000	0.0000	0.0000	0.0000	0.0000	0.0000	0.0000	0.0000	0.0000	0.0000	0.0000	0.0000
Total					**0.0000**	**0.0000**	**0.0000**	**0.0000**	**0.0000**	**0.0000**	**0.0000**	**0.0000**	**0.0000**	**0.0000**	**0.0000**	**0.0000**

3.64 Year 3 Month 3 - 2022

Mitigated Construction Off-Site

	ROG	NOx	CO	SO2	Fugitive PM10	Exhaust PM10	PM10 Total	Fugitive PM2.5	Exhaust PM2.5	PM2.5 Total	Bio- CO2	NBio- CO2	Total CO2	CH4	N2O	CO2e
Category	tons/yr										MT/yr					
Hauling					0.0000	0.0000	0.0000	0.0000	0.0000	0.0000	0.0000	0.0000	0.0000	0.0000	0.0000	0.0000
Vendor					0.0000	0.0000	0.0000	0.0000	0.0000	0.0000	0.0000	0.0000	0.0000	0.0000	0.0000	0.0000
Worker					0.0000	0.0000	0.0000	0.0000	0.0000	0.0000	0.0000	0.0000	0.0000	0.0000	0.0000	0.0000
Total					**0.0000**	**0.0000**	**0.0000**	**0.0000**	**0.0000**	**0.0000**	**0.0000**	**0.0000**	**0.0000**	**0.0000**	**0.0000**	**0.0000**

3.65 Year 3 Month 4 - 2022

Unmitigated Construction On-Site

	ROG	NOx	CO	SO2	Fugitive PM10	Exhaust PM10	PM10 Total	Fugitive PM2.5	Exhaust PM2.5	PM2.5 Total	Bio- CO2	NBio- CO2	Total CO2	CH4	N2O	CO2e
Category	tons/yr										MT/yr					
Off-Road	5.9300e-003	0.0665	0.0301	9.0000e-005		2.7600e-003	2.7600e-003		2.5400e-003	2.5400e-003	0.0000	8.0598	8.0598	2.6100e-003	0.0000	8.1146
Total	**5.9300e-003**	**0.0665**	**0.0301**	**9.0000e-005**		**2.7600e-003**	**2.7600e-003**		**2.5400e-003**	**2.5400e-003**	**0.0000**	**8.0598**	**8.0598**	**2.6100e-003**	**0.0000**	**8.1146**

3.65 Year 3 Month 4 - 2022

Unmitigated Construction Off-Site

	ROG	NOx	CO	SO2	Fugitive PM10	Exhaust PM10	PM10 Total	Fugitive PM2.5	Exhaust PM2.5	PM2.5 Total	Bio- CO2	NBio- CO2	Total CO2	CH4	N2O	CO2e
Category	tons/yr										MT/yr					
Hauling	0.0000	0.0000	0.0000	0.0000	0.0000	0.0000	0.0000	0.0000	0.0000	0.0000	0.0000	0.0000	0.0000	0.0000	0.0000	0.0000
Vendor	0.0000	0.0000	0.0000	0.0000	0.0000	0.0000	0.0000	0.0000	0.0000	0.0000	0.0000	0.0000	0.0000	0.0000	0.0000	0.0000
Worker	0.0000	0.0000	0.0000	0.0000	0.0000	0.0000	0.0000	0.0000	0.0000	0.0000	0.0000	0.0000	0.0000	0.0000	0.0000	0.0000
Total	**0.0000**	**0.0000**	**0.0000**	**0.0000**	**0.0000**	**0.0000**	**0.0000**	**0.0000**	**0.0000**	**0.0000**	**0.0000**	**0.0000**	**0.0000**	**0.0000**	**0.0000**	**0.0000**

Mitigated Construction On-Site

	ROG	NOx	CO	SO2	Fugitive PM10	Exhaust PM10	PM10 Total	Fugitive PM2.5	Exhaust PM2.5	PM2.5 Total	Bio- CO2	NBio- CO2	Total CO2	CH4	N2O	CO2e
Category	tons/yr										MT/yr					
Off-Road	1.1300e-003	4.8800e-003	0.0413	9.0000e-005		1.5000e-004	1.5000e-004		1.5000e-004	1.5000e-004	0.0000	8.0598	8.0598	2.6100e-003	0.0000	8.1146
Total	**1.1300e-003**	**4.8800e-003**	**0.0413**	**9.0000e-005**		**1.5000e-004**	**1.5000e-004**		**1.5000e-004**	**1.5000e-004**	**0.0000**	**8.0598**	**8.0598**	**2.6100e-003**	**0.0000**	**8.1146**

3.65 Year 3 Month 4 - 2022

Mitigated Construction Off-Site

	ROG	NOx	CO	SO2	Fugitive PM10	Exhaust PM10	PM10 Total	Fugitive PM2.5	Exhaust PM2.5	PM2.5 Total	Bio- CO2	NBio- CO2	Total CO2	CH4	N2O	CO2e
Category	tons/yr										MT/yr					
Hauling	0.0000	0.0000	0.0000	0.0000	0.0000	0.0000	0.0000	0.0000	0.0000	0.0000	0.0000	0.0000	0.0000	0.0000	0.0000	0.0000
Vendor	0.0000	0.0000	0.0000	0.0000	0.0000	0.0000	0.0000	0.0000	0.0000	0.0000	0.0000	0.0000	0.0000	0.0000	0.0000	0.0000
Worker	0.0000	0.0000	0.0000	0.0000	0.0000	0.0000	0.0000	0.0000	0.0000	0.0000	0.0000	0.0000	0.0000	0.0000	0.0000	0.0000
Total	**0.0000**	**0.0000**	**0.0000**	**0.0000**	**0.0000**	**0.0000**	**0.0000**	**0.0000**	**0.0000**	**0.0000**	**0.0000**	**0.0000**	**0.0000**	**0.0000**	**0.0000**	**0.0000**

3.66 Year 3 Month 5 - 2022

Unmitigated Construction On-Site

	ROG	NOx	CO	SO2	Fugitive PM10	Exhaust PM10	PM10 Total	Fugitive PM2.5	Exhaust PM2.5	PM2.5 Total	Bio- CO2	NBio- CO2	Total CO2	CH4	N2O	CO2e
Category	tons/yr										MT/yr					
Off-Road	5.9300e-003	0.0665	0.0301	9.0000e-005		2.7600e-003	2.7600e-003		2.5400e-003	2.5400e-003	0.0000	8.0598	8.0598	2.6100e-003	0.0000	8.1146
Total	**5.9300e-003**	**0.0665**	**0.0301**	**9.0000e-005**		**2.7600e-003**	**2.7600e-003**		**2.5400e-003**	**2.5400e-003**	**0.0000**	**8.0598**	**8.0598**	**2.6100e-003**	**0.0000**	**8.1146**

3.66 Year 3 Month 5 - 2022

Unmitigated Construction Off-Site

	ROG	NOx	CO	SO2	Fugitive PM10	Exhaust PM10	PM10 Total	Fugitive PM2.5	Exhaust PM2.5	PM2.5 Total	Bio- CO2	NBio- CO2	Total CO2	CH4	N2O	CO2e
Category	tons/yr										MT/yr					
Hauling	0.0000	0.0000	0.0000	0.0000	0.0000	0.0000	0.0000	0.0000	0.0000	0.0000	0.0000	0.0000	0.0000	0.0000	0.0000	0.0000
Vendor	0.0000	0.0000	0.0000	0.0000	0.0000	0.0000	0.0000	0.0000	0.0000	0.0000	0.0000	0.0000	0.0000	0.0000	0.0000	0.0000
Worker	0.0000	0.0000	0.0000	0.0000	0.0000	0.0000	0.0000	0.0000	0.0000	0.0000	0.0000	0.0000	0.0000	0.0000	0.0000	0.0000
Total	**0.0000**	**0.0000**	**0.0000**	**0.0000**	**0.0000**	**0.0000**	**0.0000**	**0.0000**	**0.0000**	**0.0000**	**0.0000**	**0.0000**	**0.0000**	**0.0000**	**0.0000**	**0.0000**

Mitigated Construction On-Site

	ROG	NOx	CO	SO2	Fugitive PM10	Exhaust PM10	PM10 Total	Fugitive PM2.5	Exhaust PM2.5	PM2.5 Total	Bio- CO2	NBio- CO2	Total CO2	CH4	N2O	CO2e
Category	tons/yr										MT/yr					
Off-Road	1.1300e-003	4.8800e-003	0.0413	9.0000e-005		1.5000e-004	1.5000e-004		1.5000e-004	1.5000e-004	0.0000	8.0598	8.0598	2.6100e-003	0.0000	8.1146
Total	**1.1300e-003**	**4.8800e-003**	**0.0413**	**9.0000e-005**		**1.5000e-004**	**1.5000e-004**		**1.5000e-004**	**1.5000e-004**	**0.0000**	**8.0598**	**8.0598**	**2.6100e-003**	**0.0000**	**8.1146**

3.66 Year 3 Month 5 - 2022

Mitigated Construction Off-Site

	ROG	NOx	CO	SO2	Fugitive PM10	Exhaust PM10	PM10 Total	Fugitive PM2.5	Exhaust PM2.5	PM2.5 Total	Bio- CO2	NBio- CO2	Total CO2	CH4	N2O	CO2e
Category	tons/yr										MT/yr					
Hauling	0.0000	0.0000	0.0000	0.0000	0.0000	0.0000	0.0000	0.0000	0.0000	0.0000	0.0000	0.0000	0.0000	0.0000	0.0000	0.0000
Vendor	0.0000	0.0000	0.0000	0.0000	0.0000	0.0000	0.0000	0.0000	0.0000	0.0000	0.0000	0.0000	0.0000	0.0000	0.0000	0.0000
Worker	0.0000	0.0000	0.0000	0.0000	0.0000	0.0000	0.0000	0.0000	0.0000	0.0000	0.0000	0.0000	0.0000	0.0000	0.0000	0.0000
Total	**0.0000**	**0.0000**	**0.0000**	**0.0000**	**0.0000**	**0.0000**	**0.0000**	**0.0000**	**0.0000**	**0.0000**	**0.0000**	**0.0000**	**0.0000**	**0.0000**	**0.0000**	**0.0000**

3.67 Year 3 Month 6 - 2022

Unmitigated Construction On-Site

	ROG	NOx	CO	SO2	Fugitive PM10	Exhaust PM10	PM10 Total	Fugitive PM2.5	Exhaust PM2.5	PM2.5 Total	Bio- CO2	NBio- CO2	Total CO2	CH4	N2O	CO2e
Category	tons/yr										MT/yr					
Off-Road	5.9300e-003	0.0665	0.0301	9.0000e-005		2.7600e-003	2.7600e-003		2.5400e-003	2.5400e-003	0.0000	8.0598	8.0598	2.6100e-003	0.0000	8.1146
Total	**5.9300e-003**	**0.0665**	**0.0301**	**9.0000e-005**		**2.7600e-003**	**2.7600e-003**		**2.5400e-003**	**2.5400e-003**	**0.0000**	**8.0598**	**8.0598**	**2.6100e-003**	**0.0000**	**8.1146**

3.67 Year 3 Month 6 - 2022

Unmitigated Construction Off-Site

	ROG	NOx	CO	SO2	Fugitive PM10	Exhaust PM10	PM10 Total	Fugitive PM2.5	Exhaust PM2.5	PM2.5 Total	Bio- CO2	NBio- CO2	Total CO2	CH4	N2O	CO2e
Category	tons/yr										MT/yr					
Hauling	0.0000	0.0000	0.0000	0.0000	0.0000	0.0000	0.0000	0.0000	0.0000	0.0000	0.0000	0.0000	0.0000	0.0000	0.0000	0.0000
Vendor	0.0000	0.0000	0.0000	0.0000	0.0000	0.0000	0.0000	0.0000	0.0000	0.0000	0.0000	0.0000	0.0000	0.0000	0.0000	0.0000
Worker	0.0000	0.0000	0.0000	0.0000	0.0000	0.0000	0.0000	0.0000	0.0000	0.0000	0.0000	0.0000	0.0000	0.0000	0.0000	0.0000
Total	**0.0000**	**0.0000**	**0.0000**	**0.0000**	**0.0000**	**0.0000**	**0.0000**	**0.0000**	**0.0000**	**0.0000**	**0.0000**	**0.0000**	**0.0000**	**0.0000**	**0.0000**	**0.0000**

Mitigated Construction On-Site

	ROG	NOx	CO	SO2	Fugitive PM10	Exhaust PM10	PM10 Total	Fugitive PM2.5	Exhaust PM2.5	PM2.5 Total	Bio- CO2	NBio- CO2	Total CO2	CH4	N2O	CO2e
Category	tons/yr										MT/yr					
Off-Road	1.1300e-003	4.8800e-003	0.0413	9.0000e-005		1.5000e-004	1.5000e-004		1.5000e-004	1.5000e-004	0.0000	8.0598	8.0598	2.6100e-003	0.0000	8.1146
Total	**1.1300e-003**	**4.8800e-003**	**0.0413**	**9.0000e-005**		**1.5000e-004**	**1.5000e-004**		**1.5000e-004**	**1.5000e-004**	**0.0000**	**8.0598**	**8.0598**	**2.6100e-003**	**0.0000**	**8.1146**

3.67 Year 3 Month 6 - 2022

Mitigated Construction Off-Site

	ROG	NOx	CO	SO2	Fugitive PM10	Exhaust PM10	PM10 Total	Fugitive PM2.5	Exhaust PM2.5	PM2.5 Total	Bio- CO2	NBio- CO2	Total CO2	CH4	N2O	CO2e
Category	tons/yr										MT/yr					
Hauling	0.0000	0.0000	0.0000	0.0000	0.0000	0.0000	0.0000	0.0000	0.0000	0.0000	0.0000	0.0000	0.0000	0.0000	0.0000	0.0000
Vendor	0.0000	0.0000	0.0000	0.0000	0.0000	0.0000	0.0000	0.0000	0.0000	0.0000	0.0000	0.0000	0.0000	0.0000	0.0000	0.0000
Worker	0.0000	0.0000	0.0000	0.0000	0.0000	0.0000	0.0000	0.0000	0.0000	0.0000	0.0000	0.0000	0.0000	0.0000	0.0000	0.0000
Total	**0.0000**	**0.0000**	**0.0000**	**0.0000**	**0.0000**	**0.0000**	**0.0000**	**0.0000**	**0.0000**	**0.0000**	**0.0000**	**0.0000**	**0.0000**	**0.0000**	**0.0000**	**0.0000**

3.68 Year 3 Month 7 - 2022

Unmitigated Construction Off-Site

	ROG	NOx	CO	SO2	Fugitive PM10	Exhaust PM10	PM10 Total	Fugitive PM2.5	Exhaust PM2.5	PM2.5 Total	Bio- CO2	NBio- CO2	Total CO2	CH4	N2O	CO2e
Category	tons/yr										MT/yr					
Hauling	0.0000	0.0000	0.0000	0.0000	0.0000	0.0000	0.0000	0.0000	0.0000	0.0000	0.0000	0.0000	0.0000	0.0000	0.0000	0.0000
Vendor	0.0000	0.0000	0.0000	0.0000	0.0000	0.0000	0.0000	0.0000	0.0000	0.0000	0.0000	0.0000	0.0000	0.0000	0.0000	0.0000
Worker	0.0000	0.0000	0.0000	0.0000	0.0000	0.0000	0.0000	0.0000	0.0000	0.0000	0.0000	0.0000	0.0000	0.0000	0.0000	0.0000
Total	**0.0000**	**0.0000**	**0.0000**	**0.0000**	**0.0000**	**0.0000**	**0.0000**	**0.0000**	**0.0000**	**0.0000**	**0.0000**	**0.0000**	**0.0000**	**0.0000**	**0.0000**	**0.0000**

3.68 Year 3 Month 7 - 2022

Mitigated Construction Off-Site

	ROG	NOx	CO	SO2	Fugitive PM10	Exhaust PM10	PM10 Total	Fugitive PM2.5	Exhaust PM2.5	PM2.5 Total	Bio- CO2	NBio- CO2	Total CO2	CH4	N2O	CO2e
Category	tons/yr										MT/yr					
Hauling	0.0000	0.0000	0.0000	0.0000	0.0000	0.0000	0.0000	0.0000	0.0000	0.0000	0.0000	0.0000	0.0000	0.0000	0.0000	0.0000
Vendor	0.0000	0.0000	0.0000	0.0000	0.0000	0.0000	0.0000	0.0000	0.0000	0.0000	0.0000	0.0000	0.0000	0.0000	0.0000	0.0000
Worker	0.0000	0.0000	0.0000	0.0000	0.0000	0.0000	0.0000	0.0000	0.0000	0.0000	0.0000	0.0000	0.0000	0.0000	0.0000	0.0000
Total	**0.0000**	**0.0000**	**0.0000**	**0.0000**	**0.0000**	**0.0000**	**0.0000**	**0.0000**	**0.0000**	**0.0000**	**0.0000**	**0.0000**	**0.0000**	**0.0000**	**0.0000**	**0.0000**

3.69 Year 3 Month 8 - 2022

Unmitigated Construction On-Site

	ROG	NOx	CO	SO2	Fugitive PM10	Exhaust PM10	PM10 Total	Fugitive PM2.5	Exhaust PM2.5	PM2.5 Total	Bio- CO2	NBio- CO2	Total CO2	CH4	N2O	CO2e
Category	tons/yr										MT/yr					
Off-Road	0.0882	0.9883	0.5176	1.6400e-003		0.0387	0.0387		0.0356	0.0356	0.0000	143.6729	143.6729	0.0465	0.0000	144.6487
Total	**0.0882**	**0.9883**	**0.5176**	**1.6400e-003**		**0.0387**	**0.0387**		**0.0356**	**0.0356**	**0.0000**	**143.6729**	**143.6729**	**0.0465**	**0.0000**	**144.6487**

3.69 Year 3 Month 8 - 2022

Unmitigated Construction Off-Site

	ROG	NOx	CO	SO2	Fugitive PM10	Exhaust PM10	PM10 Total	Fugitive PM2.5	Exhaust PM2.5	PM2.5 Total	Bio- CO2	NBio- CO2	Total CO2	CH4	N2O	CO2e
Category	tons/yr										MT/yr					
Hauling	0.0000	0.0000	0.0000	0.0000	0.0000	0.0000	0.0000	0.0000	0.0000	0.0000	0.0000	0.0000	0.0000	0.0000	0.0000	0.0000
Vendor	0.0000	0.0000	0.0000	0.0000	0.0000	0.0000	0.0000	0.0000	0.0000	0.0000	0.0000	0.0000	0.0000	0.0000	0.0000	0.0000
Worker	0.0000	0.0000	0.0000	0.0000	0.0000	0.0000	0.0000	0.0000	0.0000	0.0000	0.0000	0.0000	0.0000	0.0000	0.0000	0.0000
Total	**0.0000**	**0.0000**	**0.0000**	**0.0000**	**0.0000**	**0.0000**	**0.0000**	**0.0000**	**0.0000**	**0.0000**	**0.0000**	**0.0000**	**0.0000**	**0.0000**	**0.0000**	**0.0000**

Mitigated Construction On-Site

	ROG	NOx	CO	SO2	Fugitive PM10	Exhaust PM10	PM10 Total	Fugitive PM2.5	Exhaust PM2.5	PM2.5 Total	Bio- CO2	NBio- CO2	Total CO2	CH4	N2O	CO2e
Category	tons/yr										MT/yr					
Off-Road	0.0201	0.0871	0.7860	1.6400e-003		2.6800e-003	2.6800e-003		2.6800e-003	2.6800e-003	0.0000	143.6728	143.6728	0.0465	0.0000	144.6486
Total	**0.0201**	**0.0871**	**0.7860**	**1.6400e-003**		**2.6800e-003**	**2.6800e-003**		**2.6800e-003**	**2.6800e-003**	**0.0000**	**143.6728**	**143.6728**	**0.0465**	**0.0000**	**144.6486**

3.69 Year 3 Month 8 - 2022

Mitigated Construction Off-Site

	ROG	NOx	CO	SO2	Fugitive PM10	Exhaust PM10	PM10 Total	Fugitive PM2.5	Exhaust PM2.5	PM2.5 Total	Bio- CO2	NBio- CO2	Total CO2	CH4	N2O	CO2e
Category	tons/yr										MT/yr					
Hauling	0.0000	0.0000	0.0000	0.0000	0.0000	0.0000	0.0000	0.0000	0.0000	0.0000	0.0000	0.0000	0.0000	0.0000	0.0000	0.0000
Vendor	0.0000	0.0000	0.0000	0.0000	0.0000	0.0000	0.0000	0.0000	0.0000	0.0000	0.0000	0.0000	0.0000	0.0000	0.0000	0.0000
Worker	0.0000	0.0000	0.0000	0.0000	0.0000	0.0000	0.0000	0.0000	0.0000	0.0000	0.0000	0.0000	0.0000	0.0000	0.0000	0.0000
Total	**0.0000**	**0.0000**	**0.0000**	**0.0000**	**0.0000**	**0.0000**	**0.0000**	**0.0000**	**0.0000**	**0.0000**	**0.0000**	**0.0000**	**0.0000**	**0.0000**	**0.0000**	**0.0000**

3.70 Year 3 Month 9 - 2022

Unmitigated Construction On-Site

	ROG	NOx	CO	SO2	Fugitive PM10	Exhaust PM10	PM10 Total	Fugitive PM2.5	Exhaust PM2.5	PM2.5 Total	Bio- CO2	NBio- CO2	Total CO2	CH4	N2O	CO2e
Category	tons/yr										MT/yr					
Off-Road	0.0850	0.9517	0.4984	1.5800e-003		0.0373	0.0373		0.0343	0.0343	0.0000	138.3517	138.3517	0.0448	0.0000	139.2914
Total	**0.0850**	**0.9517**	**0.4984**	**1.5800e-003**		**0.0373**	**0.0373**		**0.0343**	**0.0343**	**0.0000**	**138.3517**	**138.3517**	**0.0448**	**0.0000**	**139.2914**

3.70 Year 3 Month 9 - 2022

Unmitigated Construction Off-Site

	ROG	NOx	CO	SO2	Fugitive PM10	Exhaust PM10	PM10 Total	Fugitive PM2.5	Exhaust PM2.5	PM2.5 Total	Bio- CO2	NBio- CO2	Total CO2	CH4	N2O	CO2e
Category	tons/yr										MT/yr					
Hauling	0.0000	0.0000	0.0000	0.0000	0.0000	0.0000	0.0000	0.0000	0.0000	0.0000	0.0000	0.0000	0.0000	0.0000	0.0000	0.0000
Vendor	0.0000	0.0000	0.0000	0.0000	0.0000	0.0000	0.0000	0.0000	0.0000	0.0000	0.0000	0.0000	0.0000	0.0000	0.0000	0.0000
Worker	0.0000	0.0000	0.0000	0.0000	0.0000	0.0000	0.0000	0.0000	0.0000	0.0000	0.0000	0.0000	0.0000	0.0000	0.0000	0.0000
Total	**0.0000**	**0.0000**	**0.0000**	**0.0000**	**0.0000**	**0.0000**	**0.0000**	**0.0000**	**0.0000**	**0.0000**	**0.0000**	**0.0000**	**0.0000**	**0.0000**	**0.0000**	**0.0000**

Mitigated Construction On-Site

	ROG	NOx	CO	SO2	Fugitive PM10	Exhaust PM10	PM10 Total	Fugitive PM2.5	Exhaust PM2.5	PM2.5 Total	Bio- CO2	NBio- CO2	Total CO2	CH4	N2O	CO2e
Category	tons/yr										MT/yr					
Off-Road	0.0194	0.0839	0.7569	1.5800e-003		2.5800e-003	2.5800e-003		2.5800e-003	2.5800e-003	0.0000	138.3516	138.3516	0.0448	0.0000	139.2912
Total	**0.0194**	**0.0839**	**0.7569**	**1.5800e-003**		**2.5800e-003**	**2.5800e-003**		**2.5800e-003**	**2.5800e-003**	**0.0000**	**138.3516**	**138.3516**	**0.0448**	**0.0000**	**139.2912**

3.70 Year 3 Month 9 - 2022

Mitigated Construction Off-Site

	ROG	NOx	CO	SO2	Fugitive PM10	Exhaust PM10	PM10 Total	Fugitive PM2.5	Exhaust PM2.5	PM2.5 Total	Bio- CO2	NBio- CO2	Total CO2	CH4	N2O	CO2e
Category	tons/yr										MT/yr					
Hauling	0.0000	0.0000	0.0000	0.0000	0.0000	0.0000	0.0000	0.0000	0.0000	0.0000	0.0000	0.0000	0.0000	0.0000	0.0000	0.0000
Vendor	0.0000	0.0000	0.0000	0.0000	0.0000	0.0000	0.0000	0.0000	0.0000	0.0000	0.0000	0.0000	0.0000	0.0000	0.0000	0.0000
Worker	0.0000	0.0000	0.0000	0.0000	0.0000	0.0000	0.0000	0.0000	0.0000	0.0000	0.0000	0.0000	0.0000	0.0000	0.0000	0.0000
Total	**0.0000**	**0.0000**	**0.0000**	**0.0000**	**0.0000**	**0.0000**	**0.0000**	**0.0000**	**0.0000**	**0.0000**	**0.0000**	**0.0000**	**0.0000**	**0.0000**	**0.0000**	**0.0000**

3.71 Year 3 Month 10 - 2022

Unmitigated Construction On-Site

	ROG	NOx	CO	SO2	Fugitive PM10	Exhaust PM10	PM10 Total	Fugitive PM2.5	Exhaust PM2.5	PM2.5 Total	Bio- CO2	NBio- CO2	Total CO2	CH4	N2O	CO2e
Category	tons/yr										MT/yr					
Off-Road	0.0850	0.9517	0.4984	1.5800e-003		0.0373	0.0373		0.0343	0.0343	0.0000	138.3517	138.3517	0.0448	0.0000	139.2914
Total	**0.0850**	**0.9517**	**0.4984**	**1.5800e-003**		**0.0373**	**0.0373**		**0.0343**	**0.0343**	**0.0000**	**138.3517**	**138.3517**	**0.0448**	**0.0000**	**139.2914**

3.71 Year 3 Month 10 - 2022

Unmitigated Construction Off-Site

	ROG	NOx	CO	SO2	Fugitive PM10	Exhaust PM10	PM10 Total	Fugitive PM2.5	Exhaust PM2.5	PM2.5 Total	Bio- CO2	NBio- CO2	Total CO2	CH4	N2O	CO2e
Category	tons/yr										MT/yr					
Hauling	0.0000	0.0000	0.0000	0.0000	0.0000	0.0000	0.0000	0.0000	0.0000	0.0000	0.0000	0.0000	0.0000	0.0000	0.0000	0.0000
Vendor	0.0000	0.0000	0.0000	0.0000	0.0000	0.0000	0.0000	0.0000	0.0000	0.0000	0.0000	0.0000	0.0000	0.0000	0.0000	0.0000
Worker	0.0000	0.0000	0.0000	0.0000	0.0000	0.0000	0.0000	0.0000	0.0000	0.0000	0.0000	0.0000	0.0000	0.0000	0.0000	0.0000
Total	**0.0000**	**0.0000**	**0.0000**	**0.0000**	**0.0000**	**0.0000**	**0.0000**	**0.0000**	**0.0000**	**0.0000**	**0.0000**	**0.0000**	**0.0000**	**0.0000**	**0.0000**	**0.0000**

Mitigated Construction On-Site

	ROG	NOx	CO	SO2	Fugitive PM10	Exhaust PM10	PM10 Total	Fugitive PM2.5	Exhaust PM2.5	PM2.5 Total	Bio- CO2	NBio- CO2	Total CO2	CH4	N2O	CO2e
Category	tons/yr										MT/yr					
Off-Road	0.0194	0.0839	0.7569	1.5800e-003		2.5800e-003	2.5800e-003		2.5800e-003	2.5800e-003	0.0000	138.3516	138.3516	0.0448	0.0000	139.2912
Total	**0.0194**	**0.0839**	**0.7569**	**1.5800e-003**		**2.5800e-003**	**2.5800e-003**		**2.5800e-003**	**2.5800e-003**	**0.0000**	**138.3516**	**138.3516**	**0.0448**	**0.0000**	**139.2912**

3.71 Year 3 Month 10 - 2022

Mitigated Construction Off-Site

	ROG	NOx	CO	SO2	Fugitive PM10	Exhaust PM10	PM10 Total	Fugitive PM2.5	Exhaust PM2.5	PM2.5 Total	Bio- CO2	NBio- CO2	Total CO2	CH4	N2O	CO2e
Category	tons/yr										MT/yr					
Hauling	0.0000	0.0000	0.0000	0.0000	0.0000	0.0000	0.0000	0.0000	0.0000	0.0000	0.0000	0.0000	0.0000	0.0000	0.0000	0.0000
Vendor	0.0000	0.0000	0.0000	0.0000	0.0000	0.0000	0.0000	0.0000	0.0000	0.0000	0.0000	0.0000	0.0000	0.0000	0.0000	0.0000
Worker	0.0000	0.0000	0.0000	0.0000	0.0000	0.0000	0.0000	0.0000	0.0000	0.0000	0.0000	0.0000	0.0000	0.0000	0.0000	0.0000
Total	**0.0000**	**0.0000**	**0.0000**	**0.0000**	**0.0000**	**0.0000**	**0.0000**	**0.0000**	**0.0000**	**0.0000**	**0.0000**	**0.0000**	**0.0000**	**0.0000**	**0.0000**	**0.0000**

3.72 Year 3 Month 11 - 2022

Unmitigated Construction Off-Site

	ROG	NOx	CO	SO2	Fugitive PM10	Exhaust PM10	PM10 Total	Fugitive PM2.5	Exhaust PM2.5	PM2.5 Total	Bio- CO2	NBio- CO2	Total CO2	CH4	N2O	CO2e
Category	tons/yr										MT/yr					
Hauling					0.0000	0.0000	0.0000	0.0000	0.0000	0.0000	0.0000	0.0000	0.0000	0.0000	0.0000	0.0000
Vendor					0.0000	0.0000	0.0000	0.0000	0.0000	0.0000	0.0000	0.0000	0.0000	0.0000	0.0000	0.0000
Worker					0.0000	0.0000	0.0000	0.0000	0.0000	0.0000	0.0000	0.0000	0.0000	0.0000	0.0000	0.0000
Total					**0.0000**	**0.0000**	**0.0000**	**0.0000**	**0.0000**	**0.0000**	**0.0000**	**0.0000**	**0.0000**	**0.0000**	**0.0000**	**0.0000**

3.72 Year 3 Month 11 - 2022

Mitigated Construction Off-Site

	ROG	NOx	CO	SO2	Fugitive PM10	Exhaust PM10	PM10 Total	Fugitive PM2.5	Exhaust PM2.5	PM2.5 Total	Bio- CO2	NBio- CO2	Total CO2	CH4	N2O	CO2e
Category	tons/yr										MT/yr					
Hauling					0.0000	0.0000	0.0000	0.0000	0.0000	0.0000	0.0000	0.0000	0.0000	0.0000	0.0000	0.0000
Vendor					0.0000	0.0000	0.0000	0.0000	0.0000	0.0000	0.0000	0.0000	0.0000	0.0000	0.0000	0.0000
Worker					0.0000	0.0000	0.0000	0.0000	0.0000	0.0000	0.0000	0.0000	0.0000	0.0000	0.0000	0.0000
Total					**0.0000**	**0.0000**	**0.0000**	**0.0000**	**0.0000**	**0.0000**	**0.0000**	**0.0000**	**0.0000**	**0.0000**	**0.0000**	**0.0000**

3.73 Year 3 Month 12 - 2022

Unmitigated Construction Off-Site

	ROG	NOx	CO	SO2	Fugitive PM10	Exhaust PM10	PM10 Total	Fugitive PM2.5	Exhaust PM2.5	PM2.5 Total	Bio- CO2	NBio- CO2	Total CO2	CH4	N2O	CO2e
Category	tons/yr										MT/yr					
Hauling					0.0000	0.0000	0.0000	0.0000	0.0000	0.0000	0.0000	0.0000	0.0000	0.0000	0.0000	0.0000
Vendor					0.0000	0.0000	0.0000	0.0000	0.0000	0.0000	0.0000	0.0000	0.0000	0.0000	0.0000	0.0000
Worker					0.0000	0.0000	0.0000	0.0000	0.0000	0.0000	0.0000	0.0000	0.0000	0.0000	0.0000	0.0000
Total					**0.0000**	**0.0000**	**0.0000**	**0.0000**	**0.0000**	**0.0000**	**0.0000**	**0.0000**	**0.0000**	**0.0000**	**0.0000**	**0.0000**

3.73 Year 3 Month 12 - 2022

Mitigated Construction Off-Site

	ROG	NOx	CO	SO2	Fugitive PM10	Exhaust PM10	PM10 Total	Fugitive PM2.5	Exhaust PM2.5	PM2.5 Total	Bio- CO2	NBio- CO2	Total CO2	CH4	N2O	CO2e
Category	tons/yr										MT/yr					
Hauling					0.0000	0.0000	0.0000	0.0000	0.0000	0.0000	0.0000	0.0000	0.0000	0.0000	0.0000	0.0000
Vendor					0.0000	0.0000	0.0000	0.0000	0.0000	0.0000	0.0000	0.0000	0.0000	0.0000	0.0000	0.0000
Worker					0.0000	0.0000	0.0000	0.0000	0.0000	0.0000	0.0000	0.0000	0.0000	0.0000	0.0000	0.0000
Total					**0.0000**	**0.0000**	**0.0000**	**0.0000**	**0.0000**	**0.0000**	**0.0000**	**0.0000**	**0.0000**	**0.0000**	**0.0000**	**0.0000**

3.74 Year 4 Month 1 - 2023

Unmitigated Construction On-Site

	ROG	NOx	CO	SO2	Fugitive PM10	Exhaust PM10	PM10 Total	Fugitive PM2.5	Exhaust PM2.5	PM2.5 Total	Bio- CO2	NBio- CO2	Total CO2	CH4	N2O	CO2e
Category	tons/yr										MT/yr					
Off-Road	0.0297	0.2772	0.2959	5.8000e-004		0.0126	0.0126		0.0117	0.0117	0.0000	50.3188	50.3188	0.0159	0.0000	50.6518
Total	**0.0297**	**0.2772**	**0.2959**	**5.8000e-004**		**0.0126**	**0.0126**		**0.0117**	**0.0117**	**0.0000**	**50.3188**	**50.3188**	**0.0159**	**0.0000**	**50.6518**

3.74 Year 4 Month 1 - 2023

Unmitigated Construction Off-Site

	ROG	NOx	CO	SO2	Fugitive PM10	Exhaust PM10	PM10 Total	Fugitive PM2.5	Exhaust PM2.5	PM2.5 Total	Bio- CO2	NBio- CO2	Total CO2	CH4	N2O	CO2e
Category	tons/yr										MT/yr					
Hauling	0.0000	0.0000	0.0000	0.0000	0.0000	0.0000	0.0000	0.0000	0.0000	0.0000	0.0000	0.0000	0.0000	0.0000	0.0000	0.0000
Vendor	0.0000	0.0000	0.0000	0.0000	0.0000	0.0000	0.0000	0.0000	0.0000	0.0000	0.0000	0.0000	0.0000	0.0000	0.0000	0.0000
Worker	0.0000	0.0000	0.0000	0.0000	0.0000	0.0000	0.0000	0.0000	0.0000	0.0000	0.0000	0.0000	0.0000	0.0000	0.0000	0.0000
Total	**0.0000**	**0.0000**	**0.0000**	**0.0000**	**0.0000**	**0.0000**	**0.0000**	**0.0000**	**0.0000**	**0.0000**	**0.0000**	**0.0000**	**0.0000**	**0.0000**	**0.0000**	**0.0000**

Mitigated Construction On-Site

	ROG	NOx	CO	SO2	Fugitive PM10	Exhaust PM10	PM10 Total	Fugitive PM2.5	Exhaust PM2.5	PM2.5 Total	Bio- CO2	NBio- CO2	Total CO2	CH4	N2O	CO2e
Category	tons/yr										MT/yr					
Off-Road	7.0300e-003	0.0407	0.3585	5.8000e-004		9.0000e-004	9.0000e-004		9.0000e-004	9.0000e-004	0.0000	50.3188	50.3188	0.0159	0.0000	50.6518
Total	**7.0300e-003**	**0.0407**	**0.3585**	**5.8000e-004**		**9.0000e-004**	**9.0000e-004**		**9.0000e-004**	**9.0000e-004**	**0.0000**	**50.3188**	**50.3188**	**0.0159**	**0.0000**	**50.6518**

3.74 Year 4 Month 1 - 2023

Mitigated Construction Off-Site

	ROG	NOx	CO	SO2	Fugitive PM10	Exhaust PM10	PM10 Total	Fugitive PM2.5	Exhaust PM2.5	PM2.5 Total	Bio- CO2	NBio- CO2	Total CO2	CH4	N2O	CO2e
Category	tons/yr										MT/yr					
Hauling	0.0000	0.0000	0.0000	0.0000	0.0000	0.0000	0.0000	0.0000	0.0000	0.0000	0.0000	0.0000	0.0000	0.0000	0.0000	0.0000
Vendor	0.0000	0.0000	0.0000	0.0000	0.0000	0.0000	0.0000	0.0000	0.0000	0.0000	0.0000	0.0000	0.0000	0.0000	0.0000	0.0000
Worker	0.0000	0.0000	0.0000	0.0000	0.0000	0.0000	0.0000	0.0000	0.0000	0.0000	0.0000	0.0000	0.0000	0.0000	0.0000	0.0000
Total	**0.0000**	**0.0000**	**0.0000**	**0.0000**	**0.0000**	**0.0000**	**0.0000**	**0.0000**	**0.0000**	**0.0000**	**0.0000**	**0.0000**	**0.0000**	**0.0000**	**0.0000**	**0.0000**

3.75 Year 4 Month 2 - 2023

Unmitigated Construction On-Site

	ROG	NOx	CO	SO2	Fugitive PM10	Exhaust PM10	PM10 Total	Fugitive PM2.5	Exhaust PM2.5	PM2.5 Total	Bio- CO2	NBio- CO2	Total CO2	CH4	N2O	CO2e
Category	tons/yr										MT/yr					
Off-Road	0.0361	0.3201	0.3497	6.5000e-004		0.0147	0.0147		0.0136	0.0136	0.0000	55.8747	55.8747	0.0170	0.0000	56.2319
Total	**0.0361**	**0.3201**	**0.3497**	**6.5000e-004**		**0.0147**	**0.0147**		**0.0136**	**0.0136**	**0.0000**	**55.8747**	**55.8747**	**0.0170**	**0.0000**	**56.2319**

3.75 Year 4 Month 2 - 2023

Unmitigated Construction Off-Site

	ROG	NOx	CO	SO2	Fugitive PM10	Exhaust PM10	PM10 Total	Fugitive PM2.5	Exhaust PM2.5	PM2.5 Total	Bio- CO2	NBio- CO2	Total CO2	CH4	N2O	CO2e
Category	tons/yr										MT/yr					
Hauling	0.0000	0.0000	0.0000	0.0000	0.0000	0.0000	0.0000	0.0000	0.0000	0.0000	0.0000	0.0000	0.0000	0.0000	0.0000	0.0000
Vendor	0.0000	0.0000	0.0000	0.0000	0.0000	0.0000	0.0000	0.0000	0.0000	0.0000	0.0000	0.0000	0.0000	0.0000	0.0000	0.0000
Worker	0.0000	0.0000	0.0000	0.0000	0.0000	0.0000	0.0000	0.0000	0.0000	0.0000	0.0000	0.0000	0.0000	0.0000	0.0000	0.0000
Total	**0.0000**	**0.0000**	**0.0000**	**0.0000**	**0.0000**	**0.0000**	**0.0000**	**0.0000**	**0.0000**	**0.0000**	**0.0000**	**0.0000**	**0.0000**	**0.0000**	**0.0000**	**0.0000**

Mitigated Construction On-Site

	ROG	NOx	CO	SO2	Fugitive PM10	Exhaust PM10	PM10 Total	Fugitive PM2.5	Exhaust PM2.5	PM2.5 Total	Bio- CO2	NBio- CO2	Total CO2	CH4	N2O	CO2e
Category	tons/yr										MT/yr					
Off-Road	8.1100e-003	0.0587	0.4079	6.5000e-004		1.0000e-003	1.0000e-003		1.0000e-003	1.0000e-003	0.0000	55.8746	55.8746	0.0170	0.0000	56.2318
Total	**8.1100e-003**	**0.0587**	**0.4079**	**6.5000e-004**		**1.0000e-003**	**1.0000e-003**		**1.0000e-003**	**1.0000e-003**	**0.0000**	**55.8746**	**55.8746**	**0.0170**	**0.0000**	**56.2318**

3.75 Year 4 Month 2 - 2023

Mitigated Construction Off-Site

	ROG	NOx	CO	SO2	Fugitive PM10	Exhaust PM10	PM10 Total	Fugitive PM2.5	Exhaust PM2.5	PM2.5 Total	Bio- CO2	NBio- CO2	Total CO2	CH4	N2O	CO2e
Category	tons/yr										MT/yr					
Hauling	0.0000	0.0000	0.0000	0.0000	0.0000	0.0000	0.0000	0.0000	0.0000	0.0000	0.0000	0.0000	0.0000	0.0000	0.0000	0.0000
Vendor	0.0000	0.0000	0.0000	0.0000	0.0000	0.0000	0.0000	0.0000	0.0000	0.0000	0.0000	0.0000	0.0000	0.0000	0.0000	0.0000
Worker	0.0000	0.0000	0.0000	0.0000	0.0000	0.0000	0.0000	0.0000	0.0000	0.0000	0.0000	0.0000	0.0000	0.0000	0.0000	0.0000
Total	**0.0000**	**0.0000**	**0.0000**	**0.0000**	**0.0000**	**0.0000**	**0.0000**	**0.0000**	**0.0000**	**0.0000**	**0.0000**	**0.0000**	**0.0000**	**0.0000**	**0.0000**	**0.0000**

3.76 Year 4 Month 3 - 2023

Unmitigated Construction On-Site

	ROG	NOx	CO	SO2	Fugitive PM10	Exhaust PM10	PM10 Total	Fugitive PM2.5	Exhaust PM2.5	PM2.5 Total	Bio- CO2	NBio- CO2	Total CO2	CH4	N2O	CO2e
Category	tons/yr										MT/yr					
Off-Road	0.0259	0.2214	0.2488	3.9000e-004		0.0110	0.0110		0.0102	0.0102	0.0000	33.4153	33.4153	9.6200e-003	0.0000	33.6172
Total	**0.0259**	**0.2214**	**0.2488**	**3.9000e-004**		**0.0110**	**0.0110**		**0.0102**	**0.0102**	**0.0000**	**33.4153**	**33.4153**	**9.6200e-003**	**0.0000**	**33.6172**

3.76 Year 4 Month 3 - 2023

Unmitigated Construction Off-Site

	ROG	NOx	CO	SO2	Fugitive PM10	Exhaust PM10	PM10 Total	Fugitive PM2.5	Exhaust PM2.5	PM2.5 Total	Bio- CO2	NBio- CO2	Total CO2	CH4	N2O	CO2e
Category	tons/yr										MT/yr					
Hauling	0.0000	0.0000	0.0000	0.0000	0.0000	0.0000	0.0000	0.0000	0.0000	0.0000	0.0000	0.0000	0.0000	0.0000	0.0000	0.0000
Vendor	0.0000	0.0000	0.0000	0.0000	0.0000	0.0000	0.0000	0.0000	0.0000	0.0000	0.0000	0.0000	0.0000	0.0000	0.0000	0.0000
Worker	0.0000	0.0000	0.0000	0.0000	0.0000	0.0000	0.0000	0.0000	0.0000	0.0000	0.0000	0.0000	0.0000	0.0000	0.0000	0.0000
Total	**0.0000**	**0.0000**	**0.0000**	**0.0000**	**0.0000**	**0.0000**	**0.0000**	**0.0000**	**0.0000**	**0.0000**	**0.0000**	**0.0000**	**0.0000**	**0.0000**	**0.0000**	**0.0000**

Mitigated Construction On-Site

	ROG	NOx	CO	SO2	Fugitive PM10	Exhaust PM10	PM10 Total	Fugitive PM2.5	Exhaust PM2.5	PM2.5 Total	Bio- CO2	NBio- CO2	Total CO2	CH4	N2O	CO2e
Category	tons/yr										MT/yr					
Off-Road	4.7600e-003	0.0365	0.2669	3.9000e-004		5.8000e-004	5.8000e-004		5.8000e-004	5.8000e-004	0.0000	33.4153	33.4153	9.6200e-003	0.0000	33.6172
Total	**4.7600e-003**	**0.0365**	**0.2669**	**3.9000e-004**		**5.8000e-004**	**5.8000e-004**		**5.8000e-004**	**5.8000e-004**	**0.0000**	**33.4153**	**33.4153**	**9.6200e-003**	**0.0000**	**33.6172**

3.76 Year 4 Month 3 - 2023

Mitigated Construction Off-Site

	ROG	NOx	CO	SO2	Fugitive PM10	Exhaust PM10	PM10 Total	Fugitive PM2.5	Exhaust PM2.5	PM2.5 Total	Bio- CO2	NBio- CO2	Total CO2	CH4	N2O	CO2e
Category	tons/yr										MT/yr					
Hauling	0.0000	0.0000	0.0000	0.0000	0.0000	0.0000	0.0000	0.0000	0.0000	0.0000	0.0000	0.0000	0.0000	0.0000	0.0000	0.0000
Vendor	0.0000	0.0000	0.0000	0.0000	0.0000	0.0000	0.0000	0.0000	0.0000	0.0000	0.0000	0.0000	0.0000	0.0000	0.0000	0.0000
Worker	0.0000	0.0000	0.0000	0.0000	0.0000	0.0000	0.0000	0.0000	0.0000	0.0000	0.0000	0.0000	0.0000	0.0000	0.0000	0.0000
Total	**0.0000**	**0.0000**	**0.0000**	**0.0000**	**0.0000**	**0.0000**	**0.0000**	**0.0000**	**0.0000**	**0.0000**	**0.0000**	**0.0000**	**0.0000**	**0.0000**	**0.0000**	**0.0000**

3.77 Year 4 Month 4 - 2023

Unmitigated Construction On-Site

	ROG	NOx	CO	SO2	Fugitive PM10	Exhaust PM10	PM10 Total	Fugitive PM2.5	Exhaust PM2.5	PM2.5 Total	Bio- CO2	NBio- CO2	Total CO2	CH4	N2O	CO2e
Category	tons/yr										MT/yr					
Off-Road	0.0956	0.7641	0.7339	1.4400e-003		0.0352	0.0352		0.0330	0.0330	0.0000	121.7204	121.7204	0.0346	0.0000	122.4460
Total	**0.0956**	**0.7641**	**0.7339**	**1.4400e-003**		**0.0352**	**0.0352**		**0.0330**	**0.0330**	**0.0000**	**121.7204**	**121.7204**	**0.0346**	**0.0000**	**122.4460**

3.77 Year 4 Month 4 - 2023

Unmitigated Construction Off-Site

	ROG	NOx	CO	SO2	Fugitive PM10	Exhaust PM10	PM10 Total	Fugitive PM2.5	Exhaust PM2.5	PM2.5 Total	Bio- CO2	NBio- CO2	Total CO2	CH4	N2O	CO2e
Category	tons/yr										MT/yr					
Hauling	0.0000	0.0000	0.0000	0.0000	0.0000	0.0000	0.0000	0.0000	0.0000	0.0000	0.0000	0.0000	0.0000	0.0000	0.0000	0.0000
Vendor	0.0000	0.0000	0.0000	0.0000	0.0000	0.0000	0.0000	0.0000	0.0000	0.0000	0.0000	0.0000	0.0000	0.0000	0.0000	0.0000
Worker	0.0000	0.0000	0.0000	0.0000	0.0000	0.0000	0.0000	0.0000	0.0000	0.0000	0.0000	0.0000	0.0000	0.0000	0.0000	0.0000
Total	**0.0000**	**0.0000**	**0.0000**	**0.0000**	**0.0000**	**0.0000**	**0.0000**	**0.0000**	**0.0000**	**0.0000**	**0.0000**	**0.0000**	**0.0000**	**0.0000**	**0.0000**	**0.0000**

Mitigated Construction On-Site

	ROG	NOx	CO	SO2	Fugitive PM10	Exhaust PM10	PM10 Total	Fugitive PM2.5	Exhaust PM2.5	PM2.5 Total	Bio- CO2	NBio- CO2	Total CO2	CH4	N2O	CO2e
Category	tons/yr										MT/yr					
Off-Road	0.0195	0.2351	0.7791	1.4400e-003		2.0600e-003	2.0600e-003		2.0600e-003	2.0600e-003	0.0000	121.7202	121.7202	0.0346	0.0000	122.4459
Total	**0.0195**	**0.2351**	**0.7791**	**1.4400e-003**		**2.0600e-003**	**2.0600e-003**		**2.0600e-003**	**2.0600e-003**	**0.0000**	**121.7202**	**121.7202**	**0.0346**	**0.0000**	**122.4459**

3.77 Year 4 Month 4 - 2023

Mitigated Construction Off-Site

	ROG	NOx	CO	SO2	Fugitive PM10	Exhaust PM10	PM10 Total	Fugitive PM2.5	Exhaust PM2.5	PM2.5 Total	Bio- CO2	NBio- CO2	Total CO2	CH4	N2O	CO2e
Category	tons/yr										MT/yr					
Hauling	0.0000	0.0000	0.0000	0.0000	0.0000	0.0000	0.0000	0.0000	0.0000	0.0000	0.0000	0.0000	0.0000	0.0000	0.0000	0.0000
Vendor	0.0000	0.0000	0.0000	0.0000	0.0000	0.0000	0.0000	0.0000	0.0000	0.0000	0.0000	0.0000	0.0000	0.0000	0.0000	0.0000
Worker	0.0000	0.0000	0.0000	0.0000	0.0000	0.0000	0.0000	0.0000	0.0000	0.0000	0.0000	0.0000	0.0000	0.0000	0.0000	0.0000
Total	**0.0000**	**0.0000**	**0.0000**	**0.0000**	**0.0000**	**0.0000**	**0.0000**	**0.0000**	**0.0000**	**0.0000**	**0.0000**	**0.0000**	**0.0000**	**0.0000**	**0.0000**	**0.0000**

3.78 Year 4 Month 5 - 2023

Unmitigated Construction On-Site

	ROG	NOx	CO	SO2	Fugitive PM10	Exhaust PM10	PM10 Total	Fugitive PM2.5	Exhaust PM2.5	PM2.5 Total	Bio- CO2	NBio- CO2	Total CO2	CH4	N2O	CO2e
Category	tons/yr										MT/yr					
Off-Road	0.1121	0.8581	0.8445	1.6600e-003		0.0386	0.0386		0.0363	0.0363	0.0000	138.9279	138.9279	0.0378	0.0000	139.7224
Total	**0.1121**	**0.8581**	**0.8445**	**1.6600e-003**		**0.0386**	**0.0386**		**0.0363**	**0.0363**	**0.0000**	**138.9279**	**138.9279**	**0.0378**	**0.0000**	**139.7224**

3.78 Year 4 Month 5 - 2023

Unmitigated Construction Off-Site

	ROG	NOx	CO	SO2	Fugitive PM10	Exhaust PM10	PM10 Total	Fugitive PM2.5	Exhaust PM2.5	PM2.5 Total	Bio- CO2	NBio- CO2	Total CO2	CH4	N2O	CO2e
Category	tons/yr										MT/yr					
Hauling	0.0000	0.0000	0.0000	0.0000	0.0000	0.0000	0.0000	0.0000	0.0000	0.0000	0.0000	0.0000	0.0000	0.0000	0.0000	0.0000
Vendor	0.0000	0.0000	0.0000	0.0000	0.0000	0.0000	0.0000	0.0000	0.0000	0.0000	0.0000	0.0000	0.0000	0.0000	0.0000	0.0000
Worker	0.0000	0.0000	0.0000	0.0000	0.0000	0.0000	0.0000	0.0000	0.0000	0.0000	0.0000	0.0000	0.0000	0.0000	0.0000	0.0000
Total	**0.0000**	**0.0000**	**0.0000**	**0.0000**	**0.0000**	**0.0000**	**0.0000**	**0.0000**	**0.0000**	**0.0000**	**0.0000**	**0.0000**	**0.0000**	**0.0000**	**0.0000**	**0.0000**

Mitigated Construction On-Site

	ROG	NOx	CO	SO2	Fugitive PM10	Exhaust PM10	PM10 Total	Fugitive PM2.5	Exhaust PM2.5	PM2.5 Total	Bio- CO2	NBio- CO2	Total CO2	CH4	N2O	CO2e
Category	tons/yr										MT/yr					
Off-Road	0.0224	0.2884	0.8790	1.6600e-003		2.3000e-003	2.3000e-003		2.3000e-003	2.3000e-003	0.0000	138.9278	138.9278	0.0378	0.0000	139.7222
Total	**0.0224**	**0.2884**	**0.8790**	**1.6600e-003**		**2.3000e-003**	**2.3000e-003**		**2.3000e-003**	**2.3000e-003**	**0.0000**	**138.9278**	**138.9278**	**0.0378**	**0.0000**	**139.7222**

3.78 Year 4 Month 5 - 2023

Mitigated Construction Off-Site

	ROG	NOx	CO	SO2	Fugitive PM10	Exhaust PM10	PM10 Total	Fugitive PM2.5	Exhaust PM2.5	PM2.5 Total	Bio- CO2	NBio- CO2	Total CO2	CH4	N2O	CO2e
Category	tons/yr										MT/yr					
Hauling	0.0000	0.0000	0.0000	0.0000	0.0000	0.0000	0.0000	0.0000	0.0000	0.0000	0.0000	0.0000	0.0000	0.0000	0.0000	0.0000
Vendor	0.0000	0.0000	0.0000	0.0000	0.0000	0.0000	0.0000	0.0000	0.0000	0.0000	0.0000	0.0000	0.0000	0.0000	0.0000	0.0000
Worker	0.0000	0.0000	0.0000	0.0000	0.0000	0.0000	0.0000	0.0000	0.0000	0.0000	0.0000	0.0000	0.0000	0.0000	0.0000	0.0000
Total	**0.0000**	**0.0000**	**0.0000**	**0.0000**	**0.0000**	**0.0000**	**0.0000**	**0.0000**	**0.0000**	**0.0000**	**0.0000**	**0.0000**	**0.0000**	**0.0000**	**0.0000**	**0.0000**

3.79 Year 4 Month 6 - 2023

Unmitigated Construction On-Site

	ROG	NOx	CO	SO2	Fugitive PM10	Exhaust PM10	PM10 Total	Fugitive PM2.5	Exhaust PM2.5	PM2.5 Total	Bio- CO2	NBio- CO2	Total CO2	CH4	N2O	CO2e
Category	tons/yr										MT/yr					
Off-Road	0.1174	0.9180	0.8848	1.8000e-003		0.0414	0.0414		0.0388	0.0388	0.0000	151.8389	151.8389	0.0423	0.0000	152.7265
Total	**0.1174**	**0.9180**	**0.8848**	**1.8000e-003**		**0.0414**	**0.0414**		**0.0388**	**0.0388**	**0.0000**	**151.8389**	**151.8389**	**0.0423**	**0.0000**	**152.7265**

3.79 Year 4 Month 6 - 2023

Unmitigated Construction Off-Site

	ROG	NOx	CO	SO2	Fugitive PM10	Exhaust PM10	PM10 Total	Fugitive PM2.5	Exhaust PM2.5	PM2.5 Total	Bio- CO2	NBio- CO2	Total CO2	CH4	N2O	CO2e
Category	tons/yr										MT/yr					
Hauling	0.0000	0.0000	0.0000	0.0000	0.0000	0.0000	0.0000	0.0000	0.0000	0.0000	0.0000	0.0000	0.0000	0.0000	0.0000	0.0000
Vendor	0.0000	0.0000	0.0000	0.0000	0.0000	0.0000	0.0000	0.0000	0.0000	0.0000	0.0000	0.0000	0.0000	0.0000	0.0000	0.0000
Worker	0.0000	0.0000	0.0000	0.0000	0.0000	0.0000	0.0000	0.0000	0.0000	0.0000	0.0000	0.0000	0.0000	0.0000	0.0000	0.0000
Total	**0.0000**	**0.0000**	**0.0000**	**0.0000**	**0.0000**	**0.0000**	**0.0000**	**0.0000**	**0.0000**	**0.0000**	**0.0000**	**0.0000**	**0.0000**	**0.0000**	**0.0000**	**0.0000**

Mitigated Construction On-Site

	ROG	NOx	CO	SO2	Fugitive PM10	Exhaust PM10	PM10 Total	Fugitive PM2.5	Exhaust PM2.5	PM2.5 Total	Bio- CO2	NBio- CO2	Total CO2	CH4	N2O	CO2e
Category	tons/yr										MT/yr					
Off-Road	0.0244	0.3014	0.9463	1.8000e-003		2.5500e-003	2.5500e-003		2.5500e-003	2.5500e-003	0.0000	151.8387	151.8387	0.0423	0.0000	152.7264
Total	**0.0244**	**0.3014**	**0.9463**	**1.8000e-003**		**2.5500e-003**	**2.5500e-003**		**2.5500e-003**	**2.5500e-003**	**0.0000**	**151.8387**	**151.8387**	**0.0423**	**0.0000**	**152.7264**

3.79 Year 4 Month 6 - 2023

Mitigated Construction Off-Site

	ROG	NOx	CO	SO2	Fugitive PM10	Exhaust PM10	PM10 Total	Fugitive PM2.5	Exhaust PM2.5	PM2.5 Total	Bio- CO2	NBio- CO2	Total CO2	CH4	N2O	CO2e
Category	tons/yr										MT/yr					
Hauling	0.0000	0.0000	0.0000	0.0000	0.0000	0.0000	0.0000	0.0000	0.0000	0.0000	0.0000	0.0000	0.0000	0.0000	0.0000	0.0000
Vendor	0.0000	0.0000	0.0000	0.0000	0.0000	0.0000	0.0000	0.0000	0.0000	0.0000	0.0000	0.0000	0.0000	0.0000	0.0000	0.0000
Worker	0.0000	0.0000	0.0000	0.0000	0.0000	0.0000	0.0000	0.0000	0.0000	0.0000	0.0000	0.0000	0.0000	0.0000	0.0000	0.0000
Total	**0.0000**	**0.0000**	**0.0000**	**0.0000**	**0.0000**	**0.0000**	**0.0000**	**0.0000**	**0.0000**	**0.0000**	**0.0000**	**0.0000**	**0.0000**	**0.0000**	**0.0000**	**0.0000**

3.80 Year 4 Month 7 - 2023

Unmitigated Construction On-Site

	ROG	NOx	CO	SO2	Fugitive PM10	Exhaust PM10	PM10 Total	Fugitive PM2.5	Exhaust PM2.5	PM2.5 Total	Bio- CO2	NBio- CO2	Total CO2	CH4	N2O	CO2e
Category	tons/yr										MT/yr					
Off-Road	0.1105	0.8568	0.8338	1.6400e-003		0.0396	0.0396		0.0372	0.0372	0.0000	138.4999	138.4999	0.0384	0.0000	139.3067
Total	**0.1105**	**0.8568**	**0.8338**	**1.6400e-003**		**0.0396**	**0.0396**		**0.0372**	**0.0372**	**0.0000**	**138.4999**	**138.4999**	**0.0384**	**0.0000**	**139.3067**

3.80 Year 4 Month 7 - 2023

Unmitigated Construction Off-Site

	ROG	NOx	CO	SO2	Fugitive PM10	Exhaust PM10	PM10 Total	Fugitive PM2.5	Exhaust PM2.5	PM2.5 Total	Bio- CO2	NBio- CO2	Total CO2	CH4	N2O	CO2e
Category	tons/yr										MT/yr					
Hauling	0.0000	0.0000	0.0000	0.0000	0.0000	0.0000	0.0000	0.0000	0.0000	0.0000	0.0000	0.0000	0.0000	0.0000	0.0000	0.0000
Vendor	0.0000	0.0000	0.0000	0.0000	0.0000	0.0000	0.0000	0.0000	0.0000	0.0000	0.0000	0.0000	0.0000	0.0000	0.0000	0.0000
Worker	0.0000	0.0000	0.0000	0.0000	0.0000	0.0000	0.0000	0.0000	0.0000	0.0000	0.0000	0.0000	0.0000	0.0000	0.0000	0.0000
Total	**0.0000**	**0.0000**	**0.0000**	**0.0000**	**0.0000**	**0.0000**	**0.0000**	**0.0000**	**0.0000**	**0.0000**	**0.0000**	**0.0000**	**0.0000**	**0.0000**	**0.0000**	**0.0000**

Mitigated Construction On-Site

	ROG	NOx	CO	SO2	Fugitive PM10	Exhaust PM10	PM10 Total	Fugitive PM2.5	Exhaust PM2.5	PM2.5 Total	Bio- CO2	NBio- CO2	Total CO2	CH4	N2O	CO2e
Category	tons/yr										MT/yr					
Off-Road	0.0232	0.3074	0.8807	1.6400e-003		2.3400e-003	2.3400e-003		2.3400e-003	2.3400e-003	0.0000	138.4997	138.4997	0.0384	0.0000	139.3066
Total	**0.0232**	**0.3074**	**0.8807**	**1.6400e-003**		**2.3400e-003**	**2.3400e-003**		**2.3400e-003**	**2.3400e-003**	**0.0000**	**138.4997**	**138.4997**	**0.0384**	**0.0000**	**139.3066**

3.80 Year 4 Month 7 - 2023

Mitigated Construction Off-Site

	ROG	NOx	CO	SO2	Fugitive PM10	Exhaust PM10	PM10 Total	Fugitive PM2.5	Exhaust PM2.5	PM2.5 Total	Bio- CO2	NBio- CO2	Total CO2	CH4	N2O	CO2e
Category	tons/yr										MT/yr					
Hauling	0.0000	0.0000	0.0000	0.0000	0.0000	0.0000	0.0000	0.0000	0.0000	0.0000	0.0000	0.0000	0.0000	0.0000	0.0000	0.0000
Vendor	0.0000	0.0000	0.0000	0.0000	0.0000	0.0000	0.0000	0.0000	0.0000	0.0000	0.0000	0.0000	0.0000	0.0000	0.0000	0.0000
Worker	0.0000	0.0000	0.0000	0.0000	0.0000	0.0000	0.0000	0.0000	0.0000	0.0000	0.0000	0.0000	0.0000	0.0000	0.0000	0.0000
Total	**0.0000**	**0.0000**	**0.0000**	**0.0000**	**0.0000**	**0.0000**	**0.0000**	**0.0000**	**0.0000**	**0.0000**	**0.0000**	**0.0000**	**0.0000**	**0.0000**	**0.0000**	**0.0000**

3.81 Year 4 Month 8 - 2023

Unmitigated Construction On-Site

	ROG	NOx	CO	SO2	Fugitive PM10	Exhaust PM10	PM10 Total	Fugitive PM2.5	Exhaust PM2.5	PM2.5 Total	Bio- CO2	NBio- CO2	Total CO2	CH4	N2O	CO2e
Category	tons/yr										MT/yr					
Off-Road	0.1858	1.6865	1.3254	3.1600e-003		0.0735	0.0735		0.0683	0.0683	0.0000	272.1212	272.1212	0.0826	0.0000	273.8554
Total	**0.1858**	**1.6865**	**1.3254**	**3.1600e-003**		**0.0735**	**0.0735**		**0.0683**	**0.0683**	**0.0000**	**272.1212**	**272.1212**	**0.0826**	**0.0000**	**273.8554**

3.81 Year 4 Month 8 - 2023

Unmitigated Construction Off-Site

	ROG	NOx	CO	SO2	Fugitive PM10	Exhaust PM10	PM10 Total	Fugitive PM2.5	Exhaust PM2.5	PM2.5 Total	Bio- CO2	NBio- CO2	Total CO2	CH4	N2O	CO2e
Category	tons/yr										MT/yr					
Hauling	0.0000	0.0000	0.0000	0.0000	0.0000	0.0000	0.0000	0.0000	0.0000	0.0000	0.0000	0.0000	0.0000	0.0000	0.0000	0.0000
Vendor	0.0000	0.0000	0.0000	0.0000	0.0000	0.0000	0.0000	0.0000	0.0000	0.0000	0.0000	0.0000	0.0000	0.0000	0.0000	0.0000
Worker	0.0000	0.0000	0.0000	0.0000	0.0000	0.0000	0.0000	0.0000	0.0000	0.0000	0.0000	0.0000	0.0000	0.0000	0.0000	0.0000
Total	**0.0000**	**0.0000**	**0.0000**	**0.0000**	**0.0000**	**0.0000**	**0.0000**	**0.0000**	**0.0000**	**0.0000**	**0.0000**	**0.0000**	**0.0000**	**0.0000**	**0.0000**	**0.0000**

Mitigated Construction On-Site

	ROG	NOx	CO	SO2	Fugitive PM10	Exhaust PM10	PM10 Total	Fugitive PM2.5	Exhaust PM2.5	PM2.5 Total	Bio- CO2	NBio- CO2	Total CO2	CH4	N2O	CO2e
Category	tons/yr										MT/yr					
Off-Road	0.0420	0.3811	1.6504	3.1600e-003		4.8800e-003	4.8800e-003		4.8800e-003	4.8800e-003	0.0000	272.1209	272.1209	0.0826	0.0000	273.8551
Total	**0.0420**	**0.3811**	**1.6504**	**3.1600e-003**		**4.8800e-003**	**4.8800e-003**		**4.8800e-003**	**4.8800e-003**	**0.0000**	**272.1209**	**272.1209**	**0.0826**	**0.0000**	**273.8551**

3.81 Year 4 Month 8 - 2023

Mitigated Construction Off-Site

	ROG	NOx	CO	SO2	Fugitive PM10	Exhaust PM10	PM10 Total	Fugitive PM2.5	Exhaust PM2.5	PM2.5 Total	Bio- CO2	NBio- CO2	Total CO2	CH4	N2O	CO2e
Category	tons/yr										MT/yr					
Hauling	0.0000	0.0000	0.0000	0.0000	0.0000	0.0000	0.0000	0.0000	0.0000	0.0000	0.0000	0.0000	0.0000	0.0000	0.0000	0.0000
Vendor	0.0000	0.0000	0.0000	0.0000	0.0000	0.0000	0.0000	0.0000	0.0000	0.0000	0.0000	0.0000	0.0000	0.0000	0.0000	0.0000
Worker	0.0000	0.0000	0.0000	0.0000	0.0000	0.0000	0.0000	0.0000	0.0000	0.0000	0.0000	0.0000	0.0000	0.0000	0.0000	0.0000
Total	**0.0000**	**0.0000**	**0.0000**	**0.0000**	**0.0000**	**0.0000**	**0.0000**	**0.0000**	**0.0000**	**0.0000**	**0.0000**	**0.0000**	**0.0000**	**0.0000**	**0.0000**	**0.0000**

3.82 Year 4 Month 9 - 2023

Unmitigated Construction On-Site

	ROG	NOx	CO	SO2	Fugitive PM10	Exhaust PM10	PM10 Total	Fugitive PM2.5	Exhaust PM2.5	PM2.5 Total	Bio- CO2	NBio- CO2	Total CO2	CH4	N2O	CO2e
Category	tons/yr										MT/yr					
Off-Road	0.1733	1.5738	1.2357	2.9900e-003		0.0675	0.0675		0.0627	0.0627	0.0000	257.6494	257.6494	0.0781	0.0000	259.2895
Total	**0.1733**	**1.5738**	**1.2357**	**2.9900e-003**		**0.0675**	**0.0675**		**0.0627**	**0.0627**	**0.0000**	**257.6494**	**257.6494**	**0.0781**	**0.0000**	**259.2895**

3.82 Year 4 Month 9 - 2023

Unmitigated Construction Off-Site

	ROG	NOx	CO	SO2	Fugitive PM10	Exhaust PM10	PM10 Total	Fugitive PM2.5	Exhaust PM2.5	PM2.5 Total	Bio- CO2	NBio- CO2	Total CO2	CH4	N2O	CO2e
Category	tons/yr										MT/yr					
Hauling	0.0000	0.0000	0.0000	0.0000	0.0000	0.0000	0.0000	0.0000	0.0000	0.0000	0.0000	0.0000	0.0000	0.0000	0.0000	0.0000
Vendor	0.0000	0.0000	0.0000	0.0000	0.0000	0.0000	0.0000	0.0000	0.0000	0.0000	0.0000	0.0000	0.0000	0.0000	0.0000	0.0000
Worker	0.0000	0.0000	0.0000	0.0000	0.0000	0.0000	0.0000	0.0000	0.0000	0.0000	0.0000	0.0000	0.0000	0.0000	0.0000	0.0000
Total	**0.0000**	**0.0000**	**0.0000**	**0.0000**	**0.0000**	**0.0000**	**0.0000**	**0.0000**	**0.0000**	**0.0000**	**0.0000**	**0.0000**	**0.0000**	**0.0000**	**0.0000**	**0.0000**

Mitigated Construction On-Site

	ROG	NOx	CO	SO2	Fugitive PM10	Exhaust PM10	PM10 Total	Fugitive PM2.5	Exhaust PM2.5	PM2.5 Total	Bio- CO2	NBio- CO2	Total CO2	CH4	N2O	CO2e
Category	tons/yr										MT/yr					
Off-Road	0.0392	0.3388	1.5511	2.9900e-003		4.6200e-003	4.6200e-003		4.6200e-003	4.6200e-003	0.0000	257.6491	257.6491	0.0781	0.0000	259.2892
Total	**0.0392**	**0.3388**	**1.5511**	**2.9900e-003**		**4.6200e-003**	**4.6200e-003**		**4.6200e-003**	**4.6200e-003**	**0.0000**	**257.6491**	**257.6491**	**0.0781**	**0.0000**	**259.2892**

3.82 Year 4 Month 9 - 2023

Mitigated Construction Off-Site

	ROG	NOx	CO	SO2	Fugitive PM10	Exhaust PM10	PM10 Total	Fugitive PM2.5	Exhaust PM2.5	PM2.5 Total	Bio- CO2	NBio- CO2	Total CO2	CH4	N2O	CO2e
Category	tons/yr										MT/yr					
Hauling	0.0000	0.0000	0.0000	0.0000	0.0000	0.0000	0.0000	0.0000	0.0000	0.0000	0.0000	0.0000	0.0000	0.0000	0.0000	0.0000
Vendor	0.0000	0.0000	0.0000	0.0000	0.0000	0.0000	0.0000	0.0000	0.0000	0.0000	0.0000	0.0000	0.0000	0.0000	0.0000	0.0000
Worker	0.0000	0.0000	0.0000	0.0000	0.0000	0.0000	0.0000	0.0000	0.0000	0.0000	0.0000	0.0000	0.0000	0.0000	0.0000	0.0000
Total	**0.0000**	**0.0000**	**0.0000**	**0.0000**	**0.0000**	**0.0000**	**0.0000**	**0.0000**	**0.0000**	**0.0000**	**0.0000**	**0.0000**	**0.0000**	**0.0000**	**0.0000**	**0.0000**

3.83 Year 4 Month 10 - 2023

Unmitigated Construction On-Site

	ROG	NOx	CO	SO2	Fugitive PM10	Exhaust PM10	PM10 Total	Fugitive PM2.5	Exhaust PM2.5	PM2.5 Total	Bio- CO2	NBio- CO2	Total CO2	CH4	N2O	CO2e
Category	tons/yr										MT/yr					
Off-Road	0.1363	1.2768	0.9543	2.3700e-003		0.0540	0.0540		0.0502	0.0502	0.0000	204.8925	204.8925	0.0626	0.0000	206.2072
Total	**0.1363**	**1.2768**	**0.9543**	**2.3700e-003**		**0.0540**	**0.0540**		**0.0502**	**0.0502**	**0.0000**	**204.8925**	**204.8925**	**0.0626**	**0.0000**	**206.2072**

3.83 Year 4 Month 10 - 2023

Unmitigated Construction Off-Site

	ROG	NOx	CO	SO2	Fugitive PM10	Exhaust PM10	PM10 Total	Fugitive PM2.5	Exhaust PM2.5	PM2.5 Total	Bio- CO2	NBio- CO2	Total CO2	CH4	N2O	CO2e
Category	tons/yr										MT/yr					
Hauling	0.0000	0.0000	0.0000	0.0000	0.0000	0.0000	0.0000	0.0000	0.0000	0.0000	0.0000	0.0000	0.0000	0.0000	0.0000	0.0000
Vendor	0.0000	0.0000	0.0000	0.0000	0.0000	0.0000	0.0000	0.0000	0.0000	0.0000	0.0000	0.0000	0.0000	0.0000	0.0000	0.0000
Worker	0.0000	0.0000	0.0000	0.0000	0.0000	0.0000	0.0000	0.0000	0.0000	0.0000	0.0000	0.0000	0.0000	0.0000	0.0000	0.0000
Total	**0.0000**	**0.0000**	**0.0000**	**0.0000**	**0.0000**	**0.0000**	**0.0000**	**0.0000**	**0.0000**	**0.0000**	**0.0000**	**0.0000**	**0.0000**	**0.0000**	**0.0000**	**0.0000**

Mitigated Construction On-Site

	ROG	NOx	CO	SO2	Fugitive PM10	Exhaust PM10	PM10 Total	Fugitive PM2.5	Exhaust PM2.5	PM2.5 Total	Bio- CO2	NBio- CO2	Total CO2	CH4	N2O	CO2e
Category	tons/yr										MT/yr					
Off-Road	0.0311	0.2625	1.2227	2.3700e-003		3.6800e-003	3.6800e-003		3.6800e-003	3.6800e-003	0.0000	204.8923	204.8923	0.0626	0.0000	206.2070
Total	**0.0311**	**0.2625**	**1.2227**	**2.3700e-003**		**3.6800e-003**	**3.6800e-003**		**3.6800e-003**	**3.6800e-003**	**0.0000**	**204.8923**	**204.8923**	**0.0626**	**0.0000**	**206.2070**

3.83 Year 4 Month 10 - 2023

Mitigated Construction Off-Site

	ROG	NOx	CO	SO2	Fugitive PM10	Exhaust PM10	PM10 Total	Fugitive PM2.5	Exhaust PM2.5	PM2.5 Total	Bio- CO2	NBio- CO2	Total CO2	CH4	N2O	CO2e
Category	tons/yr										MT/yr					
Hauling	0.0000	0.0000	0.0000	0.0000	0.0000	0.0000	0.0000	0.0000	0.0000	0.0000	0.0000	0.0000	0.0000	0.0000	0.0000	0.0000
Vendor	0.0000	0.0000	0.0000	0.0000	0.0000	0.0000	0.0000	0.0000	0.0000	0.0000	0.0000	0.0000	0.0000	0.0000	0.0000	0.0000
Worker	0.0000	0.0000	0.0000	0.0000	0.0000	0.0000	0.0000	0.0000	0.0000	0.0000	0.0000	0.0000	0.0000	0.0000	0.0000	0.0000
Total	**0.0000**	**0.0000**	**0.0000**	**0.0000**	**0.0000**	**0.0000**	**0.0000**	**0.0000**	**0.0000**	**0.0000**	**0.0000**	**0.0000**	**0.0000**	**0.0000**	**0.0000**	**0.0000**

3.84 Year 4 Month 11 - 2023

Unmitigated Construction On-Site

	ROG	NOx	CO	SO2	Fugitive PM10	Exhaust PM10	PM10 Total	Fugitive PM2.5	Exhaust PM2.5	PM2.5 Total	Bio- CO2	NBio- CO2	Total CO2	CH4	N2O	CO2e
Category	tons/yr										MT/yr					
Off-Road	0.0546	0.4138	0.4228	7.5000e-004		0.0191	0.0191		0.0180	0.0180	0.0000	62.6578	62.6578	0.0165	0.0000	63.0050
Total	**0.0546**	**0.4138**	**0.4228**	**7.5000e-004**		**0.0191**	**0.0191**		**0.0180**	**0.0180**	**0.0000**	**62.6578**	**62.6578**	**0.0165**	**0.0000**	**63.0050**

3.84 Year 4 Month 11 - 2023

Unmitigated Construction Off-Site

	ROG	NOx	CO	SO2	Fugitive PM10	Exhaust PM10	PM10 Total	Fugitive PM2.5	Exhaust PM2.5	PM2.5 Total	Bio- CO2	NBio- CO2	Total CO2	CH4	N2O	CO2e
Category	tons/yr										MT/yr					
Hauling	0.0000	0.0000	0.0000	0.0000	0.0000	0.0000	0.0000	0.0000	0.0000	0.0000	0.0000	0.0000	0.0000	0.0000	0.0000	0.0000
Vendor	0.0000	0.0000	0.0000	0.0000	0.0000	0.0000	0.0000	0.0000	0.0000	0.0000	0.0000	0.0000	0.0000	0.0000	0.0000	0.0000
Worker	0.0000	0.0000	0.0000	0.0000	0.0000	0.0000	0.0000	0.0000	0.0000	0.0000	0.0000	0.0000	0.0000	0.0000	0.0000	0.0000
Total	**0.0000**	**0.0000**	**0.0000**	**0.0000**	**0.0000**	**0.0000**	**0.0000**	**0.0000**	**0.0000**	**0.0000**	**0.0000**	**0.0000**	**0.0000**	**0.0000**	**0.0000**	**0.0000**

Mitigated Construction On-Site

	ROG	NOx	CO	SO2	Fugitive PM10	Exhaust PM10	PM10 Total	Fugitive PM2.5	Exhaust PM2.5	PM2.5 Total	Bio- CO2	NBio- CO2	Total CO2	CH4	N2O	CO2e
Category	tons/yr										MT/yr					
Off-Road	0.0107	0.1721	0.4023	7.5000e-004		9.7000e-004	9.7000e-004		9.7000e-004	9.7000e-004	0.0000	62.6577	62.6577	0.0165	0.0000	63.0049
Total	**0.0107**	**0.1721**	**0.4023**	**7.5000e-004**		**9.7000e-004**	**9.7000e-004**		**9.7000e-004**	**9.7000e-004**	**0.0000**	**62.6577**	**62.6577**	**0.0165**	**0.0000**	**63.0049**

3.84 Year 4 Month 11 - 2023

Mitigated Construction Off-Site

	ROG	NOx	CO	SO2	Fugitive PM10	Exhaust PM10	PM10 Total	Fugitive PM2.5	Exhaust PM2.5	PM2.5 Total	Bio- CO2	NBio- CO2	Total CO2	CH4	N2O	CO2e
Category	tons/yr										MT/yr					
Hauling	0.0000	0.0000	0.0000	0.0000	0.0000	0.0000	0.0000	0.0000	0.0000	0.0000	0.0000	0.0000	0.0000	0.0000	0.0000	0.0000
Vendor	0.0000	0.0000	0.0000	0.0000	0.0000	0.0000	0.0000	0.0000	0.0000	0.0000	0.0000	0.0000	0.0000	0.0000	0.0000	0.0000
Worker	0.0000	0.0000	0.0000	0.0000	0.0000	0.0000	0.0000	0.0000	0.0000	0.0000	0.0000	0.0000	0.0000	0.0000	0.0000	0.0000
Total	**0.0000**	**0.0000**	**0.0000**	**0.0000**	**0.0000**	**0.0000**	**0.0000**	**0.0000**	**0.0000**	**0.0000**	**0.0000**	**0.0000**	**0.0000**	**0.0000**	**0.0000**	**0.0000**

3.85 Year 4 Month 12 - 2023

Unmitigated Construction On-Site

	ROG	NOx	CO	SO2	Fugitive PM10	Exhaust PM10	PM10 Total	Fugitive PM2.5	Exhaust PM2.5	PM2.5 Total	Bio- CO2	NBio- CO2	Total CO2	CH4	N2O	CO2e
Category	tons/yr										MT/yr					
Off-Road	0.0326	0.2458	0.2478	4.5000e-004		0.0115	0.0115		0.0108	0.0108	0.0000	37.9381	37.9381	0.0104	0.0000	38.1573
Total	**0.0326**	**0.2458**	**0.2478**	**4.5000e-004**		**0.0115**	**0.0115**		**0.0108**	**0.0108**	**0.0000**	**37.9381**	**37.9381**	**0.0104**	**0.0000**	**38.1573**

3.85 Year 4 Month 12 - 2023

Unmitigated Construction Off-Site

	ROG	NOx	CO	SO2	Fugitive PM10	Exhaust PM10	PM10 Total	Fugitive PM2.5	Exhaust PM2.5	PM2.5 Total	Bio- CO2	NBio- CO2	Total CO2	CH4	N2O	CO2e
Category	tons/yr										MT/yr					
Hauling	0.0000	0.0000	0.0000	0.0000	0.0000	0.0000	0.0000	0.0000	0.0000	0.0000	0.0000	0.0000	0.0000	0.0000	0.0000	0.0000
Vendor	0.0000	0.0000	0.0000	0.0000	0.0000	0.0000	0.0000	0.0000	0.0000	0.0000	0.0000	0.0000	0.0000	0.0000	0.0000	0.0000
Worker	0.0000	0.0000	0.0000	0.0000	0.0000	0.0000	0.0000	0.0000	0.0000	0.0000	0.0000	0.0000	0.0000	0.0000	0.0000	0.0000
Total	**0.0000**	**0.0000**	**0.0000**	**0.0000**	**0.0000**	**0.0000**	**0.0000**	**0.0000**	**0.0000**	**0.0000**	**0.0000**	**0.0000**	**0.0000**	**0.0000**	**0.0000**	**0.0000**

Mitigated Construction On-Site

	ROG	NOx	CO	SO2	Fugitive PM10	Exhaust PM10	PM10 Total	Fugitive PM2.5	Exhaust PM2.5	PM2.5 Total	Bio- CO2	NBio- CO2	Total CO2	CH4	N2O	CO2e
Category	tons/yr										MT/yr					
Off-Road	7.3100e-003	0.1306	0.2413	4.5000e-004		6.2000e-004	6.2000e-004		6.2000e-004	6.2000e-004	0.0000	37.9381	37.9381	0.0104	0.0000	38.1573
Total	**7.3100e-003**	**0.1306**	**0.2413**	**4.5000e-004**		**6.2000e-004**	**6.2000e-004**		**6.2000e-004**	**6.2000e-004**	**0.0000**	**37.9381**	**37.9381**	**0.0104**	**0.0000**	**38.1573**

3.85 Year 4 Month 12 - 2023

Mitigated Construction Off-Site

	ROG	NOx	CO	SO2	Fugitive PM10	Exhaust PM10	PM10 Total	Fugitive PM2.5	Exhaust PM2.5	PM2.5 Total	Bio- CO2	NBio- CO2	Total CO2	CH4	N2O	CO2e
Category	tons/yr										MT/yr					
Hauling	0.0000	0.0000	0.0000	0.0000	0.0000	0.0000	0.0000	0.0000	0.0000	0.0000	0.0000	0.0000	0.0000	0.0000	0.0000	0.0000
Vendor	0.0000	0.0000	0.0000	0.0000	0.0000	0.0000	0.0000	0.0000	0.0000	0.0000	0.0000	0.0000	0.0000	0.0000	0.0000	0.0000
Worker	0.0000	0.0000	0.0000	0.0000	0.0000	0.0000	0.0000	0.0000	0.0000	0.0000	0.0000	0.0000	0.0000	0.0000	0.0000	0.0000
Total	**0.0000**	**0.0000**	**0.0000**	**0.0000**	**0.0000**	**0.0000**	**0.0000**	**0.0000**	**0.0000**	**0.0000**	**0.0000**	**0.0000**	**0.0000**	**0.0000**	**0.0000**	**0.0000**

4.0 Operational Detail - Mobile

4.1 Mitigation Measures Mobile

	ROG	NOx	CO	SO2	Fugitive PM10	Exhaust PM10	PM10 Total	Fugitive PM2.5	Exhaust PM2.5	PM2.5 Total	Bio- CO2	NBio- CO2	Total CO2	CH4	N2O	CO2e
Category	tons/yr										MT/yr					
Mitigated	0.0000	0.0000	0.0000	0.0000	0.0000	0.0000	0.0000	0.0000	0.0000	0.0000	0.0000	0.0000	0.0000	0.0000	0.0000	0.0000
Unmitigated	0.0000	0.0000	0.0000	0.0000	0.0000	0.0000	0.0000	0.0000	0.0000	0.0000	0.0000	0.0000	0.0000	0.0000	0.0000	0.0000

4.2 Trip Summary Information

	Average Daily Trip Rate			Unmitigated	Mitigated
Land Use	Weekday	Saturday	Sunday	Annual VMT	Annual VMT
User Defined Industrial	0.00	0.00	0.00		
Total	0.00	0.00	0.00		

4.3 Trip Type Information

	Miles			Trip %			Trip Purpose %		
Land Use	H-W or C-W	H-S or C-C	H-O or C-NW	H-W or C-W	H-S or C-C	H-O or C-NW	Primary	Diverted	Pass-by
User Defined Industrial	8.80	4.60	4.60	0.00	0.00	0.00	0	0	0

LDA	LDT1	LDT2	MDV	LHD1	LHD2	MHD	HHD	OBUS	UBUS	MCY	SBUS	MH
0.491782	0.035344	0.208299	0.151084	0.049421	0.007284	0.022101	0.017711	0.002208	0.002109	0.008228	0.001403	0.003026

4.4 Fleet Mix

5.0 Energy Detail

Historical Energy Use: N

5.1 Mitigation Measures Energy

	ROG	NOx	CO	SO2	Fugitive PM10	Exhaust PM10	PM10 Total	Fugitive PM2.5	Exhaust PM2.5	PM2.5 Total	Bio- CO2	NBio- CO2	Total CO2	CH4	N2O	CO2e
Category	tons/yr										MT/yr					
NaturalGas Mitigated	0.0000	0.0000	0.0000	0.0000		0.0000	0.0000		0.0000	0.0000	0.0000	0.0000	0.0000	0.0000	0.0000	0.0000
NaturalGas Unmitigated	0.0000	0.0000	0.0000	0.0000		0.0000	0.0000		0.0000	0.0000	0.0000	0.0000	0.0000	0.0000	0.0000	0.0000
Electricity Mitigated						0.0000	0.0000		0.0000	0.0000	0.0000	0.0000	0.0000	0.0000	0.0000	0.0000
Electricity Unmitigated						0.0000	0.0000		0.0000	0.0000	0.0000	0.0000	0.0000	0.0000	0.0000	0.0000

5.2 Energy by Land Use - NaturalGas

Unmitigated

	NaturalGas Use	ROG	NOx	CO	SO2	Fugitive PM10	Exhaust PM10	PM10 Total	Fugitive PM2.5	Exhaust PM2.5	PM2.5 Total	Bio- CO2	NBio- CO2	Total CO2	CH4	N2O	CO2e
Land Use	kBTU/yr	tons/yr										MT/yr					
User Defined Industrial	0	0.0000	0.0000	0.0000	0.0000		0.0000	0.0000		0.0000	0.0000	0.0000	0.0000	0.0000	0.0000	0.0000	0.0000
Total		**0.0000**	**0.0000**	**0.0000**	**0.0000**		**0.0000**	**0.0000**		**0.0000**	**0.0000**	**0.0000**	**0.0000**	**0.0000**	**0.0000**	**0.0000**	**0.0000**

5.2 Energy by Land Use - NaturalGas

Mitigated

	NaturalGas Use	ROG	NOx	CO	SO2	Fugitive PM10	Exhaust PM10	PM10 Total	Fugitive PM2.5	Exhaust PM2.5	PM2.5 Total	Bio- CO2	NBio- CO2	Total CO2	CH4	N2O	CO2e
Land Use	kBTU/yr	tons/yr										MT/yr					
User Defined Industrial	0	0.0000	0.0000	0.0000	0.0000		0.0000	0.0000		0.0000	0.0000	0.0000	0.0000	0.0000	0.0000	0.0000	0.0000
Total		**0.0000**	**0.0000**	**0.0000**	**0.0000**		**0.0000**	**0.0000**		**0.0000**	**0.0000**	**0.0000**	**0.0000**	**0.0000**	**0.0000**	**0.0000**	**0.0000**

5.3 Energy by Land Use - Electricity

Unmitigated

	Electricity Use	Total CO2	CH4	N2O	CO2e
Land Use	kWh/yr	MT/yr			
User Defined Industrial	0	0.0000	0.0000	0.0000	0.0000
Total		**0.0000**	**0.0000**	**0.0000**	**0.0000**

5.3 Energy by Land Use - Electricity

Mitigated

	Electricity Use	Total CO2	CH4	N2O	CO2e
Land Use	kWh/yr	MT/yr			
User Defined Industrial	0	0.0000	0.0000	0.0000	0.0000
Total		**0.0000**	**0.0000**	**0.0000**	**0.0000**

6.0 Area Detail

6.1 Mitigation Measures Area

	ROG	NOx	CO	SO2	Fugitive PM10	Exhaust PM10	PM10 Total	Fugitive PM2.5	Exhaust PM2.5	PM2.5 Total	Bio- CO2	NBio- CO2	Total CO2	CH4	N2O	CO2e
Category	tons/yr										MT/yr					
Mitigated	0.0000					0.0000	0.0000		0.0000	0.0000	0.0000	0.0000	0.0000	0.0000	0.0000	0.0000
Unmitigated	0.0000					0.0000	0.0000		0.0000	0.0000	0.0000	0.0000	0.0000	0.0000	0.0000	0.0000

6.2 Area by SubCategory

Unmitigated

	ROG	NOx	CO	SO2	Fugitive PM10	Exhaust PM10	PM10 Total	Fugitive PM2.5	Exhaust PM2.5	PM2.5 Total	Bio- CO2	NBio- CO2	Total CO2	CH4	N2O	CO2e
SubCategory	tons/yr										MT/yr					
Architectural Coating	0.0000					0.0000	0.0000		0.0000	0.0000	0.0000	0.0000	0.0000	0.0000	0.0000	0.0000
Total	**0.0000**					**0.0000**	**0.0000**		**0.0000**	**0.0000**	**0.0000**	**0.0000**	**0.0000**	**0.0000**	**0.0000**	**0.0000**

Mitigated

	ROG	NOx	CO	SO2	Fugitive PM10	Exhaust PM10	PM10 Total	Fugitive PM2.5	Exhaust PM2.5	PM2.5 Total	Bio- CO2	NBio- CO2	Total CO2	CH4	N2O	CO2e
SubCategory	tons/yr										MT/yr					
Architectural Coating	0.0000					0.0000	0.0000		0.0000	0.0000	0.0000	0.0000	0.0000	0.0000	0.0000	0.0000
Total	**0.0000**					**0.0000**	**0.0000**		**0.0000**	**0.0000**	**0.0000**	**0.0000**	**0.0000**	**0.0000**	**0.0000**	**0.0000**

7.0 Water Detail

7.1 Mitigation Measures Water

	Total CO2	CH4	N2O	CO2e
Category	MT/yr			
Unmitigated	0.0000	0.0000	0.0000	0.0000
Mitigated	0.0000	0.0000	0.0000	0.0000

7.2 Water by Land Use

Unmitigated

	Indoor/Outdoor Use	Total CO2	CH4	N2O	CO2e
Land Use	Mgal	MT/yr			
User Defined Industrial	0 / 0	0.0000	0.0000	0.0000	0.0000
Total		**0.0000**	**0.0000**	**0.0000**	**0.0000**

7.2 Water by Land Use

Mitigated

	Indoor/Outdoor Use	Total CO2	CH4	N2O	CO2e
Land Use	Mgal	MT/yr			
User Defined Industrial	0 / 0	0.0000	0.0000	0.0000	0.0000
Total		**0.0000**	**0.0000**	**0.0000**	**0.0000**

8.0 Waste Detail

8.1 Mitigation Measures Waste

Category/Year

	Total CO2	CH4	N2O	CO2e
	MT/yr			
Mitigated	0.0000	0.0000	0.0000	0.0000
Unmitigated	0.0000	0.0000	0.0000	0.0000

8.2 Waste by Land Use

Unmitigated

	Waste Disposed	Total CO2	CH4	N2O	CO2e
Land Use	tons	MT/yr			
User Defined Industrial	0	0.0000	0.0000	0.0000	0.0000
Total		**0.0000**	**0.0000**	**0.0000**	**0.0000**

Data retrieval failed for the subreport, 'subWasteDetail', located at: subWasteDetail. Please check the log files for more information.

9.0 Operational Offroad

Equipment Type	Number	Hours/Day	Days/Year	Horse Power	Load Factor	Fuel Type

10.0 Vegetation

AERA - Santa Barbara - Cat Canyon Construction Equipment Emission Calculations Years 5 thru 11

Santa Barbara-North of Santa Ynez County, Annual

1.0 Project Characteristics

1.1 Land Usage

Land Uses	Size	Metric	Lot Acreage	Floor Surface Area	Population
User Defined Industrial	2,100.00	User Defined Unit	2,100.00	0.00	0

1.2 Other Project Characteristics

Urbanization	Rural	**Wind Speed (m/s)**	3.1	**Precipitation Freq (Days)**	37
Climate Zone	4			**Operational Year**	2035
Utility Company	Pacific Gas & Electric Company				
CO2 Intensity (lb/MWhr)	641.35	**CH4 Intensity (lb/MWhr)**	0.029	**N2O Intensity (lb/MWhr)**	0.006

1.3 User Entered Comments & Non-Default Data

Project Characteristics -

Land Use - The project will be located in the East Cat Canyon oil field on approximately 2,100 acres.

Construction Phase - Anticipated Construction Schedule Provided by the Project Applicant.

Off-road Equipment - Units and Hours/day provided by Project Applicant. HP were adjusted whenever data was available for the size of the equipment provided by the applicant.

Off-road Equipment - Units and Hours/day provided by Project Applicant. HP were adjusted whenever data was available for the size of the equipment provided by the applicant.

Off-road Equipment - Units and Hours/day provided by Project Applicant. HP were adjusted whenever data was available for the size of the equipment provided by the applicant.

Off-road Equipment - Units and Hours/day provided by Project Applicant. HP were adjusted whenever data was available for the size of the equipment provided by the applicant.

Off-road Equipment - Units and Hours/day provided by Project Applicant. HP were adjusted whenever data was available for the size of the equipment provided by the applicant.

Off-road Equipment - Units and Hours/day provided by Project Applicant. HP were adjusted whenever data was available for the size of the equipment provided by the applicant.

Off-road Equipment - Units and Hours/day provided by Project Applicant. HP were adjusted whenever data was available for the size of the equipment provided by the applicant.

Off-road Equipment - Units and Hours/day provided by Project Applicant. HP were adjusted whenever data was available for the size of the equipment provided by the applicant.

Off-road Equipment - Units and Hours/day provided by Project Applicant. HP were adjusted whenever data was available for the size of the equipment provided by the applicant.

Off-road Equipment - Units and Hours/day provided by Project Applicant. HP were adjusted whenever data was available for the size of the equipment provided by the applicant.

Off-road Equipment - Units and Hours/day provided by Project Applicant. HP were adjusted whenever data was available for the size of the equipment provided by the applicant.

Off-road Equipment - Units and Hours/day provided by Project Applicant. HP were adjusted whenever data was available for the size of the equipment provided by the applicant.

Off-road Equipment - Units and Hours/day provided by Project Applicant. HP were adjusted whenever data was available for the size of the equipment provided by the applicant.

Off-road Equipment - Units and Hours/day provided by Project Applicant. HP were adjusted whenever data was available for the size of the equipment provided by the applicant.

Off-road Equipment - Units and Hours/day provided by Project Applicant. HP were adjusted whenever data was available for the size of the equipment provided by the applicant.

Off-road Equipment - Units and Hours/day provided by Project Applicant. HP were adjusted whenever data was available for the size of the equipment provided by the applicant.

Off-road Equipment - Units and Hours/day provided by Project Applicant. HP were adjusted whenever data was available for the size of the equipment provided by the applicant.

Off-road Equipment - Units and Hours/day provided by Project Applicant. HP were adjusted whenever data was available for the size of the equipment provided by the applicant.

Off-road Equipment - Units and Hours/day provided by Project Applicant. HP were adjusted whenever data was available for the size of the equipment provided by the applicant.

Off-road Equipment - Units and Hours/day provided by Project Applicant. HP were adjusted whenever data was available for the size of the equipment provided by the applicant.

Off-road Equipment - Units and Hours/day provided by Project Applicant. HP were adjusted whenever data was available for the size of the equipment provided by the applicant.

Off-road Equipment - Units and Hours/day provided by Project Applicant. HP were adjusted whenever data was available for the size of the equipment provided by the applicant.

Off-road Equipment - Units and Hours/day provided by Project Applicant. HP were adjusted whenever data was available for the size of the equipment provided by the applicant.

Off-road Equipment - Units and Hours/day provided by Project Applicant. HP were adjusted whenever data was available for the size of the equipment provided

by the applicant.
Off-road Equipment - Units and Hours/day provided by Project Applicant. HP were adjusted whenever data was available for the size of the equipment provided by the applicant.

Off-road Equipment - Units and Hours/day provided by Project Applicant. HP were adjusted whenever data was available for the size of the equipment provided by the applicant.

Off-road Equipment - Units and Hours/day provided by Project Applicant. HP were adjusted whenever data was available for the size of the equipment provided by the applicant.

Off-road Equipment - Units and Hours/day provided by Project Applicant. HP were adjusted whenever data was available for the size of the equipment provided by the applicant.

Off-road Equipment - Units and Hours/day provided by Project Applicant. HP were adjusted whenever data was available for the size of the equipment provided by the applicant.

Off-road Equipment - Units and Hours/day provided by Project Applicant. HP were adjusted whenever data was available for the size of the equipment provided by the applicant.

Off-road Equipment - Units and Hours/day provided by Project Applicant. HP were adjusted whenever data was available for the size of the equipment provided by the applicant.

Off-road Equipment - Units and Hours/day provided by Project Applicant. HP were adjusted whenever data was available for the size of the equipment provided by the applicant.

Off-road Equipment - Units and Hours/day provided by Project Applicant. HP were adjusted whenever data was available for the size of the equipment provided by the applicant.

Off-road Equipment - Units and Hours/day provided by Project Applicant. HP were adjusted whenever data was available for the size of the equipment provided by the applicant.

Off-road Equipment - Units and Hours/day provided by Project Applicant. HP were adjusted whenever data was available for the size of the equipment provided by the applicant.

Off-road Equipment - Units and Hours/day provided by Project Applicant. HP were adjusted whenever data was available for the size of the equipment provided by the applicant.

Off-road Equipment - Units and Hours/day provided by Project Applicant. HP were adjusted whenever data was available for the size of the equipment provided by the applicant.

Off-road Equipment - Units and Hours/day provided by Project Applicant. HP were adjusted whenever data was available for the size of the equipment provided by the applicant.

Off-road Equipment - Units and Hours/day provided by Project Applicant. HP were adjusted whenever data was available for the size of the equipment provided by the applicant.

Off-road Equipment - Units and Hours/day provided by Project Applicant. HP were adjusted whenever data was available for the size of the equipment provided by the applicant.

Off-road Equipment - Units and Hours/day provided by Project Applicant. HP were adjusted whenever data was available for the size of the equipment provided by the applicant.

Off-road Equipment - Units and Hours/day provided by Project Applicant. HP were adjusted whenever data was available for the size of the equipment provided by the applicant.

Off-road Equipment - Units and Hours/day provided by Project Applicant. HP were adjusted whenever data was available for the size of the equipment provided by the applicant.

Off-road Equipment - Units and Hours/day provided by Project Applicant. HP were adjusted whenever data was available for the size of the equipment provided by the applicant.

Off-road Equipment - Units and Hours/day provided by Project Applicant. HP were adjusted whenever data was available for the size of the equipment provided by the applicant.

Off-road Equipment - Units and Hours/day provided by Project Applicant. HP were adjusted whenever data was available for the size of the equipment provided by the applicant.

Off-road Equipment - Units and Hours/day provided by Project Applicant. HP were adjusted whenever data was available for the size of the equipment provided by the applicant.

Off-road Equipment - Units and Hours/day provided by Project Applicant. HP were adjusted whenever data was available for the size of the equipment provided by the applicant.

Off-road Equipment - Units and Hours/day provided by Project Applicant. HP were adjusted whenever data was available for the size of the equipment provided by the applicant.

Off-road Equipment - Units and Hours/day provided by Project Applicant. HP were adjusted whenever data was available for the size of the equipment provided by the applicant.

Off-road Equipment - Units and Hours/day provided by Project Applicant. HP were adjusted whenever data was available for the size of the equipment provided by the applicant.

Off-road Equipment - Units and Hours/day provided by Project Applicant. HP were adjusted whenever data was available for the size of the equipment provided by the applicant.

Off-road Equipment - Units and Hours/day provided by Project Applicant. HP were adjusted whenever data was available for the size of the equipment provided by the applicant.

Off-road Equipment - Units and Hours/day provided by Project Applicant. HP were adjusted whenever data was available for the size of the equipment provided by the applicant.

Off-road Equipment - Units and Hours/day provided by Project Applicant. HP were adjusted whenever data was available for the size of the equipment provided by the applicant.

Off-road Equipment - Units and Hours/day provided by Project Applicant. HP were adjusted whenever data was available for the size of the equipment provided by the applicant.

Off-road Equipment - Units and Hours/day provided by Project Applicant. HP were adjusted whenever data was available for the size of the equipment provided by the applicant.

Off-road Equipment - Units and Hours/day provided by Project Applicant. HP were adjusted whenever data was available for the size of the equipment provided by the applicant.

Off-road Equipment - Units and Hours/day provided by Project Applicant. HP were adjusted whenever data was available for the size of the equipment provided by the applicant.

Off-road Equipment - Units and Hours/day provided by Project Applicant. HP were adjusted whenever data was available for the size of the equipment provided by the applicant.

Off-road Equipment - Units and Hours/day provided by Project Applicant. HP were adjusted whenever data was available for the size of the equipment provided by the applicant.

Off-road Equipment - Units and Hours/day provided by Project Applicant. HP were adjusted whenever data was available for the size of the equipment provided by the applicant.

Off-road Equipment - Units and Hours/day provided by Project Applicant. HP were adjusted whenever data was available for the size of the equipment provided by the applicant.

Off-road Equipment - Units and Hours/day provided by Project Applicant. HP were adjusted whenever data was available for the size of the equipment provided by the applicant.

Off-road Equipment - Units and Hours/day provided by Project Applicant. HP were adjusted whenever data was available for the size of the equipment provided by the applicant.

Off-road Equipment - Units and Hours/day provided by Project Applicant. HP were adjusted whenever data was available for the size of the equipment provided by the applicant.

Off-road Equipment - Units and Hours/day provided by Project Applicant. HP were adjusted whenever data was available for the size of the equipment provided by the applicant.

Off-road Equipment - Units and Hours/day provided by Project Applicant. HP were adjusted whenever data was available for the size of the equipment provided by the applicant.

Off-road Equipment - Units and Hours/day provided by Project Applicant. HP were adjusted whenever data was available for the size of the equipment provided by the applicant.

Off-road Equipment - Units and Hours/day provided by Project Applicant. HP were adjusted whenever data was available for the size of the equipment provided by the applicant.

Off-road Equipment - Units and Hours/day provided by Project Applicant. HP were adjusted whenever data was available for the size of the equipment provided by the applicant.

Off-road Equipment - Units and Hours/day provided by Project Applicant. HP were adjusted whenever data was available for the size of the equipment provided by the applicant.

Off-road Equipment - Units and Hours/day provided by Project Applicant. HP were adjusted whenever data was available for the size of the equipment provided by the applicant.

Off-road Equipment - Units and Hours/day provided by Project Applicant. HP were adjusted whenever data was available for the size of the equipment provided by the applicant.

Off-road Equipment - Units and Hours/day provided by Project Applicant. HP were adjusted whenever data was available for the size of the equipment provided by the applicant.

Off-road Equipment - Units and Hours/day provided by Project Applicant. HP were adjusted whenever data was available for the size of the equipment provided by the applicant.

Off-road Equipment - Units and Hours/day provided by Project Applicant. HP were adjusted whenever data was available for the size of the equipment provided by the applicant.

Off-road Equipment - Units and Hours/day provided by Project Applicant. HP were adjusted whenever data was available for the size of the equipment provided by the applicant.

Off-road Equipment - Units and Hours/day provided by Project Applicant. HP were adjusted whenever data was available for the size of the equipment provided by the applicant.

Off-road Equipment - Units and Hours/day provided by Project Applicant. HP were adjusted whenever data was available for the size of the equipment provided by the applicant.

Off-road Equipment - Units and Hours/day provided by Project Applicant. HP were adjusted whenever data was available for the size of the equipment provided

by the applicant.

Off-road Equipment - Units and Hours/day provided by Project Applicant. HP were adjusted whenever data was available for the size of the equipment provided by the applicant.

Trips and VMT - Employee Trips are included in the offsite calculations.

On-road Fugitive Dust -

Vehicle Trips - Construction Run Only

Vechicle Emission Factors -

Vechicle Emission Factors -

Vechicle Emission Factors -

Road Dust -

Consumer Products - Construction Run Only

Landscape Equipment - Construction Run Only

Construction Off-road Equipment Mitigation - Using Tier 4 Engines to Mitigate Construction Emissions

Table Name	Column Name	Default Value	New Value
tblConstEquipMitigation	NumberOfEquipmentMitigated	0.00	20.00
tblConstEquipMitigation	NumberOfEquipmentMitigated	0.00	17.00
tblConstEquipMitigation	NumberOfEquipmentMitigated	0.00	105.00
tblConstEquipMitigation	NumberOfEquipmentMitigated	0.00	184.00
tblConstEquipMitigation	NumberOfEquipmentMitigated	0.00	24.00
tblConstEquipMitigation	NumberOfEquipmentMitigated	0.00	41.00
tblConstEquipMitigation	NumberOfEquipmentMitigated	0.00	31.00
tblConstEquipMitigation	NumberOfEquipmentMitigated	0.00	439.00
tblConstEquipMitigation	NumberOfEquipmentMitigated	0.00	26.00
tblConstEquipMitigation	NumberOfEquipmentMitigated	0.00	24.00
tblConstEquipMitigation	NumberOfEquipmentMitigated	0.00	12.00
tblConstEquipMitigation	NumberOfEquipmentMitigated	0.00	29.00
tblConstEquipMitigation	NumberOfEquipmentMitigated	0.00	132.00
tblConstEquipMitigation	Tier	No Change	Tier 4 Final

tblConstEquipMitigation	Tier	No Change	Tier 4 Final
tblConstEquipMitigation	Tier	No Change	Tier 4 Final
tblConstEquipMitigation	Tier	No Change	Tier 4 Final
tblConstEquipMitigation	Tier	No Change	Tier 4 Final
tblConstEquipMitigation	Tier	No Change	Tier 4 Final
tblConstEquipMitigation	Tier	No Change	Tier 4 Final
tblConstEquipMitigation	Tier	No Change	Tier 4 Final
tblConstEquipMitigation	Tier	No Change	Tier 4 Final
tblConstEquipMitigation	Tier	No Change	Tier 4 Final
tblConstEquipMitigation	Tier	No Change	Tier 4 Final
tblConstEquipMitigation	Tier	No Change	Tier 4 Final
tblConstEquipMitigation	Tier	No Change	Tier 4 Final
tblConstructionPhase	NumDays	155,000.00	27.00
tblConstructionPhase	NumDays	155,000.00	27.00
tblConstructionPhase	NumDays	155,000.00	26.00
tblConstructionPhase	NumDays	155,000.00	26.00
tblConstructionPhase	NumDays	155,000.00	27.00
tblConstructionPhase	NumDays	155,000.00	24.00
tblConstructionPhase	NumDays	155,000.00	26.00
tblConstructionPhase	NumDays	155,000.00	26.00
tblConstructionPhase	NumDays	155,000.00	27.00
tblConstructionPhase	NumDays	155,000.00	25.00
tblConstructionPhase	NumDays	155,000.00	27.00
tblConstructionPhase	NumDays	155,000.00	24.00
tblConstructionPhase	NumDays	155,000.00	26.00
tblConstructionPhase	NumDays	155,000.00	26.00
tblConstructionPhase	NumDays	155,000.00	27.00
tblConstructionPhase	NumDays	155,000.00	25.00

tblConstructionPhase	NumDays	155,000.00	27.00
tblConstructionPhase	NumDays	155,000.00	27.00
tblConstructionPhase	NumDays	155,000.00	24.00
tblConstructionPhase	NumDays	155,000.00	26.00
tblConstructionPhase	NumDays	155,000.00	26.00
tblConstructionPhase	NumDays	155,000.00	26.00
tblConstructionPhase	NumDays	155,000.00	26.00
tblConstructionPhase	NumDays	155,000.00	26.00
tblConstructionPhase	NumDays	155,000.00	27.00
tblConstructionPhase	NumDays	155,000.00	26.00
tblConstructionPhase	NumDays	155,000.00	26.00
tblConstructionPhase	NumDays	155,000.00	27.00
tblConstructionPhase	NumDays	155,000.00	25.00
tblConstructionPhase	NumDays	155,000.00	27.00
tblConstructionPhase	NumDays	155,000.00	26.00
tblConstructionPhase	NumDays	155,000.00	24.00
tblConstructionPhase	NumDays	155,000.00	27.00
tblConstructionPhase	NumDays	155,000.00	26.00
tblConstructionPhase	NumDays	155,000.00	26.00
tblConstructionPhase	NumDays	155,000.00	26.00
tblConstructionPhase	NumDays	155,000.00	26.00
tblConstructionPhase	NumDays	155,000.00	27.00
tblConstructionPhase	NumDays	155,000.00	26.00
tblConstructionPhase	NumDays	155,000.00	26.00
tblConstructionPhase	NumDays	155,000.00	26.00
tblConstructionPhase	NumDays	155,000.00	26.00
tblConstructionPhase	NumDays	155,000.00	27.00
tblConstructionPhase	NumDays	155,000.00	26.00

tblConstructionPhase	NumDays	155,000.00	27.00
tblConstructionPhase	NumDays	155,000.00	24.00
tblConstructionPhase	NumDays	155,000.00	27.00
tblConstructionPhase	NumDays	155,000.00	25.00
tblConstructionPhase	NumDays	155,000.00	27.00
tblConstructionPhase	NumDays	155,000.00	26.00
tblConstructionPhase	NumDays	155,000.00	26.00
tblConstructionPhase	NumDays	155,000.00	27.00
tblConstructionPhase	NumDays	155,000.00	26.00
tblConstructionPhase	NumDays	155,000.00	26.00
tblConstructionPhase	NumDays	155,000.00	26.00
tblConstructionPhase	NumDays	155,000.00	25.00
tblConstructionPhase	NumDays	155,000.00	26.00
tblConstructionPhase	NumDays	155,000.00	27.00
tblConstructionPhase	NumDays	155,000.00	24.00
tblConstructionPhase	NumDays	155,000.00	27.00
tblConstructionPhase	NumDays	155,000.00	25.00
tblConstructionPhase	NumDays	155,000.00	27.00
tblConstructionPhase	NumDays	155,000.00	26.00
tblConstructionPhase	NumDays	155,000.00	26.00
tblConstructionPhase	NumDays	155,000.00	27.00
tblConstructionPhase	NumDays	155,000.00	25.00
tblConstructionPhase	NumDays	155,000.00	27.00
tblConstructionPhase	NumDays	155,000.00	27.00
tblConstructionPhase	NumDays	155,000.00	26.00
tblConstructionPhase	NumDays	155,000.00	26.00
tblConstructionPhase	NumDays	155,000.00	27.00
tblConstructionPhase	NumDays	155,000.00	24.00

tblConstructionPhase	NumDays	155,000.00	26.00
tblConstructionPhase	NumDays	155,000.00	26.00
tblConstructionPhase	NumDays	155,000.00	27.00
tblConstructionPhase	NumDays	155,000.00	25.00
tblConstructionPhase	NumDays	155,000.00	27.00
tblConstructionPhase	NumDays	155,000.00	27.00
tblConstructionPhase	NumDays	155,000.00	27.00
tblConstructionPhase	NumDays	155,000.00	25.00
tblConstructionPhase	NumDays	155,000.00	27.00
tblConstructionPhase	NumDays	155,000.00	26.00
tblConstructionPhase	NumDays	155,000.00	26.00
tblConstructionPhase	NumDays	155,000.00	25.00
tblConstructionPhase	NumDaysWeek	5.00	6.00
tblConstructionPhase	NumDaysWeek	5.00	6.00
tblConstructionPhase	NumDaysWeek	5.00	6.00
tblConstructionPhase	NumDaysWeek	5.00	6.00
tblConstructionPhase	NumDaysWeek	5.00	6.00
tblConstructionPhase	NumDaysWeek	5.00	6.00
tblConstructionPhase	NumDaysWeek	5.00	6.00
tblConstructionPhase	NumDaysWeek	5.00	6.00
tblConstructionPhase	NumDaysWeek	5.00	6.00
tblConstructionPhase	NumDaysWeek	5.00	6.00
tblConstructionPhase	NumDaysWeek	5.00	6.00
tblConstructionPhase	NumDaysWeek	5.00	6.00
tblConstructionPhase	NumDaysWeek	5.00	6.00
tblConstructionPhase	NumDaysWeek	5.00	6.00
tblConstructionPhase	NumDaysWeek	5.00	6.00

tblConstructionPhase	NumDaysWeek	5.00	6.00
tblConstructionPhase	NumDaysWeek	5.00	6.00
tblConstructionPhase	NumDaysWeek	5.00	6.00
tblConstructionPhase	NumDaysWeek	5.00	6.00
tblConstructionPhase	NumDaysWeek	5.00	6.00
tblConstructionPhase	NumDaysWeek	5.00	6.00
tblConstructionPhase	NumDaysWeek	5.00	6.00
tblConstructionPhase	NumDaysWeek	5.00	6.00
tblConstructionPhase	NumDaysWeek	5.00	6.00
tblConstructionPhase	NumDaysWeek	5.00	6.00
tblConstructionPhase	NumDaysWeek	5.00	6.00
tblConstructionPhase	NumDaysWeek	5.00	6.00
tblConstructionPhase	NumDaysWeek	5.00	6.00
tblConstructionPhase	NumDaysWeek	5.00	6.00
tblConstructionPhase	NumDaysWeek	5.00	6.00
tblConstructionPhase	NumDaysWeek	5.00	6.00
tblConstructionPhase	NumDaysWeek	5.00	6.00
tblConstructionPhase	NumDaysWeek	5.00	6.00
tblConstructionPhase	NumDaysWeek	5.00	6.00
tblConstructionPhase	NumDaysWeek	5.00	6.00
tblConstructionPhase	NumDaysWeek	5.00	6.00
tblConstructionPhase	NumDaysWeek	5.00	6.00
tblConstructionPhase	NumDaysWeek	5.00	6.00
tblConstructionPhase	NumDaysWeek	5.00	6.00
tblConstructionPhase	NumDaysWeek	5.00	6.00
tblConstructionPhase	NumDaysWeek	5.00	6.00

tblConstructionPhase	NumDaysWeek	5.00	6.00
tblConstructionPhase	NumDaysWeek	5.00	6.00
tblConstructionPhase	NumDaysWeek	5.00	6.00
tblConstructionPhase	NumDaysWeek	5.00	6.00
tblConstructionPhase	NumDaysWeek	5.00	6.00
tblConstructionPhase	NumDaysWeek	5.00	6.00
tblConstructionPhase	NumDaysWeek	5.00	6.00
tblConstructionPhase	NumDaysWeek	5.00	6.00
tblConstructionPhase	NumDaysWeek	5.00	6.00
tblConstructionPhase	NumDaysWeek	5.00	6.00
tblConstructionPhase	NumDaysWeek	5.00	6.00
tblConstructionPhase	NumDaysWeek	5.00	6.00
tblConstructionPhase	NumDaysWeek	5.00	6.00
tblConstructionPhase	NumDaysWeek	5.00	6.00
tblConstructionPhase	NumDaysWeek	5.00	6.00
tblConstructionPhase	NumDaysWeek	5.00	6.00
tblConstructionPhase	NumDaysWeek	5.00	6.00
tblConstructionPhase	NumDaysWeek	5.00	6.00
tblConstructionPhase	NumDaysWeek	5.00	6.00
tblConstructionPhase	NumDaysWeek	5.00	6.00
tblConstructionPhase	NumDaysWeek	5.00	6.00
tblConstructionPhase	NumDaysWeek	5.00	6.00
tblConstructionPhase	NumDaysWeek	5.00	6.00
tblConstructionPhase	NumDaysWeek	5.00	6.00
tblConstructionPhase	NumDaysWeek	5.00	6.00
tblConstructionPhase	NumDaysWeek	5.00	6.00

tblConstructionPhase	NumDaysWeek	5.00	6.00
tblConstructionPhase	NumDaysWeek	5.00	6.00
tblConstructionPhase	NumDaysWeek	5.00	6.00
tblConstructionPhase	NumDaysWeek	5.00	6.00
tblConstructionPhase	NumDaysWeek	5.00	6.00
tblConstructionPhase	NumDaysWeek	5.00	6.00
tblConstructionPhase	NumDaysWeek	5.00	6.00
tblConstructionPhase	NumDaysWeek	5.00	6.00
tblConstructionPhase	NumDaysWeek	5.00	6.00
tblConstructionPhase	NumDaysWeek	5.00	6.00
tblConstructionPhase	NumDaysWeek	5.00	6.00
tblConstructionPhase	PhaseEndDate	3/29/2024	3/30/2024
tblConstructionPhase	PhaseEndDate	3/30/2028	3/31/2028
tblConstructionPhase	PhaseStartDate	8/31/2025	9/1/2025
tblConstructionPhase	PhaseStartDate	11/30/2025	12/1/2025
tblConstructionPhase	PhaseStartDate	2/29/2024	3/1/2024
tblConstructionPhase	PhaseStartDate	5/31/2026	6/1/2026
tblConstructionPhase	PhaseStartDate	1/31/2027	2/1/2027
tblConstructionPhase	PhaseStartDate	2/28/2027	3/1/2027
tblConstructionPhase	PhaseStartDate	3/31/2024	4/1/2024
tblConstructionPhase	PhaseStartDate	10/31/2027	11/1/2027
tblConstructionPhase	PhaseStartDate	2/29/2028	3/1/2028
tblConstructionPhase	PhaseStartDate	4/30/2028	5/1/2028
tblConstructionPhase	PhaseStartDate	12/31/2028	1/1/2029
tblConstructionPhase	PhaseStartDate	6/30/2024	7/1/2024
tblConstructionPhase	PhaseStartDate	9/30/2029	10/1/2029
tblConstructionPhase	PhaseStartDate	3/31/2030	4/1/2030

tblConstructionPhase	PhaseStartDate	6/30/2030	7/1/2030
tblLandUse	LotAcreage	0.00	2,100.00
tblOffRoadEquipment	HorsePower	226.00	62.00
tblOffRoadEquipment	HorsePower	226.00	62.00
tblOffRoadEquipment	HorsePower	226.00	62.00
tblOffRoadEquipment	HorsePower	226.00	62.00
tblOffRoadEquipment	HorsePower	226.00	150.00
tblOffRoadEquipment	HorsePower	226.00	62.00
tblOffRoadEquipment	HorsePower	226.00	150.00
tblOffRoadEquipment	HorsePower	226.00	62.00
tblOffRoadEquipment	HorsePower	226.00	150.00
tblOffRoadEquipment	HorsePower	226.00	62.00
tblOffRoadEquipment	HorsePower	226.00	150.00
tblOffRoadEquipment	HorsePower	226.00	62.00
tblOffRoadEquipment	HorsePower	226.00	150.00
tblOffRoadEquipment	HorsePower	226.00	62.00
tblOffRoadEquipment	HorsePower	226.00	150.00
tblOffRoadEquipment	HorsePower	226.00	62.00
tblOffRoadEquipment	HorsePower	226.00	150.00
tblOffRoadEquipment	HorsePower	226.00	62.00
tblOffRoadEquipment	HorsePower	226.00	150.00
tblOffRoadEquipment	HorsePower	89.00	73.00
tblOffRoadEquipment	HorsePower	89.00	73.00
tblOffRoadEquipment	HorsePower	89.00	73.00
tblOffRoadEquipment	HorsePower	89.00	73.00
tblOffRoadEquipment	HorsePower	89.00	73.00
tblOffRoadEquipment	HorsePower	89.00	73.00
tblOffRoadEquipment	HorsePower	89.00	73.00

tblOffRoadEquipment	HorsePower	89.00	73.00
tblOffRoadEquipment	HorsePower	89.00	73.00
tblOffRoadEquipment	HorsePower	89.00	73.00
tblOffRoadEquipment	HorsePower	89.00	73.00
tblOffRoadEquipment	HorsePower	89.00	73.00
tblOffRoadEquipment	HorsePower	84.00	18.00
tblOffRoadEquipment	HorsePower	84.00	18.00
tblOffRoadEquipment	HorsePower	84.00	18.00
tblOffRoadEquipment	HorsePower	84.00	18.00
tblOffRoadEquipment	HorsePower	84.00	18.00
tblOffRoadEquipment	HorsePower	84.00	18.00
tblOffRoadEquipment	HorsePower	84.00	18.00
tblOffRoadEquipment	HorsePower	84.00	18.00
tblOffRoadEquipment	HorsePower	84.00	18.00
tblOffRoadEquipment	HorsePower	84.00	18.00
tblOffRoadEquipment	HorsePower	84.00	18.00
tblOffRoadEquipment	HorsePower	84.00	18.00
tblOffRoadEquipment	HorsePower	97.00	67.00
tblOffRoadEquipment	HorsePower	97.00	67.00
tblOffRoadEquipment	HorsePower	97.00	67.00
tblOffRoadEquipment	HorsePower	97.00	67.00
tblOffRoadEquipment	HorsePower	97.00	67.00
tblOffRoadEquipment	HorsePower	97.00	67.00
tblOffRoadEquipment	HorsePower	97.00	67.00
tblOffRoadEquipment	HorsePower	97.00	67.00
tblOffRoadEquipment	HorsePower	97.00	67.00
tblOffRoadEquipment	HorsePower	97.00	67.00

tblOffRoadEquipment	HorsePower	97.00	67.00
tblOffRoadEquipment	HorsePower	97.00	67.00
tblOffRoadEquipment	HorsePower	97.00	67.00
tblOffRoadEquipment	HorsePower	97.00	67.00
tblOffRoadEquipment	HorsePower	97.00	67.00
tblOffRoadEquipment	HorsePower	97.00	67.00
tblOffRoadEquipment	HorsePower	46.00	48.00
tblOffRoadEquipment	HorsePower	46.00	48.00
tblOffRoadEquipment	HorsePower	46.00	42.00
tblOffRoadEquipment	HorsePower	46.00	48.00
tblOffRoadEquipment	HorsePower	46.00	48.00
tblOffRoadEquipment	HorsePower	46.00	48.00
tblOffRoadEquipment	HorsePower	46.00	42.00
tblOffRoadEquipment	HorsePower	46.00	42.00
tblOffRoadEquipment	HorsePower	46.00	42.00
tblOffRoadEquipment	HorsePower	46.00	42.00
tblOffRoadEquipment	HorsePower	46.00	42.00
tblOffRoadEquipment	HorsePower	46.00	48.00
tblOffRoadEquipment	HorsePower	46.00	42.00
tblOffRoadEquipment	HorsePower	46.00	42.00
tblOffRoadEquipment	HorsePower	46.00	42.00
tblOffRoadEquipment	HorsePower	46.00	42.00
tblOffRoadEquipment	HorsePower	46.00	48.00
tblOffRoadEquipment	HorsePower	46.00	42.00
tblOffRoadEquipment	HorsePower	46.00	48.00
tblOffRoadEquipment	HorsePower	46.00	42.00
tblOffRoadEquipment	HorsePower	46.00	48.00
tblOffRoadEquipment	HorsePower	46.00	42.00

tblOffRoadEquipment	HorsePower	46.00	42.00
tblOffRoadEquipment	HorsePower	46.00	42.00
tblOffRoadEquipment	HorsePower	46.00	42.00
tblOffRoadEquipment	HorsePower	46.00	42.00
tblOffRoadEquipment	HorsePower	46.00	42.00
tblOffRoadEquipment	HorsePower	46.00	42.00
tblOffRoadEquipment	HorsePower	46.00	42.00
tblOffRoadEquipment	HorsePower	46.00	48.00
tblOffRoadEquipment	HorsePower	46.00	42.00
tblOffRoadEquipment	HorsePower	46.00	42.00
tblOffRoadEquipment	HorsePower	46.00	42.00
tblOffRoadEquipment	HorsePower	46.00	42.00
tblOffRoadEquipment	HorsePower	46.00	42.00
tblOffRoadEquipment	HorsePower	46.00	42.00
tblOffRoadEquipment	HorsePower	46.00	42.00
tblOffRoadEquipment	HorsePower	46.00	42.00
tblOffRoadEquipment	HorsePower	46.00	48.00
tblOffRoadEquipment	HorsePower	46.00	42.00
tblOffRoadEquipment	HorsePower	46.00	42.00
tblOffRoadEquipment	HorsePower	46.00	48.00
tblOffRoadEquipment	HorsePower	46.00	42.00
tblOffRoadEquipment	HorsePower	62.00	60.00
tblOffRoadEquipment	HorsePower	62.00	24.00
tblOffRoadEquipment	HorsePower	62.00	60.00
tblOffRoadEquipment	HorsePower	62.00	24.00
tblOffRoadEquipment	HorsePower	62.00	60.00
tblOffRoadEquipment	HorsePower	62.00	24.00
tblOffRoadEquipment	HorsePower	62.00	60.00
tblOffRoadEquipment	HorsePower	62.00	24.00

tblOffRoadEquipment	HorsePower	62.00	60.00
tblOffRoadEquipment	HorsePower	62.00	24.00
tblOffRoadEquipment	HorsePower	62.00	60.00
tblOffRoadEquipment	HorsePower	62.00	24.00
tblOffRoadEquipment	HorsePower	62.00	60.00
tblOffRoadEquipment	HorsePower	62.00	24.00
tblOffRoadEquipment	HorsePower	62.00	60.00
tblOffRoadEquipment	HorsePower	62.00	24.00
tblOffRoadEquipment	HorsePower	62.00	60.00
tblOffRoadEquipment	HorsePower	62.00	24.00
tblOffRoadEquipment	HorsePower	62.00	60.00
tblOffRoadEquipment	HorsePower	62.00	24.00
tblOffRoadEquipment	HorsePower	78.00	50.00
tblOffRoadEquipment	HorsePower	78.00	50.00
tblOffRoadEquipment	HorsePower	78.00	50.00
tblOffRoadEquipment	HorsePower	78.00	50.00
tblOffRoadEquipment	HorsePower	78.00	50.00
tblOffRoadEquipment	HorsePower	78.00	50.00
tblOffRoadEquipment	HorsePower	78.00	50.00
tblOffRoadEquipment	HorsePower	78.00	50.00
tblOffRoadEquipment	HorsePower	78.00	50.00
tblOffRoadEquipment	HorsePower	78.00	50.00
tblOffRoadEquipment	HorsePower	78.00	50.00
tblOffRoadEquipment	HorsePower	208.00	232.00
tblOffRoadEquipment	HorsePower	208.00	585.00
tblOffRoadEquipment	HorsePower	208.00	207.00
tblOffRoadEquipment	HorsePower	208.00	232.00

tblOffRoadEquipment	HorsePower	208.00	585.00
tblOffRoadEquipment	HorsePower	208.00	207.00
tblOffRoadEquipment	HorsePower	208.00	232.00
tblOffRoadEquipment	HorsePower	208.00	585.00
tblOffRoadEquipment	HorsePower	208.00	207.00
tblOffRoadEquipment	HorsePower	208.00	232.00
tblOffRoadEquipment	HorsePower	208.00	585.00
tblOffRoadEquipment	HorsePower	208.00	207.00
tblOffRoadEquipment	HorsePower	208.00	232.00
tblOffRoadEquipment	HorsePower	208.00	585.00
tblOffRoadEquipment	HorsePower	208.00	207.00
tblOffRoadEquipment	HorsePower	208.00	232.00
tblOffRoadEquipment	HorsePower	208.00	232.00
tblOffRoadEquipment	HorsePower	208.00	232.00
tblOffRoadEquipment	HorsePower	208.00	585.00
tblOffRoadEquipment	HorsePower	208.00	207.00
tblOffRoadEquipment	HorsePower	208.00	232.00
tblOffRoadEquipment	HorsePower	208.00	585.00
tblOffRoadEquipment	HorsePower	208.00	207.00
tblOffRoadEquipment	HorsePower	208.00	232.00
tblOffRoadEquipment	HorsePower	208.00	585.00
tblOffRoadEquipment	HorsePower	208.00	207.00
tblOffRoadEquipment	HorsePower	208.00	232.00
tblOffRoadEquipment	HorsePower	208.00	585.00
tblOffRoadEquipment	HorsePower	208.00	207.00

tblOffRoadEquipment	HorsePower	208.00	232.00
tblOffRoadEquipment	HorsePower	208.00	585.00
tblOffRoadEquipment	HorsePower	208.00	207.00
tblOffRoadEquipment	HorsePower	208.00	232.00
tblOffRoadEquipment	HorsePower	208.00	585.00
tblOffRoadEquipment	HorsePower	208.00	207.00
tblOffRoadEquipment	HorsePower	208.00	232.00
tblOffRoadEquipment	HorsePower	208.00	585.00
tblOffRoadEquipment	HorsePower	208.00	207.00
tblOffRoadEquipment	HorsePower	208.00	232.00
tblOffRoadEquipment	HorsePower	208.00	585.00
tblOffRoadEquipment	HorsePower	208.00	207.00
tblOffRoadEquipment	HorsePower	208.00	232.00
tblOffRoadEquipment	HorsePower	208.00	232.00
tblOffRoadEquipment	HorsePower	208.00	232.00
tblOffRoadEquipment	HorsePower	208.00	232.00
tblOffRoadEquipment	HorsePower	208.00	585.00
tblOffRoadEquipment	HorsePower	208.00	207.00
tblOffRoadEquipment	HorsePower	208.00	232.00
tblOffRoadEquipment	HorsePower	208.00	232.00
tblOffRoadEquipment	HorsePower	208.00	232.00
tblOffRoadEquipment	HorsePower	208.00	232.00
tblOffRoadEquipment	HorsePower	208.00	232.00
tblOffRoadEquipment	HorsePower	208.00	585.00
tblOffRoadEquipment	HorsePower	208.00	207.00
tblOffRoadEquipment	HorsePower	208.00	232.00
tblOffRoadEquipment	HorsePower	208.00	585.00
tblOffRoadEquipment	HorsePower	208.00	207.00

tblOffRoadEquipment	HorsePower	208.00	232.00
tblOffRoadEquipment	HorsePower	208.00	585.00
tblOffRoadEquipment	HorsePower	208.00	207.00
tblOffRoadEquipment	HorsePower	208.00	232.00
tblOffRoadEquipment	HorsePower	208.00	585.00
tblOffRoadEquipment	HorsePower	208.00	207.00
tblOffRoadEquipment	HorsePower	174.00	259.00
tblOffRoadEquipment	HorsePower	174.00	259.00
tblOffRoadEquipment	HorsePower	174.00	259.00
tblOffRoadEquipment	HorsePower	174.00	259.00
tblOffRoadEquipment	HorsePower	174.00	259.00
tblOffRoadEquipment	HorsePower	174.00	259.00
tblOffRoadEquipment	HorsePower	174.00	259.00
tblOffRoadEquipment	HorsePower	174.00	259.00
tblOffRoadEquipment	HorsePower	174.00	259.00
tblOffRoadEquipment	HorsePower	174.00	259.00
tblOffRoadEquipment	HorsePower	174.00	259.00
tblOffRoadEquipment	HorsePower	174.00	259.00
tblOffRoadEquipment	HorsePower	174.00	259.00
tblOffRoadEquipment	HorsePower	174.00	259.00
tblOffRoadEquipment	HorsePower	174.00	259.00
tblOffRoadEquipment	HorsePower	174.00	259.00
tblOffRoadEquipment	HorsePower	174.00	259.00
tblOffRoadEquipment	HorsePower	171.00	407.00
tblOffRoadEquipment	HorsePower	171.00	180.00
tblOffRoadEquipment	HorsePower	171.00	210.00

tblOffRoadEquipment	HorsePower	171.00	50.00
tblOffRoadEquipment	HorsePower	171.00	130.00
tblOffRoadEquipment	HorsePower	171.00	273.00
tblOffRoadEquipment	HorsePower	171.00	407.00
tblOffRoadEquipment	HorsePower	171.00	180.00
tblOffRoadEquipment	HorsePower	171.00	210.00
tblOffRoadEquipment	HorsePower	171.00	50.00
tblOffRoadEquipment	HorsePower	171.00	130.00
tblOffRoadEquipment	HorsePower	171.00	273.00
tblOffRoadEquipment	HorsePower	171.00	407.00
tblOffRoadEquipment	HorsePower	171.00	180.00
tblOffRoadEquipment	HorsePower	171.00	210.00
tblOffRoadEquipment	HorsePower	171.00	50.00
tblOffRoadEquipment	HorsePower	171.00	130.00
tblOffRoadEquipment	HorsePower	171.00	273.00
tblOffRoadEquipment	HorsePower	171.00	407.00
tblOffRoadEquipment	HorsePower	171.00	180.00
tblOffRoadEquipment	HorsePower	171.00	210.00
tblOffRoadEquipment	HorsePower	171.00	50.00
tblOffRoadEquipment	HorsePower	171.00	130.00
tblOffRoadEquipment	HorsePower	171.00	273.00
tblOffRoadEquipment	HorsePower	171.00	210.00
tblOffRoadEquipment	HorsePower	171.00	180.00
tblOffRoadEquipment	HorsePower	171.00	210.00
tblOffRoadEquipment	HorsePower	171.00	180.00
tblOffRoadEquipment	HorsePower	171.00	407.00
tblOffRoadEquipment	HorsePower	171.00	180.00
tblOffRoadEquipment	HorsePower	171.00	210.00

tblOffRoadEquipment	HorsePower	171.00	50.00
tblOffRoadEquipment	HorsePower	171.00	130.00
tblOffRoadEquipment	HorsePower	171.00	273.00
tblOffRoadEquipment	HorsePower	171.00	130.00
tblOffRoadEquipment	HorsePower	171.00	180.00
tblOffRoadEquipment	HorsePower	171.00	130.00
tblOffRoadEquipment	HorsePower	171.00	180.00
tblOffRoadEquipment	HorsePower	171.00	130.00
tblOffRoadEquipment	HorsePower	171.00	180.00
tblOffRoadEquipment	HorsePower	171.00	130.00
tblOffRoadEquipment	HorsePower	171.00	180.00
tblOffRoadEquipment	HorsePower	171.00	130.00
tblOffRoadEquipment	HorsePower	171.00	180.00
tblOffRoadEquipment	HorsePower	171.00	407.00
tblOffRoadEquipment	HorsePower	171.00	180.00
tblOffRoadEquipment	HorsePower	171.00	210.00
tblOffRoadEquipment	HorsePower	171.00	50.00
tblOffRoadEquipment	HorsePower	171.00	130.00
tblOffRoadEquipment	HorsePower	171.00	305.00
tblOffRoadEquipment	HorsePower	171.00	273.00
tblOffRoadEquipment	HorsePower	171.00	130.00
tblOffRoadEquipment	HorsePower	171.00	180.00
tblOffRoadEquipment	HorsePower	171.00	130.00
tblOffRoadEquipment	HorsePower	171.00	180.00
tblOffRoadEquipment	HorsePower	171.00	130.00
tblOffRoadEquipment	HorsePower	171.00	180.00
tblOffRoadEquipment	HorsePower	171.00	407.00
tblOffRoadEquipment	HorsePower	171.00	130.00

tblOffRoadEquipment	HorsePower	171.00	407.00
tblOffRoadEquipment	HorsePower	171.00	130.00
tblOffRoadEquipment	HorsePower	171.00	407.00
tblOffRoadEquipment	HorsePower	171.00	180.00
tblOffRoadEquipment	HorsePower	171.00	210.00
tblOffRoadEquipment	HorsePower	171.00	50.00
tblOffRoadEquipment	HorsePower	171.00	130.00
tblOffRoadEquipment	HorsePower	171.00	305.00
tblOffRoadEquipment	HorsePower	171.00	273.00
tblOffRoadEquipment	HorsePower	171.00	407.00
tblOffRoadEquipment	HorsePower	171.00	180.00
tblOffRoadEquipment	HorsePower	171.00	210.00
tblOffRoadEquipment	HorsePower	171.00	50.00
tblOffRoadEquipment	HorsePower	171.00	130.00
tblOffRoadEquipment	HorsePower	171.00	305.00
tblOffRoadEquipment	HorsePower	171.00	273.00
tblOffRoadEquipment	HorsePower	171.00	210.00
tblOffRoadEquipment	HorsePower	171.00	180.00
tblOffRoadEquipment	HorsePower	171.00	210.00
tblOffRoadEquipment	HorsePower	171.00	180.00
tblOffRoadEquipment	HorsePower	171.00	407.00
tblOffRoadEquipment	HorsePower	171.00	130.00
tblOffRoadEquipment	HorsePower	171.00	407.00
tblOffRoadEquipment	HorsePower	171.00	130.00
tblOffRoadEquipment	HorsePower	171.00	407.00
tblOffRoadEquipment	HorsePower	171.00	130.00
tblOffRoadEquipment	HorsePower	171.00	407.00
tblOffRoadEquipment	HorsePower	171.00	180.00

tblOffRoadEquipment	HorsePower	171.00	210.00
tblOffRoadEquipment	HorsePower	171.00	50.00
tblOffRoadEquipment	HorsePower	171.00	130.00
tblOffRoadEquipment	HorsePower	171.00	305.00
tblOffRoadEquipment	HorsePower	171.00	273.00
tblOffRoadEquipment	HorsePower	171.00	210.00
tblOffRoadEquipment	HorsePower	171.00	180.00
tblOffRoadEquipment	HorsePower	171.00	210.00
tblOffRoadEquipment	HorsePower	171.00	180.00
tblOffRoadEquipment	HorsePower	171.00	130.00
tblOffRoadEquipment	HorsePower	171.00	130.00
tblOffRoadEquipment	HorsePower	171.00	407.00
tblOffRoadEquipment	HorsePower	171.00	180.00
tblOffRoadEquipment	HorsePower	171.00	210.00
tblOffRoadEquipment	HorsePower	171.00	50.00
tblOffRoadEquipment	HorsePower	171.00	130.00
tblOffRoadEquipment	HorsePower	171.00	305.00
tblOffRoadEquipment	HorsePower	171.00	273.00
tblOffRoadEquipment	HorsePower	171.00	130.00
tblOffRoadEquipment	HorsePower	171.00	130.00
tblOffRoadEquipment	HorsePower	171.00	180.00
tblOffRoadEquipment	HorsePower	171.00	130.00
tblOffRoadEquipment	HorsePower	171.00	180.00
tblOffRoadEquipment	HorsePower	171.00	130.00
tblOffRoadEquipment	HorsePower	171.00	180.00
tblOffRoadEquipment	HorsePower	171.00	130.00
tblOffRoadEquipment	HorsePower	171.00	180.00
tblOffRoadEquipment	HorsePower	171.00	210.00

tblOffRoadEquipment	HorsePower	171.00	130.00
tblOffRoadEquipment	HorsePower	171.00	180.00
tblOffRoadEquipment	HorsePower	171.00	130.00
tblOffRoadEquipment	HorsePower	171.00	180.00
tblOffRoadEquipment	HorsePower	171.00	130.00
tblOffRoadEquipment	HorsePower	171.00	180.00
tblOffRoadEquipment	HorsePower	171.00	407.00
tblOffRoadEquipment	HorsePower	171.00	180.00
tblOffRoadEquipment	HorsePower	171.00	210.00
tblOffRoadEquipment	HorsePower	171.00	50.00
tblOffRoadEquipment	HorsePower	171.00	130.00
tblOffRoadEquipment	HorsePower	171.00	305.00
tblOffRoadEquipment	HorsePower	171.00	273.00
tblOffRoadEquipment	HorsePower	171.00	130.00
tblOffRoadEquipment	HorsePower	171.00	180.00
tblOffRoadEquipment	HorsePower	171.00	407.00
tblOffRoadEquipment	HorsePower	171.00	130.00
tblOffRoadEquipment	HorsePower	171.00	407.00
tblOffRoadEquipment	HorsePower	171.00	130.00
tblOffRoadEquipment	HorsePower	171.00	407.00
tblOffRoadEquipment	HorsePower	171.00	180.00
tblOffRoadEquipment	HorsePower	171.00	210.00
tblOffRoadEquipment	HorsePower	171.00	50.00
tblOffRoadEquipment	HorsePower	171.00	130.00
tblOffRoadEquipment	HorsePower	171.00	305.00
tblOffRoadEquipment	HorsePower	171.00	273.00
tblOffRoadEquipment	HorsePower	8.00	33.00
tblOffRoadEquipment	HorsePower	8.00	14.00

tblOffRoadEquipment	HorsePower	8.00	3.00
tblOffRoadEquipment	HorsePower	8.00	3.00
tblOffRoadEquipment	HorsePower	8.00	3.00
tblOffRoadEquipment	HorsePower	8.00	33.00
tblOffRoadEquipment	HorsePower	8.00	14.00
tblOffRoadEquipment	HorsePower	8.00	3.00
tblOffRoadEquipment	HorsePower	8.00	33.00
tblOffRoadEquipment	HorsePower	8.00	14.00
tblOffRoadEquipment	HorsePower	8.00	3.00
tblOffRoadEquipment	HorsePower	8.00	33.00
tblOffRoadEquipment	HorsePower	8.00	14.00
tblOffRoadEquipment	HorsePower	8.00	3.00
tblOffRoadEquipment	HorsePower	8.00	33.00
tblOffRoadEquipment	HorsePower	8.00	14.00
tblOffRoadEquipment	HorsePower	8.00	3.00
tblOffRoadEquipment	HorsePower	8.00	33.00
tblOffRoadEquipment	HorsePower	8.00	14.00
tblOffRoadEquipment	HorsePower	8.00	3.00
tblOffRoadEquipment	HorsePower	8.00	14.00
tblOffRoadEquipment	HorsePower	8.00	3.00
tblOffRoadEquipment	HorsePower	8.00	14.00
tblOffRoadEquipment	HorsePower	8.00	3.00
tblOffRoadEquipment	HorsePower	8.00	14.00
tblOffRoadEquipment	HorsePower	8.00	3.00
tblOffRoadEquipment	HorsePower	199.00	125.00
tblOffRoadEquipment	HorsePower	199.00	160.00
tblOffRoadEquipment	HorsePower	199.00	125.00
tblOffRoadEquipment	HorsePower	199.00	160.00

tblOffRoadEquipment	HorsePower	199.00	160.00
tblOffRoadEquipment	HorsePower	199.00	160.00
tblOffRoadEquipment	HorsePower	199.00	125.00
tblOffRoadEquipment	HorsePower	199.00	160.00
tblOffRoadEquipment	HorsePower	199.00	125.00
tblOffRoadEquipment	HorsePower	199.00	160.00
tblOffRoadEquipment	HorsePower	199.00	125.00
tblOffRoadEquipment	HorsePower	199.00	160.00
tblOffRoadEquipment	HorsePower	199.00	125.00
tblOffRoadEquipment	HorsePower	199.00	160.00
tblOffRoadEquipment	HorsePower	199.00	160.00
tblOffRoadEquipment	HorsePower	199.00	125.00
tblOffRoadEquipment	HorsePower	199.00	160.00
tblOffRoadEquipment	HorsePower	199.00	160.00
tblOffRoadEquipment	HorsePower	199.00	160.00
tblOffRoadEquipment	HorsePower	199.00	125.00
tblOffRoadEquipment	HorsePower	199.00	125.00
tblOffRoadEquipment	HorsePower	64.00	45.00
tblOffRoadEquipment	HorsePower	64.00	45.00
tblOffRoadEquipment	HorsePower	64.00	45.00
tblOffRoadEquipment	HorsePower	64.00	45.00
tblOffRoadEquipment	HorsePower	64.00	45.00
tblOffRoadEquipment	HorsePower	64.00	45.00
tblOffRoadEquipment	HorsePower	64.00	45.00
tblOffRoadEquipment	HorsePower	64.00	45.00
tblOffRoadEquipment	HorsePower	64.00	45.00
tblOffRoadEquipment	HorsePower	64.00	45.00

tblOffRoadEquipment	HorsePower	64.00	45.00
tblOffRoadEquipment	OffRoadEquipmentUnitAmount	1.00	3.00
tblOffRoadEquipment	OffRoadEquipmentUnitAmount	1.00	6.00
tblOffRoadEquipment	OffRoadEquipmentUnitAmount	1.00	2.00
tblOffRoadEquipment	OffRoadEquipmentUnitAmount	1.00	2.00
tblOffRoadEquipment	OffRoadEquipmentUnitAmount	1.00	2.00
tblOffRoadEquipment	OffRoadEquipmentUnitAmount	1.00	2.00
tblOffRoadEquipment	OffRoadEquipmentUnitAmount	1.00	6.00
tblOffRoadEquipment	OffRoadEquipmentUnitAmount	1.00	7.00
tblOffRoadEquipment	OffRoadEquipmentUnitAmount	1.00	6.00
tblOffRoadEquipment	OffRoadEquipmentUnitAmount	1.00	5.00
tblOffRoadEquipment	OffRoadEquipmentUnitAmount	1.00	2.00
tblOffRoadEquipment	OffRoadEquipmentUnitAmount	1.00	2.00
tblOffRoadEquipment	OffRoadEquipmentUnitAmount	1.00	2.00
tblOffRoadEquipment	OffRoadEquipmentUnitAmount	1.00	5.00
tblOffRoadEquipment	OffRoadEquipmentUnitAmount	1.00	2.00
tblOffRoadEquipment	OffRoadEquipmentUnitAmount	1.00	2.00
tblOffRoadEquipment	OffRoadEquipmentUnitAmount	1.00	2.00
tblOffRoadEquipment	OffRoadEquipmentUnitAmount	1.00	3.00
tblOffRoadEquipment	OffRoadEquipmentUnitAmount	1.00	2.00
tblOffRoadEquipment	OffRoadEquipmentUnitAmount	1.00	2.00
tblOffRoadEquipment	OffRoadEquipmentUnitAmount	1.00	5.00
tblOffRoadEquipment	OffRoadEquipmentUnitAmount	1.00	2.00
tblOffRoadEquipment	OffRoadEquipmentUnitAmount	1.00	3.00
tblOffRoadEquipment	OffRoadEquipmentUnitAmount	3.00	2.00
tblOffRoadEquipment	OffRoadEquipmentUnitAmount	3.00	2.00
tblOffRoadEquipment	OffRoadEquipmentUnitAmount	3.00	2.00
tblOffRoadEquipment	OffRoadEquipmentUnitAmount	3.00	2.00

tblOffRoadEquipment	OffRoadEquipmentUnitAmount	3.00	2.00
tblOffRoadEquipment	OffRoadEquipmentUnitAmount	3.00	2.00
tblOffRoadEquipment	OffRoadEquipmentUnitAmount	3.00	2.00
tblOffRoadEquipment	OffRoadEquipmentUnitAmount	3.00	2.00
tblOffRoadEquipment	OffRoadEquipmentUnitAmount	3.00	2.00
tblOffRoadEquipment	OffRoadEquipmentUnitAmount	3.00	2.00
tblOffRoadEquipment	OffRoadEquipmentUnitAmount	3.00	2.00
tblOffRoadEquipment	OffRoadEquipmentUnitAmount	3.00	2.00
tblOffRoadEquipment	OffRoadEquipmentUnitAmount	1.00	3.00
tblOffRoadEquipment	OffRoadEquipmentUnitAmount	1.00	3.00
tblOffRoadEquipment	OffRoadEquipmentUnitAmount	1.00	3.00
tblOffRoadEquipment	OffRoadEquipmentUnitAmount	1.00	3.00
tblOffRoadEquipment	OffRoadEquipmentUnitAmount	1.00	3.00
tblOffRoadEquipment	OffRoadEquipmentUnitAmount	1.00	4.00
tblOffRoadEquipment	OffRoadEquipmentUnitAmount	1.00	4.00
tblOffRoadEquipment	OffRoadEquipmentUnitAmount	1.00	4.00
tblOffRoadEquipment	OffRoadEquipmentUnitAmount	1.00	4.00
tblOffRoadEquipment	OffRoadEquipmentUnitAmount	1.00	4.00
tblOffRoadEquipment	OffRoadEquipmentUnitAmount	1.00	3.00
tblOffRoadEquipment	OffRoadEquipmentUnitAmount	1.00	3.00
tblOffRoadEquipment	OffRoadEquipmentUnitAmount	3.00	1.00
tblOffRoadEquipment	OffRoadEquipmentUnitAmount	3.00	1.00
tblOffRoadEquipment	OffRoadEquipmentUnitAmount	3.00	1.00
tblOffRoadEquipment	OffRoadEquipmentUnitAmount	3.00	4.00
tblOffRoadEquipment	OffRoadEquipmentUnitAmount	3.00	1.00
tblOffRoadEquipment	OffRoadEquipmentUnitAmount	3.00	1.00
tblOffRoadEquipment	OffRoadEquipmentUnitAmount	3.00	4.00
tblOffRoadEquipment	OffRoadEquipmentUnitAmount	3.00	2.00

tblOffRoadEquipment	OffRoadEquipmentUnitAmount	3.00	2.00
tblOffRoadEquipment	OffRoadEquipmentUnitAmount	3.00	1.00
tblOffRoadEquipment	OffRoadEquipmentUnitAmount	3.00	1.00
tblOffRoadEquipment	OffRoadEquipmentUnitAmount	3.00	1.00
tblOffRoadEquipment	OffRoadEquipmentUnitAmount	3.00	1.00
tblOffRoadEquipment	OffRoadEquipmentUnitAmount	3.00	1.00
tblOffRoadEquipment	OffRoadEquipmentUnitAmount	3.00	1.00
tblOffRoadEquipment	OffRoadEquipmentUnitAmount	1.00	2.00
tblOffRoadEquipment	OffRoadEquipmentUnitAmount	1.00	6.00
tblOffRoadEquipment	OffRoadEquipmentUnitAmount	1.00	9.00
tblOffRoadEquipment	OffRoadEquipmentUnitAmount	1.00	2.00
tblOffRoadEquipment	OffRoadEquipmentUnitAmount	1.00	2.00
tblOffRoadEquipment	OffRoadEquipmentUnitAmount	1.00	2.00
tblOffRoadEquipment	OffRoadEquipmentUnitAmount	1.00	2.00
tblOffRoadEquipment	OffRoadEquipmentUnitAmount	1.00	2.00
tblOffRoadEquipment	OffRoadEquipmentUnitAmount	1.00	9.00
tblOffRoadEquipment	OffRoadEquipmentUnitAmount	1.00	2.00
tblOffRoadEquipment	OffRoadEquipmentUnitAmount	1.00	9.00
tblOffRoadEquipment	OffRoadEquipmentUnitAmount	1.00	4.00
tblOffRoadEquipment	OffRoadEquipmentUnitAmount	1.00	9.00
tblOffRoadEquipment	OffRoadEquipmentUnitAmount	1.00	4.00
tblOffRoadEquipment	OffRoadEquipmentUnitAmount	1.00	8.00
tblOffRoadEquipment	OffRoadEquipmentUnitAmount	1.00	4.00
tblOffRoadEquipment	OffRoadEquipmentUnitAmount	1.00	8.00
tblOffRoadEquipment	OffRoadEquipmentUnitAmount	1.00	2.00
tblOffRoadEquipment	OffRoadEquipmentUnitAmount	1.00	2.00
tblOffRoadEquipment	OffRoadEquipmentUnitAmount	1.00	2.00
tblOffRoadEquipment	OffRoadEquipmentUnitAmount	1.00	2.00

tblOffRoadEquipment	OffRoadEquipmentUnitAmount	1.00	2.00
tblOffRoadEquipment	OffRoadEquipmentUnitAmount	1.00	4.00
tblOffRoadEquipment	OffRoadEquipmentUnitAmount	1.00	8.00
tblOffRoadEquipment	OffRoadEquipmentUnitAmount	1.00	4.00
tblOffRoadEquipment	OffRoadEquipmentUnitAmount	1.00	6.00
tblOffRoadEquipment	UsageHours	7.00	10.00
tblOffRoadEquipment	UsageHours	7.00	10.00
tblOffRoadEquipment	UsageHours	7.00	10.00
tblOffRoadEquipment	UsageHours	7.00	10.00
tblOffRoadEquipment	UsageHours	7.00	10.00
tblOffRoadEquipment	UsageHours	7.00	10.00
tblOffRoadEquipment	UsageHours	7.00	10.00
tblOffRoadEquipment	UsageHours	7.00	10.00
tblOffRoadEquipment	UsageHours	7.00	10.00
tblOffRoadEquipment	UsageHours	7.00	10.00
tblOffRoadEquipment	UsageHours	7.00	10.00
tblOffRoadEquipment	UsageHours	7.00	10.00
tblOffRoadEquipment	UsageHours	7.00	10.00
tblOffRoadEquipment	UsageHours	7.00	10.00
tblOffRoadEquipment	UsageHours	7.00	10.00
tblOffRoadEquipment	UsageHours	7.00	10.00
tblOffRoadEquipment	UsageHours	7.00	10.00
tblOffRoadEquipment	UsageHours	7.00	10.00
tblOffRoadEquipment	UsageHours	7.00	10.00
tblOffRoadEquipment	UsageHours	7.00	10.00

tblOffRoadEquipment	UsageHours	7.00	10.00
tblOffRoadEquipment	UsageHours	7.00	10.00
tblOffRoadEquipment	UsageHours	7.00	10.00
tblOffRoadEquipment	UsageHours	7.00	10.00
tblOffRoadEquipment	UsageHours	7.00	10.00
tblOffRoadEquipment	UsageHours	7.00	10.00
tblOffRoadEquipment	UsageHours	7.00	10.00
tblOffRoadEquipment	UsageHours	7.00	10.00
tblOffRoadEquipment	UsageHours	7.00	10.00
tblOffRoadEquipment	UsageHours	7.00	10.00
tblOffRoadEquipment	UsageHours	7.00	10.00
tblOffRoadEquipment	UsageHours	7.00	10.00
tblOffRoadEquipment	UsageHours	7.00	10.00
tblOffRoadEquipment	UsageHours	7.00	10.00
tblOffRoadEquipment	UsageHours	7.00	10.00
tblOffRoadEquipment	UsageHours	7.00	10.00
tblOffRoadEquipment	UsageHours	7.00	10.00
tblOffRoadEquipment	UsageHours	7.00	10.00
tblOffRoadEquipment	UsageHours	7.00	10.00
tblOffRoadEquipment	UsageHours	7.00	10.00
tblOffRoadEquipment	UsageHours	7.00	10.00
tblOffRoadEquipment	UsageHours	7.00	10.00
tblOffRoadEquipment	UsageHours	7.00	10.00
tblOffRoadEquipment	UsageHours	7.00	10.00
tblOffRoadEquipment	UsageHours	7.00	10.00

tblOffRoadEquipment	UsageHours	7.00	10.00
tblOffRoadEquipment	UsageHours	7.00	10.00
tblOffRoadEquipment	UsageHours	8.00	10.00
tblOffRoadEquipment	UsageHours	8.00	10.00
tblOffRoadEquipment	UsageHours	8.00	10.00
tblOffRoadEquipment	UsageHours	8.00	10.00
tblOffRoadEquipment	UsageHours	8.00	10.00
tblOffRoadEquipment	UsageHours	8.00	10.00
tblOffRoadEquipment	UsageHours	8.00	10.00
tblOffRoadEquipment	UsageHours	8.00	10.00
tblOffRoadEquipment	UsageHours	8.00	10.00
tblOffRoadEquipment	UsageHours	8.00	10.00
tblOffRoadEquipment	UsageHours	8.00	10.00
tblOffRoadEquipment	UsageHours	8.00	10.00
tblOffRoadEquipment	UsageHours	8.00	10.00
tblOffRoadEquipment	UsageHours	8.00	10.00
tblOffRoadEquipment	UsageHours	8.00	10.00
tblOffRoadEquipment	UsageHours	8.00	10.00
tblOffRoadEquipment	UsageHours	8.00	10.00
tblOffRoadEquipment	UsageHours	8.00	10.00
tblOffRoadEquipment	UsageHours	8.00	10.00
tblOffRoadEquipment	UsageHours	8.00	10.00
tblOffRoadEquipment	UsageHours	8.00	10.00
tblOffRoadEquipment	UsageHours	8.00	10.00
tblOffRoadEquipment	UsageHours	7.00	10.00
tblOffRoadEquipment	UsageHours	7.00	10.00

tblOffRoadEquipment	UsageHours	7.00	10.00
tblOffRoadEquipment	UsageHours	7.00	10.00
tblOffRoadEquipment	UsageHours	7.00	10.00
tblOffRoadEquipment	UsageHours	7.00	10.00
tblOffRoadEquipment	UsageHours	7.00	10.00
tblOffRoadEquipment	UsageHours	7.00	10.00
tblOffRoadEquipment	UsageHours	7.00	10.00
tblOffRoadEquipment	UsageHours	7.00	10.00
tblOffRoadEquipment	UsageHours	7.00	10.00
tblOffRoadEquipment	UsageHours	7.00	10.00
tblOffRoadEquipment	UsageHours	7.00	10.00
tblOffRoadEquipment	UsageHours	7.00	10.00
tblOffRoadEquipment	UsageHours	7.00	10.00
tblOffRoadEquipment	UsageHours	7.00	10.00
tblOffRoadEquipment	UsageHours	7.00	10.00
tblOffRoadEquipment	UsageHours	8.00	10.00
tblOffRoadEquipment	UsageHours	8.00	10.00
tblOffRoadEquipment	UsageHours	8.00	10.00
tblOffRoadEquipment	UsageHours	8.00	10.00
tblOffRoadEquipment	UsageHours	8.00	10.00
tblOffRoadEquipment	UsageHours	8.00	10.00
tblOffRoadEquipment	UsageHours	8.00	10.00
tblOffRoadEquipment	UsageHours	8.00	10.00
tblOffRoadEquipment	UsageHours	8.00	10.00
tblOffRoadEquipment	UsageHours	8.00	10.00
tblOffRoadEquipment	UsageHours	8.00	10.00
tblOffRoadEquipment	UsageHours	8.00	10.00

tblOffRoadEquipment	UsageHours	8.00	10.00
tblOffRoadEquipment	UsageHours	8.00	10.00
tblOffRoadEquipment	UsageHours	8.00	10.00
tblOffRoadEquipment	UsageHours	8.00	10.00
tblOffRoadEquipment	UsageHours	8.00	10.00
tblOffRoadEquipment	UsageHours	8.00	10.00
tblOffRoadEquipment	UsageHours	8.00	10.00
tblOffRoadEquipment	UsageHours	8.00	10.00
tblOffRoadEquipment	UsageHours	8.00	10.00
tblOffRoadEquipment	UsageHours	8.00	10.00
tblOffRoadEquipment	UsageHours	8.00	10.00
tblOffRoadEquipment	UsageHours	8.00	10.00
tblOffRoadEquipment	UsageHours	8.00	10.00
tblOffRoadEquipment	UsageHours	8.00	10.00
tblOffRoadEquipment	UsageHours	8.00	10.00
tblOffRoadEquipment	UsageHours	8.00	10.00
tblOffRoadEquipment	UsageHours	8.00	10.00
tblOffRoadEquipment	UsageHours	8.00	10.00
tblOffRoadEquipment	UsageHours	8.00	10.00
tblOffRoadEquipment	UsageHours	8.00	10.00
tblOffRoadEquipment	UsageHours	8.00	10.00
tblOffRoadEquipment	UsageHours	8.00	10.00
tblOffRoadEquipment	UsageHours	8.00	10.00
tblOffRoadEquipment	UsageHours	8.00	10.00
tblOffRoadEquipment	UsageHours	8.00	10.00

tblOffRoadEquipment	UsageHours	8.00	10.00
tblProjectCharacteristics	OperationalYear	2014	2035
tblProjectCharacteristics	UrbanizationLevel	Urban	Rural

2.0 Emissions Summary

2.1 Overall Construction

Unmitigated Construction

	ROG	NOx	CO	SO2	Fugitive PM10	Exhaust PM10	PM10 Total	Fugitive PM2.5	Exhaust PM2.5	PM2.5 Total	Bio- CO2	NBio- CO2	Total CO2	CH4	N2O	CO2e
Year	tons/yr										MT/yr					
2024	3.4085	31.5418	24.7688	0.0628	0.0000	1.3139	1.3139	0.0000	1.2185	1.2185	0.0000	5,425.9485	5,425.9485	1.6571	0.0000	5,460.7467
2025	0.0101	0.1027	0.0563	1.9000e-004	0.0000	4.3600e-003	4.3600e-003	0.0000	4.0100e-003	4.0100e-003	0.0000	16.4295	16.4295	5.3100e-003	0.0000	16.5411
2026	0.2585	2.3623	2.0366	5.2300e-003	0.0000	0.0979	0.0979	0.0000	0.0906	0.0906	0.0000	453.4299	453.4299	0.1397	0.0000	456.3637
2027					0.0000	0.0000	0.0000	0.0000	0.0000	0.0000	0.0000	0.0000	0.0000	0.0000	0.0000	0.0000
2028	0.2186	2.1319	1.4791	4.9700e-003	0.0000	0.0852	0.0852	0.0000	0.0784	0.0784	0.0000	436.1813	436.1813	0.1411	0.0000	439.1438
2029	0.1097	1.0099	0.7779	1.9700e-003	0.0000	0.0415	0.0415	0.0000	0.0385	0.0385	0.0000	169.5410	169.5410	0.0504	0.0000	170.5988
2030	0.2663	1.0686	2.1272	6.6500e-003	0.0000	0.0335	0.0335	0.0000	0.0335	0.0335	0.0000	592.2853	592.2853	0.0213	0.0000	592.7326
Total	**4.2716**	**38.2171**	**31.2459**	**0.0818**	**0.0000**	**1.5764**	**1.5764**	**0.0000**	**1.4635**	**1.4635**	**0.0000**	**7,093.8156**	**7,093.8156**	**2.0148**	**0.0000**	**7,136.1266**

2.1 Overall Construction

Mitigated Construction

	ROG	NOx	CO	SO2	Fugitive PM10	Exhaust PM10	PM10 Total	Fugitive PM2.5	Exhaust PM2.5	PM2.5 Total	Bio- CO2	NBio- CO2	Total CO2	CH4	N2O	CO2e
Year	tons/yr										MT/yr					
2024	0.8118	6.3278	32.4766	0.0628	0.0000	0.0981	0.0981	0.0000	0.0981	0.0981	0.0000	5,425.9421	5,425.9421	1.6571	0.0000	5,460.7402
2025	2.3000e-003	9.9600e-003	0.0842	1.9000e-004	0.0000	3.1000e-004	3.1000e-004	0.0000	3.1000e-004	3.1000e-004	0.0000	16.4295	16.4295	5.3100e-003	0.0000	16.5411
2026	0.0672	0.4535	2.7893	5.2300e-003	0.0000	8.3700e-003	8.3700e-003	0.0000	8.3700e-003	8.3700e-003	0.0000	453.4293	453.4293	0.1397	0.0000	456.3631
2027					0.0000	0.0000	0.0000	0.0000	0.0000	0.0000	0.0000	0.0000	0.0000	0.0000	0.0000	0.0000
2028	0.0611	0.2647	2.3824	4.9700e-003	0.0000	8.1400e-003	8.1400e-003	0.0000	8.1400e-003	8.1400e-003	0.0000	436.1808	436.1808	0.1411	0.0000	439.1432
2029	0.0256	0.1954	1.0232	1.9700e-003	0.0000	3.1100e-003	3.1100e-003	0.0000	3.1100e-003	3.1100e-003	0.0000	169.5408	169.5408	0.0504	0.0000	170.5985
2030	0.0741	0.5117	3.0828	6.6500e-003	0.0000	9.1900e-003	9.1900e-003	0.0000	9.1900e-003	9.1900e-003	0.0000	592.2846	592.2846	0.0213	0.0000	592.7319
Total	**1.0420**	**7.7630**	**41.8385**	**0.0818**	**0.0000**	**0.1273**	**0.1273**	**0.0000**	**0.1273**	**0.1273**	**0.0000**	**7,093.8071**	**7,093.8071**	**2.0148**	**0.0000**	**7,136.1181**

	ROG	NOx	CO	SO2	Fugitive PM10	Exhaust PM10	PM10 Total	Fugitive PM2.5	Exhaust PM2.5	PM2.5 Total	Bio- CO2	NBio-CO2	Total CO2	CH4	N20	CO2e
Percent Reduction	**75.61**	**79.69**	**-33.90**	**0.00**	**0.00**	**91.93**	**91.93**	**0.00**	**91.31**	**91.31**	**0.00**	**0.00**	**0.00**	**0.00**	**0.00**	**0.00**

2.2 Overall Operational

Unmitigated Operational

	ROG	NOx	CO	SO2	Fugitive PM10	Exhaust PM10	PM10 Total	Fugitive PM2.5	Exhaust PM2.5	PM2.5 Total	Bio- CO2	NBio- CO2	Total CO2	CH4	N2O	CO2e
Category	tons/yr										MT/yr					
Area	0.0000					0.0000	0.0000		0.0000	0.0000	0.0000	0.0000	0.0000	0.0000	0.0000	0.0000
Energy	0.0000	0.0000	0.0000	0.0000		0.0000	0.0000		0.0000	0.0000	0.0000	0.0000	0.0000	0.0000	0.0000	0.0000
Mobile	0.0000	0.0000	0.0000	0.0000	0.0000	0.0000	0.0000	0.0000	0.0000	0.0000	0.0000	0.0000	0.0000	0.0000	0.0000	0.0000
Waste						0.0000	0.0000		0.0000	0.0000	0.0000	0.0000	0.0000	0.0000	0.0000	0.0000
Water						0.0000	0.0000		0.0000	0.0000	0.0000	0.0000	0.0000	0.0000	0.0000	0.0000
Total	**0.0000**	**0.0000**	**0.0000**	**0.0000**	**0.0000**	**0.0000**	**0.0000**	**0.0000**	**0.0000**	**0.0000**	**0.0000**	**0.0000**	**0.0000**	**0.0000**	**0.0000**	**0.0000**

2.2 Overall Operational

Mitigated Operational

	ROG	NOx	CO	SO2	Fugitive PM10	Exhaust PM10	PM10 Total	Fugitive PM2.5	Exhaust PM2.5	PM2.5 Total	Bio- CO2	NBio- CO2	Total CO2	CH4	N2O	CO2e
Category	tons/yr										MT/yr					
Area	0.0000					0.0000	0.0000		0.0000	0.0000	0.0000	0.0000	0.0000	0.0000	0.0000	0.0000
Energy	0.0000	0.0000	0.0000	0.0000		0.0000	0.0000		0.0000	0.0000	0.0000	0.0000	0.0000	0.0000	0.0000	0.0000
Mobile	0.0000	0.0000	0.0000	0.0000	0.0000	0.0000	0.0000	0.0000	0.0000	0.0000	0.0000	0.0000	0.0000	0.0000	0.0000	0.0000
Waste						0.0000	0.0000		0.0000	0.0000	0.0000	0.0000	0.0000	0.0000	0.0000	0.0000
Water						0.0000	0.0000		0.0000	0.0000	0.0000	0.0000	0.0000	0.0000	0.0000	0.0000
Total	**0.0000**	**0.0000**	**0.0000**	**0.0000**	**0.0000**	**0.0000**	**0.0000**	**0.0000**	**0.0000**	**0.0000**	**0.0000**	**0.0000**	**0.0000**	**0.0000**	**0.0000**	**0.0000**

	ROG	**NOx**	**CO**	**SO2**	**Fugitive PM10**	**Exhaust PM10**	**PM10 Total**	**Fugitive PM2.5**	**Exhaust PM2.5**	**PM2.5 Total**	**Bio- CO2**	**NBio-CO2**	**Total CO2**	**CH4**	**N20**	**CO2e**
Percent Reduction	**0.00**	**0.00**	**0.00**	**0.00**	**0.00**	**0.00**	**0.00**	**0.00**	**0.00**	**0.00**	**0.00**	**0.00**	**0.00**	**0.00**	**0.00**	**0.00**

3.0 Construction Detail

Construction Phase

Phase Number	Phase Name	Phase Type	Start Date	End Date	Num Days Week	Num Days	Phase Description
1	Year 5 Month 1	Building Construction	1/1/2024	1/31/2024	6	27	
2	Year 5 Month 2	Building Construction	2/1/2024	2/28/2024	6	24	
3	Year 5 Month 3	Building Construction	3/1/2024	3/30/2024	6	26	

4	Year 5 Month 4	Building Construction	4/1/2024	4/30/2024	6	26	
5	Year 5 Month 5	Building Construction	5/1/2024	5/31/2024	6	27	
6	Year 5 Month 6	Building Construction	6/1/2024	6/29/2024	6	25	
7	Year 5 Month 7	Building Construction	7/1/2024	7/31/2024	6	27	
8	Year 5 Month 8	Building Construction	8/1/2024	8/31/2024	6	27	
9	Year 5 Month 9	Building Construction	9/1/2024	9/30/2024	6	25	
10	Year 5 Month 10	Building Construction	10/1/2024	10/31/2024	6	27	
11	Year 5 Month 11	Building Construction	11/1/2024	11/30/2024	6	26	
12	Year 5 Month 12	Building Construction	12/1/2024	12/31/2024	6	26	
13	Year 6 Month 1	Building Construction	1/1/2025	1/31/2025	6	27	
14	Year 6 Month 2	Building Construction	2/1/2025	2/28/2025	6	24	
15	Year 6 Month 3	Building Construction	3/1/2025	3/31/2025	6	26	
16	Year 6 Month 4	Building Construction	4/1/2025	4/30/2025	6	26	
17	Year 6 Month 5	Building Construction	5/1/2025	5/31/2025	6	27	
18	Year 6 Month 6	Building Construction	6/1/2025	6/30/2025	6	25	
19	Year 6 Month 7	Building Construction	7/1/2025	7/31/2025	6	27	
20	Year 6 Month 8	Building Construction	8/1/2025	8/30/2025	6	26	
21	Year 6 Month 9	Building Construction	9/1/2025	9/30/2025	6	26	
22	Year 6 Month 10	Building Construction	10/1/2025	10/31/2025	6	27	
23	Year 6 Month 11	Building Construction	11/1/2025	11/29/2025	6	25	
24	Year 6 Month 12	Building Construction	12/1/2025	12/31/2025	6	27	
25	Year 7 Month 1	Building Construction	1/1/2026	1/31/2026	6	27	
26	Year 7 Month 2	Building Construction	2/1/2026	2/28/2026	6	24	
27	Year 7 Month 3	Building Construction	3/1/2026	3/31/2026	6	26	
28	Year 7 Month 4	Building Construction	4/1/2026	4/30/2026	6	26	
29	Year 7 Month 5	Building Construction	5/1/2026	5/30/2026	6	26	
30	Year 7 Month 6	Building Construction	6/1/2026	6/30/2026	6	26	
31	Year 7 Month 7	Building Construction	7/1/2026	7/31/2026	6	27	

32	Year 7 Month 8	Building Construction	8/1/2026	8/31/2026	6	26	
33	Year 7 Month 9	Building Construction	9/1/2026	9/30/2026	6	26	
34	Year 7 Month 10	Building Construction	10/1/2026	10/31/2026	6	27	
35	Year 7 Month 11	Building Construction	11/1/2026	11/30/2026	6	25	
36	Year 7 Month 12	Building Construction	12/1/2026	12/31/2026	6	27	
37	Year 8 Month 1	Building Construction	1/1/2027	1/30/2027	6	26	
38	Year 8 Month 2	Building Construction	2/1/2027	2/27/2027	6	24	
39	Year 8 Month 3	Building Construction	3/1/2027	3/31/2027	6	27	
40	Year 8 Month 4	Building Construction	4/1/2027	4/30/2027	6	26	
41	Year 8 Month 5	Building Construction	5/1/2027	5/31/2027	6	26	
42	Year 8 Month 6	Building Construction	6/1/2027	6/30/2027	6	26	
43	Year 8 Month 7	Building Construction	7/1/2027	7/31/2027	6	27	
44	Year 8 Month 8	Building Construction	8/1/2027	8/31/2027	6	26	
45	Year 8 Month 9	Building Construction	9/1/2027	9/30/2027	6	26	
46	Year 8 Month 10	Building Construction	10/1/2027	10/30/2027	6	26	
47	Year 8 Month 11	Building Construction	11/1/2027	11/30/2027	6	26	
48	Year 8 Month 12	Building Construction	12/1/2027	12/31/2027	6	27	
49	Year 9 Month 1	Building Construction	1/1/2028	1/31/2028	6	26	
50	Year 9 Month 2	Building Construction	2/1/2028	2/28/2028	6	24	
51	Year 9 Month 3	Building Construction	3/1/2028	3/31/2028	6	27	
52	Year 9 Month 4	Building Construction	4/1/2028	4/29/2028	6	25	
53	Year 9 Month 5	Building Construction	5/1/2028	5/31/2028	6	27	
54	Year 9 Month 6	Building Construction	6/1/2028	6/30/2028	6	26	
55	Year 9 Month 7	Building Construction	7/1/2028	7/31/2028	6	26	
56	Year 9 Month 8	Building Construction	8/1/2028	8/31/2028	6	27	
57	Year 9 Month 9	Building Construction	9/1/2028	9/30/2028	6	26	
58	Year 9 Month 10	Building Construction	10/1/2028	10/31/2028	6	26	
59	Year 9 Month 11	Building Construction	11/1/2028	11/30/2028	6	26	

60	Year 9 Month 12	Building Construction	12/1/2028	12/30/2028	6	26	
61	Year 10 Month 1	Building Construction	1/1/2029	1/31/2029	6	27	
62	Year 10 Month 2	Building Construction	2/1/2029	2/28/2029	6	24	
63	Year 10 Month 3	Building Construction	3/1/2029	3/31/2029	6	27	
64	Year 10 Month 4	Building Construction	4/1/2029	4/30/2029	6	25	
65	Year 10 Month 5	Building Construction	5/1/2029	5/31/2029	6	27	
66	Year 10 Month 6	Building Construction	6/1/2029	6/30/2029	6	26	
67	Year 10 Month 7	Building Construction	7/1/2029	7/31/2029	6	26	
68	Year 10 Month 8	Building Construction	8/1/2029	8/31/2029	6	27	
69	Year 10 Month 9	Building Construction	9/1/2029	9/29/2029	6	25	
70	Year 10 Month 10	Building Construction	10/1/2029	10/31/2029	6	27	
71	Year 10 Month 11	Building Construction	11/1/2029	11/30/2029	6	26	
72	Year 10 Month 12	Building Construction	12/1/2029	12/31/2029	6	26	
73	Year 11 Month 1	Building Construction	1/1/2030	1/31/2030	6	27	
74	Year 11 Month 2	Building Construction	2/1/2030	2/28/2030	6	24	
75	Year 11 Month 3	Building Construction	3/1/2030	3/30/2030	6	26	
76	Year 11 Month 4	Building Construction	4/1/2030	4/30/2030	6	26	
77	Year 11 Month 5	Building Construction	5/1/2030	5/31/2030	6	27	
78	Year 11 Month 6	Building Construction	6/1/2030	6/29/2030	6	25	
79	Year 11 Month 7	Building Construction	7/1/2030	7/31/2030	6	27	
80	Year 11 Month 8	Building Construction	8/1/2030	8/31/2030	6	27	
81	Year 11 Month 9	Building Construction	9/1/2030	9/30/2030	6	25	
82	Year 11 Month 10	Building Construction	10/1/2030	10/31/2030	6	27	
83	Year 11 Month 11	Building Construction	11/1/2030	11/30/2030	6	26	
84	Year 11 Month 12	Building Construction	12/1/2030	12/31/2030	6	26	

Acres of Grading (Site Preparation Phase): 0

Acres of Grading (Grading Phase): 0

Acres of Paving: 0

Residential Indoor: 0; Residential Outdoor: 0; Non-Residential Indoor: 0; Non-Residential Outdoor: 0 (Architectural Coating – sqft)

OffRoad Equipment

Phase Name	Offroad Equipment Type	Amount	Usage Hours	Horse Power	Load Factor
Year 5 Month 1	Air Compressors	1	10.00	50	0.48
Year 5 Month 1	Crawler Tractors	9	10.00	232	0.43
Year 5 Month 1	Crawler Tractors	2	10.00	585	0.43
Year 5 Month 1	Crawler Tractors	2	10.00	207	0.43
Year 5 Month 1	Forklifts	2	10.00	73	0.20
Year 5 Month 1	Generator Sets	3	10.00	18	0.74
Year 5 Month 1	Graders	2	10.00	259	0.41
Year 5 Month 1	Other Construction Equipment	2	10.00	407	0.42
Year 5 Month 1	Other Construction Equipment	4	10.00	180	0.42
Year 5 Month 1	Other Construction Equipment	3	10.00	210	0.42
Year 5 Month 1	Other Construction Equipment	1	10.00	50	0.42
Year 5 Month 1	Other Construction Equipment	7	10.00	130	0.42
Year 5 Month 1	Other Construction Equipment	1	10.00	273	0.42
Year 5 Month 1	Plate Compactors	1	10.00	33	0.43
Year 5 Month 1	Plate Compactors	1	10.00	14	0.43
Year 5 Month 1	Plate Compactors	1	10.00	3	0.43
Year 5 Month 1	Rubber Tired Loaders	1	10.00	125	0.36
Year 5 Month 1	Rubber Tired Loaders	2	10.00	160	0.36
Year 5 Month 1	Skid Steer Loaders	1	10.00	45	0.37
Year 5 Month 1	Tractors/Loaders/Backhoes	3	10.00	67	0.37
Year 5 Month 1	Welders	1	10.00	48	0.45
Year 5 Month 2	Air Compressors	1	10.00	50	0.48
Year 5 Month 2	Cranes	6	10.00	226	0.29

Year 5 Month 2	Cranes	1	10.00	62	0.29
Year 5 Month 2	Cranes	1	10.00	150	0.29
Year 5 Month 2	Crawler Tractors	9	10.00	232	0.43
Year 5 Month 2	Crawler Tractors	2	10.00	585	0.43
Year 5 Month 2	Crawler Tractors	2	10.00	207	0.43
Year 5 Month 2	Forklifts	2	10.00	73	0.20
Year 5 Month 2	Generator Sets	3	10.00	18	0.74
Year 5 Month 2	Graders	2	10.00	259	0.41
Year 5 Month 2	Other Construction Equipment	2	10.00	407	0.42
Year 5 Month 2	Other Construction Equipment	9	10.00	180	0.42
Year 5 Month 2	Other Construction Equipment	3	10.00	210	0.42
Year 5 Month 2	Other Construction Equipment	1	10.00	50	0.42
Year 5 Month 2	Other Construction Equipment	12	10.00	130	0.42
Year 5 Month 2	Other Construction Equipment	1	10.00	273	0.42
Year 5 Month 2	Plate Compactors	1	10.00	33	0.43
Year 5 Month 2	Plate Compactors	1	10.00	14	0.43
Year 5 Month 2	Plate Compactors	1	10.00	3	0.43
Year 5 Month 2	Rubber Tired Loaders	1	10.00	125	0.36
Year 5 Month 2	Rubber Tired Loaders	2	10.00	160	0.36
Year 5 Month 2	Skid Steer Loaders	1	10.00	45	0.37
Year 5 Month 2	Tractors/Loaders/Backhoes	4	10.00	67	0.37
Year 5 Month 2	Welders	1	10.00	48	0.45
Year 5 Month 2	Welders	9	10.00	42	0.45
Year 5 Month 3	Aerial Lifts	1	10.00	60	0.31
Year 5 Month 3	Aerial Lifts	1	10.00	24	0.31
Year 5 Month 3	Air Compressors	2	10.00	50	0.48
Year 5 Month 3	Cranes	6	10.00	226	0.29
Year 5 Month 3	Cranes	1	10.00	62	0.29

Year 5 Month 3	Cranes	1	10.00	150	0.29
Year 5 Month 3	Crawler Tractors	9	10.00	232	0.43
Year 5 Month 3	Crawler Tractors	2	10.00	585	0.43
Year 5 Month 3	Crawler Tractors	2	10.00	207	0.43
Year 5 Month 3	Forklifts	2	10.00	73	0.20
Year 5 Month 3	Generator Sets	4	10.00	18	0.74
Year 5 Month 3	Graders	2	10.00	259	0.41
Year 5 Month 3	Other Construction Equipment	2	10.00	407	0.42
Year 5 Month 3	Other Construction Equipment	10	10.00	180	0.42
Year 5 Month 3	Other Construction Equipment	3	10.00	210	0.42
Year 5 Month 3	Other Construction Equipment	2	10.00	50	0.42
Year 5 Month 3	Other Construction Equipment	12	10.00	130	0.42
Year 5 Month 3	Other Construction Equipment	2	10.00	305	0.42
Year 5 Month 3	Other Construction Equipment	1	10.00	273	0.42
Year 5 Month 3	Plate Compactors	1	10.00	33	0.43
Year 5 Month 3	Plate Compactors	1	10.00	14	0.43
Year 5 Month 3	Plate Compactors	1	10.00	3	0.43
Year 5 Month 3	Rubber Tired Loaders	1	10.00	125	0.36
Year 5 Month 3	Rubber Tired Loaders	2	10.00	160	0.36
Year 5 Month 3	Skid Steer Loaders	1	10.00	45	0.37
Year 5 Month 3	Tractors/Loaders/Backhoes	4	10.00	67	0.37
Year 5 Month 3	Welders	2	10.00	48	0.45
Year 5 Month 3	Welders	9	10.00	42	0.45
Year 5 Month 4	Aerial Lifts	1	10.00	60	0.31
Year 5 Month 4	Aerial Lifts	1	10.00	24	0.31
Year 5 Month 4	Air Compressors	2	10.00	50	0.48
Year 5 Month 4	Cranes	7	10.00	226	0.29
Year 5 Month 4	Cranes	1	10.00	62	0.29

Year 5 Month 4	Cranes	1	10.00	150	0.29
Year 5 Month 4	Crawler Tractors	8	10.00	232	0.43
Year 5 Month 4	Crawler Tractors	2	10.00	585	0.43
Year 5 Month 4	Crawler Tractors	2	10.00	207	0.43
Year 5 Month 4	Forklifts	2	10.00	73	0.20
Year 5 Month 4	Generator Sets	4	10.00	18	0.74
Year 5 Month 4	Graders	2	10.00	259	0.41
Year 5 Month 4	Other Construction Equipment	2	10.00	407	0.42
Year 5 Month 4	Other Construction Equipment	13	10.00	180	0.42
Year 5 Month 4	Other Construction Equipment	6	10.00	210	0.42
Year 5 Month 4	Other Construction Equipment	2	10.00	50	0.42
Year 5 Month 4	Other Construction Equipment	12	10.00	130	0.42
Year 5 Month 4	Other Construction Equipment	2	10.00	305	0.42
Year 5 Month 4	Other Construction Equipment	1	10.00	273	0.42
Year 5 Month 4	Plate Compactors	1	10.00	33	0.43
Year 5 Month 4	Plate Compactors	1	10.00	14	0.43
Year 5 Month 4	Plate Compactors	1	10.00	3	0.43
Year 5 Month 4	Rubber Tired Loaders	1	10.00	125	0.36
Year 5 Month 4	Rubber Tired Loaders	1	10.00	160	0.36
Year 5 Month 4	Skid Steer Loaders	1	10.00	45	0.37
Year 5 Month 4	Tractors/Loaders/Backhoes	3	10.00	67	0.37
Year 5 Month 4	Welders	2	10.00	48	0.45
Year 5 Month 4	Welders	9	10.00	42	0.45
Year 5 Month 5	Aerial Lifts	1	10.00	60	0.31
Year 5 Month 5	Aerial Lifts	1	10.00	24	0.31
Year 5 Month 5	Air Compressors	2	10.00	50	0.48
Year 5 Month 5	Cranes	6	10.00	226	0.29
Year 5 Month 5	Cranes	1	10.00	62	0.29

Year 5 Month 5	Cranes	1	10.00	150	0.29
Year 5 Month 5	Crawler Tractors	8	10.00	232	0.43
Year 5 Month 5	Crawler Tractors	2	10.00	585	0.43
Year 5 Month 5	Crawler Tractors	2	10.00	207	0.43
Year 5 Month 5	Forklifts	2	10.00	73	0.20
Year 5 Month 5	Generator Sets	4	10.00	18	0.74
Year 5 Month 5	Graders	2	10.00	259	0.41
Year 5 Month 5	Other Construction Equipment	2	10.00	407	0.42
Year 5 Month 5	Other Construction Equipment	13	10.00	180	0.42
Year 5 Month 5	Other Construction Equipment	7	10.00	210	0.42
Year 5 Month 5	Other Construction Equipment	2	10.00	50	0.42
Year 5 Month 5	Other Construction Equipment	12	10.00	130	0.42
Year 5 Month 5	Other Construction Equipment	2	10.00	305	0.42
Year 5 Month 5	Other Construction Equipment	1	10.00	273	0.42
Year 5 Month 5	Plate Compactors	1	10.00	33	0.43
Year 5 Month 5	Plate Compactors	1	10.00	14	0.43
Year 5 Month 5	Plate Compactors	1	10.00	3	0.43
Year 5 Month 5	Rubber Tired Loaders	1	10.00	125	0.36
Year 5 Month 5	Rubber Tired Loaders	1	10.00	160	0.36
Year 5 Month 5	Skid Steer Loaders	1	10.00	45	0.37
Year 5 Month 5	Tractors/Loaders/Backhoes	2	10.00	67	0.37
Year 5 Month 5	Welders	4	10.00	48	0.45
Year 5 Month 5	Welders	9	10.00	42	0.45
Year 5 Month 6	Aerial Lifts	1	10.00	60	0.31
Year 5 Month 6	Aerial Lifts	1	10.00	24	0.31
Year 5 Month 6	Air Compressors	2	10.00	50	0.48
Year 5 Month 6	Cranes	5	10.00	226	0.29
Year 5 Month 6	Cranes	2	10.00	62	0.29

Year 5 Month 6	Cranes	1	10.00	150	0.29
Year 5 Month 6	Crawler Tractors	8	10.00	232	0.43
Year 5 Month 6	Crawler Tractors	2	10.00	585	0.43
Year 5 Month 6	Crawler Tractors	2	10.00	207	0.43
Year 5 Month 6	Forklifts	2	10.00	73	0.20
Year 5 Month 6	Generator Sets	4	10.00	18	0.74
Year 5 Month 6	Graders	2	10.00	259	0.41
Year 5 Month 6	Other Construction Equipment	2	10.00	407	0.42
Year 5 Month 6	Other Construction Equipment	10	10.00	180	0.42
Year 5 Month 6	Other Construction Equipment	4	10.00	210	0.42
Year 5 Month 6	Other Construction Equipment	2	10.00	50	0.42
Year 5 Month 6	Other Construction Equipment	12	10.00	130	0.42
Year 5 Month 6	Other Construction Equipment	3	10.00	305	0.42
Year 5 Month 6	Other Construction Equipment	1	10.00	273	0.42
Year 5 Month 6	Plate Compactors	1	10.00	33	0.43
Year 5 Month 6	Plate Compactors	1	10.00	14	0.43
Year 5 Month 6	Plate Compactors	1	10.00	3	0.43
Year 5 Month 6	Rubber Tired Loaders	1	10.00	125	0.36
Year 5 Month 6	Rubber Tired Loaders	1	10.00	160	0.36
Year 5 Month 6	Skid Steer Loaders	1	10.00	45	0.37
Year 5 Month 6	Tractors/Loaders/Backhoes	2	10.00	67	0.37
Year 5 Month 6	Welders	4	10.00	48	0.45
Year 5 Month 6	Welders	8	10.00	42	0.45
Year 5 Month 7	Aerial Lifts	1	10.00	60	0.31
Year 5 Month 7	Aerial Lifts	1	10.00	24	0.31
Year 5 Month 7	Air Compressors	2	10.00	50	0.48
Year 5 Month 7	Cranes	5	10.00	226	0.29
Year 5 Month 7	Cranes	2	10.00	62	0.29

Year 5 Month 7	Cranes	1	10.00	150	0.29
Year 5 Month 7	Crawler Tractors	7	10.00	232	0.43
Year 5 Month 7	Crawler Tractors	2	10.00	585	0.43
Year 5 Month 7	Crawler Tractors	2	10.00	207	0.43
Year 5 Month 7	Forklifts	2	10.00	73	0.20
Year 5 Month 7	Generator Sets	4	10.00	18	0.74
Year 5 Month 7	Graders	2	10.00	259	0.41
Year 5 Month 7	Other Construction Equipment	2	10.00	407	0.42
Year 5 Month 7	Other Construction Equipment	9	10.00	180	0.42
Year 5 Month 7	Other Construction Equipment	4	10.00	210	0.42
Year 5 Month 7	Other Construction Equipment	2	10.00	50	0.42
Year 5 Month 7	Other Construction Equipment	11	10.00	130	0.42
Year 5 Month 7	Other Construction Equipment	3	10.00	305	0.42
Year 5 Month 7	Other Construction Equipment	1	10.00	273	0.42
Year 5 Month 7	Plate Compactors	1	10.00	14	0.43
Year 5 Month 7	Plate Compactors	1	10.00	3	0.43
Year 5 Month 7	Rubber Tired Loaders	1	10.00	125	0.36
Year 5 Month 7	Skid Steer Loaders	1	10.00	45	0.37
Year 5 Month 7	Tractors/Loaders/Backhoes	1	10.00	67	0.37
Year 5 Month 7	Welders	4	10.00	48	0.45
Year 5 Month 7	Welders	8	10.00	42	0.45
Year 5 Month 8	Aerial Lifts	1	10.00	60	0.31
Year 5 Month 8	Aerial Lifts	1	10.00	24	0.31
Year 5 Month 8	Air Compressors	1	10.00	50	0.48
Year 5 Month 8	Cranes	5	10.00	226	0.29
Year 5 Month 8	Cranes	2	10.00	62	0.29
Year 5 Month 8	Cranes	1	10.00	150	0.29
Year 5 Month 8	Crawler Tractors	7	10.00	232	0.43

Year 5 Month 8	Crawler Tractors	2	10.00	585	0.43
Year 5 Month 8	Crawler Tractors	2	10.00	207	0.43
Year 5 Month 8	Forklifts	2	10.00	73	0.20
Year 5 Month 8	Generator Sets	3	10.00	18	0.74
Year 5 Month 8	Graders	2	10.00	259	0.41
Year 5 Month 8	Other Construction Equipment	2	10.00	407	0.42
Year 5 Month 8	Other Construction Equipment	9	10.00	180	0.42
Year 5 Month 8	Other Construction Equipment	4	10.00	210	0.42
Year 5 Month 8	Other Construction Equipment	2	10.00	50	0.42
Year 5 Month 8	Other Construction Equipment	11	10.00	130	0.42
Year 5 Month 8	Other Construction Equipment	2	10.00	305	0.42
Year 5 Month 8	Other Construction Equipment	1	10.00	273	0.42
Year 5 Month 8	Plate Compactors	1	10.00	14	0.43
Year 5 Month 8	Plate Compactors	1	10.00	3	0.43
Year 5 Month 8	Rubber Tired Loaders	1	10.00	125	0.36
Year 5 Month 8	Skid Steer Loaders	1	10.00	45	0.37
Year 5 Month 8	Tractors/Loaders/Backhoes	1	10.00	67	0.37
Year 5 Month 8	Welders	4	10.00	48	0.45
Year 5 Month 8	Welders	8	10.00	42	0.45
Year 5 Month 9	Aerial Lifts	1	10.00	60	0.31
Year 5 Month 9	Aerial Lifts	1	10.00	24	0.31
Year 5 Month 9	Air Compressors	1	10.00	50	0.48
Year 5 Month 9	Cranes	3	10.00	226	0.29
Year 5 Month 9	Cranes	1	10.00	62	0.29
Year 5 Month 9	Cranes	1	10.00	150	0.29
Year 5 Month 9	Crawler Tractors	7	10.00	232	0.43
Year 5 Month 9	Crawler Tractors	2	10.00	585	0.43
Year 5 Month 9	Crawler Tractors	2	10.00	207	0.43

Year 5 Month 9	Forklifts	2	10.00	73	0.20
Year 5 Month 9	Generator Sets	3	10.00	18	0.74
Year 5 Month 9	Graders	2	10.00	259	0.41
Year 5 Month 9	Other Construction Equipment	2	10.00	407	0.42
Year 5 Month 9	Other Construction Equipment	8	10.00	180	0.42
Year 5 Month 9	Other Construction Equipment	3	10.00	210	0.42
Year 5 Month 9	Other Construction Equipment	2	10.00	50	0.42
Year 5 Month 9	Other Construction Equipment	10	10.00	130	0.42
Year 5 Month 9	Other Construction Equipment	2	10.00	305	0.42
Year 5 Month 9	Other Construction Equipment	1	10.00	273	0.42
Year 5 Month 9	Plate Compactors	1	10.00	14	0.43
Year 5 Month 9	Plate Compactors	1	10.00	3	0.43
Year 5 Month 9	Rubber Tired Loaders	1	10.00	125	0.36
Year 5 Month 9	Skid Steer Loaders	1	10.00	45	0.37
Year 5 Month 9	Tractors/Loaders/Backhoes	1	10.00	67	0.37
Year 5 Month 9	Welders	4	10.00	48	0.45
Year 5 Month 9	Welders	6	10.00	42	0.45
Year 5 Month 10	Aerial Lifts	1	10.00	60	0.31
Year 5 Month 10	Aerial Lifts	1	10.00	24	0.31
Year 5 Month 10	Air Compressors	1	10.00	50	0.48
Year 5 Month 10	Cranes	3	10.00	226	0.29
Year 5 Month 10	Cranes	1	10.00	62	0.29
Year 5 Month 10	Crawler Tractors	7	10.00	232	0.43
Year 5 Month 10	Crawler Tractors	2	10.00	585	0.43
Year 5 Month 10	Crawler Tractors	2	10.00	207	0.43
Year 5 Month 10	Forklifts	2	10.00	73	0.20
Year 5 Month 10	Generator Sets	3	10.00	18	0.74
Year 5 Month 10	Graders	2	10.00	259	0.41

Year 5 Month 10	Other Construction Equipment	2	10.00	407	0.42
Year 5 Month 10	Other Construction Equipment	8	10.00	180	0.42
Year 5 Month 10	Other Construction Equipment	3	10.00	210	0.42
Year 5 Month 10	Other Construction Equipment	1	10.00	50	0.42
Year 5 Month 10	Other Construction Equipment	10	10.00	130	0.42
Year 5 Month 10	Other Construction Equipment	1	10.00	273	0.42
Year 5 Month 10	Plate Compactors	1	10.00	3	0.43
Year 5 Month 10	Skid Steer Loaders	1	10.00	45	0.37
Year 5 Month 10	Tractors/Loaders/Backhoes	1	10.00	67	0.37
Year 5 Month 10	Welders	2	10.00	48	0.45
Year 5 Month 10	Welders	6	10.00	42	0.45
Year 5 Month 11	Aerial Lifts	1	10.00	60	0.31
Year 5 Month 11	Aerial Lifts	1	10.00	24	0.31
Year 5 Month 11	Air Compressors	1	10.00	50	0.48
Year 5 Month 11	Cranes	1	10.00	62	0.29
Year 5 Month 11	Crawler Tractors	7	10.00	232	0.43
Year 5 Month 11	Crawler Tractors	2	10.00	585	0.43
Year 5 Month 11	Crawler Tractors	2	10.00	207	0.43
Year 5 Month 11	Forklifts	2	10.00	73	0.20
Year 5 Month 11	Generator Sets	3	10.00	18	0.74
Year 5 Month 11	Graders	2	10.00	259	0.41
Year 5 Month 11	Other Construction Equipment	2	10.00	407	0.42
Year 5 Month 11	Other Construction Equipment	2	10.00	180	0.42
Year 5 Month 11	Other Construction Equipment	3	10.00	210	0.42
Year 5 Month 11	Other Construction Equipment	1	10.00	50	0.42
Year 5 Month 11	Other Construction Equipment	5	10.00	130	0.42
Year 5 Month 11	Other Construction Equipment	1	10.00	273	0.42
Year 5 Month 11	Plate Compactors	1	10.00	3	0.43

Year 5 Month 11	Skid Steer Loaders	1	10.00	45	0.37
Year 5 Month 11	Tractors/Loaders/Backhoes	1	10.00	67	0.37
Year 5 Month 11	Welders	1	10.00	48	0.45
Year 5 Month 12	Aerial Lifts	1	10.00	60	0.31
Year 5 Month 12	Aerial Lifts	1	10.00	24	0.31
Year 5 Month 12	Air Compressors	1	10.00	50	0.48
Year 5 Month 12	Cranes	1	10.00	62	0.29
Year 5 Month 12	Crawler Tractors	7	10.00	232	0.43
Year 5 Month 12	Crawler Tractors	2	10.00	585	0.43
Year 5 Month 12	Crawler Tractors	2	10.00	207	0.43
Year 5 Month 12	Forklifts	2	10.00	73	0.20
Year 5 Month 12	Generator Sets	3	10.00	18	0.74
Year 5 Month 12	Graders	2	10.00	259	0.41
Year 5 Month 12	Other Construction Equipment	2	10.00	407	0.42
Year 5 Month 12	Other Construction Equipment	2	10.00	180	0.42
Year 5 Month 12	Other Construction Equipment	3	10.00	210	0.42
Year 5 Month 12	Other Construction Equipment	1	10.00	50	0.42
Year 5 Month 12	Other Construction Equipment	5	10.00	130	0.42
Year 5 Month 12	Other Construction Equipment	1	10.00	273	0.42
Year 5 Month 12	Skid Steer Loaders	1	10.00	45	0.37
Year 5 Month 12	Tractors/Loaders/Backhoes	1	10.00	67	0.37
Year 5 Month 12	Welders	1	10.00	48	0.45
Year 6 Month 4	Cranes	1	10.00	226	0.29
Year 6 Month 4	Other Construction Equipment	3	10.00	210	0.42
Year 6 Month 4	Other Construction Equipment	4	10.00	180	0.42
Year 6 Month 5	Cranes	1	10.00	226	0.29
Year 6 Month 5	Other Construction Equipment	3	10.00	210	0.42
Year 6 Month 5	Other Construction Equipment	4	10.00	180	0.42

Year 7 Month 1	Rubber Tired Loaders	1	10.00	160	0.36
Year 7 Month 1	Tractors/Loaders/Backhoes	1	10.00	67	0.37
Year 7 Month 1	Crawler Tractors	1	10.00	232	0.43
Year 7 Month 1	Other Construction Equipment	1	10.00	130	0.42
Year 7 Month 1	Other Construction Equipment	1	10.00	180	0.42
Year 7 Month 2	Rubber Tired Loaders	1	10.00	160	0.36
Year 7 Month 2	Tractors/Loaders/Backhoes	1	10.00	67	0.37
Year 7 Month 2	Crawler Tractors	1	10.00	232	0.43
Year 7 Month 2	Cranes	2	10.00	226	0.29
Year 7 Month 2	Welders	2	10.00	42	0.45
Year 7 Month 2	Other Construction Equipment	2	10.00	130	0.42
Year 7 Month 2	Other Construction Equipment	2	10.00	180	0.42
Year 7 Month 3	Cranes	2	10.00	226	0.29
Year 7 Month 3	Welders	2	10.00	42	0.45
Year 7 Month 3	Other Construction Equipment	1	10.00	130	0.42
Year 7 Month 3	Other Construction Equipment	1	10.00	180	0.42
Year 7 Month 4	Cranes	2	10.00	226	0.29
Year 7 Month 4	Welders	2	10.00	42	0.45
Year 7 Month 4	Other Construction Equipment	1	10.00	130	0.42
Year 7 Month 4	Other Construction Equipment	1	10.00	180	0.42
Year 7 Month 5	Cranes	2	10.00	226	0.29
Year 7 Month 5	Welders	2	10.00	42	0.45
Year 7 Month 5	Other Construction Equipment	1	10.00	130	0.42
Year 7 Month 5	Other Construction Equipment	1	10.00	180	0.42
Year 7 Month 6	Cranes	1	10.00	226	0.29
Year 7 Month 6	Welders	1	10.00	42	0.45
Year 7 Month 6	Other Construction Equipment	1	10.00	130	0.42
Year 7 Month 6	Other Construction Equipment	1	10.00	180	0.42

Year 7 Month 7	Cranes	1	10.00	226	0.29
Year 7 Month 7	Welders	1	10.00	42	0.45
Year 7 Month 7	Other Construction Equipment	1	10.00	130	0.42
Year 7 Month 7	Other Construction Equipment	1	10.00	180	0.42
Year 7 Month 8	Cranes	1	10.00	226	0.29
Year 7 Month 8	Welders	1	10.00	42	0.45
Year 7 Month 8	Other Construction Equipment	1	10.00	130	0.42
Year 7 Month 8	Other Construction Equipment	1	10.00	180	0.42
Year 7 Month 9	Crawler Tractors	2	10.00	232	0.43
Year 7 Month 9	Crawler Tractors	1	10.00	585	0.43
Year 7 Month 9	Crawler Tractors	1	10.00	207	0.43
Year 7 Month 9	Graders	1	10.00	259	0.41
Year 7 Month 9	Other Construction Equipment	1	10.00	407	0.42
Year 7 Month 9	Other Construction Equipment	2	10.00	130	0.42
Year 7 Month 10	Crawler Tractors	2	10.00	232	0.43
Year 7 Month 10	Crawler Tractors	1	10.00	585	0.43
Year 7 Month 10	Crawler Tractors	1	10.00	207	0.43
Year 7 Month 10	Graders	1	10.00	259	0.41
Year 7 Month 10	Other Construction Equipment	1	10.00	407	0.42
Year 7 Month 10	Other Construction Equipment	2	10.00	130	0.42
Year 9 Month 4	Cranes	1	10.00	226	0.29
Year 9 Month 4	Other Construction Equipment	3	10.00	210	0.42
Year 9 Month 4	Other Construction Equipment	3	10.00	180	0.42
Year 9 Month 5	Cranes	1	10.00	226	0.29
Year 9 Month 5	Other Construction Equipment	3	10.00	210	0.42
Year 9 Month 5	Other Construction Equipment	3	10.00	180	0.42
Year 9 Month 8	Crawler Tractors	4	10.00	232	0.43
Year 9 Month 8	Crawler Tractors	1	10.00	585	0.43

Year 9 Month 8	Crawler Tractors	1	10.00	207	0.43
Year 9 Month 8	Graders	1	10.00	259	0.41
Year 9 Month 8	Other Construction Equipment	1	10.00	407	0.42
Year 9 Month 8	Other Construction Equipment	2	10.00	130	0.42
Year 9 Month 9	Crawler Tractors	4	10.00	232	0.43
Year 9 Month 9	Crawler Tractors	1	10.00	585	0.43
Year 9 Month 9	Crawler Tractors	1	10.00	207	0.43
Year 9 Month 9	Graders	1	10.00	259	0.41
Year 9 Month 9	Other Construction Equipment	1	10.00	407	0.42
Year 9 Month 9	Other Construction Equipment	2	10.00	130	0.42
Year 9 Month 10	Crawler Tractors	4	10.00	232	0.43
Year 9 Month 10	Crawler Tractors	1	10.00	585	0.43
Year 9 Month 10	Crawler Tractors	1	10.00	207	0.43
Year 9 Month 10	Graders	1	10.00	259	0.41
Year 9 Month 10	Other Construction Equipment	1	10.00	407	0.42
Year 9 Month 10	Other Construction Equipment	2	10.00	130	0.42
Year 10 Month 1	Rubber Tired Loaders	1	10.00	160	0.36
Year 10 Month 1	Crawler Tractors	1	10.00	232	0.43
Year 10 Month 2	Cranes	1	10.00	226	0.29
Year 10 Month 2	Welders	1	10.00	42	0.45
Year 10 Month 3	Cranes	1	10.00	226	0.29
Year 10 Month 3	Welders	1	10.00	42	0.45
Year 10 Month 4	Cranes	2	10.00	226	0.29
Year 10 Month 4	Welders	1	10.00	42	0.45
Year 10 Month 4	Other Construction Equipment	3	10.00	210	0.42
Year 10 Month 4	Other Construction Equipment	3	10.00	180	0.42
Year 10 Month 5	Cranes	2	10.00	226	0.29
Year 10 Month 5	Welders	1	10.00	42	0.45

Year 10 Month 5	Other Construction Equipment	3	10.00	210	0.42
Year 10 Month 5	Other Construction Equipment	3	10.00	180	0.42
Year 10 Month 6	Cranes	1	10.00	226	0.29
Year 10 Month 6	Welders	1	10.00	42	0.45
Year 10 Month 7	Cranes	1	10.00	226	0.29
Year 10 Month 7	Welders	1	10.00	42	0.45
Year 10 Month 8	Cranes	1	10.00	226	0.29
Year 10 Month 8	Welders	1	10.00	42	0.45
Year 10 Month 8	Crawler Tractors	1	10.00	232	0.43
Year 10 Month 8	Other Construction Equipment	1	10.00	130	0.42
Year 10 Month 9	Crawler Tractors	1	10.00	232	0.43
Year 10 Month 9	Other Construction Equipment	1	10.00	130	0.42
Year 10 Month 10	Crawler Tractors	1	10.00	232	0.43
Year 10 Month 10	Other Construction Equipment	1	10.00	130	0.42
Year 11 Month 1	Rubber Tired Loaders	1	10.00	160	0.36
Year 11 Month 1	Crawler Tractors	1	10.00	232	0.43
Year 11 Month 1	Tractors/Loaders/Backhoes	1	10.00	67	0.37
Year 11 Month 1	Other Construction Equipment	1	10.00	130	0.42
Year 11 Month 1	Other Construction Equipment	1	10.00	180	0.42
Year 11 Month 2	Rubber Tired Loaders	1	10.00	160	0.36
Year 11 Month 2	Crawler Tractors	1	10.00	232	0.43
Year 11 Month 2	Tractors/Loaders/Backhoes	1	10.00	67	0.37
Year 11 Month 2	Other Construction Equipment	2	10.00	130	0.42
Year 11 Month 2	Other Construction Equipment	2	10.00	180	0.42
Year 11 Month 2	Cranes	2	10.00	226	0.29
Year 11 Month 2	Welders	2	10.00	42	0.45
Year 11 Month 3	Rubber Tired Loaders	1	10.00	160	0.36
Year 11 Month 3	Crawler Tractors	1	10.00	232	0.43

Year 11 Month 3	Tractors/Loaders/Backhoes	1	10.00	67	0.37
Year 11 Month 3	Other Construction Equipment	2	10.00	130	0.42
Year 11 Month 3	Other Construction Equipment	2	10.00	180	0.42
Year 11 Month 3	Cranes	2	10.00	226	0.29
Year 11 Month 3	Welders	2	10.00	42	0.45
Year 11 Month 4	Other Construction Equipment	1	10.00	130	0.42
Year 11 Month 4	Other Construction Equipment	4	10.00	180	0.42
Year 11 Month 4	Cranes	3	10.00	226	0.29
Year 11 Month 4	Welders	2	10.00	42	0.45
Year 11 Month 4	Other Construction Equipment	3	10.00	210	0.42
Year 11 Month 5	Other Construction Equipment	1	10.00	130	0.42
Year 11 Month 5	Other Construction Equipment	1	10.00	180	0.42
Year 11 Month 5	Cranes	2	10.00	226	0.29
Year 11 Month 5	Welders	2	10.00	42	0.45
Year 11 Month 6	Other Construction Equipment	1	10.00	130	0.42
Year 11 Month 6	Other Construction Equipment	1	10.00	180	0.42
Year 11 Month 6	Cranes	2	10.00	226	0.29
Year 11 Month 6	Welders	2	10.00	42	0.45
Year 11 Month 7	Other Construction Equipment	1	10.00	130	0.42
Year 11 Month 7	Other Construction Equipment	1	10.00	180	0.42
Year 11 Month 7	Cranes	1	10.00	226	0.29
Year 11 Month 7	Welders	1	10.00	42	0.45
Year 11 Month 8	Other Construction Equipment	1	10.00	130	0.42
Year 11 Month 8	Other Construction Equipment	1	10.00	180	0.42
Year 11 Month 8	Cranes	1	10.00	226	0.29
Year 11 Month 8	Welders	1	10.00	42	0.45
Year 11 Month 9	Crawler Tractors	2	10.00	232	0.43
Year 11 Month 9	Crawler Tractors	1	10.00	585	0.43

Year 11 Month 9	Crawler Tractors	1	10.00	207	0.43
Year 11 Month 9	Graders	1	10.00	259	0.41
Year 11 Month 9	Other Construction Equipment	1	10.00	407	0.42
Year 11 Month 9	Other Construction Equipment	2	10.00	130	0.42
Year 11 Month 10	Crawler Tractors	2	10.00	232	0.43
Year 11 Month 10	Crawler Tractors	1	10.00	585	0.43
Year 11 Month 10	Crawler Tractors	1	10.00	207	0.43
Year 11 Month 10	Graders	1	10.00	259	0.41
Year 11 Month 10	Other Construction Equipment	1	10.00	407	0.42
Year 11 Month 10	Other Construction Equipment	2	10.00	130	0.42

Trips and VMT

Phase Name	Offroad Equipment Count	Worker Trip Number	Vendor Trip Number	Hauling Trip Number	Worker Trip Length	Vendor Trip Length	Hauling Trip Length	Worker Vehicle Class	Vendor Vehicle Class	Hauling Vehicle Class
Year 5 Month 1	50	0.00	0.00	0.00	12.30	4.60	20.00	LD_Mix	HDT_Mix	HHDT
Year 5 Month 2	78	0.00	0.00	0.00	12.30	4.60	20.00	LD_Mix	HDT_Mix	HHDT
Year 5 Month 3	87	0.00	0.00	0.00	12.30	4.60	20.00	LD_Mix	HDT_Mix	HHDT
Year 5 Month 4	91	0.00	0.00	0.00	12.30	4.60	20.00	LD_Mix	HDT_Mix	HHDT
Year 5 Month 5	92	0.00	0.00	0.00	12.30	4.60	20.00	LD_Mix	HDT_Mix	HHDT
Year 5 Month 6	86	0.00	0.00	0.00	12.30	4.60	20.00	LD_Mix	HDT_Mix	HHDT
Year 5 Month 7	80	0.00	0.00	0.00	12.30	4.60	20.00	LD_Mix	HDT_Mix	HHDT
Year 5 Month 8	77	0.00	0.00	0.00	12.30	4.60	20.00	LD_Mix	HDT_Mix	HHDT
Year 5 Month 9	69	0.00	0.00	0.00	12.30	4.60	20.00	LD_Mix	HDT_Mix	HHDT
Year 5 Month 10	61	0.00	0.00	0.00	12.30	4.60	20.00	LD_Mix	HDT_Mix	HHDT
Year 5 Month 11	40	0.00	0.00	0.00	12.30	4.60	20.00	LD_Mix	HDT_Mix	HHDT
Year 5 Month 12	39	0.00	0.00	0.00	12.30	4.60	20.00	LD_Mix	HDT_Mix	HHDT
Year 6 Month 1				0.00	12.30	4.60				
Year 6 Month 2				0.00	12.30	4.60				

Year 6 Month 3				0.00	12.30	4.60				
Year 6 Month 4	8	0.00	0.00	0.00	12.30	4.60	20.00	LD_Mix	HDT_Mix	HHDT
Year 6 Month 5	8	0.00	0.00	0.00	12.30	4.60	20.00	LD_Mix	HDT_Mix	HHDT
Year 6 Month 6				0.00	12.30	4.60				
Year 6 Month 7				0.00	12.30	4.60				
Year 6 Month 8				0.00	12.30	4.60				
Year 6 Month 9				0.00	12.30	4.60				
Year 6 Month 10				0.00	12.30	4.60				
Year 6 Month 11				0.00	12.30	4.60				
Year 6 Month 12				0.00	12.30	4.60				
Year 7 Month 1	5	0.00	0.00	0.00	12.30	4.60	20.00	LD_Mix	HDT_Mix	HHDT
Year 7 Month 2	11	0.00	0.00	0.00	12.30	4.60	20.00	LD_Mix	HDT_Mix	HHDT
Year 7 Month 3	6	0.00	0.00	0.00	12.30	4.60	20.00	LD_Mix	HDT_Mix	HHDT
Year 7 Month 4	6	0.00	0.00	0.00	12.30	4.60	20.00	LD_Mix	HDT_Mix	HHDT
Year 7 Month 5	6	0.00	0.00	0.00	12.30	4.60	20.00	LD_Mix	HDT_Mix	HHDT
Year 7 Month 6	4	0.00	0.00	0.00	12.30	4.60	20.00	LD_Mix	HDT_Mix	HHDT
Year 7 Month 7	4	0.00	0.00	0.00	12.30	4.60	20.00	LD_Mix	HDT_Mix	HHDT
Year 7 Month 8	4	0.00	0.00	0.00	12.30	4.60	20.00	LD_Mix	HDT_Mix	HHDT
Year 7 Month 9	8	0.00	0.00	0.00	12.30	4.60	20.00	LD_Mix	HDT_Mix	HHDT
Year 7 Month 10	8	0.00	0.00	0.00	12.30	4.60	20.00	LD_Mix	HDT_Mix	HHDT
Year 7 Month 11				0.00	12.30	4.60				
Year 7 Month 12				0.00	12.30	4.60				
Year 8 Month 1				0.00	12.30	4.60				
Year 8 Month 2				0.00	12.30	4.60				
Year 8 Month 3				0.00	12.30	4.60				
Year 8 Month 4				0.00	12.30	4.60				
Year 8 Month 5				0.00	12.30	4.60				
Year 8 Month 6				0.00	12.30	4.60				

Year 8 Month 7				0.00	12.30	4.60				
Year 8 Month 8				0.00	12.30	4.60				
Year 8 Month 9				0.00	12.30	4.60				
Year 8 Month 10				0.00	12.30	4.60				
Year 8 Month 11				0.00	12.30	4.60				
Year 8 Month 12				0.00	12.30	4.60				
Year 9 Month 1				0.00	12.30	4.60				
Year 9 Month 2				0.00	12.30	4.60				
Year 9 Month 3				0.00	12.30	4.60				
Year 9 Month 6				0.00	12.30	4.60				
Year 9 Month 7				0.00	12.30	4.60				
Year 9 Month 4	7	0.00	0.00	0.00	12.30	4.60	20.00	LD_Mix	HDT_Mix	HHDT
Year 9 Month 5	7	0.00	0.00	0.00	12.30	4.60	20.00	LD_Mix	HDT_Mix	HHDT
Year 9 Month 11				0.00	12.30	4.60				
Year 9 Month 12				0.00	12.30	4.60				
Year 9 Month 8	10	0.00	0.00	0.00	12.30	4.60	20.00	LD_Mix	HDT_Mix	HHDT
Year 9 Month 9	10	0.00	0.00	0.00	12.30	4.60	20.00	LD_Mix	HDT_Mix	HHDT
Year 9 Month 10	10	0.00	0.00	0.00	12.30	4.60	20.00	LD_Mix	HDT_Mix	HHDT
Year 10 Month 11				0.00	12.30	4.60				
Year 10 Month 12				0.00	12.30	4.60				
Year 10 Month 1	2	0.00	0.00	0.00	12.30	4.60	20.00	LD_Mix	HDT_Mix	HHDT
Year 10 Month 2	2	0.00	0.00	0.00	12.30	4.60	20.00	LD_Mix	HDT_Mix	HHDT
Year 10 Month 3	2	0.00	0.00	0.00	12.30	4.60	20.00	LD_Mix	HDT_Mix	HHDT
Year 10 Month 4	9	0.00	0.00	0.00	12.30	4.60	20.00	LD_Mix	HDT_Mix	HHDT
Year 10 Month 5	9	0.00	0.00	0.00	12.30	4.60	20.00	LD_Mix	HDT_Mix	HHDT
Year 10 Month 6	2	0.00	0.00	0.00	12.30	4.60	20.00	LD_Mix	HDT_Mix	HHDT
Year 10 Month 7	2	0.00	0.00	0.00	12.30	4.60	20.00	LD_Mix	HDT_Mix	HHDT
Year 10 Month 8	4	0.00	0.00	0.00	12.30	4.60	20.00	LD_Mix	HDT_Mix	HHDT

Year 10 Month 9	2	0.00	0.00	0.00	12.30	4.60	20.00	LD_Mix	HDT_Mix	HHDT
Year 10 Month 10	2	0.00	0.00	0.00	12.30	4.60	20.00	LD_Mix	HDT_Mix	HHDT
Year 11 Month 11				0.00	12.30	4.60				
Year 11 Month 12				0.00	12.30	4.60				
Year 11 Month 1	5	0.00	0.00	0.00	12.30	4.60	20.00	LD_Mix	HDT_Mix	HHDT
Year 11 Month 2	11	0.00	0.00	0.00	12.30	4.60	20.00	LD_Mix	HDT_Mix	HHDT
Year 11 Month 3	11	0.00	0.00	0.00	12.30	4.60	20.00	LD_Mix	HDT_Mix	HHDT
Year 11 Month 4	13	0.00	0.00	0.00	12.30	4.60	20.00	LD_Mix	HDT_Mix	HHDT
Year 11 Month 5	6	0.00	0.00	0.00	12.30	4.60	20.00	LD_Mix	HDT_Mix	HHDT
Year 11 Month 6	6	0.00	0.00	0.00	12.30	4.60	20.00	LD_Mix	HDT_Mix	HHDT
Year 11 Month 7	4	0.00	0.00	0.00	12.30	4.60	20.00	LD_Mix	HDT_Mix	HHDT
Year 11 Month 8	4	0.00	0.00	0.00	12.30	4.60	20.00	LD_Mix	HDT_Mix	HHDT
Year 11 Month 9	8	0.00	0.00	0.00	12.30	4.60	20.00	LD_Mix	HDT_Mix	HHDT
Year 11 Month 10	8	0.00	0.00	0.00	12.30	4.60	20.00	LD_Mix	HDT_Mix	HHDT

3.1 Mitigation Measures Construction

Use Cleaner Engines for Construction Equipment

Clean Paved Roads

3.2 Year 5 Month 1 - 2024

Unmitigated Construction On-Site

	ROG	NOx	CO	SO2	Fugitive PM10	Exhaust PM10	PM10 Total	Fugitive PM2.5	Exhaust PM2.5	PM2.5 Total	Bio- CO2	NBio- CO2	Total CO2	CH4	N2O	CO2e
Category	tons/yr										MT/yr					
Off-Road	0.2284	2.2000	1.6590	4.4600e-003		0.0912	0.0912		0.0843	0.0843	0.0000	388.4356	388.4356	0.1226	0.0000	391.0101
Total	**0.2284**	**2.2000**	**1.6590**	**4.4600e-003**		**0.0912**	**0.0912**		**0.0843**	**0.0843**	**0.0000**	**388.4356**	**388.4356**	**0.1226**	**0.0000**	**391.0101**

Unmitigated Construction Off-Site

	ROG	NOx	CO	SO2	Fugitive PM10	Exhaust PM10	PM10 Total	Fugitive PM2.5	Exhaust PM2.5	PM2.5 Total	Bio- CO2	NBio- CO2	Total CO2	CH4	N2O	CO2e
Category	tons/yr										MT/yr					
Hauling	0.0000	0.0000	0.0000	0.0000	0.0000	0.0000	0.0000	0.0000	0.0000	0.0000	0.0000	0.0000	0.0000	0.0000	0.0000	0.0000
Vendor	0.0000	0.0000	0.0000	0.0000	0.0000	0.0000	0.0000	0.0000	0.0000	0.0000	0.0000	0.0000	0.0000	0.0000	0.0000	0.0000
Worker	0.0000	0.0000	0.0000	0.0000	0.0000	0.0000	0.0000	0.0000	0.0000	0.0000	0.0000	0.0000	0.0000	0.0000	0.0000	0.0000
Total	**0.0000**	**0.0000**	**0.0000**	**0.0000**	**0.0000**	**0.0000**	**0.0000**	**0.0000**	**0.0000**	**0.0000**	**0.0000**	**0.0000**	**0.0000**	**0.0000**	**0.0000**	**0.0000**

3.2 Year 5 Month 1 - 2024

Mitigated Construction On-Site

	ROG	NOx	CO	SO2	Fugitive PM10	Exhaust PM10	PM10 Total	Fugitive PM2.5	Exhaust PM2.5	PM2.5 Total	Bio- CO2	NBio- CO2	Total CO2	CH4	N2O	CO2e
Category	tons/yr										MT/yr					
Off-Road	0.0565	0.3684	2.2794	4.4600e-003		7.0900e-003	7.0900e-003		7.0900e-003	7.0900e-003	0.0000	388.4352	388.4352	0.1226	0.0000	391.0096
Total	**0.0565**	**0.3684**	**2.2794**	**4.4600e-003**		**7.0900e-003**	**7.0900e-003**		**7.0900e-003**	**7.0900e-003**	**0.0000**	**388.4352**	**388.4352**	**0.1226**	**0.0000**	**391.0096**

Mitigated Construction Off-Site

	ROG	NOx	CO	SO2	Fugitive PM10	Exhaust PM10	PM10 Total	Fugitive PM2.5	Exhaust PM2.5	PM2.5 Total	Bio- CO2	NBio- CO2	Total CO2	CH4	N2O	CO2e
Category	tons/yr										MT/yr					
Hauling	0.0000	0.0000	0.0000	0.0000	0.0000	0.0000	0.0000	0.0000	0.0000	0.0000	0.0000	0.0000	0.0000	0.0000	0.0000	0.0000
Vendor	0.0000	0.0000	0.0000	0.0000	0.0000	0.0000	0.0000	0.0000	0.0000	0.0000	0.0000	0.0000	0.0000	0.0000	0.0000	0.0000
Worker	0.0000	0.0000	0.0000	0.0000	0.0000	0.0000	0.0000	0.0000	0.0000	0.0000	0.0000	0.0000	0.0000	0.0000	0.0000	0.0000
Total	**0.0000**	**0.0000**	**0.0000**	**0.0000**	**0.0000**	**0.0000**	**0.0000**	**0.0000**	**0.0000**	**0.0000**	**0.0000**	**0.0000**	**0.0000**	**0.0000**	**0.0000**	**0.0000**

3.3 Year 5 Month 2 - 2024

Unmitigated Construction On-Site

	ROG	NOx	CO	SO2	Fugitive PM10	Exhaust PM10	PM10 Total	Fugitive PM2.5	Exhaust PM2.5	PM2.5 Total	Bio- CO2	NBio- CO2	Total CO2	CH4	N2O	CO2e
Category	tons/yr										MT/yr					
Off-Road	0.2885	2.6959	2.1442	5.2500e-003		0.1136	0.1136		0.1052	0.1052	0.0000	453.6974	453.6974	0.1389	0.0000	456.6143
Total	**0.2885**	**2.6959**	**2.1442**	**5.2500e-003**		**0.1136**	**0.1136**		**0.1052**	**0.1052**	**0.0000**	**453.6974**	**453.6974**	**0.1389**	**0.0000**	**456.6143**

Unmitigated Construction Off-Site

	ROG	NOx	CO	SO2	Fugitive PM10	Exhaust PM10	PM10 Total	Fugitive PM2.5	Exhaust PM2.5	PM2.5 Total	Bio- CO2	NBio- CO2	Total CO2	CH4	N2O	CO2e
Category	tons/yr										MT/yr					
Hauling	0.0000	0.0000	0.0000	0.0000	0.0000	0.0000	0.0000	0.0000	0.0000	0.0000	0.0000	0.0000	0.0000	0.0000	0.0000	0.0000
Vendor	0.0000	0.0000	0.0000	0.0000	0.0000	0.0000	0.0000	0.0000	0.0000	0.0000	0.0000	0.0000	0.0000	0.0000	0.0000	0.0000
Worker	0.0000	0.0000	0.0000	0.0000	0.0000	0.0000	0.0000	0.0000	0.0000	0.0000	0.0000	0.0000	0.0000	0.0000	0.0000	0.0000
Total	**0.0000**	**0.0000**	**0.0000**	**0.0000**	**0.0000**	**0.0000**	**0.0000**	**0.0000**	**0.0000**	**0.0000**	**0.0000**	**0.0000**	**0.0000**	**0.0000**	**0.0000**	**0.0000**

3.3 Year 5 Month 2 - 2024

Mitigated Construction On-Site

	ROG	NOx	CO	SO2	Fugitive PM10	Exhaust PM10	PM10 Total	Fugitive PM2.5	Exhaust PM2.5	PM2.5 Total	Bio- CO2	NBio- CO2	Total CO2	CH4	N2O	CO2e
Category	tons/yr										MT/yr					
Off-Road	0.0683	0.5310	2.7912	5.2500e-003		8.2500e-003	8.2500e-003		8.2500e-003	8.2500e-003	0.0000	453.6968	453.6968	0.1389	0.0000	456.6138
Total	**0.0683**	**0.5310**	**2.7912**	**5.2500e-003**		**8.2500e-003**	**8.2500e-003**		**8.2500e-003**	**8.2500e-003**	**0.0000**	**453.6968**	**453.6968**	**0.1389**	**0.0000**	**456.6138**

Mitigated Construction Off-Site

	ROG	NOx	CO	SO2	Fugitive PM10	Exhaust PM10	PM10 Total	Fugitive PM2.5	Exhaust PM2.5	PM2.5 Total	Bio- CO2	NBio- CO2	Total CO2	CH4	N2O	CO2e
Category	tons/yr										MT/yr					
Hauling	0.0000	0.0000	0.0000	0.0000	0.0000	0.0000	0.0000	0.0000	0.0000	0.0000	0.0000	0.0000	0.0000	0.0000	0.0000	0.0000
Vendor	0.0000	0.0000	0.0000	0.0000	0.0000	0.0000	0.0000	0.0000	0.0000	0.0000	0.0000	0.0000	0.0000	0.0000	0.0000	0.0000
Worker	0.0000	0.0000	0.0000	0.0000	0.0000	0.0000	0.0000	0.0000	0.0000	0.0000	0.0000	0.0000	0.0000	0.0000	0.0000	0.0000
Total	**0.0000**	**0.0000**	**0.0000**	**0.0000**	**0.0000**	**0.0000**	**0.0000**	**0.0000**	**0.0000**	**0.0000**	**0.0000**	**0.0000**	**0.0000**	**0.0000**	**0.0000**	**0.0000**

3.4 Year 5 Month 3 - 2024

Unmitigated Construction On-Site

	ROG	NOx	CO	SO2	Fugitive PM10	Exhaust PM10	PM10 Total	Fugitive PM2.5	Exhaust PM2.5	PM2.5 Total	Bio- CO2	NBio- CO2	Total CO2	CH4	N2O	CO2e
Category	tons/yr										MT/yr					
Off-Road	0.3427	3.1521	2.5491	6.2300e-003		0.1322	0.1322		0.1226	0.1226	0.0000	538.1392	538.1392	0.1637	0.0000	541.5765
Total	**0.3427**	**3.1521**	**2.5491**	**6.2300e-003**		**0.1322**	**0.1322**		**0.1226**	**0.1226**	**0.0000**	**538.1392**	**538.1392**	**0.1637**	**0.0000**	**541.5765**

Unmitigated Construction Off-Site

	ROG	NOx	CO	SO2	Fugitive PM10	Exhaust PM10	PM10 Total	Fugitive PM2.5	Exhaust PM2.5	PM2.5 Total	Bio- CO2	NBio- CO2	Total CO2	CH4	N2O	CO2e
Category	tons/yr										MT/yr					
Hauling	0.0000	0.0000	0.0000	0.0000	0.0000	0.0000	0.0000	0.0000	0.0000	0.0000	0.0000	0.0000	0.0000	0.0000	0.0000	0.0000
Vendor	0.0000	0.0000	0.0000	0.0000	0.0000	0.0000	0.0000	0.0000	0.0000	0.0000	0.0000	0.0000	0.0000	0.0000	0.0000	0.0000
Worker	0.0000	0.0000	0.0000	0.0000	0.0000	0.0000	0.0000	0.0000	0.0000	0.0000	0.0000	0.0000	0.0000	0.0000	0.0000	0.0000
Total	**0.0000**	**0.0000**	**0.0000**	**0.0000**	**0.0000**	**0.0000**	**0.0000**	**0.0000**	**0.0000**	**0.0000**	**0.0000**	**0.0000**	**0.0000**	**0.0000**	**0.0000**	**0.0000**

3.4 Year 5 Month 3 - 2024

Mitigated Construction On-Site

	ROG	NOx	CO	SO2	Fugitive PM10	Exhaust PM10	PM10 Total	Fugitive PM2.5	Exhaust PM2.5	PM2.5 Total	Bio- CO2	NBio- CO2	Total CO2	CH4	N2O	CO2e
Category	tons/yr										MT/yr					
Off-Road	0.0813	0.6613	3.2782	6.2300e-003		9.7200e-003	9.7200e-003		9.7200e-003	9.7200e-003	0.0000	538.1386	538.1386	0.1637	0.0000	541.5758
Total	**0.0813**	**0.6613**	**3.2782**	**6.2300e-003**		**9.7200e-003**	**9.7200e-003**		**9.7200e-003**	**9.7200e-003**	**0.0000**	**538.1386**	**538.1386**	**0.1637**	**0.0000**	**541.5758**

Mitigated Construction Off-Site

	ROG	NOx	CO	SO2	Fugitive PM10	Exhaust PM10	PM10 Total	Fugitive PM2.5	Exhaust PM2.5	PM2.5 Total	Bio- CO2	NBio- CO2	Total CO2	CH4	N2O	CO2e
Category	tons/yr										MT/yr					
Hauling	0.0000	0.0000	0.0000	0.0000	0.0000	0.0000	0.0000	0.0000	0.0000	0.0000	0.0000	0.0000	0.0000	0.0000	0.0000	0.0000
Vendor	0.0000	0.0000	0.0000	0.0000	0.0000	0.0000	0.0000	0.0000	0.0000	0.0000	0.0000	0.0000	0.0000	0.0000	0.0000	0.0000
Worker	0.0000	0.0000	0.0000	0.0000	0.0000	0.0000	0.0000	0.0000	0.0000	0.0000	0.0000	0.0000	0.0000	0.0000	0.0000	0.0000
Total	**0.0000**	**0.0000**	**0.0000**	**0.0000**	**0.0000**	**0.0000**	**0.0000**	**0.0000**	**0.0000**	**0.0000**	**0.0000**	**0.0000**	**0.0000**	**0.0000**	**0.0000**	**0.0000**

3.5 Year 5 Month 4 - 2024

Unmitigated Construction On-Site

	ROG	NOx	CO	SO2	Fugitive PM10	Exhaust PM10	PM10 Total	Fugitive PM2.5	Exhaust PM2.5	PM2.5 Total	Bio- CO2	NBio- CO2	Total CO2	CH4	N2O	CO2e
Category	tons/yr										MT/yr					
Off-Road	0.3348	3.0760	2.4588	6.0700e-003		0.1288	0.1288		0.1195	0.1195	0.0000	523.8430	523.8430	0.1591	0.0000	527.1832
Total	**0.3348**	**3.0760**	**2.4588**	**6.0700e-003**		**0.1288**	**0.1288**		**0.1195**	**0.1195**	**0.0000**	**523.8430**	**523.8430**	**0.1591**	**0.0000**	**527.1832**

Unmitigated Construction Off-Site

	ROG	NOx	CO	SO2	Fugitive PM10	Exhaust PM10	PM10 Total	Fugitive PM2.5	Exhaust PM2.5	PM2.5 Total	Bio- CO2	NBio- CO2	Total CO2	CH4	N2O	CO2e
Category	tons/yr										MT/yr					
Hauling	0.0000	0.0000	0.0000	0.0000	0.0000	0.0000	0.0000	0.0000	0.0000	0.0000	0.0000	0.0000	0.0000	0.0000	0.0000	0.0000
Vendor	0.0000	0.0000	0.0000	0.0000	0.0000	0.0000	0.0000	0.0000	0.0000	0.0000	0.0000	0.0000	0.0000	0.0000	0.0000	0.0000
Worker	0.0000	0.0000	0.0000	0.0000	0.0000	0.0000	0.0000	0.0000	0.0000	0.0000	0.0000	0.0000	0.0000	0.0000	0.0000	0.0000
Total	**0.0000**	**0.0000**	**0.0000**	**0.0000**	**0.0000**	**0.0000**	**0.0000**	**0.0000**	**0.0000**	**0.0000**	**0.0000**	**0.0000**	**0.0000**	**0.0000**	**0.0000**	**0.0000**

3.5 Year 5 Month 4 - 2024

Mitigated Construction On-Site

	ROG	NOx	CO	SO2	Fugitive PM10	Exhaust PM10	PM10 Total	Fugitive PM2.5	Exhaust PM2.5	PM2.5 Total	Bio- CO2	NBio- CO2	Total CO2	CH4	N2O	CO2e
Category	tons/yr										MT/yr					
Off-Road	0.0788	0.6350	3.1692	6.0700e-003		9.4600e-003	9.4600e-003		9.4600e-003	9.4600e-003	0.0000	523.8424	523.8424	0.1591	0.0000	527.1825
Total	**0.0788**	**0.6350**	**3.1692**	**6.0700e-003**		**9.4600e-003**	**9.4600e-003**		**9.4600e-003**	**9.4600e-003**	**0.0000**	**523.8424**	**523.8424**	**0.1591**	**0.0000**	**527.1825**

Mitigated Construction Off-Site

	ROG	NOx	CO	SO2	Fugitive PM10	Exhaust PM10	PM10 Total	Fugitive PM2.5	Exhaust PM2.5	PM2.5 Total	Bio- CO2	NBio- CO2	Total CO2	CH4	N2O	CO2e
Category	tons/yr										MT/yr					
Hauling	0.0000	0.0000	0.0000	0.0000	0.0000	0.0000	0.0000	0.0000	0.0000	0.0000	0.0000	0.0000	0.0000	0.0000	0.0000	0.0000
Vendor	0.0000	0.0000	0.0000	0.0000	0.0000	0.0000	0.0000	0.0000	0.0000	0.0000	0.0000	0.0000	0.0000	0.0000	0.0000	0.0000
Worker	0.0000	0.0000	0.0000	0.0000	0.0000	0.0000	0.0000	0.0000	0.0000	0.0000	0.0000	0.0000	0.0000	0.0000	0.0000	0.0000
Total	**0.0000**	**0.0000**	**0.0000**	**0.0000**	**0.0000**	**0.0000**	**0.0000**	**0.0000**	**0.0000**	**0.0000**	**0.0000**	**0.0000**	**0.0000**	**0.0000**	**0.0000**	**0.0000**

3.6 Year 5 Month 5 - 2024

Unmitigated Construction On-Site

	ROG	NOx	CO	SO2	Fugitive PM10	Exhaust PM10	PM10 Total	Fugitive PM2.5	Exhaust PM2.5	PM2.5 Total	Bio- CO2	NBio- CO2	Total CO2	CH4	N2O	CO2e
Category	tons/yr										MT/yr					
Off-Road	0.3488	3.1682	2.5566	6.2600e-003		0.1323	0.1323		0.1229	0.1229	0.0000	539.0591	539.0591	0.1621	0.0000	542.4634
Total	**0.3488**	**3.1682**	**2.5566**	**6.2600e-003**		**0.1323**	**0.1323**		**0.1229**	**0.1229**	**0.0000**	**539.0591**	**539.0591**	**0.1621**	**0.0000**	**542.4634**

Unmitigated Construction Off-Site

	ROG	NOx	CO	SO2	Fugitive PM10	Exhaust PM10	PM10 Total	Fugitive PM2.5	Exhaust PM2.5	PM2.5 Total	Bio- CO2	NBio- CO2	Total CO2	CH4	N2O	CO2e
Category	tons/yr										MT/yr					
Hauling	0.0000	0.0000	0.0000	0.0000	0.0000	0.0000	0.0000	0.0000	0.0000	0.0000	0.0000	0.0000	0.0000	0.0000	0.0000	0.0000
Vendor	0.0000	0.0000	0.0000	0.0000	0.0000	0.0000	0.0000	0.0000	0.0000	0.0000	0.0000	0.0000	0.0000	0.0000	0.0000	0.0000
Worker	0.0000	0.0000	0.0000	0.0000	0.0000	0.0000	0.0000	0.0000	0.0000	0.0000	0.0000	0.0000	0.0000	0.0000	0.0000	0.0000
Total	**0.0000**	**0.0000**	**0.0000**	**0.0000**	**0.0000**	**0.0000**	**0.0000**	**0.0000**	**0.0000**	**0.0000**	**0.0000**	**0.0000**	**0.0000**	**0.0000**	**0.0000**	**0.0000**

3.6 Year 5 Month 5 - 2024

Mitigated Construction On-Site

	ROG	NOx	CO	SO2	Fugitive PM10	Exhaust PM10	PM10 Total	Fugitive PM2.5	Exhaust PM2.5	PM2.5 Total	Bio- CO2	NBio- CO2	Total CO2	CH4	N2O	CO2e
Category	tons/yr										MT/yr					
Off-Road	0.0814	0.6695	3.2736	6.2600e-003		9.7100e-003	9.7100e-003		9.7100e-003	9.7100e-003	0.0000	539.0585	539.0585	0.1621	0.0000	542.4628
Total	**0.0814**	**0.6695**	**3.2736**	**6.2600e-003**		**9.7100e-003**	**9.7100e-003**		**9.7100e-003**	**9.7100e-003**	**0.0000**	**539.0585**	**539.0585**	**0.1621**	**0.0000**	**542.4628**

Mitigated Construction Off-Site

	ROG	NOx	CO	SO2	Fugitive PM10	Exhaust PM10	PM10 Total	Fugitive PM2.5	Exhaust PM2.5	PM2.5 Total	Bio- CO2	NBio- CO2	Total CO2	CH4	N2O	CO2e
Category	tons/yr										MT/yr					
Hauling	0.0000	0.0000	0.0000	0.0000	0.0000	0.0000	0.0000	0.0000	0.0000	0.0000	0.0000	0.0000	0.0000	0.0000	0.0000	0.0000
Vendor	0.0000	0.0000	0.0000	0.0000	0.0000	0.0000	0.0000	0.0000	0.0000	0.0000	0.0000	0.0000	0.0000	0.0000	0.0000	0.0000
Worker	0.0000	0.0000	0.0000	0.0000	0.0000	0.0000	0.0000	0.0000	0.0000	0.0000	0.0000	0.0000	0.0000	0.0000	0.0000	0.0000
Total	**0.0000**	**0.0000**	**0.0000**	**0.0000**	**0.0000**	**0.0000**	**0.0000**	**0.0000**	**0.0000**	**0.0000**	**0.0000**	**0.0000**	**0.0000**	**0.0000**	**0.0000**	**0.0000**

3.7 Year 5 Month 6 - 2024

Unmitigated Construction On-Site

	ROG	NOx	CO	SO2	Fugitive PM10	Exhaust PM10	PM10 Total	Fugitive PM2.5	Exhaust PM2.5	PM2.5 Total	Bio- CO2	NBio- CO2	Total CO2	CH4	N2O	CO2e
Category	tons/yr										MT/yr					
Off-Road	0.3233	2.9423	2.3845	5.8700e-003		0.1233	0.1233		0.1145	0.1145	0.0000	506.0657	506.0657	0.1529	0.0000	509.2774
Total	**0.3233**	**2.9423**	**2.3845**	**5.8700e-003**		**0.1233**	**0.1233**		**0.1145**	**0.1145**	**0.0000**	**506.0657**	**506.0657**	**0.1529**	**0.0000**	**509.2774**

Unmitigated Construction Off-Site

	ROG	NOx	CO	SO2	Fugitive PM10	Exhaust PM10	PM10 Total	Fugitive PM2.5	Exhaust PM2.5	PM2.5 Total	Bio- CO2	NBio- CO2	Total CO2	CH4	N2O	CO2e
Category	tons/yr										MT/yr					
Hauling	0.0000	0.0000	0.0000	0.0000	0.0000	0.0000	0.0000	0.0000	0.0000	0.0000	0.0000	0.0000	0.0000	0.0000	0.0000	0.0000
Vendor	0.0000	0.0000	0.0000	0.0000	0.0000	0.0000	0.0000	0.0000	0.0000	0.0000	0.0000	0.0000	0.0000	0.0000	0.0000	0.0000
Worker	0.0000	0.0000	0.0000	0.0000	0.0000	0.0000	0.0000	0.0000	0.0000	0.0000	0.0000	0.0000	0.0000	0.0000	0.0000	0.0000
Total	**0.0000**	**0.0000**	**0.0000**	**0.0000**	**0.0000**	**0.0000**	**0.0000**	**0.0000**	**0.0000**	**0.0000**	**0.0000**	**0.0000**	**0.0000**	**0.0000**	**0.0000**	**0.0000**

3.7 Year 5 Month 6 - 2024

Mitigated Construction On-Site

	ROG	NOx	CO	SO2	Fugitive PM10	Exhaust PM10	PM10 Total	Fugitive PM2.5	Exhaust PM2.5	PM2.5 Total	Bio- CO2	NBio- CO2	Total CO2	CH4	N2O	CO2e
Category	tons/yr										MT/yr					
Off-Road	0.0763	0.6237	3.0660	5.8700e-003		9.1200e-003	9.1200e-003		9.1200e-003	9.1200e-003	0.0000	506.0651	506.0651	0.1529	0.0000	509.2768
Total	**0.0763**	**0.6237**	**3.0660**	**5.8700e-003**		**9.1200e-003**	**9.1200e-003**		**9.1200e-003**	**9.1200e-003**	**0.0000**	**506.0651**	**506.0651**	**0.1529**	**0.0000**	**509.2768**

Mitigated Construction Off-Site

	ROG	NOx	CO	SO2	Fugitive PM10	Exhaust PM10	PM10 Total	Fugitive PM2.5	Exhaust PM2.5	PM2.5 Total	Bio- CO2	NBio- CO2	Total CO2	CH4	N2O	CO2e
Category	tons/yr										MT/yr					
Hauling	0.0000	0.0000	0.0000	0.0000	0.0000	0.0000	0.0000	0.0000	0.0000	0.0000	0.0000	0.0000	0.0000	0.0000	0.0000	0.0000
Vendor	0.0000	0.0000	0.0000	0.0000	0.0000	0.0000	0.0000	0.0000	0.0000	0.0000	0.0000	0.0000	0.0000	0.0000	0.0000	0.0000
Worker	0.0000	0.0000	0.0000	0.0000	0.0000	0.0000	0.0000	0.0000	0.0000	0.0000	0.0000	0.0000	0.0000	0.0000	0.0000	0.0000
Total	**0.0000**	**0.0000**	**0.0000**	**0.0000**	**0.0000**	**0.0000**	**0.0000**	**0.0000**	**0.0000**	**0.0000**	**0.0000**	**0.0000**	**0.0000**	**0.0000**	**0.0000**	**0.0000**

3.8 Year 5 Month 7 - 2024

Unmitigated Construction On-Site

	ROG	NOx	CO	SO2	Fugitive PM10	Exhaust PM10	PM10 Total	Fugitive PM2.5	Exhaust PM2.5	PM2.5 Total	Bio- CO2	NBio- CO2	Total CO2	CH4	N2O	CO2e
Category	tons/yr										MT/yr					
Off-Road	0.3312	2.9999	2.4010	6.0000e-003		0.1252	0.1252		0.1163	0.1163	0.0000	516.4134	516.4134	0.1554	0.0000	519.6773
Total	**0.3312**	**2.9999**	**2.4010**	**6.0000e-003**		**0.1252**	**0.1252**		**0.1163**	**0.1163**	**0.0000**	**516.4134**	**516.4134**	**0.1554**	**0.0000**	**519.6773**

Unmitigated Construction Off-Site

	ROG	NOx	CO	SO2	Fugitive PM10	Exhaust PM10	PM10 Total	Fugitive PM2.5	Exhaust PM2.5	PM2.5 Total	Bio- CO2	NBio- CO2	Total CO2	CH4	N2O	CO2e
Category	tons/yr										MT/yr					
Hauling	0.0000	0.0000	0.0000	0.0000	0.0000	0.0000	0.0000	0.0000	0.0000	0.0000	0.0000	0.0000	0.0000	0.0000	0.0000	0.0000
Vendor	0.0000	0.0000	0.0000	0.0000	0.0000	0.0000	0.0000	0.0000	0.0000	0.0000	0.0000	0.0000	0.0000	0.0000	0.0000	0.0000
Worker	0.0000	0.0000	0.0000	0.0000	0.0000	0.0000	0.0000	0.0000	0.0000	0.0000	0.0000	0.0000	0.0000	0.0000	0.0000	0.0000
Total	**0.0000**	**0.0000**	**0.0000**	**0.0000**	**0.0000**	**0.0000**	**0.0000**	**0.0000**	**0.0000**	**0.0000**	**0.0000**	**0.0000**	**0.0000**	**0.0000**	**0.0000**	**0.0000**

3.8 Year 5 Month 7 - 2024

Mitigated Construction On-Site

	ROG	NOx	CO	SO2	Fugitive PM10	Exhaust PM10	PM10 Total	Fugitive PM2.5	Exhaust PM2.5	PM2.5 Total	Bio- CO2	NBio- CO2	Total CO2	CH4	N2O	CO2e
Category	tons/yr										MT/yr					
Off-Road	0.0778	0.6369	3.0951	6.0000e-003		9.2900e-003	9.2900e-003		9.2900e-003	9.2900e-003	0.0000	516.4127	516.4127	0.1554	0.0000	519.6767
Total	**0.0778**	**0.6369**	**3.0951**	**6.0000e-003**		**9.2900e-003**	**9.2900e-003**		**9.2900e-003**	**9.2900e-003**	**0.0000**	**516.4127**	**516.4127**	**0.1554**	**0.0000**	**519.6767**

Mitigated Construction Off-Site

	ROG	NOx	CO	SO2	Fugitive PM10	Exhaust PM10	PM10 Total	Fugitive PM2.5	Exhaust PM2.5	PM2.5 Total	Bio- CO2	NBio- CO2	Total CO2	CH4	N2O	CO2e
Category	tons/yr										MT/yr					
Hauling	0.0000	0.0000	0.0000	0.0000	0.0000	0.0000	0.0000	0.0000	0.0000	0.0000	0.0000	0.0000	0.0000	0.0000	0.0000	0.0000
Vendor	0.0000	0.0000	0.0000	0.0000	0.0000	0.0000	0.0000	0.0000	0.0000	0.0000	0.0000	0.0000	0.0000	0.0000	0.0000	0.0000
Worker	0.0000	0.0000	0.0000	0.0000	0.0000	0.0000	0.0000	0.0000	0.0000	0.0000	0.0000	0.0000	0.0000	0.0000	0.0000	0.0000
Total	**0.0000**	**0.0000**	**0.0000**	**0.0000**	**0.0000**	**0.0000**	**0.0000**	**0.0000**	**0.0000**	**0.0000**	**0.0000**	**0.0000**	**0.0000**	**0.0000**	**0.0000**	**0.0000**

3.9 Year 5 Month 8 - 2024

Unmitigated Construction On-Site

	ROG	NOx	CO	SO2	Fugitive PM10	Exhaust PM10	PM10 Total	Fugitive PM2.5	Exhaust PM2.5	PM2.5 Total	Bio- CO2	NBio- CO2	Total CO2	CH4	N2O	CO2e
Category	tons/yr										MT/yr					
Off-Road	0.3167	2.8908	2.3040	5.7300e-003		0.1210	0.1210		0.1124	0.1124	0.0000	494.2068	494.2068	0.1495	0.0000	497.3456
Total	**0.3167**	**2.8908**	**2.3040**	**5.7300e-003**		**0.1210**	**0.1210**		**0.1124**	**0.1124**	**0.0000**	**494.2068**	**494.2068**	**0.1495**	**0.0000**	**497.3456**

Unmitigated Construction Off-Site

	ROG	NOx	CO	SO2	Fugitive PM10	Exhaust PM10	PM10 Total	Fugitive PM2.5	Exhaust PM2.5	PM2.5 Total	Bio- CO2	NBio- CO2	Total CO2	CH4	N2O	CO2e
Category	tons/yr										MT/yr					
Hauling	0.0000	0.0000	0.0000	0.0000	0.0000	0.0000	0.0000	0.0000	0.0000	0.0000	0.0000	0.0000	0.0000	0.0000	0.0000	0.0000
Vendor	0.0000	0.0000	0.0000	0.0000	0.0000	0.0000	0.0000	0.0000	0.0000	0.0000	0.0000	0.0000	0.0000	0.0000	0.0000	0.0000
Worker	0.0000	0.0000	0.0000	0.0000	0.0000	0.0000	0.0000	0.0000	0.0000	0.0000	0.0000	0.0000	0.0000	0.0000	0.0000	0.0000
Total	**0.0000**	**0.0000**	**0.0000**	**0.0000**	**0.0000**	**0.0000**	**0.0000**	**0.0000**	**0.0000**	**0.0000**	**0.0000**	**0.0000**	**0.0000**	**0.0000**	**0.0000**	**0.0000**

3.9 Year 5 Month 8 - 2024

Mitigated Construction On-Site

	ROG	NOx	CO	SO2	Fugitive PM10	Exhaust PM10	PM10 Total	Fugitive PM2.5	Exhaust PM2.5	PM2.5 Total	Bio- CO2	NBio- CO2	Total CO2	CH4	N2O	CO2e
Category	tons/yr										MT/yr					
Off-Road	0.0746	0.6075	2.9848	5.7300e-003		8.9300e-003	8.9300e-003		8.9300e-003	8.9300e-003	0.0000	494.2062	494.2062	0.1495	0.0000	497.3450
Total	**0.0746**	**0.6075**	**2.9848**	**5.7300e-003**		**8.9300e-003**	**8.9300e-003**		**8.9300e-003**	**8.9300e-003**	**0.0000**	**494.2062**	**494.2062**	**0.1495**	**0.0000**	**497.3450**

Mitigated Construction Off-Site

	ROG	NOx	CO	SO2	Fugitive PM10	Exhaust PM10	PM10 Total	Fugitive PM2.5	Exhaust PM2.5	PM2.5 Total	Bio- CO2	NBio- CO2	Total CO2	CH4	N2O	CO2e
Category	tons/yr										MT/yr					
Hauling	0.0000	0.0000	0.0000	0.0000	0.0000	0.0000	0.0000	0.0000	0.0000	0.0000	0.0000	0.0000	0.0000	0.0000	0.0000	0.0000
Vendor	0.0000	0.0000	0.0000	0.0000	0.0000	0.0000	0.0000	0.0000	0.0000	0.0000	0.0000	0.0000	0.0000	0.0000	0.0000	0.0000
Worker	0.0000	0.0000	0.0000	0.0000	0.0000	0.0000	0.0000	0.0000	0.0000	0.0000	0.0000	0.0000	0.0000	0.0000	0.0000	0.0000
Total	**0.0000**	**0.0000**	**0.0000**	**0.0000**	**0.0000**	**0.0000**	**0.0000**	**0.0000**	**0.0000**	**0.0000**	**0.0000**	**0.0000**	**0.0000**	**0.0000**	**0.0000**	**0.0000**

3.10 Year 5 Month 9 - 2024

Unmitigated Construction On-Site

	ROG	NOx	CO	SO2	Fugitive PM10	Exhaust PM10	PM10 Total	Fugitive PM2.5	Exhaust PM2.5	PM2.5 Total	Bio- CO2	NBio- CO2	Total CO2	CH4	N2O	CO2e
Category	tons/yr										MT/yr					
Off-Road	0.2699	2.4694	1.9648	4.9600e-003		0.1028	0.1028		0.0954	0.0954	0.0000	428.2080	428.2080	0.1301	0.0000	430.9396
Total	**0.2699**	**2.4694**	**1.9648**	**4.9600e-003**		**0.1028**	**0.1028**		**0.0954**	**0.0954**	**0.0000**	**428.2080**	**428.2080**	**0.1301**	**0.0000**	**430.9396**

Unmitigated Construction Off-Site

	ROG	NOx	CO	SO2	Fugitive PM10	Exhaust PM10	PM10 Total	Fugitive PM2.5	Exhaust PM2.5	PM2.5 Total	Bio- CO2	NBio- CO2	Total CO2	CH4	N2O	CO2e
Category	tons/yr										MT/yr					
Hauling	0.0000	0.0000	0.0000	0.0000	0.0000	0.0000	0.0000	0.0000	0.0000	0.0000	0.0000	0.0000	0.0000	0.0000	0.0000	0.0000
Vendor	0.0000	0.0000	0.0000	0.0000	0.0000	0.0000	0.0000	0.0000	0.0000	0.0000	0.0000	0.0000	0.0000	0.0000	0.0000	0.0000
Worker	0.0000	0.0000	0.0000	0.0000	0.0000	0.0000	0.0000	0.0000	0.0000	0.0000	0.0000	0.0000	0.0000	0.0000	0.0000	0.0000
Total	**0.0000**	**0.0000**	**0.0000**	**0.0000**	**0.0000**	**0.0000**	**0.0000**	**0.0000**	**0.0000**	**0.0000**	**0.0000**	**0.0000**	**0.0000**	**0.0000**	**0.0000**	**0.0000**

3.10 Year 5 Month 9 - 2024

Mitigated Construction On-Site

	ROG	NOx	CO	SO2	Fugitive PM10	Exhaust PM10	PM10 Total	Fugitive PM2.5	Exhaust PM2.5	PM2.5 Total	Bio- CO2	NBio- CO2	Total CO2	CH4	N2O	CO2e
Category	tons/yr										MT/yr					
Off-Road	0.0642	0.5069	2.5676	4.9600e-003		7.7400e-003	7.7400e-003		7.7400e-003	7.7400e-003	0.0000	428.2074	428.2074	0.1301	0.0000	430.9391
Total	**0.0642**	**0.5069**	**2.5676**	**4.9600e-003**		**7.7400e-003**	**7.7400e-003**		**7.7400e-003**	**7.7400e-003**	**0.0000**	**428.2074**	**428.2074**	**0.1301**	**0.0000**	**430.9391**

Mitigated Construction Off-Site

	ROG	NOx	CO	SO2	Fugitive PM10	Exhaust PM10	PM10 Total	Fugitive PM2.5	Exhaust PM2.5	PM2.5 Total	Bio- CO2	NBio- CO2	Total CO2	CH4	N2O	CO2e
Category	tons/yr										MT/yr					
Hauling	0.0000	0.0000	0.0000	0.0000	0.0000	0.0000	0.0000	0.0000	0.0000	0.0000	0.0000	0.0000	0.0000	0.0000	0.0000	0.0000
Vendor	0.0000	0.0000	0.0000	0.0000	0.0000	0.0000	0.0000	0.0000	0.0000	0.0000	0.0000	0.0000	0.0000	0.0000	0.0000	0.0000
Worker	0.0000	0.0000	0.0000	0.0000	0.0000	0.0000	0.0000	0.0000	0.0000	0.0000	0.0000	0.0000	0.0000	0.0000	0.0000	0.0000
Total	**0.0000**	**0.0000**	**0.0000**	**0.0000**	**0.0000**	**0.0000**	**0.0000**	**0.0000**	**0.0000**	**0.0000**	**0.0000**	**0.0000**	**0.0000**	**0.0000**	**0.0000**	**0.0000**

3.11 Year 5 Month 10 - 2024

Unmitigated Construction On-Site

	ROG	NOx	CO	SO2	Fugitive PM10	Exhaust PM10	PM10 Total	Fugitive PM2.5	Exhaust PM2.5	PM2.5 Total	Bio- CO2	NBio- CO2	Total CO2	CH4	N2O	CO2e
Category	tons/yr										MT/yr					
Off-Road	0.2552	2.3816	1.8324	4.7200e-003		0.0984	0.0984		0.0912	0.0912	0.0000	407.6619	407.6619	0.1244	0.0000	410.2749
Total	**0.2552**	**2.3816**	**1.8324**	**4.7200e-003**		**0.0984**	**0.0984**		**0.0912**	**0.0912**	**0.0000**	**407.6619**	**407.6619**	**0.1244**	**0.0000**	**410.2749**

Unmitigated Construction Off-Site

	ROG	NOx	CO	SO2	Fugitive PM10	Exhaust PM10	PM10 Total	Fugitive PM2.5	Exhaust PM2.5	PM2.5 Total	Bio- CO2	NBio- CO2	Total CO2	CH4	N2O	CO2e
Category	tons/yr										MT/yr					
Hauling	0.0000	0.0000	0.0000	0.0000	0.0000	0.0000	0.0000	0.0000	0.0000	0.0000	0.0000	0.0000	0.0000	0.0000	0.0000	0.0000
Vendor	0.0000	0.0000	0.0000	0.0000	0.0000	0.0000	0.0000	0.0000	0.0000	0.0000	0.0000	0.0000	0.0000	0.0000	0.0000	0.0000
Worker	0.0000	0.0000	0.0000	0.0000	0.0000	0.0000	0.0000	0.0000	0.0000	0.0000	0.0000	0.0000	0.0000	0.0000	0.0000	0.0000
Total	**0.0000**	**0.0000**	**0.0000**	**0.0000**	**0.0000**	**0.0000**	**0.0000**	**0.0000**	**0.0000**	**0.0000**	**0.0000**	**0.0000**	**0.0000**	**0.0000**	**0.0000**	**0.0000**

3.11 Year 5 Month 10 - 2024

Mitigated Construction On-Site

	ROG	NOx	CO	SO2	Fugitive PM10	Exhaust PM10	PM10 Total	Fugitive PM2.5	Exhaust PM2.5	PM2.5 Total	Bio- CO2	NBio- CO2	Total CO2	CH4	N2O	CO2e
Category	tons/yr										MT/yr					
Off-Road	0.0609	0.4683	2.4319	4.7200e-003		7.3800e-003	7.3800e-003		7.3800e-003	7.3800e-003	0.0000	407.6614	407.6614	0.1244	0.0000	410.2744
Total	**0.0609**	**0.4683**	**2.4319**	**4.7200e-003**		**7.3800e-003**	**7.3800e-003**		**7.3800e-003**	**7.3800e-003**	**0.0000**	**407.6614**	**407.6614**	**0.1244**	**0.0000**	**410.2744**

Mitigated Construction Off-Site

	ROG	NOx	CO	SO2	Fugitive PM10	Exhaust PM10	PM10 Total	Fugitive PM2.5	Exhaust PM2.5	PM2.5 Total	Bio- CO2	NBio- CO2	Total CO2	CH4	N2O	CO2e
Category	tons/yr										MT/yr					
Hauling	0.0000	0.0000	0.0000	0.0000	0.0000	0.0000	0.0000	0.0000	0.0000	0.0000	0.0000	0.0000	0.0000	0.0000	0.0000	0.0000
Vendor	0.0000	0.0000	0.0000	0.0000	0.0000	0.0000	0.0000	0.0000	0.0000	0.0000	0.0000	0.0000	0.0000	0.0000	0.0000	0.0000
Worker	0.0000	0.0000	0.0000	0.0000	0.0000	0.0000	0.0000	0.0000	0.0000	0.0000	0.0000	0.0000	0.0000	0.0000	0.0000	0.0000
Total	**0.0000**	**0.0000**	**0.0000**	**0.0000**	**0.0000**	**0.0000**	**0.0000**	**0.0000**	**0.0000**	**0.0000**	**0.0000**	**0.0000**	**0.0000**	**0.0000**	**0.0000**	**0.0000**

3.12 Year 5 Month 11 - 2024

Unmitigated Construction On-Site

	ROG	NOx	CO	SO2	Fugitive PM10	Exhaust PM10	PM10 Total	Fugitive PM2.5	Exhaust PM2.5	PM2.5 Total	Bio- CO2	NBio- CO2	Total CO2	CH4	N2O	CO2e
Category	tons/yr										MT/yr					
Off-Road	0.1846	1.7828	1.2572	3.6200e-003		0.0726	0.0726		0.0671	0.0671	0.0000	315.1093	315.1093	0.0992	0.0000	317.1922
Total	**0.1846**	**1.7828**	**1.2572**	**3.6200e-003**		**0.0726**	**0.0726**		**0.0671**	**0.0671**	**0.0000**	**315.1093**	**315.1093**	**0.0992**	**0.0000**	**317.1922**

Unmitigated Construction Off-Site

	ROG	NOx	CO	SO2	Fugitive PM10	Exhaust PM10	PM10 Total	Fugitive PM2.5	Exhaust PM2.5	PM2.5 Total	Bio- CO2	NBio- CO2	Total CO2	CH4	N2O	CO2e
Category	tons/yr										MT/yr					
Hauling	0.0000	0.0000	0.0000	0.0000	0.0000	0.0000	0.0000	0.0000	0.0000	0.0000	0.0000	0.0000	0.0000	0.0000	0.0000	0.0000
Vendor	0.0000	0.0000	0.0000	0.0000	0.0000	0.0000	0.0000	0.0000	0.0000	0.0000	0.0000	0.0000	0.0000	0.0000	0.0000	0.0000
Worker	0.0000	0.0000	0.0000	0.0000	0.0000	0.0000	0.0000	0.0000	0.0000	0.0000	0.0000	0.0000	0.0000	0.0000	0.0000	0.0000
Total	**0.0000**	**0.0000**	**0.0000**	**0.0000**	**0.0000**	**0.0000**	**0.0000**	**0.0000**	**0.0000**	**0.0000**	**0.0000**	**0.0000**	**0.0000**	**0.0000**	**0.0000**	**0.0000**

3.12 Year 5 Month 11 - 2024

Mitigated Construction On-Site

	ROG	NOx	CO	SO2	Fugitive PM10	Exhaust PM10	PM10 Total	Fugitive PM2.5	Exhaust PM2.5	PM2.5 Total	Bio- CO2	NBio- CO2	Total CO2	CH4	N2O	CO2e
Category	tons/yr										MT/yr					
Off-Road	0.0459	0.3096	1.7697	3.6200e-003		5.7200e-003	5.7200e-003		5.7200e-003	5.7200e-003	0.0000	315.1089	315.1089	0.0992	0.0000	317.1918
Total	**0.0459**	**0.3096**	**1.7697**	**3.6200e-003**		**5.7200e-003**	**5.7200e-003**		**5.7200e-003**	**5.7200e-003**	**0.0000**	**315.1089**	**315.1089**	**0.0992**	**0.0000**	**317.1918**

Mitigated Construction Off-Site

	ROG	NOx	CO	SO2	Fugitive PM10	Exhaust PM10	PM10 Total	Fugitive PM2.5	Exhaust PM2.5	PM2.5 Total	Bio- CO2	NBio- CO2	Total CO2	CH4	N2O	CO2e
Category	tons/yr										MT/yr					
Hauling	0.0000	0.0000	0.0000	0.0000	0.0000	0.0000	0.0000	0.0000	0.0000	0.0000	0.0000	0.0000	0.0000	0.0000	0.0000	0.0000
Vendor	0.0000	0.0000	0.0000	0.0000	0.0000	0.0000	0.0000	0.0000	0.0000	0.0000	0.0000	0.0000	0.0000	0.0000	0.0000	0.0000
Worker	0.0000	0.0000	0.0000	0.0000	0.0000	0.0000	0.0000	0.0000	0.0000	0.0000	0.0000	0.0000	0.0000	0.0000	0.0000	0.0000
Total	**0.0000**	**0.0000**	**0.0000**	**0.0000**	**0.0000**	**0.0000**	**0.0000**	**0.0000**	**0.0000**	**0.0000**	**0.0000**	**0.0000**	**0.0000**	**0.0000**	**0.0000**	**0.0000**

3.13 Year 5 Month 12 - 2024

Unmitigated Construction On-Site

	ROG	NOx	CO	SO2	Fugitive PM10	Exhaust PM10	PM10 Total	Fugitive PM2.5	Exhaust PM2.5	PM2.5 Total	Bio- CO2	NBio- CO2	Total CO2	CH4	N2O	CO2e
Category	tons/yr										MT/yr					
Off-Road	0.1846	1.7828	1.2572	3.6200e-003		0.0726	0.0726		0.0671	0.0671	0.0000	315.1093	315.1093	0.0992	0.0000	317.1922
Total	**0.1846**	**1.7828**	**1.2572**	**3.6200e-003**		**0.0726**	**0.0726**		**0.0671**	**0.0671**	**0.0000**	**315.1093**	**315.1093**	**0.0992**	**0.0000**	**317.1922**

Unmitigated Construction Off-Site

	ROG	NOx	CO	SO2	Fugitive PM10	Exhaust PM10	PM10 Total	Fugitive PM2.5	Exhaust PM2.5	PM2.5 Total	Bio- CO2	NBio- CO2	Total CO2	CH4	N2O	CO2e
Category	tons/yr										MT/yr					
Hauling	0.0000	0.0000	0.0000	0.0000	0.0000	0.0000	0.0000	0.0000	0.0000	0.0000	0.0000	0.0000	0.0000	0.0000	0.0000	0.0000
Vendor	0.0000	0.0000	0.0000	0.0000	0.0000	0.0000	0.0000	0.0000	0.0000	0.0000	0.0000	0.0000	0.0000	0.0000	0.0000	0.0000
Worker	0.0000	0.0000	0.0000	0.0000	0.0000	0.0000	0.0000	0.0000	0.0000	0.0000	0.0000	0.0000	0.0000	0.0000	0.0000	0.0000
Total	**0.0000**	**0.0000**	**0.0000**	**0.0000**	**0.0000**	**0.0000**	**0.0000**	**0.0000**	**0.0000**	**0.0000**	**0.0000**	**0.0000**	**0.0000**	**0.0000**	**0.0000**	**0.0000**

3.13 Year 5 Month 12 - 2024

Mitigated Construction On-Site

	ROG	NOx	CO	SO2	Fugitive PM10	Exhaust PM10	PM10 Total	Fugitive PM2.5	Exhaust PM2.5	PM2.5 Total	Bio- CO2	NBio- CO2	Total CO2	CH4	N2O	CO2e
Category	tons/yr										MT/yr					
Off-Road	0.0459	0.3096	1.7697	3.6200e-003		5.7200e-003	5.7200e-003		5.7200e-003	5.7200e-003	0.0000	315.1089	315.1089	0.0992	0.0000	317.1918
Total	**0.0459**	**0.3096**	**1.7697**	**3.6200e-003**		**5.7200e-003**	**5.7200e-003**		**5.7200e-003**	**5.7200e-003**	**0.0000**	**315.1089**	**315.1089**	**0.0992**	**0.0000**	**317.1918**

Mitigated Construction Off-Site

	ROG	NOx	CO	SO2	Fugitive PM10	Exhaust PM10	PM10 Total	Fugitive PM2.5	Exhaust PM2.5	PM2.5 Total	Bio- CO2	NBio- CO2	Total CO2	CH4	N2O	CO2e
Category	tons/yr										MT/yr					
Hauling	0.0000	0.0000	0.0000	0.0000	0.0000	0.0000	0.0000	0.0000	0.0000	0.0000	0.0000	0.0000	0.0000	0.0000	0.0000	0.0000
Vendor	0.0000	0.0000	0.0000	0.0000	0.0000	0.0000	0.0000	0.0000	0.0000	0.0000	0.0000	0.0000	0.0000	0.0000	0.0000	0.0000
Worker	0.0000	0.0000	0.0000	0.0000	0.0000	0.0000	0.0000	0.0000	0.0000	0.0000	0.0000	0.0000	0.0000	0.0000	0.0000	0.0000
Total	**0.0000**	**0.0000**	**0.0000**	**0.0000**	**0.0000**	**0.0000**	**0.0000**	**0.0000**	**0.0000**	**0.0000**	**0.0000**	**0.0000**	**0.0000**	**0.0000**	**0.0000**	**0.0000**

3.14 Year 6 Month 1 - 2025

Unmitigated Construction Off-Site

	ROG	NOx	CO	SO2	Fugitive PM10	Exhaust PM10	PM10 Total	Fugitive PM2.5	Exhaust PM2.5	PM2.5 Total	Bio- CO2	NBio- CO2	Total CO2	CH4	N2O	CO2e
Category	tons/yr										MT/yr					
Hauling					0.0000	0.0000	0.0000	0.0000	0.0000	0.0000	0.0000	0.0000	0.0000	0.0000	0.0000	0.0000
Vendor					0.0000	0.0000	0.0000	0.0000	0.0000	0.0000	0.0000	0.0000	0.0000	0.0000	0.0000	0.0000
Worker					0.0000	0.0000	0.0000	0.0000	0.0000	0.0000	0.0000	0.0000	0.0000	0.0000	0.0000	0.0000
Total					**0.0000**	**0.0000**	**0.0000**	**0.0000**	**0.0000**	**0.0000**	**0.0000**	**0.0000**	**0.0000**	**0.0000**	**0.0000**	**0.0000**

Mitigated Construction Off-Site

	ROG	NOx	CO	SO2	Fugitive PM10	Exhaust PM10	PM10 Total	Fugitive PM2.5	Exhaust PM2.5	PM2.5 Total	Bio- CO2	NBio- CO2	Total CO2	CH4	N2O	CO2e
Category	tons/yr										MT/yr					
Hauling					0.0000	0.0000	0.0000	0.0000	0.0000	0.0000	0.0000	0.0000	0.0000	0.0000	0.0000	0.0000
Vendor					0.0000	0.0000	0.0000	0.0000	0.0000	0.0000	0.0000	0.0000	0.0000	0.0000	0.0000	0.0000
Worker					0.0000	0.0000	0.0000	0.0000	0.0000	0.0000	0.0000	0.0000	0.0000	0.0000	0.0000	0.0000
Total					**0.0000**	**0.0000**	**0.0000**	**0.0000**	**0.0000**	**0.0000**	**0.0000**	**0.0000**	**0.0000**	**0.0000**	**0.0000**	**0.0000**

3.15 Year 6 Month 2 - 2025

Unmitigated Construction Off-Site

	ROG	NOx	CO	SO2	Fugitive PM10	Exhaust PM10	PM10 Total	Fugitive PM2.5	Exhaust PM2.5	PM2.5 Total	Bio- CO2	NBio- CO2	Total CO2	CH4	N2O	CO2e
Category	tons/yr										MT/yr					
Hauling					0.0000	0.0000	0.0000	0.0000	0.0000	0.0000	0.0000	0.0000	0.0000	0.0000	0.0000	0.0000
Vendor					0.0000	0.0000	0.0000	0.0000	0.0000	0.0000	0.0000	0.0000	0.0000	0.0000	0.0000	0.0000
Worker					0.0000	0.0000	0.0000	0.0000	0.0000	0.0000	0.0000	0.0000	0.0000	0.0000	0.0000	0.0000
Total					**0.0000**	**0.0000**	**0.0000**	**0.0000**	**0.0000**	**0.0000**	**0.0000**	**0.0000**	**0.0000**	**0.0000**	**0.0000**	**0.0000**

Mitigated Construction Off-Site

	ROG	NOx	CO	SO2	Fugitive PM10	Exhaust PM10	PM10 Total	Fugitive PM2.5	Exhaust PM2.5	PM2.5 Total	Bio- CO2	NBio- CO2	Total CO2	CH4	N2O	CO2e
Category	tons/yr										MT/yr					
Hauling					0.0000	0.0000	0.0000	0.0000	0.0000	0.0000	0.0000	0.0000	0.0000	0.0000	0.0000	0.0000
Vendor					0.0000	0.0000	0.0000	0.0000	0.0000	0.0000	0.0000	0.0000	0.0000	0.0000	0.0000	0.0000
Worker					0.0000	0.0000	0.0000	0.0000	0.0000	0.0000	0.0000	0.0000	0.0000	0.0000	0.0000	0.0000
Total					**0.0000**	**0.0000**	**0.0000**	**0.0000**	**0.0000**	**0.0000**	**0.0000**	**0.0000**	**0.0000**	**0.0000**	**0.0000**	**0.0000**

3.16 Year 6 Month 3 - 2025

Unmitigated Construction Off-Site

	ROG	NOx	CO	SO2	Fugitive PM10	Exhaust PM10	PM10 Total	Fugitive PM2.5	Exhaust PM2.5	PM2.5 Total	Bio- CO2	NBio- CO2	Total CO2	CH4	N2O	CO2e
Category	tons/yr										MT/yr					
Hauling					0.0000	0.0000	0.0000	0.0000	0.0000	0.0000	0.0000	0.0000	0.0000	0.0000	0.0000	0.0000
Vendor					0.0000	0.0000	0.0000	0.0000	0.0000	0.0000	0.0000	0.0000	0.0000	0.0000	0.0000	0.0000
Worker					0.0000	0.0000	0.0000	0.0000	0.0000	0.0000	0.0000	0.0000	0.0000	0.0000	0.0000	0.0000
Total					**0.0000**	**0.0000**	**0.0000**	**0.0000**	**0.0000**	**0.0000**	**0.0000**	**0.0000**	**0.0000**	**0.0000**	**0.0000**	**0.0000**

Mitigated Construction Off-Site

	ROG	NOx	CO	SO2	Fugitive PM10	Exhaust PM10	PM10 Total	Fugitive PM2.5	Exhaust PM2.5	PM2.5 Total	Bio- CO2	NBio- CO2	Total CO2	CH4	N2O	CO2e
Category	tons/yr										MT/yr					
Hauling					0.0000	0.0000	0.0000	0.0000	0.0000	0.0000	0.0000	0.0000	0.0000	0.0000	0.0000	0.0000
Vendor					0.0000	0.0000	0.0000	0.0000	0.0000	0.0000	0.0000	0.0000	0.0000	0.0000	0.0000	0.0000
Worker					0.0000	0.0000	0.0000	0.0000	0.0000	0.0000	0.0000	0.0000	0.0000	0.0000	0.0000	0.0000
Total					**0.0000**	**0.0000**	**0.0000**	**0.0000**	**0.0000**	**0.0000**	**0.0000**	**0.0000**	**0.0000**	**0.0000**	**0.0000**	**0.0000**

3.17 Year 6 Month 4 - 2025

Unmitigated Construction On-Site

	ROG	NOx	CO	SO2	Fugitive PM10	Exhaust PM10	PM10 Total	Fugitive PM2.5	Exhaust PM2.5	PM2.5 Total	Bio- CO2	NBio- CO2	Total CO2	CH4	N2O	CO2e
Category	tons/yr										MT/yr					
Off-Road	4.9700e-003	0.0504	0.0276	9.0000e-005		2.1400e-003	2.1400e-003		1.9700e-003	1.9700e-003	0.0000	8.0598	8.0598	2.6100e-003	0.0000	8.1145
Total	**4.9700e-003**	**0.0504**	**0.0276**	**9.0000e-005**		**2.1400e-003**	**2.1400e-003**		**1.9700e-003**	**1.9700e-003**	**0.0000**	**8.0598**	**8.0598**	**2.6100e-003**	**0.0000**	**8.1145**

Unmitigated Construction Off-Site

	ROG	NOx	CO	SO2	Fugitive PM10	Exhaust PM10	PM10 Total	Fugitive PM2.5	Exhaust PM2.5	PM2.5 Total	Bio- CO2	NBio- CO2	Total CO2	CH4	N2O	CO2e
Category	tons/yr										MT/yr					
Hauling	0.0000	0.0000	0.0000	0.0000	0.0000	0.0000	0.0000	0.0000	0.0000	0.0000	0.0000	0.0000	0.0000	0.0000	0.0000	0.0000
Vendor	0.0000	0.0000	0.0000	0.0000	0.0000	0.0000	0.0000	0.0000	0.0000	0.0000	0.0000	0.0000	0.0000	0.0000	0.0000	0.0000
Worker	0.0000	0.0000	0.0000	0.0000	0.0000	0.0000	0.0000	0.0000	0.0000	0.0000	0.0000	0.0000	0.0000	0.0000	0.0000	0.0000
Total	**0.0000**	**0.0000**	**0.0000**	**0.0000**	**0.0000**	**0.0000**	**0.0000**	**0.0000**	**0.0000**	**0.0000**	**0.0000**	**0.0000**	**0.0000**	**0.0000**	**0.0000**	**0.0000**

3.17 Year 6 Month 4 - 2025

Mitigated Construction On-Site

	ROG	NOx	CO	SO2	Fugitive PM10	Exhaust PM10	PM10 Total	Fugitive PM2.5	Exhaust PM2.5	PM2.5 Total	Bio- CO2	NBio- CO2	Total CO2	CH4	N2O	CO2e
Category	tons/yr										MT/yr					
Off-Road	1.1300e-003	4.8800e-003	0.0413	9.0000e-005		1.5000e-004	1.5000e-004		1.5000e-004	1.5000e-004	0.0000	8.0598	8.0598	2.6100e-003	0.0000	8.1145
Total	**1.1300e-003**	**4.8800e-003**	**0.0413**	**9.0000e-005**		**1.5000e-004**	**1.5000e-004**		**1.5000e-004**	**1.5000e-004**	**0.0000**	**8.0598**	**8.0598**	**2.6100e-003**	**0.0000**	**8.1145**

Mitigated Construction Off-Site

	ROG	NOx	CO	SO2	Fugitive PM10	Exhaust PM10	PM10 Total	Fugitive PM2.5	Exhaust PM2.5	PM2.5 Total	Bio- CO2	NBio- CO2	Total CO2	CH4	N2O	CO2e
Category	tons/yr										MT/yr					
Hauling	0.0000	0.0000	0.0000	0.0000	0.0000	0.0000	0.0000	0.0000	0.0000	0.0000	0.0000	0.0000	0.0000	0.0000	0.0000	0.0000
Vendor	0.0000	0.0000	0.0000	0.0000	0.0000	0.0000	0.0000	0.0000	0.0000	0.0000	0.0000	0.0000	0.0000	0.0000	0.0000	0.0000
Worker	0.0000	0.0000	0.0000	0.0000	0.0000	0.0000	0.0000	0.0000	0.0000	0.0000	0.0000	0.0000	0.0000	0.0000	0.0000	0.0000
Total	**0.0000**	**0.0000**	**0.0000**	**0.0000**	**0.0000**	**0.0000**	**0.0000**	**0.0000**	**0.0000**	**0.0000**	**0.0000**	**0.0000**	**0.0000**	**0.0000**	**0.0000**	**0.0000**

3.18 Year 6 Month 5 - 2025

Unmitigated Construction On-Site

	ROG	NOx	CO	SO2	Fugitive PM10	Exhaust PM10	PM10 Total	Fugitive PM2.5	Exhaust PM2.5	PM2.5 Total	Bio- CO2	NBio- CO2	Total CO2	CH4	N2O	CO2e
Category	tons/yr										MT/yr					
Off-Road	5.1600e-003	0.0523	0.0287	1.0000e-004		2.2200e-003	2.2200e-003		2.0500e-003	2.0500e-003	0.0000	8.3698	8.3698	2.7100e-003	0.0000	8.4266
Total	**5.1600e-003**	**0.0523**	**0.0287**	**1.0000e-004**		**2.2200e-003**	**2.2200e-003**		**2.0500e-003**	**2.0500e-003**	**0.0000**	**8.3698**	**8.3698**	**2.7100e-003**	**0.0000**	**8.4266**

Unmitigated Construction Off-Site

	ROG	NOx	CO	SO2	Fugitive PM10	Exhaust PM10	PM10 Total	Fugitive PM2.5	Exhaust PM2.5	PM2.5 Total	Bio- CO2	NBio- CO2	Total CO2	CH4	N2O	CO2e
Category	tons/yr										MT/yr					
Hauling	0.0000	0.0000	0.0000	0.0000	0.0000	0.0000	0.0000	0.0000	0.0000	0.0000	0.0000	0.0000	0.0000	0.0000	0.0000	0.0000
Vendor	0.0000	0.0000	0.0000	0.0000	0.0000	0.0000	0.0000	0.0000	0.0000	0.0000	0.0000	0.0000	0.0000	0.0000	0.0000	0.0000
Worker	0.0000	0.0000	0.0000	0.0000	0.0000	0.0000	0.0000	0.0000	0.0000	0.0000	0.0000	0.0000	0.0000	0.0000	0.0000	0.0000
Total	**0.0000**	**0.0000**	**0.0000**	**0.0000**	**0.0000**	**0.0000**	**0.0000**	**0.0000**	**0.0000**	**0.0000**	**0.0000**	**0.0000**	**0.0000**	**0.0000**	**0.0000**	**0.0000**

3.18 Year 6 Month 5 - 2025

Mitigated Construction On-Site

	ROG	NOx	CO	SO2	Fugitive PM10	Exhaust PM10	PM10 Total	Fugitive PM2.5	Exhaust PM2.5	PM2.5 Total	Bio- CO2	NBio- CO2	Total CO2	CH4	N2O	CO2e
Category	tons/yr										MT/yr					
Off-Road	1.1700e-003	5.0700e-003	0.0429	1.0000e-004		1.6000e-004	1.6000e-004		1.6000e-004	1.6000e-004	0.0000	8.3698	8.3698	2.7100e-003	0.0000	8.4266
Total	**1.1700e-003**	**5.0700e-003**	**0.0429**	**1.0000e-004**		**1.6000e-004**	**1.6000e-004**		**1.6000e-004**	**1.6000e-004**	**0.0000**	**8.3698**	**8.3698**	**2.7100e-003**	**0.0000**	**8.4266**

Mitigated Construction Off-Site

	ROG	NOx	CO	SO2	Fugitive PM10	Exhaust PM10	PM10 Total	Fugitive PM2.5	Exhaust PM2.5	PM2.5 Total	Bio- CO2	NBio- CO2	Total CO2	CH4	N2O	CO2e
Category	tons/yr										MT/yr					
Hauling	0.0000	0.0000	0.0000	0.0000	0.0000	0.0000	0.0000	0.0000	0.0000	0.0000	0.0000	0.0000	0.0000	0.0000	0.0000	0.0000
Vendor	0.0000	0.0000	0.0000	0.0000	0.0000	0.0000	0.0000	0.0000	0.0000	0.0000	0.0000	0.0000	0.0000	0.0000	0.0000	0.0000
Worker	0.0000	0.0000	0.0000	0.0000	0.0000	0.0000	0.0000	0.0000	0.0000	0.0000	0.0000	0.0000	0.0000	0.0000	0.0000	0.0000
Total	**0.0000**	**0.0000**	**0.0000**	**0.0000**	**0.0000**	**0.0000**	**0.0000**	**0.0000**	**0.0000**	**0.0000**	**0.0000**	**0.0000**	**0.0000**	**0.0000**	**0.0000**	**0.0000**

3.19 Year 6 Month 6 - 2025

Unmitigated Construction Off-Site

	ROG	NOx	CO	SO2	Fugitive PM10	Exhaust PM10	PM10 Total	Fugitive PM2.5	Exhaust PM2.5	PM2.5 Total	Bio- CO2	NBio- CO2	Total CO2	CH4	N2O	CO2e
Category	tons/yr										MT/yr					
Hauling					0.0000	0.0000	0.0000	0.0000	0.0000	0.0000	0.0000	0.0000	0.0000	0.0000	0.0000	0.0000
Vendor					0.0000	0.0000	0.0000	0.0000	0.0000	0.0000	0.0000	0.0000	0.0000	0.0000	0.0000	0.0000
Worker					0.0000	0.0000	0.0000	0.0000	0.0000	0.0000	0.0000	0.0000	0.0000	0.0000	0.0000	0.0000
Total					**0.0000**	**0.0000**	**0.0000**	**0.0000**	**0.0000**	**0.0000**	**0.0000**	**0.0000**	**0.0000**	**0.0000**	**0.0000**	**0.0000**

Mitigated Construction Off-Site

	ROG	NOx	CO	SO2	Fugitive PM10	Exhaust PM10	PM10 Total	Fugitive PM2.5	Exhaust PM2.5	PM2.5 Total	Bio- CO2	NBio- CO2	Total CO2	CH4	N2O	CO2e
Category	tons/yr										MT/yr					
Hauling					0.0000	0.0000	0.0000	0.0000	0.0000	0.0000	0.0000	0.0000	0.0000	0.0000	0.0000	0.0000
Vendor					0.0000	0.0000	0.0000	0.0000	0.0000	0.0000	0.0000	0.0000	0.0000	0.0000	0.0000	0.0000
Worker					0.0000	0.0000	0.0000	0.0000	0.0000	0.0000	0.0000	0.0000	0.0000	0.0000	0.0000	0.0000
Total					**0.0000**	**0.0000**	**0.0000**	**0.0000**	**0.0000**	**0.0000**	**0.0000**	**0.0000**	**0.0000**	**0.0000**	**0.0000**	**0.0000**

3.20 Year 6 Month 7 - 2025

Unmitigated Construction Off-Site

	ROG	NOx	CO	SO2	Fugitive PM10	Exhaust PM10	PM10 Total	Fugitive PM2.5	Exhaust PM2.5	PM2.5 Total	Bio- CO2	NBio- CO2	Total CO2	CH4	N2O	CO2e
Category	tons/yr										MT/yr					
Hauling					0.0000	0.0000	0.0000	0.0000	0.0000	0.0000	0.0000	0.0000	0.0000	0.0000	0.0000	0.0000
Vendor					0.0000	0.0000	0.0000	0.0000	0.0000	0.0000	0.0000	0.0000	0.0000	0.0000	0.0000	0.0000
Worker					0.0000	0.0000	0.0000	0.0000	0.0000	0.0000	0.0000	0.0000	0.0000	0.0000	0.0000	0.0000
Total					**0.0000**	**0.0000**	**0.0000**	**0.0000**	**0.0000**	**0.0000**	**0.0000**	**0.0000**	**0.0000**	**0.0000**	**0.0000**	**0.0000**

Mitigated Construction Off-Site

	ROG	NOx	CO	SO2	Fugitive PM10	Exhaust PM10	PM10 Total	Fugitive PM2.5	Exhaust PM2.5	PM2.5 Total	Bio- CO2	NBio- CO2	Total CO2	CH4	N2O	CO2e
Category	tons/yr										MT/yr					
Hauling					0.0000	0.0000	0.0000	0.0000	0.0000	0.0000	0.0000	0.0000	0.0000	0.0000	0.0000	0.0000
Vendor					0.0000	0.0000	0.0000	0.0000	0.0000	0.0000	0.0000	0.0000	0.0000	0.0000	0.0000	0.0000
Worker					0.0000	0.0000	0.0000	0.0000	0.0000	0.0000	0.0000	0.0000	0.0000	0.0000	0.0000	0.0000
Total					**0.0000**	**0.0000**	**0.0000**	**0.0000**	**0.0000**	**0.0000**	**0.0000**	**0.0000**	**0.0000**	**0.0000**	**0.0000**	**0.0000**

3.21 Year 6 Month 8 - 2025

Unmitigated Construction Off-Site

	ROG	NOx	CO	SO2	Fugitive PM10	Exhaust PM10	PM10 Total	Fugitive PM2.5	Exhaust PM2.5	PM2.5 Total	Bio- CO2	NBio- CO2	Total CO2	CH4	N2O	CO2e
Category	tons/yr										MT/yr					
Hauling					0.0000	0.0000	0.0000	0.0000	0.0000	0.0000	0.0000	0.0000	0.0000	0.0000	0.0000	0.0000
Vendor					0.0000	0.0000	0.0000	0.0000	0.0000	0.0000	0.0000	0.0000	0.0000	0.0000	0.0000	0.0000
Worker					0.0000	0.0000	0.0000	0.0000	0.0000	0.0000	0.0000	0.0000	0.0000	0.0000	0.0000	0.0000
Total					**0.0000**	**0.0000**	**0.0000**	**0.0000**	**0.0000**	**0.0000**	**0.0000**	**0.0000**	**0.0000**	**0.0000**	**0.0000**	**0.0000**

Mitigated Construction Off-Site

	ROG	NOx	CO	SO2	Fugitive PM10	Exhaust PM10	PM10 Total	Fugitive PM2.5	Exhaust PM2.5	PM2.5 Total	Bio- CO2	NBio- CO2	Total CO2	CH4	N2O	CO2e
Category	tons/yr										MT/yr					
Hauling					0.0000	0.0000	0.0000	0.0000	0.0000	0.0000	0.0000	0.0000	0.0000	0.0000	0.0000	0.0000
Vendor					0.0000	0.0000	0.0000	0.0000	0.0000	0.0000	0.0000	0.0000	0.0000	0.0000	0.0000	0.0000
Worker					0.0000	0.0000	0.0000	0.0000	0.0000	0.0000	0.0000	0.0000	0.0000	0.0000	0.0000	0.0000
Total					**0.0000**	**0.0000**	**0.0000**	**0.0000**	**0.0000**	**0.0000**	**0.0000**	**0.0000**	**0.0000**	**0.0000**	**0.0000**	**0.0000**

3.22 Year 6 Month 9 - 2025

Unmitigated Construction Off-Site

	ROG	NOx	CO	SO2	Fugitive PM10	Exhaust PM10	PM10 Total	Fugitive PM2.5	Exhaust PM2.5	PM2.5 Total	Bio- CO2	NBio- CO2	Total CO2	CH4	N2O	CO2e
Category	tons/yr										MT/yr					
Hauling					0.0000	0.0000	0.0000	0.0000	0.0000	0.0000	0.0000	0.0000	0.0000	0.0000	0.0000	0.0000
Vendor					0.0000	0.0000	0.0000	0.0000	0.0000	0.0000	0.0000	0.0000	0.0000	0.0000	0.0000	0.0000
Worker					0.0000	0.0000	0.0000	0.0000	0.0000	0.0000	0.0000	0.0000	0.0000	0.0000	0.0000	0.0000
Total					**0.0000**	**0.0000**	**0.0000**	**0.0000**	**0.0000**	**0.0000**	**0.0000**	**0.0000**	**0.0000**	**0.0000**	**0.0000**	**0.0000**

Mitigated Construction Off-Site

	ROG	NOx	CO	SO2	Fugitive PM10	Exhaust PM10	PM10 Total	Fugitive PM2.5	Exhaust PM2.5	PM2.5 Total	Bio- CO2	NBio- CO2	Total CO2	CH4	N2O	CO2e
Category	tons/yr										MT/yr					
Hauling					0.0000	0.0000	0.0000	0.0000	0.0000	0.0000	0.0000	0.0000	0.0000	0.0000	0.0000	0.0000
Vendor					0.0000	0.0000	0.0000	0.0000	0.0000	0.0000	0.0000	0.0000	0.0000	0.0000	0.0000	0.0000
Worker					0.0000	0.0000	0.0000	0.0000	0.0000	0.0000	0.0000	0.0000	0.0000	0.0000	0.0000	0.0000
Total					**0.0000**	**0.0000**	**0.0000**	**0.0000**	**0.0000**	**0.0000**	**0.0000**	**0.0000**	**0.0000**	**0.0000**	**0.0000**	**0.0000**

3.23 Year 6 Month 10 - 2025

Unmitigated Construction Off-Site

	ROG	NOx	CO	SO2	Fugitive PM10	Exhaust PM10	PM10 Total	Fugitive PM2.5	Exhaust PM2.5	PM2.5 Total	Bio- CO2	NBio- CO2	Total CO2	CH4	N2O	CO2e
Category	tons/yr										MT/yr					
Hauling					0.0000	0.0000	0.0000	0.0000	0.0000	0.0000	0.0000	0.0000	0.0000	0.0000	0.0000	0.0000
Vendor					0.0000	0.0000	0.0000	0.0000	0.0000	0.0000	0.0000	0.0000	0.0000	0.0000	0.0000	0.0000
Worker					0.0000	0.0000	0.0000	0.0000	0.0000	0.0000	0.0000	0.0000	0.0000	0.0000	0.0000	0.0000
Total					**0.0000**	**0.0000**	**0.0000**	**0.0000**	**0.0000**	**0.0000**	**0.0000**	**0.0000**	**0.0000**	**0.0000**	**0.0000**	**0.0000**

Mitigated Construction Off-Site

	ROG	NOx	CO	SO2	Fugitive PM10	Exhaust PM10	PM10 Total	Fugitive PM2.5	Exhaust PM2.5	PM2.5 Total	Bio- CO2	NBio- CO2	Total CO2	CH4	N2O	CO2e
Category	tons/yr										MT/yr					
Hauling					0.0000	0.0000	0.0000	0.0000	0.0000	0.0000	0.0000	0.0000	0.0000	0.0000	0.0000	0.0000
Vendor					0.0000	0.0000	0.0000	0.0000	0.0000	0.0000	0.0000	0.0000	0.0000	0.0000	0.0000	0.0000
Worker					0.0000	0.0000	0.0000	0.0000	0.0000	0.0000	0.0000	0.0000	0.0000	0.0000	0.0000	0.0000
Total					**0.0000**	**0.0000**	**0.0000**	**0.0000**	**0.0000**	**0.0000**	**0.0000**	**0.0000**	**0.0000**	**0.0000**	**0.0000**	**0.0000**

3.24 Year 6 Month 11 - 2025

Unmitigated Construction Off-Site

	ROG	NOx	CO	SO2	Fugitive PM10	Exhaust PM10	PM10 Total	Fugitive PM2.5	Exhaust PM2.5	PM2.5 Total	Bio- CO2	NBio- CO2	Total CO2	CH4	N2O	CO2e
Category	tons/yr										MT/yr					
Hauling					0.0000	0.0000	0.0000	0.0000	0.0000	0.0000	0.0000	0.0000	0.0000	0.0000	0.0000	0.0000
Vendor					0.0000	0.0000	0.0000	0.0000	0.0000	0.0000	0.0000	0.0000	0.0000	0.0000	0.0000	0.0000
Worker					0.0000	0.0000	0.0000	0.0000	0.0000	0.0000	0.0000	0.0000	0.0000	0.0000	0.0000	0.0000
Total					**0.0000**	**0.0000**	**0.0000**	**0.0000**	**0.0000**	**0.0000**	**0.0000**	**0.0000**	**0.0000**	**0.0000**	**0.0000**	**0.0000**

Mitigated Construction Off-Site

	ROG	NOx	CO	SO2	Fugitive PM10	Exhaust PM10	PM10 Total	Fugitive PM2.5	Exhaust PM2.5	PM2.5 Total	Bio- CO2	NBio- CO2	Total CO2	CH4	N2O	CO2e
Category	tons/yr										MT/yr					
Hauling					0.0000	0.0000	0.0000	0.0000	0.0000	0.0000	0.0000	0.0000	0.0000	0.0000	0.0000	0.0000
Vendor					0.0000	0.0000	0.0000	0.0000	0.0000	0.0000	0.0000	0.0000	0.0000	0.0000	0.0000	0.0000
Worker					0.0000	0.0000	0.0000	0.0000	0.0000	0.0000	0.0000	0.0000	0.0000	0.0000	0.0000	0.0000
Total					**0.0000**	**0.0000**	**0.0000**	**0.0000**	**0.0000**	**0.0000**	**0.0000**	**0.0000**	**0.0000**	**0.0000**	**0.0000**	**0.0000**

3.25 Year 6 Month 12 - 2025

Unmitigated Construction Off-Site

	ROG	NOx	CO	SO2	Fugitive PM10	Exhaust PM10	PM10 Total	Fugitive PM2.5	Exhaust PM2.5	PM2.5 Total	Bio- CO2	NBio- CO2	Total CO2	CH4	N2O	CO2e
Category	tons/yr										MT/yr					
Hauling					0.0000	0.0000	0.0000	0.0000	0.0000	0.0000	0.0000	0.0000	0.0000	0.0000	0.0000	0.0000
Vendor					0.0000	0.0000	0.0000	0.0000	0.0000	0.0000	0.0000	0.0000	0.0000	0.0000	0.0000	0.0000
Worker					0.0000	0.0000	0.0000	0.0000	0.0000	0.0000	0.0000	0.0000	0.0000	0.0000	0.0000	0.0000
Total					**0.0000**	**0.0000**	**0.0000**	**0.0000**	**0.0000**	**0.0000**	**0.0000**	**0.0000**	**0.0000**	**0.0000**	**0.0000**	**0.0000**

Mitigated Construction Off-Site

	ROG	NOx	CO	SO2	Fugitive PM10	Exhaust PM10	PM10 Total	Fugitive PM2.5	Exhaust PM2.5	PM2.5 Total	Bio- CO2	NBio- CO2	Total CO2	CH4	N2O	CO2e
Category	tons/yr										MT/yr					
Hauling					0.0000	0.0000	0.0000	0.0000	0.0000	0.0000	0.0000	0.0000	0.0000	0.0000	0.0000	0.0000
Vendor					0.0000	0.0000	0.0000	0.0000	0.0000	0.0000	0.0000	0.0000	0.0000	0.0000	0.0000	0.0000
Worker					0.0000	0.0000	0.0000	0.0000	0.0000	0.0000	0.0000	0.0000	0.0000	0.0000	0.0000	0.0000
Total					**0.0000**	**0.0000**	**0.0000**	**0.0000**	**0.0000**	**0.0000**	**0.0000**	**0.0000**	**0.0000**	**0.0000**	**0.0000**	**0.0000**

3.26 Year 7 Month 1 - 2026

Unmitigated Construction On-Site

	ROG	NOx	CO	SO2	Fugitive PM10	Exhaust PM10	PM10 Total	Fugitive PM2.5	Exhaust PM2.5	PM2.5 Total	Bio- CO2	NBio- CO2	Total CO2	CH4	N2O	CO2e
Category	tons/yr										MT/yr					
Off-Road	0.0161	0.1511	0.1721	3.4000e-004		6.7400e-003	6.7400e-003		6.2000e-003	6.2000e-003	0.0000	30.1402	30.1402	9.7500e-003	0.0000	30.3449
Total	**0.0161**	**0.1511**	**0.1721**	**3.4000e-004**		**6.7400e-003**	**6.7400e-003**		**6.2000e-003**	**6.2000e-003**	**0.0000**	**30.1402**	**30.1402**	**9.7500e-003**	**0.0000**	**30.3449**

Unmitigated Construction Off-Site

	ROG	NOx	CO	SO2	Fugitive PM10	Exhaust PM10	PM10 Total	Fugitive PM2.5	Exhaust PM2.5	PM2.5 Total	Bio- CO2	NBio- CO2	Total CO2	CH4	N2O	CO2e
Category	tons/yr										MT/yr					
Hauling	0.0000	0.0000	0.0000	0.0000	0.0000	0.0000	0.0000	0.0000	0.0000	0.0000	0.0000	0.0000	0.0000	0.0000	0.0000	0.0000
Vendor	0.0000	0.0000	0.0000	0.0000	0.0000	0.0000	0.0000	0.0000	0.0000	0.0000	0.0000	0.0000	0.0000	0.0000	0.0000	0.0000
Worker	0.0000	0.0000	0.0000	0.0000	0.0000	0.0000	0.0000	0.0000	0.0000	0.0000	0.0000	0.0000	0.0000	0.0000	0.0000	0.0000
Total	**0.0000**	**0.0000**	**0.0000**	**0.0000**	**0.0000**	**0.0000**	**0.0000**	**0.0000**	**0.0000**	**0.0000**	**0.0000**	**0.0000**	**0.0000**	**0.0000**	**0.0000**	**0.0000**

3.26 Year 7 Month 1 - 2026

Mitigated Construction On-Site

	ROG	NOx	CO	SO2	Fugitive PM10	Exhaust PM10	PM10 Total	Fugitive PM2.5	Exhaust PM2.5	PM2.5 Total	Bio- CO2	NBio- CO2	Total CO2	CH4	N2O	CO2e
Category	tons/yr										MT/yr					
Off-Road	4.6700e-003	0.0366	0.2162	3.4000e-004		5.6000e-004	5.6000e-004		5.6000e-004	5.6000e-004	0.0000	30.1402	30.1402	9.7500e-003	0.0000	30.3449
Total	**4.6700e-003**	**0.0366**	**0.2162**	**3.4000e-004**		**5.6000e-004**	**5.6000e-004**		**5.6000e-004**	**5.6000e-004**	**0.0000**	**30.1402**	**30.1402**	**9.7500e-003**	**0.0000**	**30.3449**

Mitigated Construction Off-Site

	ROG	NOx	CO	SO2	Fugitive PM10	Exhaust PM10	PM10 Total	Fugitive PM2.5	Exhaust PM2.5	PM2.5 Total	Bio- CO2	NBio- CO2	Total CO2	CH4	N2O	CO2e
Category	tons/yr										MT/yr					
Hauling	0.0000	0.0000	0.0000	0.0000	0.0000	0.0000	0.0000	0.0000	0.0000	0.0000	0.0000	0.0000	0.0000	0.0000	0.0000	0.0000
Vendor	0.0000	0.0000	0.0000	0.0000	0.0000	0.0000	0.0000	0.0000	0.0000	0.0000	0.0000	0.0000	0.0000	0.0000	0.0000	0.0000
Worker	0.0000	0.0000	0.0000	0.0000	0.0000	0.0000	0.0000	0.0000	0.0000	0.0000	0.0000	0.0000	0.0000	0.0000	0.0000	0.0000
Total	**0.0000**	**0.0000**	**0.0000**	**0.0000**	**0.0000**	**0.0000**	**0.0000**	**0.0000**	**0.0000**	**0.0000**	**0.0000**	**0.0000**	**0.0000**	**0.0000**	**0.0000**	**0.0000**

3.27 Year 7 Month 2 - 2026

Unmitigated Construction On-Site

	ROG	NOx	CO	SO2	Fugitive PM10	Exhaust PM10	PM10 Total	Fugitive PM2.5	Exhaust PM2.5	PM2.5 Total	Bio- CO2	NBio- CO2	Total CO2	CH4	N2O	CO2e
Category	tons/yr										MT/yr					
Off-Road	0.0329	0.2954	0.2944	6.1000e-004		0.0127	0.0127		0.0118	0.0118	0.0000	52.9833	52.9833	0.0160	0.0000	53.3184
Total	**0.0329**	**0.2954**	**0.2944**	**6.1000e-004**		**0.0127**	**0.0127**		**0.0118**	**0.0118**	**0.0000**	**52.9833**	**52.9833**	**0.0160**	**0.0000**	**53.3184**

Unmitigated Construction Off-Site

	ROG	NOx	CO	SO2	Fugitive PM10	Exhaust PM10	PM10 Total	Fugitive PM2.5	Exhaust PM2.5	PM2.5 Total	Bio- CO2	NBio- CO2	Total CO2	CH4	N2O	CO2e
Category	tons/yr										MT/yr					
Hauling	0.0000	0.0000	0.0000	0.0000	0.0000	0.0000	0.0000	0.0000	0.0000	0.0000	0.0000	0.0000	0.0000	0.0000	0.0000	0.0000
Vendor	0.0000	0.0000	0.0000	0.0000	0.0000	0.0000	0.0000	0.0000	0.0000	0.0000	0.0000	0.0000	0.0000	0.0000	0.0000	0.0000
Worker	0.0000	0.0000	0.0000	0.0000	0.0000	0.0000	0.0000	0.0000	0.0000	0.0000	0.0000	0.0000	0.0000	0.0000	0.0000	0.0000
Total	**0.0000**	**0.0000**	**0.0000**	**0.0000**	**0.0000**	**0.0000**	**0.0000**	**0.0000**	**0.0000**	**0.0000**	**0.0000**	**0.0000**	**0.0000**	**0.0000**	**0.0000**	**0.0000**

3.27 Year 7 Month 2 - 2026

Mitigated Construction On-Site

	ROG	NOx	CO	SO2	Fugitive PM10	Exhaust PM10	PM10 Total	Fugitive PM2.5	Exhaust PM2.5	PM2.5 Total	Bio- CO2	NBio- CO2	Total CO2	CH4	N2O	CO2e
Category	tons/yr										MT/yr					
Off-Road	8.3000e-003	0.0728	0.3629	6.1000e-004		9.7000e-004	9.7000e-004		9.7000e-004	9.7000e-004	0.0000	52.9832	52.9832	0.0160	0.0000	53.3184
Total	**8.3000e-003**	**0.0728**	**0.3629**	**6.1000e-004**		**9.7000e-004**	**9.7000e-004**		**9.7000e-004**	**9.7000e-004**	**0.0000**	**52.9832**	**52.9832**	**0.0160**	**0.0000**	**53.3184**

Mitigated Construction Off-Site

	ROG	NOx	CO	SO2	Fugitive PM10	Exhaust PM10	PM10 Total	Fugitive PM2.5	Exhaust PM2.5	PM2.5 Total	Bio- CO2	NBio- CO2	Total CO2	CH4	N2O	CO2e
Category	tons/yr										MT/yr					
Hauling	0.0000	0.0000	0.0000	0.0000	0.0000	0.0000	0.0000	0.0000	0.0000	0.0000	0.0000	0.0000	0.0000	0.0000	0.0000	0.0000
Vendor	0.0000	0.0000	0.0000	0.0000	0.0000	0.0000	0.0000	0.0000	0.0000	0.0000	0.0000	0.0000	0.0000	0.0000	0.0000	0.0000
Worker	0.0000	0.0000	0.0000	0.0000	0.0000	0.0000	0.0000	0.0000	0.0000	0.0000	0.0000	0.0000	0.0000	0.0000	0.0000	0.0000
Total	**0.0000**	**0.0000**	**0.0000**	**0.0000**	**0.0000**	**0.0000**	**0.0000**	**0.0000**	**0.0000**	**0.0000**	**0.0000**	**0.0000**	**0.0000**	**0.0000**	**0.0000**	**0.0000**

3.28 Year 7 Month 3 - 2026

Unmitigated Construction On-Site

	ROG	NOx	CO	SO2	Fugitive PM10	Exhaust PM10	PM10 Total	Fugitive PM2.5	Exhaust PM2.5	PM2.5 Total	Bio- CO2	NBio- CO2	Total CO2	CH4	N2O	CO2e
Category	tons/yr										MT/yr					
Off-Road	0.0201	0.1745	0.1533	3.4000e-004		7.2500e-003	7.2500e-003		6.7700e-003	6.7700e-003	0.0000	28.3747	28.3747	7.9000e-003	0.0000	28.5406
Total	**0.0201**	**0.1745**	**0.1533**	**3.4000e-004**		**7.2500e-003**	**7.2500e-003**		**6.7700e-003**	**6.7700e-003**	**0.0000**	**28.3747**	**28.3747**	**7.9000e-003**	**0.0000**	**28.5406**

Unmitigated Construction Off-Site

	ROG	NOx	CO	SO2	Fugitive PM10	Exhaust PM10	PM10 Total	Fugitive PM2.5	Exhaust PM2.5	PM2.5 Total	Bio- CO2	NBio- CO2	Total CO2	CH4	N2O	CO2e
Category	tons/yr										MT/yr					
Hauling	0.0000	0.0000	0.0000	0.0000	0.0000	0.0000	0.0000	0.0000	0.0000	0.0000	0.0000	0.0000	0.0000	0.0000	0.0000	0.0000
Vendor	0.0000	0.0000	0.0000	0.0000	0.0000	0.0000	0.0000	0.0000	0.0000	0.0000	0.0000	0.0000	0.0000	0.0000	0.0000	0.0000
Worker	0.0000	0.0000	0.0000	0.0000	0.0000	0.0000	0.0000	0.0000	0.0000	0.0000	0.0000	0.0000	0.0000	0.0000	0.0000	0.0000
Total	**0.0000**	**0.0000**	**0.0000**	**0.0000**	**0.0000**	**0.0000**	**0.0000**	**0.0000**	**0.0000**	**0.0000**	**0.0000**	**0.0000**	**0.0000**	**0.0000**	**0.0000**	**0.0000**

3.28 Year 7 Month 3 - 2026

Mitigated Construction On-Site

	ROG	NOx	CO	SO2	Fugitive PM10	Exhaust PM10	PM10 Total	Fugitive PM2.5	Exhaust PM2.5	PM2.5 Total	Bio- CO2	NBio- CO2	Total CO2	CH4	N2O	CO2e
Category	tons/yr										MT/yr					
Off-Road	4.4900e-003	0.0436	0.1850	3.4000e-004		5.1000e-004	5.1000e-004		5.1000e-004	5.1000e-004	0.0000	28.3746	28.3746	7.9000e-003	0.0000	28.5406
Total	**4.4900e-003**	**0.0436**	**0.1850**	**3.4000e-004**		**5.1000e-004**	**5.1000e-004**		**5.1000e-004**	**5.1000e-004**	**0.0000**	**28.3746**	**28.3746**	**7.9000e-003**	**0.0000**	**28.5406**

Mitigated Construction Off-Site

	ROG	NOx	CO	SO2	Fugitive PM10	Exhaust PM10	PM10 Total	Fugitive PM2.5	Exhaust PM2.5	PM2.5 Total	Bio- CO2	NBio- CO2	Total CO2	CH4	N2O	CO2e
Category	tons/yr										MT/yr					
Hauling	0.0000	0.0000	0.0000	0.0000	0.0000	0.0000	0.0000	0.0000	0.0000	0.0000	0.0000	0.0000	0.0000	0.0000	0.0000	0.0000
Vendor	0.0000	0.0000	0.0000	0.0000	0.0000	0.0000	0.0000	0.0000	0.0000	0.0000	0.0000	0.0000	0.0000	0.0000	0.0000	0.0000
Worker	0.0000	0.0000	0.0000	0.0000	0.0000	0.0000	0.0000	0.0000	0.0000	0.0000	0.0000	0.0000	0.0000	0.0000	0.0000	0.0000
Total	**0.0000**	**0.0000**	**0.0000**	**0.0000**	**0.0000**	**0.0000**	**0.0000**	**0.0000**	**0.0000**	**0.0000**	**0.0000**	**0.0000**	**0.0000**	**0.0000**	**0.0000**	**0.0000**

3.29 Year 7 Month 4 - 2026

Unmitigated Construction On-Site

	ROG	NOx	CO	SO2	Fugitive PM10	Exhaust PM10	PM10 Total	Fugitive PM2.5	Exhaust PM2.5	PM2.5 Total	Bio- CO2	NBio- CO2	Total CO2	CH4	N2O	CO2e
Category	tons/yr										MT/yr					
Off-Road	0.0201	0.1745	0.1533	3.4000e-004		7.2500e-003	7.2500e-003		6.7700e-003	6.7700e-003	0.0000	28.3747	28.3747	7.9000e-003	0.0000	28.5406
Total	**0.0201**	**0.1745**	**0.1533**	**3.4000e-004**		**7.2500e-003**	**7.2500e-003**		**6.7700e-003**	**6.7700e-003**	**0.0000**	**28.3747**	**28.3747**	**7.9000e-003**	**0.0000**	**28.5406**

Unmitigated Construction Off-Site

	ROG	NOx	CO	SO2	Fugitive PM10	Exhaust PM10	PM10 Total	Fugitive PM2.5	Exhaust PM2.5	PM2.5 Total	Bio- CO2	NBio- CO2	Total CO2	CH4	N2O	CO2e
Category	tons/yr										MT/yr					
Hauling	0.0000	0.0000	0.0000	0.0000	0.0000	0.0000	0.0000	0.0000	0.0000	0.0000	0.0000	0.0000	0.0000	0.0000	0.0000	0.0000
Vendor	0.0000	0.0000	0.0000	0.0000	0.0000	0.0000	0.0000	0.0000	0.0000	0.0000	0.0000	0.0000	0.0000	0.0000	0.0000	0.0000
Worker	0.0000	0.0000	0.0000	0.0000	0.0000	0.0000	0.0000	0.0000	0.0000	0.0000	0.0000	0.0000	0.0000	0.0000	0.0000	0.0000
Total	**0.0000**	**0.0000**	**0.0000**	**0.0000**	**0.0000**	**0.0000**	**0.0000**	**0.0000**	**0.0000**	**0.0000**	**0.0000**	**0.0000**	**0.0000**	**0.0000**	**0.0000**	**0.0000**

3.29 Year 7 Month 4 - 2026

Mitigated Construction On-Site

	ROG	NOx	CO	SO2	Fugitive PM10	Exhaust PM10	PM10 Total	Fugitive PM2.5	Exhaust PM2.5	PM2.5 Total	Bio- CO2	NBio- CO2	Total CO2	CH4	N2O	CO2e
Category	tons/yr										MT/yr					
Off-Road	4.4900e-003	0.0436	0.1850	3.4000e-004		5.1000e-004	5.1000e-004		5.1000e-004	5.1000e-004	0.0000	28.3746	28.3746	7.9000e-003	0.0000	28.5406
Total	**4.4900e-003**	**0.0436**	**0.1850**	**3.4000e-004**		**5.1000e-004**	**5.1000e-004**		**5.1000e-004**	**5.1000e-004**	**0.0000**	**28.3746**	**28.3746**	**7.9000e-003**	**0.0000**	**28.5406**

Mitigated Construction Off-Site

	ROG	NOx	CO	SO2	Fugitive PM10	Exhaust PM10	PM10 Total	Fugitive PM2.5	Exhaust PM2.5	PM2.5 Total	Bio- CO2	NBio- CO2	Total CO2	CH4	N2O	CO2e
Category	tons/yr										MT/yr					
Hauling	0.0000	0.0000	0.0000	0.0000	0.0000	0.0000	0.0000	0.0000	0.0000	0.0000	0.0000	0.0000	0.0000	0.0000	0.0000	0.0000
Vendor	0.0000	0.0000	0.0000	0.0000	0.0000	0.0000	0.0000	0.0000	0.0000	0.0000	0.0000	0.0000	0.0000	0.0000	0.0000	0.0000
Worker	0.0000	0.0000	0.0000	0.0000	0.0000	0.0000	0.0000	0.0000	0.0000	0.0000	0.0000	0.0000	0.0000	0.0000	0.0000	0.0000
Total	**0.0000**	**0.0000**	**0.0000**	**0.0000**	**0.0000**	**0.0000**	**0.0000**	**0.0000**	**0.0000**	**0.0000**	**0.0000**	**0.0000**	**0.0000**	**0.0000**	**0.0000**	**0.0000**

3.30 Year 7 Month 5 - 2026

Unmitigated Construction On-Site

	ROG	NOx	CO	SO2	Fugitive PM10	Exhaust PM10	PM10 Total	Fugitive PM2.5	Exhaust PM2.5	PM2.5 Total	Bio- CO2	NBio- CO2	Total CO2	CH4	N2O	CO2e
Category	tons/yr										MT/yr					
Off-Road	0.0201	0.1745	0.1533	3.4000e-004		7.2500e-003	7.2500e-003		6.7700e-003	6.7700e-003	0.0000	28.3747	28.3747	7.9000e-003	0.0000	28.5406
Total	**0.0201**	**0.1745**	**0.1533**	**3.4000e-004**		**7.2500e-003**	**7.2500e-003**		**6.7700e-003**	**6.7700e-003**	**0.0000**	**28.3747**	**28.3747**	**7.9000e-003**	**0.0000**	**28.5406**

Unmitigated Construction Off-Site

	ROG	NOx	CO	SO2	Fugitive PM10	Exhaust PM10	PM10 Total	Fugitive PM2.5	Exhaust PM2.5	PM2.5 Total	Bio- CO2	NBio- CO2	Total CO2	CH4	N2O	CO2e
Category	tons/yr										MT/yr					
Hauling	0.0000	0.0000	0.0000	0.0000	0.0000	0.0000	0.0000	0.0000	0.0000	0.0000	0.0000	0.0000	0.0000	0.0000	0.0000	0.0000
Vendor	0.0000	0.0000	0.0000	0.0000	0.0000	0.0000	0.0000	0.0000	0.0000	0.0000	0.0000	0.0000	0.0000	0.0000	0.0000	0.0000
Worker	0.0000	0.0000	0.0000	0.0000	0.0000	0.0000	0.0000	0.0000	0.0000	0.0000	0.0000	0.0000	0.0000	0.0000	0.0000	0.0000
Total	**0.0000**	**0.0000**	**0.0000**	**0.0000**	**0.0000**	**0.0000**	**0.0000**	**0.0000**	**0.0000**	**0.0000**	**0.0000**	**0.0000**	**0.0000**	**0.0000**	**0.0000**	**0.0000**

3.30 Year 7 Month 5 - 2026

Mitigated Construction On-Site

	ROG	NOx	CO	SO2	Fugitive PM10	Exhaust PM10	PM10 Total	Fugitive PM2.5	Exhaust PM2.5	PM2.5 Total	Bio- CO2	NBio- CO2	Total CO2	CH4	N2O	CO2e
Category	tons/yr										MT/yr					
Off-Road	4.4900e-003	0.0436	0.1850	3.4000e-004		5.1000e-004	5.1000e-004		5.1000e-004	5.1000e-004	0.0000	28.3746	28.3746	7.9000e-003	0.0000	28.5406
Total	**4.4900e-003**	**0.0436**	**0.1850**	**3.4000e-004**		**5.1000e-004**	**5.1000e-004**		**5.1000e-004**	**5.1000e-004**	**0.0000**	**28.3746**	**28.3746**	**7.9000e-003**	**0.0000**	**28.5406**

Mitigated Construction Off-Site

	ROG	NOx	CO	SO2	Fugitive PM10	Exhaust PM10	PM10 Total	Fugitive PM2.5	Exhaust PM2.5	PM2.5 Total	Bio- CO2	NBio- CO2	Total CO2	CH4	N2O	CO2e
Category	tons/yr										MT/yr					
Hauling	0.0000	0.0000	0.0000	0.0000	0.0000	0.0000	0.0000	0.0000	0.0000	0.0000	0.0000	0.0000	0.0000	0.0000	0.0000	0.0000
Vendor	0.0000	0.0000	0.0000	0.0000	0.0000	0.0000	0.0000	0.0000	0.0000	0.0000	0.0000	0.0000	0.0000	0.0000	0.0000	0.0000
Worker	0.0000	0.0000	0.0000	0.0000	0.0000	0.0000	0.0000	0.0000	0.0000	0.0000	0.0000	0.0000	0.0000	0.0000	0.0000	0.0000
Total	**0.0000**	**0.0000**	**0.0000**	**0.0000**	**0.0000**	**0.0000**	**0.0000**	**0.0000**	**0.0000**	**0.0000**	**0.0000**	**0.0000**	**0.0000**	**0.0000**	**0.0000**	**0.0000**

3.31 Year 7 Month 6 - 2026

Unmitigated Construction On-Site

	ROG	NOx	CO	SO2	Fugitive PM10	Exhaust PM10	PM10 Total	Fugitive PM2.5	Exhaust PM2.5	PM2.5 Total	Bio- CO2	NBio- CO2	Total CO2	CH4	N2O	CO2e
Category	tons/yr										MT/yr					
Off-Road	0.0119	0.1042	0.1012	2.1000e-004		4.5000e-003	4.5000e-003		4.1900e-003	4.1900e-003	0.0000	17.5223	17.5223	5.0300e-003	0.0000	17.6279
Total	**0.0119**	**0.1042**	**0.1012**	**2.1000e-004**		**4.5000e-003**	**4.5000e-003**		**4.1900e-003**	**4.1900e-003**	**0.0000**	**17.5223**	**17.5223**	**5.0300e-003**	**0.0000**	**17.6279**

Unmitigated Construction Off-Site

	ROG	NOx	CO	SO2	Fugitive PM10	Exhaust PM10	PM10 Total	Fugitive PM2.5	Exhaust PM2.5	PM2.5 Total	Bio- CO2	NBio- CO2	Total CO2	CH4	N2O	CO2e
Category	tons/yr										MT/yr					
Hauling	0.0000	0.0000	0.0000	0.0000	0.0000	0.0000	0.0000	0.0000	0.0000	0.0000	0.0000	0.0000	0.0000	0.0000	0.0000	0.0000
Vendor	0.0000	0.0000	0.0000	0.0000	0.0000	0.0000	0.0000	0.0000	0.0000	0.0000	0.0000	0.0000	0.0000	0.0000	0.0000	0.0000
Worker	0.0000	0.0000	0.0000	0.0000	0.0000	0.0000	0.0000	0.0000	0.0000	0.0000	0.0000	0.0000	0.0000	0.0000	0.0000	0.0000
Total	**0.0000**	**0.0000**	**0.0000**	**0.0000**	**0.0000**	**0.0000**	**0.0000**	**0.0000**	**0.0000**	**0.0000**	**0.0000**	**0.0000**	**0.0000**	**0.0000**	**0.0000**	**0.0000**

3.31 Year 7 Month 6 - 2026

Mitigated Construction On-Site

	ROG	NOx	CO	SO2	Fugitive PM10	Exhaust PM10	PM10 Total	Fugitive PM2.5	Exhaust PM2.5	PM2.5 Total	Bio- CO2	NBio- CO2	Total CO2	CH4	N2O	CO2e
Category	tons/yr										MT/yr					
Off-Road	2.7200e-003	0.0239	0.1214	2.1000e-004		3.2000e-004	3.2000e-004		3.2000e-004	3.2000e-004	0.0000	17.5223	17.5223	5.0300e-003	0.0000	17.6279
Total	**2.7200e-003**	**0.0239**	**0.1214**	**2.1000e-004**		**3.2000e-004**	**3.2000e-004**		**3.2000e-004**	**3.2000e-004**	**0.0000**	**17.5223**	**17.5223**	**5.0300e-003**	**0.0000**	**17.6279**

Mitigated Construction Off-Site

	ROG	NOx	CO	SO2	Fugitive PM10	Exhaust PM10	PM10 Total	Fugitive PM2.5	Exhaust PM2.5	PM2.5 Total	Bio- CO2	NBio- CO2	Total CO2	CH4	N2O	CO2e
Category	tons/yr										MT/yr					
Hauling	0.0000	0.0000	0.0000	0.0000	0.0000	0.0000	0.0000	0.0000	0.0000	0.0000	0.0000	0.0000	0.0000	0.0000	0.0000	0.0000
Vendor	0.0000	0.0000	0.0000	0.0000	0.0000	0.0000	0.0000	0.0000	0.0000	0.0000	0.0000	0.0000	0.0000	0.0000	0.0000	0.0000
Worker	0.0000	0.0000	0.0000	0.0000	0.0000	0.0000	0.0000	0.0000	0.0000	0.0000	0.0000	0.0000	0.0000	0.0000	0.0000	0.0000
Total	**0.0000**	**0.0000**	**0.0000**	**0.0000**	**0.0000**	**0.0000**	**0.0000**	**0.0000**	**0.0000**	**0.0000**	**0.0000**	**0.0000**	**0.0000**	**0.0000**	**0.0000**	**0.0000**

3.32 Year 7 Month 7 - 2026

Unmitigated Construction On-Site

	ROG	NOx	CO	SO2	Fugitive PM10	Exhaust PM10	PM10 Total	Fugitive PM2.5	Exhaust PM2.5	PM2.5 Total	Bio- CO2	NBio- CO2	Total CO2	CH4	N2O	CO2e
Category	tons/yr										MT/yr					
Off-Road	0.0124	0.1082	0.1051	2.1000e-004		4.6700e-003	4.6700e-003		4.3500e-003	4.3500e-003	0.0000	18.1962	18.1962	5.2200e-003	0.0000	18.3059
Total	**0.0124**	**0.1082**	**0.1051**	**2.1000e-004**		**4.6700e-003**	**4.6700e-003**		**4.3500e-003**	**4.3500e-003**	**0.0000**	**18.1962**	**18.1962**	**5.2200e-003**	**0.0000**	**18.3059**

Unmitigated Construction Off-Site

	ROG	NOx	CO	SO2	Fugitive PM10	Exhaust PM10	PM10 Total	Fugitive PM2.5	Exhaust PM2.5	PM2.5 Total	Bio- CO2	NBio- CO2	Total CO2	CH4	N2O	CO2e
Category	tons/yr										MT/yr					
Hauling	0.0000	0.0000	0.0000	0.0000	0.0000	0.0000	0.0000	0.0000	0.0000	0.0000	0.0000	0.0000	0.0000	0.0000	0.0000	0.0000
Vendor	0.0000	0.0000	0.0000	0.0000	0.0000	0.0000	0.0000	0.0000	0.0000	0.0000	0.0000	0.0000	0.0000	0.0000	0.0000	0.0000
Worker	0.0000	0.0000	0.0000	0.0000	0.0000	0.0000	0.0000	0.0000	0.0000	0.0000	0.0000	0.0000	0.0000	0.0000	0.0000	0.0000
Total	**0.0000**	**0.0000**	**0.0000**	**0.0000**	**0.0000**	**0.0000**	**0.0000**	**0.0000**	**0.0000**	**0.0000**	**0.0000**	**0.0000**	**0.0000**	**0.0000**	**0.0000**	**0.0000**

3.32 Year 7 Month 7 - 2026

Mitigated Construction On-Site

	ROG	NOx	CO	SO2	Fugitive PM10	Exhaust PM10	PM10 Total	Fugitive PM2.5	Exhaust PM2.5	PM2.5 Total	Bio- CO2	NBio- CO2	Total CO2	CH4	N2O	CO2e
Category	tons/yr										MT/yr					
Off-Road	2.8200e-003	0.0248	0.1261	2.1000e-004		3.3000e-004	3.3000e-004		3.3000e-004	3.3000e-004	0.0000	18.1962	18.1962	5.2200e-003	0.0000	18.3059
Total	**2.8200e-003**	**0.0248**	**0.1261**	**2.1000e-004**		**3.3000e-004**	**3.3000e-004**		**3.3000e-004**	**3.3000e-004**	**0.0000**	**18.1962**	**18.1962**	**5.2200e-003**	**0.0000**	**18.3059**

Mitigated Construction Off-Site

	ROG	NOx	CO	SO2	Fugitive PM10	Exhaust PM10	PM10 Total	Fugitive PM2.5	Exhaust PM2.5	PM2.5 Total	Bio- CO2	NBio- CO2	Total CO2	CH4	N2O	CO2e
Category	tons/yr										MT/yr					
Hauling	0.0000	0.0000	0.0000	0.0000	0.0000	0.0000	0.0000	0.0000	0.0000	0.0000	0.0000	0.0000	0.0000	0.0000	0.0000	0.0000
Vendor	0.0000	0.0000	0.0000	0.0000	0.0000	0.0000	0.0000	0.0000	0.0000	0.0000	0.0000	0.0000	0.0000	0.0000	0.0000	0.0000
Worker	0.0000	0.0000	0.0000	0.0000	0.0000	0.0000	0.0000	0.0000	0.0000	0.0000	0.0000	0.0000	0.0000	0.0000	0.0000	0.0000
Total	**0.0000**	**0.0000**	**0.0000**	**0.0000**	**0.0000**	**0.0000**	**0.0000**	**0.0000**	**0.0000**	**0.0000**	**0.0000**	**0.0000**	**0.0000**	**0.0000**	**0.0000**	**0.0000**

3.33 Year 7 Month 8 - 2026

Unmitigated Construction On-Site

	ROG	NOx	CO	SO2	Fugitive PM10	Exhaust PM10	PM10 Total	Fugitive PM2.5	Exhaust PM2.5	PM2.5 Total	Bio- CO2	NBio- CO2	Total CO2	CH4	N2O	CO2e
Category	tons/yr										MT/yr					
Off-Road	0.0119	0.1042	0.1012	2.1000e-004		4.5000e-003	4.5000e-003		4.1900e-003	4.1900e-003	0.0000	17.5223	17.5223	5.0300e-003	0.0000	17.6279
Total	**0.0119**	**0.1042**	**0.1012**	**2.1000e-004**		**4.5000e-003**	**4.5000e-003**		**4.1900e-003**	**4.1900e-003**	**0.0000**	**17.5223**	**17.5223**	**5.0300e-003**	**0.0000**	**17.6279**

Unmitigated Construction Off-Site

	ROG	NOx	CO	SO2	Fugitive PM10	Exhaust PM10	PM10 Total	Fugitive PM2.5	Exhaust PM2.5	PM2.5 Total	Bio- CO2	NBio- CO2	Total CO2	CH4	N2O	CO2e
Category	tons/yr										MT/yr					
Hauling	0.0000	0.0000	0.0000	0.0000	0.0000	0.0000	0.0000	0.0000	0.0000	0.0000	0.0000	0.0000	0.0000	0.0000	0.0000	0.0000
Vendor	0.0000	0.0000	0.0000	0.0000	0.0000	0.0000	0.0000	0.0000	0.0000	0.0000	0.0000	0.0000	0.0000	0.0000	0.0000	0.0000
Worker	0.0000	0.0000	0.0000	0.0000	0.0000	0.0000	0.0000	0.0000	0.0000	0.0000	0.0000	0.0000	0.0000	0.0000	0.0000	0.0000
Total	**0.0000**	**0.0000**	**0.0000**	**0.0000**	**0.0000**	**0.0000**	**0.0000**	**0.0000**	**0.0000**	**0.0000**	**0.0000**	**0.0000**	**0.0000**	**0.0000**	**0.0000**	**0.0000**

3.33 Year 7 Month 8 - 2026

Mitigated Construction On-Site

	ROG	NOx	CO	SO2	Fugitive PM10	Exhaust PM10	PM10 Total	Fugitive PM2.5	Exhaust PM2.5	PM2.5 Total	Bio- CO2	NBio- CO2	Total CO2	CH4	N2O	CO2e
Category	tons/yr										MT/yr					
Off-Road	2.7200e-003	0.0239	0.1214	2.1000e-004		3.2000e-004	3.2000e-004		3.2000e-004	3.2000e-004	0.0000	17.5223	17.5223	5.0300e-003	0.0000	17.6279
Total	**2.7200e-003**	**0.0239**	**0.1214**	**2.1000e-004**		**3.2000e-004**	**3.2000e-004**		**3.2000e-004**	**3.2000e-004**	**0.0000**	**17.5223**	**17.5223**	**5.0300e-003**	**0.0000**	**17.6279**

Mitigated Construction Off-Site

	ROG	NOx	CO	SO2	Fugitive PM10	Exhaust PM10	PM10 Total	Fugitive PM2.5	Exhaust PM2.5	PM2.5 Total	Bio- CO2	NBio- CO2	Total CO2	CH4	N2O	CO2e
Category	tons/yr										MT/yr					
Hauling	0.0000	0.0000	0.0000	0.0000	0.0000	0.0000	0.0000	0.0000	0.0000	0.0000	0.0000	0.0000	0.0000	0.0000	0.0000	0.0000
Vendor	0.0000	0.0000	0.0000	0.0000	0.0000	0.0000	0.0000	0.0000	0.0000	0.0000	0.0000	0.0000	0.0000	0.0000	0.0000	0.0000
Worker	0.0000	0.0000	0.0000	0.0000	0.0000	0.0000	0.0000	0.0000	0.0000	0.0000	0.0000	0.0000	0.0000	0.0000	0.0000	0.0000
Total	**0.0000**	**0.0000**	**0.0000**	**0.0000**	**0.0000**	**0.0000**	**0.0000**	**0.0000**	**0.0000**	**0.0000**	**0.0000**	**0.0000**	**0.0000**	**0.0000**	**0.0000**	**0.0000**

3.34 Year 7 Month 9 - 2026

Unmitigated Construction On-Site

	ROG	NOx	CO	SO2	Fugitive PM10	Exhaust PM10	PM10 Total	Fugitive PM2.5	Exhaust PM2.5	PM2.5 Total	Bio- CO2	NBio- CO2	Total CO2	CH4	N2O	CO2e
Category	tons/yr										MT/yr					
Off-Road	0.0554	0.5277	0.3938	1.3000e-003		0.0211	0.0211		0.0194	0.0194	0.0000	113.7827	113.7827	0.0368	0.0000	114.5555
Total	**0.0554**	**0.5277**	**0.3938**	**1.3000e-003**		**0.0211**	**0.0211**		**0.0194**	**0.0194**	**0.0000**	**113.7827**	**113.7827**	**0.0368**	**0.0000**	**114.5555**

Unmitigated Construction Off-Site

	ROG	NOx	CO	SO2	Fugitive PM10	Exhaust PM10	PM10 Total	Fugitive PM2.5	Exhaust PM2.5	PM2.5 Total	Bio- CO2	NBio- CO2	Total CO2	CH4	N2O	CO2e
Category	tons/yr										MT/yr					
Hauling	0.0000	0.0000	0.0000	0.0000	0.0000	0.0000	0.0000	0.0000	0.0000	0.0000	0.0000	0.0000	0.0000	0.0000	0.0000	0.0000
Vendor	0.0000	0.0000	0.0000	0.0000	0.0000	0.0000	0.0000	0.0000	0.0000	0.0000	0.0000	0.0000	0.0000	0.0000	0.0000	0.0000
Worker	0.0000	0.0000	0.0000	0.0000	0.0000	0.0000	0.0000	0.0000	0.0000	0.0000	0.0000	0.0000	0.0000	0.0000	0.0000	0.0000
Total	**0.0000**	**0.0000**	**0.0000**	**0.0000**	**0.0000**	**0.0000**	**0.0000**	**0.0000**	**0.0000**	**0.0000**	**0.0000**	**0.0000**	**0.0000**	**0.0000**	**0.0000**	**0.0000**

3.34 Year 7 Month 9 - 2026

Mitigated Construction On-Site

	ROG	NOx	CO	SO2	Fugitive PM10	Exhaust PM10	PM10 Total	Fugitive PM2.5	Exhaust PM2.5	PM2.5 Total	Bio- CO2	NBio- CO2	Total CO2	CH4	N2O	CO2e
Category	tons/yr										MT/yr					
Off-Road	0.0159	0.0690	0.6311	1.3000e-003		2.1200e-003	2.1200e-003		2.1200e-003	2.1200e-003	0.0000	113.7825	113.7825	0.0368	0.0000	114.5553
Total	**0.0159**	**0.0690**	**0.6311**	**1.3000e-003**		**2.1200e-003**	**2.1200e-003**		**2.1200e-003**	**2.1200e-003**	**0.0000**	**113.7825**	**113.7825**	**0.0368**	**0.0000**	**114.5553**

Mitigated Construction Off-Site

	ROG	NOx	CO	SO2	Fugitive PM10	Exhaust PM10	PM10 Total	Fugitive PM2.5	Exhaust PM2.5	PM2.5 Total	Bio- CO2	NBio- CO2	Total CO2	CH4	N2O	CO2e
Category	tons/yr										MT/yr					
Hauling	0.0000	0.0000	0.0000	0.0000	0.0000	0.0000	0.0000	0.0000	0.0000	0.0000	0.0000	0.0000	0.0000	0.0000	0.0000	0.0000
Vendor	0.0000	0.0000	0.0000	0.0000	0.0000	0.0000	0.0000	0.0000	0.0000	0.0000	0.0000	0.0000	0.0000	0.0000	0.0000	0.0000
Worker	0.0000	0.0000	0.0000	0.0000	0.0000	0.0000	0.0000	0.0000	0.0000	0.0000	0.0000	0.0000	0.0000	0.0000	0.0000	0.0000
Total	**0.0000**	**0.0000**	**0.0000**	**0.0000**	**0.0000**	**0.0000**	**0.0000**	**0.0000**	**0.0000**	**0.0000**	**0.0000**	**0.0000**	**0.0000**	**0.0000**	**0.0000**	**0.0000**

3.35 Year 7 Month 10 - 2026

Unmitigated Construction On-Site

	ROG	NOx	CO	SO2	Fugitive PM10	Exhaust PM10	PM10 Total	Fugitive PM2.5	Exhaust PM2.5	PM2.5 Total	Bio- CO2	NBio- CO2	Total CO2	CH4	N2O	CO2e
Category	tons/yr										MT/yr					
Off-Road	0.0575	0.5480	0.4090	1.3500e-003		0.0219	0.0219		0.0202	0.0202	0.0000	118.1589	118.1589	0.0382	0.0000	118.9614
Total	**0.0575**	**0.5480**	**0.4090**	**1.3500e-003**		**0.0219**	**0.0219**		**0.0202**	**0.0202**	**0.0000**	**118.1589**	**118.1589**	**0.0382**	**0.0000**	**118.9614**

Unmitigated Construction Off-Site

	ROG	NOx	CO	SO2	Fugitive PM10	Exhaust PM10	PM10 Total	Fugitive PM2.5	Exhaust PM2.5	PM2.5 Total	Bio- CO2	NBio- CO2	Total CO2	CH4	N2O	CO2e
Category	tons/yr										MT/yr					
Hauling	0.0000	0.0000	0.0000	0.0000	0.0000	0.0000	0.0000	0.0000	0.0000	0.0000	0.0000	0.0000	0.0000	0.0000	0.0000	0.0000
Vendor	0.0000	0.0000	0.0000	0.0000	0.0000	0.0000	0.0000	0.0000	0.0000	0.0000	0.0000	0.0000	0.0000	0.0000	0.0000	0.0000
Worker	0.0000	0.0000	0.0000	0.0000	0.0000	0.0000	0.0000	0.0000	0.0000	0.0000	0.0000	0.0000	0.0000	0.0000	0.0000	0.0000
Total	**0.0000**	**0.0000**	**0.0000**	**0.0000**	**0.0000**	**0.0000**	**0.0000**	**0.0000**	**0.0000**	**0.0000**	**0.0000**	**0.0000**	**0.0000**	**0.0000**	**0.0000**	**0.0000**

3.35 Year 7 Month 10 - 2026

Mitigated Construction On-Site

	ROG	NOx	CO	SO2	Fugitive PM10	Exhaust PM10	PM10 Total	Fugitive PM2.5	Exhaust PM2.5	PM2.5 Total	Bio- CO2	NBio- CO2	Total CO2	CH4	N2O	CO2e
Category	tons/yr										MT/yr					
Off-Road	0.0165	0.0717	0.6553	1.3500e-003		2.2100e-003	2.2100e-003		2.2100e-003	2.2100e-003	0.0000	118.1588	118.1588	0.0382	0.0000	118.9613
Total	**0.0165**	**0.0717**	**0.6553**	**1.3500e-003**		**2.2100e-003**	**2.2100e-003**		**2.2100e-003**	**2.2100e-003**	**0.0000**	**118.1588**	**118.1588**	**0.0382**	**0.0000**	**118.9613**

Mitigated Construction Off-Site

	ROG	NOx	CO	SO2	Fugitive PM10	Exhaust PM10	PM10 Total	Fugitive PM2.5	Exhaust PM2.5	PM2.5 Total	Bio- CO2	NBio- CO2	Total CO2	CH4	N2O	CO2e
Category	tons/yr										MT/yr					
Hauling	0.0000	0.0000	0.0000	0.0000	0.0000	0.0000	0.0000	0.0000	0.0000	0.0000	0.0000	0.0000	0.0000	0.0000	0.0000	0.0000
Vendor	0.0000	0.0000	0.0000	0.0000	0.0000	0.0000	0.0000	0.0000	0.0000	0.0000	0.0000	0.0000	0.0000	0.0000	0.0000	0.0000
Worker	0.0000	0.0000	0.0000	0.0000	0.0000	0.0000	0.0000	0.0000	0.0000	0.0000	0.0000	0.0000	0.0000	0.0000	0.0000	0.0000
Total	**0.0000**	**0.0000**	**0.0000**	**0.0000**	**0.0000**	**0.0000**	**0.0000**	**0.0000**	**0.0000**	**0.0000**	**0.0000**	**0.0000**	**0.0000**	**0.0000**	**0.0000**	**0.0000**

3.36 Year 7 Month 11 - 2026

Unmitigated Construction Off-Site

	ROG	NOx	CO	SO2	Fugitive PM10	Exhaust PM10	PM10 Total	Fugitive PM2.5	Exhaust PM2.5	PM2.5 Total	Bio- CO2	NBio- CO2	Total CO2	CH4	N2O	CO2e
Category	tons/yr										MT/yr					
Hauling					0.0000	0.0000	0.0000	0.0000	0.0000	0.0000	0.0000	0.0000	0.0000	0.0000	0.0000	0.0000
Vendor					0.0000	0.0000	0.0000	0.0000	0.0000	0.0000	0.0000	0.0000	0.0000	0.0000	0.0000	0.0000
Worker					0.0000	0.0000	0.0000	0.0000	0.0000	0.0000	0.0000	0.0000	0.0000	0.0000	0.0000	0.0000
Total					**0.0000**	**0.0000**	**0.0000**	**0.0000**	**0.0000**	**0.0000**	**0.0000**	**0.0000**	**0.0000**	**0.0000**	**0.0000**	**0.0000**

Mitigated Construction Off-Site

	ROG	NOx	CO	SO2	Fugitive PM10	Exhaust PM10	PM10 Total	Fugitive PM2.5	Exhaust PM2.5	PM2.5 Total	Bio- CO2	NBio- CO2	Total CO2	CH4	N2O	CO2e
Category	tons/yr										MT/yr					
Hauling					0.0000	0.0000	0.0000	0.0000	0.0000	0.0000	0.0000	0.0000	0.0000	0.0000	0.0000	0.0000
Vendor					0.0000	0.0000	0.0000	0.0000	0.0000	0.0000	0.0000	0.0000	0.0000	0.0000	0.0000	0.0000
Worker					0.0000	0.0000	0.0000	0.0000	0.0000	0.0000	0.0000	0.0000	0.0000	0.0000	0.0000	0.0000
Total					**0.0000**	**0.0000**	**0.0000**	**0.0000**	**0.0000**	**0.0000**	**0.0000**	**0.0000**	**0.0000**	**0.0000**	**0.0000**	**0.0000**

3.37 Year 7 Month 12 - 2026

Unmitigated Construction Off-Site

	ROG	NOx	CO	SO2	Fugitive PM10	Exhaust PM10	PM10 Total	Fugitive PM2.5	Exhaust PM2.5	PM2.5 Total	Bio- CO2	NBio- CO2	Total CO2	CH4	N2O	CO2e
Category	tons/yr										MT/yr					
Hauling					0.0000	0.0000	0.0000	0.0000	0.0000	0.0000	0.0000	0.0000	0.0000	0.0000	0.0000	0.0000
Vendor					0.0000	0.0000	0.0000	0.0000	0.0000	0.0000	0.0000	0.0000	0.0000	0.0000	0.0000	0.0000
Worker					0.0000	0.0000	0.0000	0.0000	0.0000	0.0000	0.0000	0.0000	0.0000	0.0000	0.0000	0.0000
Total					**0.0000**	**0.0000**	**0.0000**	**0.0000**	**0.0000**	**0.0000**	**0.0000**	**0.0000**	**0.0000**	**0.0000**	**0.0000**	**0.0000**

Mitigated Construction Off-Site

	ROG	NOx	CO	SO2	Fugitive PM10	Exhaust PM10	PM10 Total	Fugitive PM2.5	Exhaust PM2.5	PM2.5 Total	Bio- CO2	NBio- CO2	Total CO2	CH4	N2O	CO2e
Category	tons/yr										MT/yr					
Hauling					0.0000	0.0000	0.0000	0.0000	0.0000	0.0000	0.0000	0.0000	0.0000	0.0000	0.0000	0.0000
Vendor					0.0000	0.0000	0.0000	0.0000	0.0000	0.0000	0.0000	0.0000	0.0000	0.0000	0.0000	0.0000
Worker					0.0000	0.0000	0.0000	0.0000	0.0000	0.0000	0.0000	0.0000	0.0000	0.0000	0.0000	0.0000
Total					**0.0000**	**0.0000**	**0.0000**	**0.0000**	**0.0000**	**0.0000**	**0.0000**	**0.0000**	**0.0000**	**0.0000**	**0.0000**	**0.0000**

3.38 Year 8 Month 1 - 2027

Unmitigated Construction Off-Site

	ROG	NOx	CO	SO2	Fugitive PM10	Exhaust PM10	PM10 Total	Fugitive PM2.5	Exhaust PM2.5	PM2.5 Total	Bio- CO2	NBio- CO2	Total CO2	CH4	N2O	CO2e
Category	tons/yr										MT/yr					
Hauling					0.0000	0.0000	0.0000	0.0000	0.0000	0.0000	0.0000	0.0000	0.0000	0.0000	0.0000	0.0000
Vendor					0.0000	0.0000	0.0000	0.0000	0.0000	0.0000	0.0000	0.0000	0.0000	0.0000	0.0000	0.0000
Worker					0.0000	0.0000	0.0000	0.0000	0.0000	0.0000	0.0000	0.0000	0.0000	0.0000	0.0000	0.0000
Total					**0.0000**	**0.0000**	**0.0000**	**0.0000**	**0.0000**	**0.0000**	**0.0000**	**0.0000**	**0.0000**	**0.0000**	**0.0000**	**0.0000**

Mitigated Construction Off-Site

	ROG	NOx	CO	SO2	Fugitive PM10	Exhaust PM10	PM10 Total	Fugitive PM2.5	Exhaust PM2.5	PM2.5 Total	Bio- CO2	NBio- CO2	Total CO2	CH4	N2O	CO2e
Category	tons/yr										MT/yr					
Hauling					0.0000	0.0000	0.0000	0.0000	0.0000	0.0000	0.0000	0.0000	0.0000	0.0000	0.0000	0.0000
Vendor					0.0000	0.0000	0.0000	0.0000	0.0000	0.0000	0.0000	0.0000	0.0000	0.0000	0.0000	0.0000
Worker					0.0000	0.0000	0.0000	0.0000	0.0000	0.0000	0.0000	0.0000	0.0000	0.0000	0.0000	0.0000
Total					**0.0000**	**0.0000**	**0.0000**	**0.0000**	**0.0000**	**0.0000**	**0.0000**	**0.0000**	**0.0000**	**0.0000**	**0.0000**	**0.0000**

3.39 Year 8 Month 2 - 2027

Unmitigated Construction Off-Site

	ROG	NOx	CO	SO2	Fugitive PM10	Exhaust PM10	PM10 Total	Fugitive PM2.5	Exhaust PM2.5	PM2.5 Total	Bio- CO2	NBio- CO2	Total CO2	CH4	N2O	CO2e
Category	tons/yr										MT/yr					
Hauling					0.0000	0.0000	0.0000	0.0000	0.0000	0.0000	0.0000	0.0000	0.0000	0.0000	0.0000	0.0000
Vendor					0.0000	0.0000	0.0000	0.0000	0.0000	0.0000	0.0000	0.0000	0.0000	0.0000	0.0000	0.0000
Worker					0.0000	0.0000	0.0000	0.0000	0.0000	0.0000	0.0000	0.0000	0.0000	0.0000	0.0000	0.0000
Total					**0.0000**	**0.0000**	**0.0000**	**0.0000**	**0.0000**	**0.0000**	**0.0000**	**0.0000**	**0.0000**	**0.0000**	**0.0000**	**0.0000**

Mitigated Construction Off-Site

	ROG	NOx	CO	SO2	Fugitive PM10	Exhaust PM10	PM10 Total	Fugitive PM2.5	Exhaust PM2.5	PM2.5 Total	Bio- CO2	NBio- CO2	Total CO2	CH4	N2O	CO2e
Category	tons/yr										MT/yr					
Hauling					0.0000	0.0000	0.0000	0.0000	0.0000	0.0000	0.0000	0.0000	0.0000	0.0000	0.0000	0.0000
Vendor					0.0000	0.0000	0.0000	0.0000	0.0000	0.0000	0.0000	0.0000	0.0000	0.0000	0.0000	0.0000
Worker					0.0000	0.0000	0.0000	0.0000	0.0000	0.0000	0.0000	0.0000	0.0000	0.0000	0.0000	0.0000
Total					**0.0000**	**0.0000**	**0.0000**	**0.0000**	**0.0000**	**0.0000**	**0.0000**	**0.0000**	**0.0000**	**0.0000**	**0.0000**	**0.0000**

3.40 Year 8 Month 3 - 2027

Unmitigated Construction Off-Site

	ROG	NOx	CO	SO2	Fugitive PM10	Exhaust PM10	PM10 Total	Fugitive PM2.5	Exhaust PM2.5	PM2.5 Total	Bio- CO2	NBio- CO2	Total CO2	CH4	N2O	CO2e
Category	tons/yr										MT/yr					
Hauling					0.0000	0.0000	0.0000	0.0000	0.0000	0.0000	0.0000	0.0000	0.0000	0.0000	0.0000	0.0000
Vendor					0.0000	0.0000	0.0000	0.0000	0.0000	0.0000	0.0000	0.0000	0.0000	0.0000	0.0000	0.0000
Worker					0.0000	0.0000	0.0000	0.0000	0.0000	0.0000	0.0000	0.0000	0.0000	0.0000	0.0000	0.0000
Total					**0.0000**	**0.0000**	**0.0000**	**0.0000**	**0.0000**	**0.0000**	**0.0000**	**0.0000**	**0.0000**	**0.0000**	**0.0000**	**0.0000**

Mitigated Construction Off-Site

	ROG	NOx	CO	SO2	Fugitive PM10	Exhaust PM10	PM10 Total	Fugitive PM2.5	Exhaust PM2.5	PM2.5 Total	Bio- CO2	NBio- CO2	Total CO2	CH4	N2O	CO2e
Category	tons/yr										MT/yr					
Hauling					0.0000	0.0000	0.0000	0.0000	0.0000	0.0000	0.0000	0.0000	0.0000	0.0000	0.0000	0.0000
Vendor					0.0000	0.0000	0.0000	0.0000	0.0000	0.0000	0.0000	0.0000	0.0000	0.0000	0.0000	0.0000
Worker					0.0000	0.0000	0.0000	0.0000	0.0000	0.0000	0.0000	0.0000	0.0000	0.0000	0.0000	0.0000
Total					**0.0000**	**0.0000**	**0.0000**	**0.0000**	**0.0000**	**0.0000**	**0.0000**	**0.0000**	**0.0000**	**0.0000**	**0.0000**	**0.0000**

3.41 Year 8 Month 4 - 2027

Unmitigated Construction Off-Site

	ROG	NOx	CO	SO2	Fugitive PM10	Exhaust PM10	PM10 Total	Fugitive PM2.5	Exhaust PM2.5	PM2.5 Total	Bio- CO2	NBio- CO2	Total CO2	CH4	N2O	CO2e
Category	tons/yr										MT/yr					
Hauling					0.0000	0.0000	0.0000	0.0000	0.0000	0.0000	0.0000	0.0000	0.0000	0.0000	0.0000	0.0000
Vendor					0.0000	0.0000	0.0000	0.0000	0.0000	0.0000	0.0000	0.0000	0.0000	0.0000	0.0000	0.0000
Worker					0.0000	0.0000	0.0000	0.0000	0.0000	0.0000	0.0000	0.0000	0.0000	0.0000	0.0000	0.0000
Total					**0.0000**	**0.0000**	**0.0000**	**0.0000**	**0.0000**	**0.0000**	**0.0000**	**0.0000**	**0.0000**	**0.0000**	**0.0000**	**0.0000**

Mitigated Construction Off-Site

	ROG	NOx	CO	SO2	Fugitive PM10	Exhaust PM10	PM10 Total	Fugitive PM2.5	Exhaust PM2.5	PM2.5 Total	Bio- CO2	NBio- CO2	Total CO2	CH4	N2O	CO2e
Category	tons/yr										MT/yr					
Hauling					0.0000	0.0000	0.0000	0.0000	0.0000	0.0000	0.0000	0.0000	0.0000	0.0000	0.0000	0.0000
Vendor					0.0000	0.0000	0.0000	0.0000	0.0000	0.0000	0.0000	0.0000	0.0000	0.0000	0.0000	0.0000
Worker					0.0000	0.0000	0.0000	0.0000	0.0000	0.0000	0.0000	0.0000	0.0000	0.0000	0.0000	0.0000
Total					**0.0000**	**0.0000**	**0.0000**	**0.0000**	**0.0000**	**0.0000**	**0.0000**	**0.0000**	**0.0000**	**0.0000**	**0.0000**	**0.0000**

3.42 Year 8 Month 5 - 2027

Unmitigated Construction Off-Site

	ROG	NOx	CO	SO2	Fugitive PM10	Exhaust PM10	PM10 Total	Fugitive PM2.5	Exhaust PM2.5	PM2.5 Total	Bio- CO2	NBio- CO2	Total CO2	CH4	N2O	CO2e
Category	tons/yr										MT/yr					
Hauling					0.0000	0.0000	0.0000	0.0000	0.0000	0.0000	0.0000	0.0000	0.0000	0.0000	0.0000	0.0000
Vendor					0.0000	0.0000	0.0000	0.0000	0.0000	0.0000	0.0000	0.0000	0.0000	0.0000	0.0000	0.0000
Worker					0.0000	0.0000	0.0000	0.0000	0.0000	0.0000	0.0000	0.0000	0.0000	0.0000	0.0000	0.0000
Total					**0.0000**	**0.0000**	**0.0000**	**0.0000**	**0.0000**	**0.0000**	**0.0000**	**0.0000**	**0.0000**	**0.0000**	**0.0000**	**0.0000**

Mitigated Construction Off-Site

	ROG	NOx	CO	SO2	Fugitive PM10	Exhaust PM10	PM10 Total	Fugitive PM2.5	Exhaust PM2.5	PM2.5 Total	Bio- CO2	NBio- CO2	Total CO2	CH4	N2O	CO2e
Category	tons/yr										MT/yr					
Hauling					0.0000	0.0000	0.0000	0.0000	0.0000	0.0000	0.0000	0.0000	0.0000	0.0000	0.0000	0.0000
Vendor					0.0000	0.0000	0.0000	0.0000	0.0000	0.0000	0.0000	0.0000	0.0000	0.0000	0.0000	0.0000
Worker					0.0000	0.0000	0.0000	0.0000	0.0000	0.0000	0.0000	0.0000	0.0000	0.0000	0.0000	0.0000
Total					**0.0000**	**0.0000**	**0.0000**	**0.0000**	**0.0000**	**0.0000**	**0.0000**	**0.0000**	**0.0000**	**0.0000**	**0.0000**	**0.0000**

3.43 Year 8 Month 6 - 2027

Unmitigated Construction Off-Site

	ROG	NOx	CO	SO2	Fugitive PM10	Exhaust PM10	PM10 Total	Fugitive PM2.5	Exhaust PM2.5	PM2.5 Total	Bio- CO2	NBio- CO2	Total CO2	CH4	N2O	CO2e
Category	tons/yr										MT/yr					
Hauling					0.0000	0.0000	0.0000	0.0000	0.0000	0.0000	0.0000	0.0000	0.0000	0.0000	0.0000	0.0000
Vendor					0.0000	0.0000	0.0000	0.0000	0.0000	0.0000	0.0000	0.0000	0.0000	0.0000	0.0000	0.0000
Worker					0.0000	0.0000	0.0000	0.0000	0.0000	0.0000	0.0000	0.0000	0.0000	0.0000	0.0000	0.0000
Total					**0.0000**	**0.0000**	**0.0000**	**0.0000**	**0.0000**	**0.0000**	**0.0000**	**0.0000**	**0.0000**	**0.0000**	**0.0000**	**0.0000**

Mitigated Construction Off-Site

	ROG	NOx	CO	SO2	Fugitive PM10	Exhaust PM10	PM10 Total	Fugitive PM2.5	Exhaust PM2.5	PM2.5 Total	Bio- CO2	NBio- CO2	Total CO2	CH4	N2O	CO2e
Category	tons/yr										MT/yr					
Hauling					0.0000	0.0000	0.0000	0.0000	0.0000	0.0000	0.0000	0.0000	0.0000	0.0000	0.0000	0.0000
Vendor					0.0000	0.0000	0.0000	0.0000	0.0000	0.0000	0.0000	0.0000	0.0000	0.0000	0.0000	0.0000
Worker					0.0000	0.0000	0.0000	0.0000	0.0000	0.0000	0.0000	0.0000	0.0000	0.0000	0.0000	0.0000
Total					**0.0000**	**0.0000**	**0.0000**	**0.0000**	**0.0000**	**0.0000**	**0.0000**	**0.0000**	**0.0000**	**0.0000**	**0.0000**	**0.0000**

3.44 Year 8 Month 7 - 2027

Unmitigated Construction Off-Site

	ROG	NOx	CO	SO2	Fugitive PM10	Exhaust PM10	PM10 Total	Fugitive PM2.5	Exhaust PM2.5	PM2.5 Total	Bio- CO2	NBio- CO2	Total CO2	CH4	N2O	CO2e
Category	tons/yr										MT/yr					
Hauling					0.0000	0.0000	0.0000	0.0000	0.0000	0.0000	0.0000	0.0000	0.0000	0.0000	0.0000	0.0000
Vendor					0.0000	0.0000	0.0000	0.0000	0.0000	0.0000	0.0000	0.0000	0.0000	0.0000	0.0000	0.0000
Worker					0.0000	0.0000	0.0000	0.0000	0.0000	0.0000	0.0000	0.0000	0.0000	0.0000	0.0000	0.0000
Total					**0.0000**	**0.0000**	**0.0000**	**0.0000**	**0.0000**	**0.0000**	**0.0000**	**0.0000**	**0.0000**	**0.0000**	**0.0000**	**0.0000**

Mitigated Construction Off-Site

	ROG	NOx	CO	SO2	Fugitive PM10	Exhaust PM10	PM10 Total	Fugitive PM2.5	Exhaust PM2.5	PM2.5 Total	Bio- CO2	NBio- CO2	Total CO2	CH4	N2O	CO2e
Category	tons/yr										MT/yr					
Hauling					0.0000	0.0000	0.0000	0.0000	0.0000	0.0000	0.0000	0.0000	0.0000	0.0000	0.0000	0.0000
Vendor					0.0000	0.0000	0.0000	0.0000	0.0000	0.0000	0.0000	0.0000	0.0000	0.0000	0.0000	0.0000
Worker					0.0000	0.0000	0.0000	0.0000	0.0000	0.0000	0.0000	0.0000	0.0000	0.0000	0.0000	0.0000
Total					**0.0000**	**0.0000**	**0.0000**	**0.0000**	**0.0000**	**0.0000**	**0.0000**	**0.0000**	**0.0000**	**0.0000**	**0.0000**	**0.0000**

3.45 Year 8 Month 8 - 2027

Unmitigated Construction Off-Site

	ROG	NOx	CO	SO2	Fugitive PM10	Exhaust PM10	PM10 Total	Fugitive PM2.5	Exhaust PM2.5	PM2.5 Total	Bio- CO2	NBio- CO2	Total CO2	CH4	N2O	CO2e
Category	tons/yr										MT/yr					
Hauling					0.0000	0.0000	0.0000	0.0000	0.0000	0.0000	0.0000	0.0000	0.0000	0.0000	0.0000	0.0000
Vendor					0.0000	0.0000	0.0000	0.0000	0.0000	0.0000	0.0000	0.0000	0.0000	0.0000	0.0000	0.0000
Worker					0.0000	0.0000	0.0000	0.0000	0.0000	0.0000	0.0000	0.0000	0.0000	0.0000	0.0000	0.0000
Total					**0.0000**	**0.0000**	**0.0000**	**0.0000**	**0.0000**	**0.0000**	**0.0000**	**0.0000**	**0.0000**	**0.0000**	**0.0000**	**0.0000**

Mitigated Construction Off-Site

	ROG	NOx	CO	SO2	Fugitive PM10	Exhaust PM10	PM10 Total	Fugitive PM2.5	Exhaust PM2.5	PM2.5 Total	Bio- CO2	NBio- CO2	Total CO2	CH4	N2O	CO2e
Category	tons/yr										MT/yr					
Hauling					0.0000	0.0000	0.0000	0.0000	0.0000	0.0000	0.0000	0.0000	0.0000	0.0000	0.0000	0.0000
Vendor					0.0000	0.0000	0.0000	0.0000	0.0000	0.0000	0.0000	0.0000	0.0000	0.0000	0.0000	0.0000
Worker					0.0000	0.0000	0.0000	0.0000	0.0000	0.0000	0.0000	0.0000	0.0000	0.0000	0.0000	0.0000
Total					**0.0000**	**0.0000**	**0.0000**	**0.0000**	**0.0000**	**0.0000**	**0.0000**	**0.0000**	**0.0000**	**0.0000**	**0.0000**	**0.0000**

3.46 Year 8 Month 9 - 2027

Unmitigated Construction Off-Site

	ROG	NOx	CO	SO2	Fugitive PM10	Exhaust PM10	PM10 Total	Fugitive PM2.5	Exhaust PM2.5	PM2.5 Total	Bio- CO2	NBio- CO2	Total CO2	CH4	N2O	CO2e
Category	tons/yr										MT/yr					
Hauling					0.0000	0.0000	0.0000	0.0000	0.0000	0.0000	0.0000	0.0000	0.0000	0.0000	0.0000	0.0000
Vendor					0.0000	0.0000	0.0000	0.0000	0.0000	0.0000	0.0000	0.0000	0.0000	0.0000	0.0000	0.0000
Worker					0.0000	0.0000	0.0000	0.0000	0.0000	0.0000	0.0000	0.0000	0.0000	0.0000	0.0000	0.0000
Total					**0.0000**	**0.0000**	**0.0000**	**0.0000**	**0.0000**	**0.0000**	**0.0000**	**0.0000**	**0.0000**	**0.0000**	**0.0000**	**0.0000**

Mitigated Construction Off-Site

	ROG	NOx	CO	SO2	Fugitive PM10	Exhaust PM10	PM10 Total	Fugitive PM2.5	Exhaust PM2.5	PM2.5 Total	Bio- CO2	NBio- CO2	Total CO2	CH4	N2O	CO2e
Category	tons/yr										MT/yr					
Hauling					0.0000	0.0000	0.0000	0.0000	0.0000	0.0000	0.0000	0.0000	0.0000	0.0000	0.0000	0.0000
Vendor					0.0000	0.0000	0.0000	0.0000	0.0000	0.0000	0.0000	0.0000	0.0000	0.0000	0.0000	0.0000
Worker					0.0000	0.0000	0.0000	0.0000	0.0000	0.0000	0.0000	0.0000	0.0000	0.0000	0.0000	0.0000
Total					**0.0000**	**0.0000**	**0.0000**	**0.0000**	**0.0000**	**0.0000**	**0.0000**	**0.0000**	**0.0000**	**0.0000**	**0.0000**	**0.0000**

3.47 Year 8 Month 10 - 2027

Unmitigated Construction Off-Site

	ROG	NOx	CO	SO2	Fugitive PM10	Exhaust PM10	PM10 Total	Fugitive PM2.5	Exhaust PM2.5	PM2.5 Total	Bio- CO2	NBio- CO2	Total CO2	CH4	N2O	CO2e
Category	tons/yr										MT/yr					
Hauling					0.0000	0.0000	0.0000	0.0000	0.0000	0.0000	0.0000	0.0000	0.0000	0.0000	0.0000	0.0000
Vendor					0.0000	0.0000	0.0000	0.0000	0.0000	0.0000	0.0000	0.0000	0.0000	0.0000	0.0000	0.0000
Worker					0.0000	0.0000	0.0000	0.0000	0.0000	0.0000	0.0000	0.0000	0.0000	0.0000	0.0000	0.0000
Total					**0.0000**	**0.0000**	**0.0000**	**0.0000**	**0.0000**	**0.0000**	**0.0000**	**0.0000**	**0.0000**	**0.0000**	**0.0000**	**0.0000**

Mitigated Construction Off-Site

	ROG	NOx	CO	SO2	Fugitive PM10	Exhaust PM10	PM10 Total	Fugitive PM2.5	Exhaust PM2.5	PM2.5 Total	Bio- CO2	NBio- CO2	Total CO2	CH4	N2O	CO2e
Category	tons/yr										MT/yr					
Hauling					0.0000	0.0000	0.0000	0.0000	0.0000	0.0000	0.0000	0.0000	0.0000	0.0000	0.0000	0.0000
Vendor					0.0000	0.0000	0.0000	0.0000	0.0000	0.0000	0.0000	0.0000	0.0000	0.0000	0.0000	0.0000
Worker					0.0000	0.0000	0.0000	0.0000	0.0000	0.0000	0.0000	0.0000	0.0000	0.0000	0.0000	0.0000
Total					**0.0000**	**0.0000**	**0.0000**	**0.0000**	**0.0000**	**0.0000**	**0.0000**	**0.0000**	**0.0000**	**0.0000**	**0.0000**	**0.0000**

3.48 Year 8 Month 11 - 2027

Unmitigated Construction Off-Site

	ROG	NOx	CO	SO2	Fugitive PM10	Exhaust PM10	PM10 Total	Fugitive PM2.5	Exhaust PM2.5	PM2.5 Total	Bio- CO2	NBio- CO2	Total CO2	CH4	N2O	CO2e
Category	tons/yr										MT/yr					
Hauling					0.0000	0.0000	0.0000	0.0000	0.0000	0.0000	0.0000	0.0000	0.0000	0.0000	0.0000	0.0000
Vendor					0.0000	0.0000	0.0000	0.0000	0.0000	0.0000	0.0000	0.0000	0.0000	0.0000	0.0000	0.0000
Worker					0.0000	0.0000	0.0000	0.0000	0.0000	0.0000	0.0000	0.0000	0.0000	0.0000	0.0000	0.0000
Total					**0.0000**	**0.0000**	**0.0000**	**0.0000**	**0.0000**	**0.0000**	**0.0000**	**0.0000**	**0.0000**	**0.0000**	**0.0000**	**0.0000**

Mitigated Construction Off-Site

	ROG	NOx	CO	SO2	Fugitive PM10	Exhaust PM10	PM10 Total	Fugitive PM2.5	Exhaust PM2.5	PM2.5 Total	Bio- CO2	NBio- CO2	Total CO2	CH4	N2O	CO2e
Category	tons/yr										MT/yr					
Hauling					0.0000	0.0000	0.0000	0.0000	0.0000	0.0000	0.0000	0.0000	0.0000	0.0000	0.0000	0.0000
Vendor					0.0000	0.0000	0.0000	0.0000	0.0000	0.0000	0.0000	0.0000	0.0000	0.0000	0.0000	0.0000
Worker					0.0000	0.0000	0.0000	0.0000	0.0000	0.0000	0.0000	0.0000	0.0000	0.0000	0.0000	0.0000
Total					**0.0000**	**0.0000**	**0.0000**	**0.0000**	**0.0000**	**0.0000**	**0.0000**	**0.0000**	**0.0000**	**0.0000**	**0.0000**	**0.0000**

3.49 Year 8 Month 12 - 2027

Unmitigated Construction Off-Site

	ROG	NOx	CO	SO2	Fugitive PM10	Exhaust PM10	PM10 Total	Fugitive PM2.5	Exhaust PM2.5	PM2.5 Total	Bio- CO2	NBio- CO2	Total CO2	CH4	N2O	CO2e
Category	tons/yr										MT/yr					
Hauling					0.0000	0.0000	0.0000	0.0000	0.0000	0.0000	0.0000	0.0000	0.0000	0.0000	0.0000	0.0000
Vendor					0.0000	0.0000	0.0000	0.0000	0.0000	0.0000	0.0000	0.0000	0.0000	0.0000	0.0000	0.0000
Worker					0.0000	0.0000	0.0000	0.0000	0.0000	0.0000	0.0000	0.0000	0.0000	0.0000	0.0000	0.0000
Total					**0.0000**	**0.0000**	**0.0000**	**0.0000**	**0.0000**	**0.0000**	**0.0000**	**0.0000**	**0.0000**	**0.0000**	**0.0000**	**0.0000**

Mitigated Construction Off-Site

	ROG	NOx	CO	SO2	Fugitive PM10	Exhaust PM10	PM10 Total	Fugitive PM2.5	Exhaust PM2.5	PM2.5 Total	Bio- CO2	NBio- CO2	Total CO2	CH4	N2O	CO2e
Category	tons/yr										MT/yr					
Hauling					0.0000	0.0000	0.0000	0.0000	0.0000	0.0000	0.0000	0.0000	0.0000	0.0000	0.0000	0.0000
Vendor					0.0000	0.0000	0.0000	0.0000	0.0000	0.0000	0.0000	0.0000	0.0000	0.0000	0.0000	0.0000
Worker					0.0000	0.0000	0.0000	0.0000	0.0000	0.0000	0.0000	0.0000	0.0000	0.0000	0.0000	0.0000
Total					**0.0000**	**0.0000**	**0.0000**	**0.0000**	**0.0000**	**0.0000**	**0.0000**	**0.0000**	**0.0000**	**0.0000**	**0.0000**	**0.0000**

3.50 Year 9 Month 1 - 2028

Unmitigated Construction Off-Site

	ROG	NOx	CO	SO2	Fugitive PM10	Exhaust PM10	PM10 Total	Fugitive PM2.5	Exhaust PM2.5	PM2.5 Total	Bio- CO2	NBio- CO2	Total CO2	CH4	N2O	CO2e
Category	tons/yr										MT/yr					
Hauling					0.0000	0.0000	0.0000	0.0000	0.0000	0.0000	0.0000	0.0000	0.0000	0.0000	0.0000	0.0000
Vendor					0.0000	0.0000	0.0000	0.0000	0.0000	0.0000	0.0000	0.0000	0.0000	0.0000	0.0000	0.0000
Worker					0.0000	0.0000	0.0000	0.0000	0.0000	0.0000	0.0000	0.0000	0.0000	0.0000	0.0000	0.0000
Total					**0.0000**	**0.0000**	**0.0000**	**0.0000**	**0.0000**	**0.0000**	**0.0000**	**0.0000**	**0.0000**	**0.0000**	**0.0000**	**0.0000**

Mitigated Construction Off-Site

	ROG	NOx	CO	SO2	Fugitive PM10	Exhaust PM10	PM10 Total	Fugitive PM2.5	Exhaust PM2.5	PM2.5 Total	Bio- CO2	NBio- CO2	Total CO2	CH4	N2O	CO2e
Category	tons/yr										MT/yr					
Hauling					0.0000	0.0000	0.0000	0.0000	0.0000	0.0000	0.0000	0.0000	0.0000	0.0000	0.0000	0.0000
Vendor					0.0000	0.0000	0.0000	0.0000	0.0000	0.0000	0.0000	0.0000	0.0000	0.0000	0.0000	0.0000
Worker					0.0000	0.0000	0.0000	0.0000	0.0000	0.0000	0.0000	0.0000	0.0000	0.0000	0.0000	0.0000
Total					**0.0000**	**0.0000**	**0.0000**	**0.0000**	**0.0000**	**0.0000**	**0.0000**	**0.0000**	**0.0000**	**0.0000**	**0.0000**	**0.0000**

3.51 Year 9 Month 2 - 2028

Unmitigated Construction Off-Site

	ROG	NOx	CO	SO2	Fugitive PM10	Exhaust PM10	PM10 Total	Fugitive PM2.5	Exhaust PM2.5	PM2.5 Total	Bio- CO2	NBio- CO2	Total CO2	CH4	N2O	CO2e
Category	tons/yr										MT/yr					
Hauling					0.0000	0.0000	0.0000	0.0000	0.0000	0.0000	0.0000	0.0000	0.0000	0.0000	0.0000	0.0000
Vendor					0.0000	0.0000	0.0000	0.0000	0.0000	0.0000	0.0000	0.0000	0.0000	0.0000	0.0000	0.0000
Worker					0.0000	0.0000	0.0000	0.0000	0.0000	0.0000	0.0000	0.0000	0.0000	0.0000	0.0000	0.0000
Total					**0.0000**	**0.0000**	**0.0000**	**0.0000**	**0.0000**	**0.0000**	**0.0000**	**0.0000**	**0.0000**	**0.0000**	**0.0000**	**0.0000**

Mitigated Construction Off-Site

	ROG	NOx	CO	SO2	Fugitive PM10	Exhaust PM10	PM10 Total	Fugitive PM2.5	Exhaust PM2.5	PM2.5 Total	Bio- CO2	NBio- CO2	Total CO2	CH4	N2O	CO2e
Category	tons/yr										MT/yr					
Hauling					0.0000	0.0000	0.0000	0.0000	0.0000	0.0000	0.0000	0.0000	0.0000	0.0000	0.0000	0.0000
Vendor					0.0000	0.0000	0.0000	0.0000	0.0000	0.0000	0.0000	0.0000	0.0000	0.0000	0.0000	0.0000
Worker					0.0000	0.0000	0.0000	0.0000	0.0000	0.0000	0.0000	0.0000	0.0000	0.0000	0.0000	0.0000
Total					**0.0000**	**0.0000**	**0.0000**	**0.0000**	**0.0000**	**0.0000**	**0.0000**	**0.0000**	**0.0000**	**0.0000**	**0.0000**	**0.0000**

3.52 Year 9 Month 3 - 2028

Unmitigated Construction Off-Site

	ROG	NOx	CO	SO2	Fugitive PM10	Exhaust PM10	PM10 Total	Fugitive PM2.5	Exhaust PM2.5	PM2.5 Total	Bio- CO2	NBio- CO2	Total CO2	CH4	N2O	CO2e
Category	tons/yr										MT/yr					
Hauling					0.0000	0.0000	0.0000	0.0000	0.0000	0.0000	0.0000	0.0000	0.0000	0.0000	0.0000	0.0000
Vendor					0.0000	0.0000	0.0000	0.0000	0.0000	0.0000	0.0000	0.0000	0.0000	0.0000	0.0000	0.0000
Worker					0.0000	0.0000	0.0000	0.0000	0.0000	0.0000	0.0000	0.0000	0.0000	0.0000	0.0000	0.0000
Total					**0.0000**	**0.0000**	**0.0000**	**0.0000**	**0.0000**	**0.0000**	**0.0000**	**0.0000**	**0.0000**	**0.0000**	**0.0000**	**0.0000**

Mitigated Construction Off-Site

	ROG	NOx	CO	SO2	Fugitive PM10	Exhaust PM10	PM10 Total	Fugitive PM2.5	Exhaust PM2.5	PM2.5 Total	Bio- CO2	NBio- CO2	Total CO2	CH4	N2O	CO2e
Category	tons/yr										MT/yr					
Hauling					0.0000	0.0000	0.0000	0.0000	0.0000	0.0000	0.0000	0.0000	0.0000	0.0000	0.0000	0.0000
Vendor					0.0000	0.0000	0.0000	0.0000	0.0000	0.0000	0.0000	0.0000	0.0000	0.0000	0.0000	0.0000
Worker					0.0000	0.0000	0.0000	0.0000	0.0000	0.0000	0.0000	0.0000	0.0000	0.0000	0.0000	0.0000
Total					**0.0000**	**0.0000**	**0.0000**	**0.0000**	**0.0000**	**0.0000**	**0.0000**	**0.0000**	**0.0000**	**0.0000**	**0.0000**	**0.0000**

3.53 Year 9 Month 4 - 2028

Unmitigated Construction On-Site

	ROG	NOx	CO	SO2	Fugitive PM10	Exhaust PM10	PM10 Total	Fugitive PM2.5	Exhaust PM2.5	PM2.5 Total	Bio- CO2	NBio- CO2	Total CO2	CH4	N2O	CO2e
Category	tons/yr										MT/yr					
Off-Road	4.7800e-003	0.0484	0.0265	9.0000e-005		2.0600e-003	2.0600e-003		1.8900e-003	1.8900e-003	0.0000	7.7498	7.7498	2.5100e-003	0.0000	7.8024
Total	**4.7800e-003**	**0.0484**	**0.0265**	**9.0000e-005**		**2.0600e-003**	**2.0600e-003**		**1.8900e-003**	**1.8900e-003**	**0.0000**	**7.7498**	**7.7498**	**2.5100e-003**	**0.0000**	**7.8024**

Unmitigated Construction Off-Site

	ROG	NOx	CO	SO2	Fugitive PM10	Exhaust PM10	PM10 Total	Fugitive PM2.5	Exhaust PM2.5	PM2.5 Total	Bio- CO2	NBio- CO2	Total CO2	CH4	N2O	CO2e
Category	tons/yr										MT/yr					
Hauling	0.0000	0.0000	0.0000	0.0000	0.0000	0.0000	0.0000	0.0000	0.0000	0.0000	0.0000	0.0000	0.0000	0.0000	0.0000	0.0000
Vendor	0.0000	0.0000	0.0000	0.0000	0.0000	0.0000	0.0000	0.0000	0.0000	0.0000	0.0000	0.0000	0.0000	0.0000	0.0000	0.0000
Worker	0.0000	0.0000	0.0000	0.0000	0.0000	0.0000	0.0000	0.0000	0.0000	0.0000	0.0000	0.0000	0.0000	0.0000	0.0000	0.0000
Total	**0.0000**	**0.0000**	**0.0000**	**0.0000**	**0.0000**	**0.0000**	**0.0000**	**0.0000**	**0.0000**	**0.0000**	**0.0000**	**0.0000**	**0.0000**	**0.0000**	**0.0000**	**0.0000**

3.53 Year 9 Month 4 - 2028

Mitigated Construction On-Site

	ROG	NOx	CO	SO2	Fugitive PM10	Exhaust PM10	PM10 Total	Fugitive PM2.5	Exhaust PM2.5	PM2.5 Total	Bio- CO2	NBio- CO2	Total CO2	CH4	N2O	CO2e
Category	tons/yr										MT/yr					
Off-Road	1.0800e-003	4.7000e-003	0.0397	9.0000e-005		1.4000e-004	1.4000e-004		1.4000e-004	1.4000e-004	0.0000	7.7498	7.7498	2.5100e-003	0.0000	7.8024
Total	**1.0800e-003**	**4.7000e-003**	**0.0397**	**9.0000e-005**		**1.4000e-004**	**1.4000e-004**		**1.4000e-004**	**1.4000e-004**	**0.0000**	**7.7498**	**7.7498**	**2.5100e-003**	**0.0000**	**7.8024**

Mitigated Construction Off-Site

	ROG	NOx	CO	SO2	Fugitive PM10	Exhaust PM10	PM10 Total	Fugitive PM2.5	Exhaust PM2.5	PM2.5 Total	Bio- CO2	NBio- CO2	Total CO2	CH4	N2O	CO2e
Category	tons/yr										MT/yr					
Hauling	0.0000	0.0000	0.0000	0.0000	0.0000	0.0000	0.0000	0.0000	0.0000	0.0000	0.0000	0.0000	0.0000	0.0000	0.0000	0.0000
Vendor	0.0000	0.0000	0.0000	0.0000	0.0000	0.0000	0.0000	0.0000	0.0000	0.0000	0.0000	0.0000	0.0000	0.0000	0.0000	0.0000
Worker	0.0000	0.0000	0.0000	0.0000	0.0000	0.0000	0.0000	0.0000	0.0000	0.0000	0.0000	0.0000	0.0000	0.0000	0.0000	0.0000
Total	**0.0000**	**0.0000**	**0.0000**	**0.0000**	**0.0000**	**0.0000**	**0.0000**	**0.0000**	**0.0000**	**0.0000**	**0.0000**	**0.0000**	**0.0000**	**0.0000**	**0.0000**	**0.0000**

3.54 Year 9 Month 5 - 2028

Unmitigated Construction On-Site

	ROG	NOx	CO	SO2	Fugitive PM10	Exhaust PM10	PM10 Total	Fugitive PM2.5	Exhaust PM2.5	PM2.5 Total	Bio- CO2	NBio- CO2	Total CO2	CH4	N2O	CO2e
Category	tons/yr										MT/yr					
Off-Road	5.1600e-003	0.0523	0.0287	1.0000e-004		2.2200e-003	2.2200e-003		2.0500e-003	2.0500e-003	0.0000	8.3698	8.3698	2.7100e-003	0.0000	8.4266
Total	**5.1600e-003**	**0.0523**	**0.0287**	**1.0000e-004**		**2.2200e-003**	**2.2200e-003**		**2.0500e-003**	**2.0500e-003**	**0.0000**	**8.3698**	**8.3698**	**2.7100e-003**	**0.0000**	**8.4266**

Unmitigated Construction Off-Site

	ROG	NOx	CO	SO2	Fugitive PM10	Exhaust PM10	PM10 Total	Fugitive PM2.5	Exhaust PM2.5	PM2.5 Total	Bio- CO2	NBio- CO2	Total CO2	CH4	N2O	CO2e
Category	tons/yr										MT/yr					
Hauling	0.0000	0.0000	0.0000	0.0000	0.0000	0.0000	0.0000	0.0000	0.0000	0.0000	0.0000	0.0000	0.0000	0.0000	0.0000	0.0000
Vendor	0.0000	0.0000	0.0000	0.0000	0.0000	0.0000	0.0000	0.0000	0.0000	0.0000	0.0000	0.0000	0.0000	0.0000	0.0000	0.0000
Worker	0.0000	0.0000	0.0000	0.0000	0.0000	0.0000	0.0000	0.0000	0.0000	0.0000	0.0000	0.0000	0.0000	0.0000	0.0000	0.0000
Total	**0.0000**	**0.0000**	**0.0000**	**0.0000**	**0.0000**	**0.0000**	**0.0000**	**0.0000**	**0.0000**	**0.0000**	**0.0000**	**0.0000**	**0.0000**	**0.0000**	**0.0000**	**0.0000**

3.54 Year 9 Month 5 - 2028

Mitigated Construction On-Site

	ROG	NOx	CO	SO2	Fugitive PM10	Exhaust PM10	PM10 Total	Fugitive PM2.5	Exhaust PM2.5	PM2.5 Total	Bio- CO2	NBio- CO2	Total CO2	CH4	N2O	CO2e
Category	tons/yr										MT/yr					
Off-Road	1.1700e-003	5.0700e-003	0.0429	1.0000e-004		1.6000e-004	1.6000e-004		1.6000e-004	1.6000e-004	0.0000	8.3698	8.3698	2.7100e-003	0.0000	8.4266
Total	**1.1700e-003**	**5.0700e-003**	**0.0429**	**1.0000e-004**		**1.6000e-004**	**1.6000e-004**		**1.6000e-004**	**1.6000e-004**	**0.0000**	**8.3698**	**8.3698**	**2.7100e-003**	**0.0000**	**8.4266**

Mitigated Construction Off-Site

	ROG	NOx	CO	SO2	Fugitive PM10	Exhaust PM10	PM10 Total	Fugitive PM2.5	Exhaust PM2.5	PM2.5 Total	Bio- CO2	NBio- CO2	Total CO2	CH4	N2O	CO2e
Category	tons/yr										MT/yr					
Hauling	0.0000	0.0000	0.0000	0.0000	0.0000	0.0000	0.0000	0.0000	0.0000	0.0000	0.0000	0.0000	0.0000	0.0000	0.0000	0.0000
Vendor	0.0000	0.0000	0.0000	0.0000	0.0000	0.0000	0.0000	0.0000	0.0000	0.0000	0.0000	0.0000	0.0000	0.0000	0.0000	0.0000
Worker	0.0000	0.0000	0.0000	0.0000	0.0000	0.0000	0.0000	0.0000	0.0000	0.0000	0.0000	0.0000	0.0000	0.0000	0.0000	0.0000
Total	**0.0000**	**0.0000**	**0.0000**	**0.0000**	**0.0000**	**0.0000**	**0.0000**	**0.0000**	**0.0000**	**0.0000**	**0.0000**	**0.0000**	**0.0000**	**0.0000**	**0.0000**	**0.0000**

3.55 Year 9 Month 6 - 2028

Unmitigated Construction Off-Site

	ROG	NOx	CO	SO2	Fugitive PM10	Exhaust PM10	PM10 Total	Fugitive PM2.5	Exhaust PM2.5	PM2.5 Total	Bio- CO2	NBio- CO2	Total CO2	CH4	N2O	CO2e
Category	tons/yr										MT/yr					
Hauling					0.0000	0.0000	0.0000	0.0000	0.0000	0.0000	0.0000	0.0000	0.0000	0.0000	0.0000	0.0000
Vendor					0.0000	0.0000	0.0000	0.0000	0.0000	0.0000	0.0000	0.0000	0.0000	0.0000	0.0000	0.0000
Worker					0.0000	0.0000	0.0000	0.0000	0.0000	0.0000	0.0000	0.0000	0.0000	0.0000	0.0000	0.0000
Total					**0.0000**	**0.0000**	**0.0000**	**0.0000**	**0.0000**	**0.0000**	**0.0000**	**0.0000**	**0.0000**	**0.0000**	**0.0000**	**0.0000**

Mitigated Construction Off-Site

	ROG	NOx	CO	SO2	Fugitive PM10	Exhaust PM10	PM10 Total	Fugitive PM2.5	Exhaust PM2.5	PM2.5 Total	Bio- CO2	NBio- CO2	Total CO2	CH4	N2O	CO2e
Category	tons/yr										MT/yr					
Hauling					0.0000	0.0000	0.0000	0.0000	0.0000	0.0000	0.0000	0.0000	0.0000	0.0000	0.0000	0.0000
Vendor					0.0000	0.0000	0.0000	0.0000	0.0000	0.0000	0.0000	0.0000	0.0000	0.0000	0.0000	0.0000
Worker					0.0000	0.0000	0.0000	0.0000	0.0000	0.0000	0.0000	0.0000	0.0000	0.0000	0.0000	0.0000
Total					**0.0000**	**0.0000**	**0.0000**	**0.0000**	**0.0000**	**0.0000**	**0.0000**	**0.0000**	**0.0000**	**0.0000**	**0.0000**	**0.0000**

3.56 Year 9 Month 7 - 2028

Unmitigated Construction Off-Site

	ROG	NOx	CO	SO2	Fugitive PM10	Exhaust PM10	PM10 Total	Fugitive PM2.5	Exhaust PM2.5	PM2.5 Total	Bio- CO2	NBio- CO2	Total CO2	CH4	N2O	CO2e
Category	tons/yr										MT/yr					
Hauling					0.0000	0.0000	0.0000	0.0000	0.0000	0.0000	0.0000	0.0000	0.0000	0.0000	0.0000	0.0000
Vendor					0.0000	0.0000	0.0000	0.0000	0.0000	0.0000	0.0000	0.0000	0.0000	0.0000	0.0000	0.0000
Worker					0.0000	0.0000	0.0000	0.0000	0.0000	0.0000	0.0000	0.0000	0.0000	0.0000	0.0000	0.0000
Total					**0.0000**	**0.0000**	**0.0000**	**0.0000**	**0.0000**	**0.0000**	**0.0000**	**0.0000**	**0.0000**	**0.0000**	**0.0000**	**0.0000**

Mitigated Construction Off-Site

	ROG	NOx	CO	SO2	Fugitive PM10	Exhaust PM10	PM10 Total	Fugitive PM2.5	Exhaust PM2.5	PM2.5 Total	Bio- CO2	NBio- CO2	Total CO2	CH4	N2O	CO2e
Category	tons/yr										MT/yr					
Hauling					0.0000	0.0000	0.0000	0.0000	0.0000	0.0000	0.0000	0.0000	0.0000	0.0000	0.0000	0.0000
Vendor					0.0000	0.0000	0.0000	0.0000	0.0000	0.0000	0.0000	0.0000	0.0000	0.0000	0.0000	0.0000
Worker					0.0000	0.0000	0.0000	0.0000	0.0000	0.0000	0.0000	0.0000	0.0000	0.0000	0.0000	0.0000
Total					**0.0000**	**0.0000**	**0.0000**	**0.0000**	**0.0000**	**0.0000**	**0.0000**	**0.0000**	**0.0000**	**0.0000**	**0.0000**	**0.0000**

3.57 Year 9 Month 8 - 2028

Unmitigated Construction On-Site

	ROG	NOx	CO	SO2	Fugitive PM10	Exhaust PM10	PM10 Total	Fugitive PM2.5	Exhaust PM2.5	PM2.5 Total	Bio- CO2	NBio- CO2	Total CO2	CH4	N2O	CO2e
Category	tons/yr										MT/yr					
Off-Road	0.0713	0.6942	0.4867	1.6300e-003		0.0277	0.0277		0.0254	0.0254	0.0000	143.5654	143.5654	0.0464	0.0000	144.5405
Total	**0.0713**	**0.6942**	**0.4867**	**1.6300e-003**		**0.0277**	**0.0277**		**0.0254**	**0.0254**	**0.0000**	**143.5654**	**143.5654**	**0.0464**	**0.0000**	**144.5405**

Unmitigated Construction Off-Site

	ROG	NOx	CO	SO2	Fugitive PM10	Exhaust PM10	PM10 Total	Fugitive PM2.5	Exhaust PM2.5	PM2.5 Total	Bio- CO2	NBio- CO2	Total CO2	CH4	N2O	CO2e
Category	tons/yr										MT/yr					
Hauling	0.0000	0.0000	0.0000	0.0000	0.0000	0.0000	0.0000	0.0000	0.0000	0.0000	0.0000	0.0000	0.0000	0.0000	0.0000	0.0000
Vendor	0.0000	0.0000	0.0000	0.0000	0.0000	0.0000	0.0000	0.0000	0.0000	0.0000	0.0000	0.0000	0.0000	0.0000	0.0000	0.0000
Worker	0.0000	0.0000	0.0000	0.0000	0.0000	0.0000	0.0000	0.0000	0.0000	0.0000	0.0000	0.0000	0.0000	0.0000	0.0000	0.0000
Total	**0.0000**	**0.0000**	**0.0000**	**0.0000**	**0.0000**	**0.0000**	**0.0000**	**0.0000**	**0.0000**	**0.0000**	**0.0000**	**0.0000**	**0.0000**	**0.0000**	**0.0000**	**0.0000**

3.57 Year 9 Month 8 - 2028

Mitigated Construction On-Site

	ROG	NOx	CO	SO2	Fugitive PM10	Exhaust PM10	PM10 Total	Fugitive PM2.5	Exhaust PM2.5	PM2.5 Total	Bio- CO2	NBio- CO2	Total CO2	CH4	N2O	CO2e
Category	tons/yr										MT/yr					
Off-Road	0.0201	0.0871	0.7860	1.6300e-003		2.6800e-003	2.6800e-003		2.6800e-003	2.6800e-003	0.0000	143.5652	143.5652	0.0464	0.0000	144.5403
Total	**0.0201**	**0.0871**	**0.7860**	**1.6300e-003**		**2.6800e-003**	**2.6800e-003**		**2.6800e-003**	**2.6800e-003**	**0.0000**	**143.5652**	**143.5652**	**0.0464**	**0.0000**	**144.5403**

Mitigated Construction Off-Site

	ROG	NOx	CO	SO2	Fugitive PM10	Exhaust PM10	PM10 Total	Fugitive PM2.5	Exhaust PM2.5	PM2.5 Total	Bio- CO2	NBio- CO2	Total CO2	CH4	N2O	CO2e
Category	tons/yr										MT/yr					
Hauling	0.0000	0.0000	0.0000	0.0000	0.0000	0.0000	0.0000	0.0000	0.0000	0.0000	0.0000	0.0000	0.0000	0.0000	0.0000	0.0000
Vendor	0.0000	0.0000	0.0000	0.0000	0.0000	0.0000	0.0000	0.0000	0.0000	0.0000	0.0000	0.0000	0.0000	0.0000	0.0000	0.0000
Worker	0.0000	0.0000	0.0000	0.0000	0.0000	0.0000	0.0000	0.0000	0.0000	0.0000	0.0000	0.0000	0.0000	0.0000	0.0000	0.0000
Total	**0.0000**	**0.0000**	**0.0000**	**0.0000**	**0.0000**	**0.0000**	**0.0000**	**0.0000**	**0.0000**	**0.0000**	**0.0000**	**0.0000**	**0.0000**	**0.0000**	**0.0000**	**0.0000**

3.58 Year 9 Month 9 - 2028

Unmitigated Construction On-Site

	ROG	NOx	CO	SO2	Fugitive PM10	Exhaust PM10	PM10 Total	Fugitive PM2.5	Exhaust PM2.5	PM2.5 Total	Bio- CO2	NBio- CO2	Total CO2	CH4	N2O	CO2e
Category	tons/yr										MT/yr					
Off-Road	0.0687	0.6685	0.4686	1.5700e-003		0.0266	0.0266		0.0245	0.0245	0.0000	138.2482	138.2482	0.0447	0.0000	139.1871
Total	**0.0687**	**0.6685**	**0.4686**	**1.5700e-003**		**0.0266**	**0.0266**		**0.0245**	**0.0245**	**0.0000**	**138.2482**	**138.2482**	**0.0447**	**0.0000**	**139.1871**

Unmitigated Construction Off-Site

	ROG	NOx	CO	SO2	Fugitive PM10	Exhaust PM10	PM10 Total	Fugitive PM2.5	Exhaust PM2.5	PM2.5 Total	Bio- CO2	NBio- CO2	Total CO2	CH4	N2O	CO2e
Category	tons/yr										MT/yr					
Hauling	0.0000	0.0000	0.0000	0.0000	0.0000	0.0000	0.0000	0.0000	0.0000	0.0000	0.0000	0.0000	0.0000	0.0000	0.0000	0.0000
Vendor	0.0000	0.0000	0.0000	0.0000	0.0000	0.0000	0.0000	0.0000	0.0000	0.0000	0.0000	0.0000	0.0000	0.0000	0.0000	0.0000
Worker	0.0000	0.0000	0.0000	0.0000	0.0000	0.0000	0.0000	0.0000	0.0000	0.0000	0.0000	0.0000	0.0000	0.0000	0.0000	0.0000
Total	**0.0000**	**0.0000**	**0.0000**	**0.0000**	**0.0000**	**0.0000**	**0.0000**	**0.0000**	**0.0000**	**0.0000**	**0.0000**	**0.0000**	**0.0000**	**0.0000**	**0.0000**	**0.0000**

3.58 Year 9 Month 9 - 2028

Mitigated Construction On-Site

	ROG	NOx	CO	SO2	Fugitive PM10	Exhaust PM10	PM10 Total	Fugitive PM2.5	Exhaust PM2.5	PM2.5 Total	Bio- CO2	NBio- CO2	Total CO2	CH4	N2O	CO2e
Category	tons/yr										MT/yr					
Off-Road	0.0194	0.0839	0.7569	1.5700e-003		2.5800e-003	2.5800e-003		2.5800e-003	2.5800e-003	0.0000	138.2480	138.2480	0.0447	0.0000	139.1870
Total	**0.0194**	**0.0839**	**0.7569**	**1.5700e-003**		**2.5800e-003**	**2.5800e-003**		**2.5800e-003**	**2.5800e-003**	**0.0000**	**138.2480**	**138.2480**	**0.0447**	**0.0000**	**139.1870**

Mitigated Construction Off-Site

	ROG	NOx	CO	SO2	Fugitive PM10	Exhaust PM10	PM10 Total	Fugitive PM2.5	Exhaust PM2.5	PM2.5 Total	Bio- CO2	NBio- CO2	Total CO2	CH4	N2O	CO2e
Category	tons/yr										MT/yr					
Hauling	0.0000	0.0000	0.0000	0.0000	0.0000	0.0000	0.0000	0.0000	0.0000	0.0000	0.0000	0.0000	0.0000	0.0000	0.0000	0.0000
Vendor	0.0000	0.0000	0.0000	0.0000	0.0000	0.0000	0.0000	0.0000	0.0000	0.0000	0.0000	0.0000	0.0000	0.0000	0.0000	0.0000
Worker	0.0000	0.0000	0.0000	0.0000	0.0000	0.0000	0.0000	0.0000	0.0000	0.0000	0.0000	0.0000	0.0000	0.0000	0.0000	0.0000
Total	**0.0000**	**0.0000**	**0.0000**	**0.0000**	**0.0000**	**0.0000**	**0.0000**	**0.0000**	**0.0000**	**0.0000**	**0.0000**	**0.0000**	**0.0000**	**0.0000**	**0.0000**	**0.0000**

3.59 Year 9 Month 10 - 2028

Unmitigated Construction On-Site

	ROG	NOx	CO	SO2	Fugitive PM10	Exhaust PM10	PM10 Total	Fugitive PM2.5	Exhaust PM2.5	PM2.5 Total	Bio- CO2	NBio- CO2	Total CO2	CH4	N2O	CO2e
Category	tons/yr										MT/yr					
Off-Road	0.0687	0.6685	0.4686	1.5700e-003		0.0266	0.0266		0.0245	0.0245	0.0000	138.2482	138.2482	0.0447	0.0000	139.1871
Total	**0.0687**	**0.6685**	**0.4686**	**1.5700e-003**		**0.0266**	**0.0266**		**0.0245**	**0.0245**	**0.0000**	**138.2482**	**138.2482**	**0.0447**	**0.0000**	**139.1871**

Unmitigated Construction Off-Site

	ROG	NOx	CO	SO2	Fugitive PM10	Exhaust PM10	PM10 Total	Fugitive PM2.5	Exhaust PM2.5	PM2.5 Total	Bio- CO2	NBio- CO2	Total CO2	CH4	N2O	CO2e
Category	tons/yr										MT/yr					
Hauling	0.0000	0.0000	0.0000	0.0000	0.0000	0.0000	0.0000	0.0000	0.0000	0.0000	0.0000	0.0000	0.0000	0.0000	0.0000	0.0000
Vendor	0.0000	0.0000	0.0000	0.0000	0.0000	0.0000	0.0000	0.0000	0.0000	0.0000	0.0000	0.0000	0.0000	0.0000	0.0000	0.0000
Worker	0.0000	0.0000	0.0000	0.0000	0.0000	0.0000	0.0000	0.0000	0.0000	0.0000	0.0000	0.0000	0.0000	0.0000	0.0000	0.0000
Total	**0.0000**	**0.0000**	**0.0000**	**0.0000**	**0.0000**	**0.0000**	**0.0000**	**0.0000**	**0.0000**	**0.0000**	**0.0000**	**0.0000**	**0.0000**	**0.0000**	**0.0000**	**0.0000**

3.59 Year 9 Month 10 - 2028

Mitigated Construction On-Site

	ROG	NOx	CO	SO2	Fugitive PM10	Exhaust PM10	PM10 Total	Fugitive PM2.5	Exhaust PM2.5	PM2.5 Total	Bio- CO2	NBio- CO2	Total CO2	CH4	N2O	CO2e
Category	tons/yr										MT/yr					
Off-Road	0.0194	0.0839	0.7569	1.5700e-003		2.5800e-003	2.5800e-003		2.5800e-003	2.5800e-003	0.0000	138.2480	138.2480	0.0447	0.0000	139.1870
Total	**0.0194**	**0.0839**	**0.7569**	**1.5700e-003**		**2.5800e-003**	**2.5800e-003**		**2.5800e-003**	**2.5800e-003**	**0.0000**	**138.2480**	**138.2480**	**0.0447**	**0.0000**	**139.1870**

Mitigated Construction Off-Site

	ROG	NOx	CO	SO2	Fugitive PM10	Exhaust PM10	PM10 Total	Fugitive PM2.5	Exhaust PM2.5	PM2.5 Total	Bio- CO2	NBio- CO2	Total CO2	CH4	N2O	CO2e
Category	tons/yr										MT/yr					
Hauling	0.0000	0.0000	0.0000	0.0000	0.0000	0.0000	0.0000	0.0000	0.0000	0.0000	0.0000	0.0000	0.0000	0.0000	0.0000	0.0000
Vendor	0.0000	0.0000	0.0000	0.0000	0.0000	0.0000	0.0000	0.0000	0.0000	0.0000	0.0000	0.0000	0.0000	0.0000	0.0000	0.0000
Worker	0.0000	0.0000	0.0000	0.0000	0.0000	0.0000	0.0000	0.0000	0.0000	0.0000	0.0000	0.0000	0.0000	0.0000	0.0000	0.0000
Total	**0.0000**	**0.0000**	**0.0000**	**0.0000**	**0.0000**	**0.0000**	**0.0000**	**0.0000**	**0.0000**	**0.0000**	**0.0000**	**0.0000**	**0.0000**	**0.0000**	**0.0000**	**0.0000**

3.60 Year 9 Month 11 - 2028

Unmitigated Construction Off-Site

	ROG	NOx	CO	SO2	Fugitive PM10	Exhaust PM10	PM10 Total	Fugitive PM2.5	Exhaust PM2.5	PM2.5 Total	Bio- CO2	NBio- CO2	Total CO2	CH4	N2O	CO2e
Category	tons/yr										MT/yr					
Hauling					0.0000	0.0000	0.0000	0.0000	0.0000	0.0000	0.0000	0.0000	0.0000	0.0000	0.0000	0.0000
Vendor					0.0000	0.0000	0.0000	0.0000	0.0000	0.0000	0.0000	0.0000	0.0000	0.0000	0.0000	0.0000
Worker					0.0000	0.0000	0.0000	0.0000	0.0000	0.0000	0.0000	0.0000	0.0000	0.0000	0.0000	0.0000
Total					**0.0000**	**0.0000**	**0.0000**	**0.0000**	**0.0000**	**0.0000**	**0.0000**	**0.0000**	**0.0000**	**0.0000**	**0.0000**	**0.0000**

Mitigated Construction Off-Site

	ROG	NOx	CO	SO2	Fugitive PM10	Exhaust PM10	PM10 Total	Fugitive PM2.5	Exhaust PM2.5	PM2.5 Total	Bio- CO2	NBio- CO2	Total CO2	CH4	N2O	CO2e
Category	tons/yr										MT/yr					
Hauling					0.0000	0.0000	0.0000	0.0000	0.0000	0.0000	0.0000	0.0000	0.0000	0.0000	0.0000	0.0000
Vendor					0.0000	0.0000	0.0000	0.0000	0.0000	0.0000	0.0000	0.0000	0.0000	0.0000	0.0000	0.0000
Worker					0.0000	0.0000	0.0000	0.0000	0.0000	0.0000	0.0000	0.0000	0.0000	0.0000	0.0000	0.0000
Total					**0.0000**	**0.0000**	**0.0000**	**0.0000**	**0.0000**	**0.0000**	**0.0000**	**0.0000**	**0.0000**	**0.0000**	**0.0000**	**0.0000**

3.61 Year 9 Month 12 - 2028

Unmitigated Construction Off-Site

	ROG	NOx	CO	SO2	Fugitive PM10	Exhaust PM10	PM10 Total	Fugitive PM2.5	Exhaust PM2.5	PM2.5 Total	Bio- CO2	NBio- CO2	Total CO2	CH4	N2O	CO2e
Category	tons/yr										MT/yr					
Hauling					0.0000	0.0000	0.0000	0.0000	0.0000	0.0000	0.0000	0.0000	0.0000	0.0000	0.0000	0.0000
Vendor					0.0000	0.0000	0.0000	0.0000	0.0000	0.0000	0.0000	0.0000	0.0000	0.0000	0.0000	0.0000
Worker					0.0000	0.0000	0.0000	0.0000	0.0000	0.0000	0.0000	0.0000	0.0000	0.0000	0.0000	0.0000
Total					**0.0000**	**0.0000**	**0.0000**	**0.0000**	**0.0000**	**0.0000**	**0.0000**	**0.0000**	**0.0000**	**0.0000**	**0.0000**	**0.0000**

Mitigated Construction Off-Site

	ROG	NOx	CO	SO2	Fugitive PM10	Exhaust PM10	PM10 Total	Fugitive PM2.5	Exhaust PM2.5	PM2.5 Total	Bio- CO2	NBio- CO2	Total CO2	CH4	N2O	CO2e
Category	tons/yr										MT/yr					
Hauling					0.0000	0.0000	0.0000	0.0000	0.0000	0.0000	0.0000	0.0000	0.0000	0.0000	0.0000	0.0000
Vendor					0.0000	0.0000	0.0000	0.0000	0.0000	0.0000	0.0000	0.0000	0.0000	0.0000	0.0000	0.0000
Worker					0.0000	0.0000	0.0000	0.0000	0.0000	0.0000	0.0000	0.0000	0.0000	0.0000	0.0000	0.0000
Total					**0.0000**	**0.0000**	**0.0000**	**0.0000**	**0.0000**	**0.0000**	**0.0000**	**0.0000**	**0.0000**	**0.0000**	**0.0000**	**0.0000**

3.62 Year 10 Month 1 - 2029

Unmitigated Construction On-Site

	ROG	NOx	CO	SO2	Fugitive PM10	Exhaust PM10	PM10 Total	Fugitive PM2.5	Exhaust PM2.5	PM2.5 Total	Bio- CO2	NBio- CO2	Total CO2	CH4	N2O	CO2e
Category	tons/yr										MT/yr					
Off-Road	0.0107	0.1004	0.0951	2.3000e-004		4.2900e-003	4.2900e-003		3.9500e-003	3.9500e-003	0.0000	20.0198	20.0198	6.4700e-003	0.0000	20.1558
Total	**0.0107**	**0.1004**	**0.0951**	**2.3000e-004**		**4.2900e-003**	**4.2900e-003**		**3.9500e-003**	**3.9500e-003**	**0.0000**	**20.0198**	**20.0198**	**6.4700e-003**	**0.0000**	**20.1558**

Unmitigated Construction Off-Site

	ROG	NOx	CO	SO2	Fugitive PM10	Exhaust PM10	PM10 Total	Fugitive PM2.5	Exhaust PM2.5	PM2.5 Total	Bio- CO2	NBio- CO2	Total CO2	CH4	N2O	CO2e
Category	tons/yr										MT/yr					
Hauling	0.0000	0.0000	0.0000	0.0000	0.0000	0.0000	0.0000	0.0000	0.0000	0.0000	0.0000	0.0000	0.0000	0.0000	0.0000	0.0000
Vendor	0.0000	0.0000	0.0000	0.0000	0.0000	0.0000	0.0000	0.0000	0.0000	0.0000	0.0000	0.0000	0.0000	0.0000	0.0000	0.0000
Worker	0.0000	0.0000	0.0000	0.0000	0.0000	0.0000	0.0000	0.0000	0.0000	0.0000	0.0000	0.0000	0.0000	0.0000	0.0000	0.0000
Total	**0.0000**	**0.0000**	**0.0000**	**0.0000**	**0.0000**	**0.0000**	**0.0000**	**0.0000**	**0.0000**	**0.0000**	**0.0000**	**0.0000**	**0.0000**	**0.0000**	**0.0000**	**0.0000**

3.62 Year 10 Month 1 - 2029

Mitigated Construction On-Site

	ROG	NOx	CO	SO2	Fugitive PM10	Exhaust PM10	PM10 Total	Fugitive PM2.5	Exhaust PM2.5	PM2.5 Total	Bio- CO2	NBio- CO2	Total CO2	CH4	N2O	CO2e
Category	tons/yr										MT/yr					
Off-Road	2.8100e-003	0.0122	0.1288	2.3000e-004		3.7000e-004	3.7000e-004		3.7000e-004	3.7000e-004	0.0000	20.0198	20.0198	6.4700e-003	0.0000	20.1558
Total	**2.8100e-003**	**0.0122**	**0.1288**	**2.3000e-004**		**3.7000e-004**	**3.7000e-004**		**3.7000e-004**	**3.7000e-004**	**0.0000**	**20.0198**	**20.0198**	**6.4700e-003**	**0.0000**	**20.1558**

Mitigated Construction Off-Site

	ROG	NOx	CO	SO2	Fugitive PM10	Exhaust PM10	PM10 Total	Fugitive PM2.5	Exhaust PM2.5	PM2.5 Total	Bio- CO2	NBio- CO2	Total CO2	CH4	N2O	CO2e
Category	tons/yr										MT/yr					
Hauling	0.0000	0.0000	0.0000	0.0000	0.0000	0.0000	0.0000	0.0000	0.0000	0.0000	0.0000	0.0000	0.0000	0.0000	0.0000	0.0000
Vendor	0.0000	0.0000	0.0000	0.0000	0.0000	0.0000	0.0000	0.0000	0.0000	0.0000	0.0000	0.0000	0.0000	0.0000	0.0000	0.0000
Worker	0.0000	0.0000	0.0000	0.0000	0.0000	0.0000	0.0000	0.0000	0.0000	0.0000	0.0000	0.0000	0.0000	0.0000	0.0000	0.0000
Total	**0.0000**	**0.0000**	**0.0000**	**0.0000**	**0.0000**	**0.0000**	**0.0000**	**0.0000**	**0.0000**	**0.0000**	**0.0000**	**0.0000**	**0.0000**	**0.0000**	**0.0000**	**0.0000**

3.63 Year 10 Month 2 - 2029

Unmitigated Construction On-Site

	ROG	NOx	CO	SO2	Fugitive PM10	Exhaust PM10	PM10 Total	Fugitive PM2.5	Exhaust PM2.5	PM2.5 Total	Bio- CO2	NBio- CO2	Total CO2	CH4	N2O	CO2e
Category	tons/yr										MT/yr					
Off-Road	7.6000e-003	0.0649	0.0481	1.2000e-004		2.5400e-003	2.5400e-003		2.3800e-003	2.3800e-003	0.0000	10.0176	10.0176	2.6500e-003	0.0000	10.0733
Total	**7.6000e-003**	**0.0649**	**0.0481**	**1.2000e-004**		**2.5400e-003**	**2.5400e-003**		**2.3800e-003**	**2.3800e-003**	**0.0000**	**10.0176**	**10.0176**	**2.6500e-003**	**0.0000**	**10.0733**

Unmitigated Construction Off-Site

	ROG	NOx	CO	SO2	Fugitive PM10	Exhaust PM10	PM10 Total	Fugitive PM2.5	Exhaust PM2.5	PM2.5 Total	Bio- CO2	NBio- CO2	Total CO2	CH4	N2O	CO2e
Category	tons/yr										MT/yr					
Hauling	0.0000	0.0000	0.0000	0.0000	0.0000	0.0000	0.0000	0.0000	0.0000	0.0000	0.0000	0.0000	0.0000	0.0000	0.0000	0.0000
Vendor	0.0000	0.0000	0.0000	0.0000	0.0000	0.0000	0.0000	0.0000	0.0000	0.0000	0.0000	0.0000	0.0000	0.0000	0.0000	0.0000
Worker	0.0000	0.0000	0.0000	0.0000	0.0000	0.0000	0.0000	0.0000	0.0000	0.0000	0.0000	0.0000	0.0000	0.0000	0.0000	0.0000
Total	**0.0000**	**0.0000**	**0.0000**	**0.0000**	**0.0000**	**0.0000**	**0.0000**	**0.0000**	**0.0000**	**0.0000**	**0.0000**	**0.0000**	**0.0000**	**0.0000**	**0.0000**	**0.0000**

3.63 Year 10 Month 2 - 2029

Mitigated Construction On-Site

	ROG	NOx	CO	SO2	Fugitive PM10	Exhaust PM10	PM10 Total	Fugitive PM2.5	Exhaust PM2.5	PM2.5 Total	Bio- CO2	NBio- CO2	Total CO2	CH4	N2O	CO2e
Category	tons/yr										MT/yr					
Off-Road	1.6400e-003	0.0183	0.0587	1.2000e-004		1.8000e-004	1.8000e-004		1.8000e-004	1.8000e-004	0.0000	10.0176	10.0176	2.6500e-003	0.0000	10.0733
Total	**1.6400e-003**	**0.0183**	**0.0587**	**1.2000e-004**		**1.8000e-004**	**1.8000e-004**		**1.8000e-004**	**1.8000e-004**	**0.0000**	**10.0176**	**10.0176**	**2.6500e-003**	**0.0000**	**10.0733**

Mitigated Construction Off-Site

	ROG	NOx	CO	SO2	Fugitive PM10	Exhaust PM10	PM10 Total	Fugitive PM2.5	Exhaust PM2.5	PM2.5 Total	Bio- CO2	NBio- CO2	Total CO2	CH4	N2O	CO2e
Category	tons/yr										MT/yr					
Hauling	0.0000	0.0000	0.0000	0.0000	0.0000	0.0000	0.0000	0.0000	0.0000	0.0000	0.0000	0.0000	0.0000	0.0000	0.0000	0.0000
Vendor	0.0000	0.0000	0.0000	0.0000	0.0000	0.0000	0.0000	0.0000	0.0000	0.0000	0.0000	0.0000	0.0000	0.0000	0.0000	0.0000
Worker	0.0000	0.0000	0.0000	0.0000	0.0000	0.0000	0.0000	0.0000	0.0000	0.0000	0.0000	0.0000	0.0000	0.0000	0.0000	0.0000
Total	**0.0000**	**0.0000**	**0.0000**	**0.0000**	**0.0000**	**0.0000**	**0.0000**	**0.0000**	**0.0000**	**0.0000**	**0.0000**	**0.0000**	**0.0000**	**0.0000**	**0.0000**	**0.0000**

3.64 Year 10 Month 3 - 2029

Unmitigated Construction On-Site

	ROG	NOx	CO	SO2	Fugitive PM10	Exhaust PM10	PM10 Total	Fugitive PM2.5	Exhaust PM2.5	PM2.5 Total	Bio- CO2	NBio- CO2	Total CO2	CH4	N2O	CO2e
Category	tons/yr										MT/yr					
Off-Road	8.5500e-003	0.0730	0.0541	1.3000e-004		2.8500e-003	2.8500e-003		2.6800e-003	2.6800e-003	0.0000	11.2698	11.2698	2.9800e-003	0.0000	11.3324
Total	**8.5500e-003**	**0.0730**	**0.0541**	**1.3000e-004**		**2.8500e-003**	**2.8500e-003**		**2.6800e-003**	**2.6800e-003**	**0.0000**	**11.2698**	**11.2698**	**2.9800e-003**	**0.0000**	**11.3324**

Unmitigated Construction Off-Site

	ROG	NOx	CO	SO2	Fugitive PM10	Exhaust PM10	PM10 Total	Fugitive PM2.5	Exhaust PM2.5	PM2.5 Total	Bio- CO2	NBio- CO2	Total CO2	CH4	N2O	CO2e
Category	tons/yr										MT/yr					
Hauling	0.0000	0.0000	0.0000	0.0000	0.0000	0.0000	0.0000	0.0000	0.0000	0.0000	0.0000	0.0000	0.0000	0.0000	0.0000	0.0000
Vendor	0.0000	0.0000	0.0000	0.0000	0.0000	0.0000	0.0000	0.0000	0.0000	0.0000	0.0000	0.0000	0.0000	0.0000	0.0000	0.0000
Worker	0.0000	0.0000	0.0000	0.0000	0.0000	0.0000	0.0000	0.0000	0.0000	0.0000	0.0000	0.0000	0.0000	0.0000	0.0000	0.0000
Total	**0.0000**	**0.0000**	**0.0000**	**0.0000**	**0.0000**	**0.0000**	**0.0000**	**0.0000**	**0.0000**	**0.0000**	**0.0000**	**0.0000**	**0.0000**	**0.0000**	**0.0000**	**0.0000**

3.64 Year 10 Month 3 - 2029

Mitigated Construction On-Site

	ROG	NOx	CO	SO2	Fugitive PM10	Exhaust PM10	PM10 Total	Fugitive PM2.5	Exhaust PM2.5	PM2.5 Total	Bio- CO2	NBio- CO2	Total CO2	CH4	N2O	CO2e
Category	tons/yr										MT/yr					
Off-Road	1.8500e-003	0.0205	0.0660	1.3000e-004		2.0000e-004	2.0000e-004		2.0000e-004	2.0000e-004	0.0000	11.2698	11.2698	2.9800e-003	0.0000	11.3324
Total	**1.8500e-003**	**0.0205**	**0.0660**	**1.3000e-004**		**2.0000e-004**	**2.0000e-004**		**2.0000e-004**	**2.0000e-004**	**0.0000**	**11.2698**	**11.2698**	**2.9800e-003**	**0.0000**	**11.3324**

Mitigated Construction Off-Site

	ROG	NOx	CO	SO2	Fugitive PM10	Exhaust PM10	PM10 Total	Fugitive PM2.5	Exhaust PM2.5	PM2.5 Total	Bio- CO2	NBio- CO2	Total CO2	CH4	N2O	CO2e
Category	tons/yr										MT/yr					
Hauling	0.0000	0.0000	0.0000	0.0000	0.0000	0.0000	0.0000	0.0000	0.0000	0.0000	0.0000	0.0000	0.0000	0.0000	0.0000	0.0000
Vendor	0.0000	0.0000	0.0000	0.0000	0.0000	0.0000	0.0000	0.0000	0.0000	0.0000	0.0000	0.0000	0.0000	0.0000	0.0000	0.0000
Worker	0.0000	0.0000	0.0000	0.0000	0.0000	0.0000	0.0000	0.0000	0.0000	0.0000	0.0000	0.0000	0.0000	0.0000	0.0000	0.0000
Total	**0.0000**	**0.0000**	**0.0000**	**0.0000**	**0.0000**	**0.0000**	**0.0000**	**0.0000**	**0.0000**	**0.0000**	**0.0000**	**0.0000**	**0.0000**	**0.0000**	**0.0000**	**0.0000**

3.65 Year 10 Month 4 - 2029

Unmitigated Construction On-Site

	ROG	NOx	CO	SO2	Fugitive PM10	Exhaust PM10	PM10 Total	Fugitive PM2.5	Exhaust PM2.5	PM2.5 Total	Bio- CO2	NBio- CO2	Total CO2	CH4	N2O	CO2e
Category	tons/yr										MT/yr					
Off-Road	0.0127	0.1160	0.0767	2.1000e-004		4.7000e-003	4.7000e-003		4.3700e-003	4.3700e-003	0.0000	18.1848	18.1848	5.2700e-003	0.0000	18.2954
Total	**0.0127**	**0.1160**	**0.0767**	**2.1000e-004**		**4.7000e-003**	**4.7000e-003**		**4.3700e-003**	**4.3700e-003**	**0.0000**	**18.1848**	**18.1848**	**5.2700e-003**	**0.0000**	**18.2954**

Unmitigated Construction Off-Site

	ROG	NOx	CO	SO2	Fugitive PM10	Exhaust PM10	PM10 Total	Fugitive PM2.5	Exhaust PM2.5	PM2.5 Total	Bio- CO2	NBio- CO2	Total CO2	CH4	N2O	CO2e
Category	tons/yr										MT/yr					
Hauling	0.0000	0.0000	0.0000	0.0000	0.0000	0.0000	0.0000	0.0000	0.0000	0.0000	0.0000	0.0000	0.0000	0.0000	0.0000	0.0000
Vendor	0.0000	0.0000	0.0000	0.0000	0.0000	0.0000	0.0000	0.0000	0.0000	0.0000	0.0000	0.0000	0.0000	0.0000	0.0000	0.0000
Worker	0.0000	0.0000	0.0000	0.0000	0.0000	0.0000	0.0000	0.0000	0.0000	0.0000	0.0000	0.0000	0.0000	0.0000	0.0000	0.0000
Total	**0.0000**	**0.0000**	**0.0000**	**0.0000**	**0.0000**	**0.0000**	**0.0000**	**0.0000**	**0.0000**	**0.0000**	**0.0000**	**0.0000**	**0.0000**	**0.0000**	**0.0000**	**0.0000**

3.65 Year 10 Month 4 - 2029

Mitigated Construction On-Site

	ROG	NOx	CO	SO2	Fugitive PM10	Exhaust PM10	PM10 Total	Fugitive PM2.5	Exhaust PM2.5	PM2.5 Total	Bio- CO2	NBio- CO2	Total CO2	CH4	N2O	CO2e
Category	tons/yr										MT/yr					
Off-Road	2.7900e-003	0.0237	0.1008	2.1000e-004		3.3000e-004	3.3000e-004		3.3000e-004	3.3000e-004	0.0000	18.1847	18.1847	5.2700e-003	0.0000	18.2954
Total	**2.7900e-003**	**0.0237**	**0.1008**	**2.1000e-004**		**3.3000e-004**	**3.3000e-004**		**3.3000e-004**	**3.3000e-004**	**0.0000**	**18.1847**	**18.1847**	**5.2700e-003**	**0.0000**	**18.2954**

Mitigated Construction Off-Site

	ROG	NOx	CO	SO2	Fugitive PM10	Exhaust PM10	PM10 Total	Fugitive PM2.5	Exhaust PM2.5	PM2.5 Total	Bio- CO2	NBio- CO2	Total CO2	CH4	N2O	CO2e
Category	tons/yr										MT/yr					
Hauling	0.0000	0.0000	0.0000	0.0000	0.0000	0.0000	0.0000	0.0000	0.0000	0.0000	0.0000	0.0000	0.0000	0.0000	0.0000	0.0000
Vendor	0.0000	0.0000	0.0000	0.0000	0.0000	0.0000	0.0000	0.0000	0.0000	0.0000	0.0000	0.0000	0.0000	0.0000	0.0000	0.0000
Worker	0.0000	0.0000	0.0000	0.0000	0.0000	0.0000	0.0000	0.0000	0.0000	0.0000	0.0000	0.0000	0.0000	0.0000	0.0000	0.0000
Total	**0.0000**	**0.0000**	**0.0000**	**0.0000**	**0.0000**	**0.0000**	**0.0000**	**0.0000**	**0.0000**	**0.0000**	**0.0000**	**0.0000**	**0.0000**	**0.0000**	**0.0000**	**0.0000**

3.66 Year 10 Month 5 - 2029

Unmitigated Construction On-Site

	ROG	NOx	CO	SO2	Fugitive PM10	Exhaust PM10	PM10 Total	Fugitive PM2.5	Exhaust PM2.5	PM2.5 Total	Bio- CO2	NBio- CO2	Total CO2	CH4	N2O	CO2e
Category	tons/yr										MT/yr					
Off-Road	0.0137	0.1253	0.0828	2.3000e-004		5.0800e-003	5.0800e-003		4.7200e-003	4.7200e-003	0.0000	19.6395	19.6395	5.6900e-003	0.0000	19.7590
Total	**0.0137**	**0.1253**	**0.0828**	**2.3000e-004**		**5.0800e-003**	**5.0800e-003**		**4.7200e-003**	**4.7200e-003**	**0.0000**	**19.6395**	**19.6395**	**5.6900e-003**	**0.0000**	**19.7590**

Unmitigated Construction Off-Site

	ROG	NOx	CO	SO2	Fugitive PM10	Exhaust PM10	PM10 Total	Fugitive PM2.5	Exhaust PM2.5	PM2.5 Total	Bio- CO2	NBio- CO2	Total CO2	CH4	N2O	CO2e
Category	tons/yr										MT/yr					
Hauling	0.0000	0.0000	0.0000	0.0000	0.0000	0.0000	0.0000	0.0000	0.0000	0.0000	0.0000	0.0000	0.0000	0.0000	0.0000	0.0000
Vendor	0.0000	0.0000	0.0000	0.0000	0.0000	0.0000	0.0000	0.0000	0.0000	0.0000	0.0000	0.0000	0.0000	0.0000	0.0000	0.0000
Worker	0.0000	0.0000	0.0000	0.0000	0.0000	0.0000	0.0000	0.0000	0.0000	0.0000	0.0000	0.0000	0.0000	0.0000	0.0000	0.0000
Total	**0.0000**	**0.0000**	**0.0000**	**0.0000**	**0.0000**	**0.0000**	**0.0000**	**0.0000**	**0.0000**	**0.0000**	**0.0000**	**0.0000**	**0.0000**	**0.0000**	**0.0000**	**0.0000**

3.66 Year 10 Month 5 - 2029

Mitigated Construction On-Site

	ROG	NOx	CO	SO2	Fugitive PM10	Exhaust PM10	PM10 Total	Fugitive PM2.5	Exhaust PM2.5	PM2.5 Total	Bio- CO2	NBio- CO2	Total CO2	CH4	N2O	CO2e
Category	tons/yr										MT/yr					
Off-Road	3.0200e-003	0.0256	0.1089	2.3000e-004		3.6000e-004	3.6000e-004		3.6000e-004	3.6000e-004	0.0000	19.6395	19.6395	5.6900e-003	0.0000	19.7590
Total	**3.0200e-003**	**0.0256**	**0.1089**	**2.3000e-004**		**3.6000e-004**	**3.6000e-004**		**3.6000e-004**	**3.6000e-004**	**0.0000**	**19.6395**	**19.6395**	**5.6900e-003**	**0.0000**	**19.7590**

Mitigated Construction Off-Site

	ROG	NOx	CO	SO2	Fugitive PM10	Exhaust PM10	PM10 Total	Fugitive PM2.5	Exhaust PM2.5	PM2.5 Total	Bio- CO2	NBio- CO2	Total CO2	CH4	N2O	CO2e
Category	tons/yr										MT/yr					
Hauling	0.0000	0.0000	0.0000	0.0000	0.0000	0.0000	0.0000	0.0000	0.0000	0.0000	0.0000	0.0000	0.0000	0.0000	0.0000	0.0000
Vendor	0.0000	0.0000	0.0000	0.0000	0.0000	0.0000	0.0000	0.0000	0.0000	0.0000	0.0000	0.0000	0.0000	0.0000	0.0000	0.0000
Worker	0.0000	0.0000	0.0000	0.0000	0.0000	0.0000	0.0000	0.0000	0.0000	0.0000	0.0000	0.0000	0.0000	0.0000	0.0000	0.0000
Total	**0.0000**	**0.0000**	**0.0000**	**0.0000**	**0.0000**	**0.0000**	**0.0000**	**0.0000**	**0.0000**	**0.0000**	**0.0000**	**0.0000**	**0.0000**	**0.0000**	**0.0000**	**0.0000**

3.67 Year 10 Month 6 - 2029

Unmitigated Construction On-Site

	ROG	NOx	CO	SO2	Fugitive PM10	Exhaust PM10	PM10 Total	Fugitive PM2.5	Exhaust PM2.5	PM2.5 Total	Bio- CO2	NBio- CO2	Total CO2	CH4	N2O	CO2e
Category	tons/yr										MT/yr					
Off-Road	8.2300e-003	0.0703	0.0521	1.3000e-004		2.7500e-003	2.7500e-003		2.5800e-003	2.5800e-003	0.0000	10.8524	10.8524	2.8700e-003	0.0000	10.9127
Total	**8.2300e-003**	**0.0703**	**0.0521**	**1.3000e-004**		**2.7500e-003**	**2.7500e-003**		**2.5800e-003**	**2.5800e-003**	**0.0000**	**10.8524**	**10.8524**	**2.8700e-003**	**0.0000**	**10.9127**

Unmitigated Construction Off-Site

	ROG	NOx	CO	SO2	Fugitive PM10	Exhaust PM10	PM10 Total	Fugitive PM2.5	Exhaust PM2.5	PM2.5 Total	Bio- CO2	NBio- CO2	Total CO2	CH4	N2O	CO2e
Category	tons/yr										MT/yr					
Hauling	0.0000	0.0000	0.0000	0.0000	0.0000	0.0000	0.0000	0.0000	0.0000	0.0000	0.0000	0.0000	0.0000	0.0000	0.0000	0.0000
Vendor	0.0000	0.0000	0.0000	0.0000	0.0000	0.0000	0.0000	0.0000	0.0000	0.0000	0.0000	0.0000	0.0000	0.0000	0.0000	0.0000
Worker	0.0000	0.0000	0.0000	0.0000	0.0000	0.0000	0.0000	0.0000	0.0000	0.0000	0.0000	0.0000	0.0000	0.0000	0.0000	0.0000
Total	**0.0000**	**0.0000**	**0.0000**	**0.0000**	**0.0000**	**0.0000**	**0.0000**	**0.0000**	**0.0000**	**0.0000**	**0.0000**	**0.0000**	**0.0000**	**0.0000**	**0.0000**	**0.0000**

3.67 Year 10 Month 6 - 2029

Mitigated Construction On-Site

	ROG	NOx	CO	SO2	Fugitive PM10	Exhaust PM10	PM10 Total	Fugitive PM2.5	Exhaust PM2.5	PM2.5 Total	Bio- CO2	NBio- CO2	Total CO2	CH4	N2O	CO2e
Category	tons/yr										MT/yr					
Off-Road	1.7800e-003	0.0198	0.0635	1.3000e-004		1.9000e-004	1.9000e-004		1.9000e-004	1.9000e-004	0.0000	10.8524	10.8524	2.8700e-003	0.0000	10.9127
Total	**1.7800e-003**	**0.0198**	**0.0635**	**1.3000e-004**		**1.9000e-004**	**1.9000e-004**		**1.9000e-004**	**1.9000e-004**	**0.0000**	**10.8524**	**10.8524**	**2.8700e-003**	**0.0000**	**10.9127**

Mitigated Construction Off-Site

	ROG	NOx	CO	SO2	Fugitive PM10	Exhaust PM10	PM10 Total	Fugitive PM2.5	Exhaust PM2.5	PM2.5 Total	Bio- CO2	NBio- CO2	Total CO2	CH4	N2O	CO2e
Category	tons/yr										MT/yr					
Hauling	0.0000	0.0000	0.0000	0.0000	0.0000	0.0000	0.0000	0.0000	0.0000	0.0000	0.0000	0.0000	0.0000	0.0000	0.0000	0.0000
Vendor	0.0000	0.0000	0.0000	0.0000	0.0000	0.0000	0.0000	0.0000	0.0000	0.0000	0.0000	0.0000	0.0000	0.0000	0.0000	0.0000
Worker	0.0000	0.0000	0.0000	0.0000	0.0000	0.0000	0.0000	0.0000	0.0000	0.0000	0.0000	0.0000	0.0000	0.0000	0.0000	0.0000
Total	**0.0000**	**0.0000**	**0.0000**	**0.0000**	**0.0000**	**0.0000**	**0.0000**	**0.0000**	**0.0000**	**0.0000**	**0.0000**	**0.0000**	**0.0000**	**0.0000**	**0.0000**	**0.0000**

3.68 Year 10 Month 7 - 2029

Unmitigated Construction On-Site

	ROG	NOx	CO	SO2	Fugitive PM10	Exhaust PM10	PM10 Total	Fugitive PM2.5	Exhaust PM2.5	PM2.5 Total	Bio- CO2	NBio- CO2	Total CO2	CH4	N2O	CO2e
Category	tons/yr										MT/yr					
Off-Road	8.2300e-003	0.0703	0.0521	1.3000e-004		2.7500e-003	2.7500e-003		2.5800e-003	2.5800e-003	0.0000	10.8524	10.8524	2.8700e-003	0.0000	10.9127
Total	**8.2300e-003**	**0.0703**	**0.0521**	**1.3000e-004**		**2.7500e-003**	**2.7500e-003**		**2.5800e-003**	**2.5800e-003**	**0.0000**	**10.8524**	**10.8524**	**2.8700e-003**	**0.0000**	**10.9127**

Unmitigated Construction Off-Site

	ROG	NOx	CO	SO2	Fugitive PM10	Exhaust PM10	PM10 Total	Fugitive PM2.5	Exhaust PM2.5	PM2.5 Total	Bio- CO2	NBio- CO2	Total CO2	CH4	N2O	CO2e
Category	tons/yr										MT/yr					
Hauling	0.0000	0.0000	0.0000	0.0000	0.0000	0.0000	0.0000	0.0000	0.0000	0.0000	0.0000	0.0000	0.0000	0.0000	0.0000	0.0000
Vendor	0.0000	0.0000	0.0000	0.0000	0.0000	0.0000	0.0000	0.0000	0.0000	0.0000	0.0000	0.0000	0.0000	0.0000	0.0000	0.0000
Worker	0.0000	0.0000	0.0000	0.0000	0.0000	0.0000	0.0000	0.0000	0.0000	0.0000	0.0000	0.0000	0.0000	0.0000	0.0000	0.0000
Total	**0.0000**	**0.0000**	**0.0000**	**0.0000**	**0.0000**	**0.0000**	**0.0000**	**0.0000**	**0.0000**	**0.0000**	**0.0000**	**0.0000**	**0.0000**	**0.0000**	**0.0000**	**0.0000**

3.68 Year 10 Month 7 - 2029

Mitigated Construction On-Site

	ROG	NOx	CO	SO2	Fugitive PM10	Exhaust PM10	PM10 Total	Fugitive PM2.5	Exhaust PM2.5	PM2.5 Total	Bio- CO2	NBio- CO2	Total CO2	CH4	N2O	CO2e
Category	tons/yr										MT/yr					
Off-Road	1.7800e-003	0.0198	0.0635	1.3000e-004		1.9000e-004	1.9000e-004		1.9000e-004	1.9000e-004	0.0000	10.8524	10.8524	2.8700e-003	0.0000	10.9127
Total	**1.7800e-003**	**0.0198**	**0.0635**	**1.3000e-004**		**1.9000e-004**	**1.9000e-004**		**1.9000e-004**	**1.9000e-004**	**0.0000**	**10.8524**	**10.8524**	**2.8700e-003**	**0.0000**	**10.9127**

Mitigated Construction Off-Site

	ROG	NOx	CO	SO2	Fugitive PM10	Exhaust PM10	PM10 Total	Fugitive PM2.5	Exhaust PM2.5	PM2.5 Total	Bio- CO2	NBio- CO2	Total CO2	CH4	N2O	CO2e
Category	tons/yr										MT/yr					
Hauling	0.0000	0.0000	0.0000	0.0000	0.0000	0.0000	0.0000	0.0000	0.0000	0.0000	0.0000	0.0000	0.0000	0.0000	0.0000	0.0000
Vendor	0.0000	0.0000	0.0000	0.0000	0.0000	0.0000	0.0000	0.0000	0.0000	0.0000	0.0000	0.0000	0.0000	0.0000	0.0000	0.0000
Worker	0.0000	0.0000	0.0000	0.0000	0.0000	0.0000	0.0000	0.0000	0.0000	0.0000	0.0000	0.0000	0.0000	0.0000	0.0000	0.0000
Total	**0.0000**	**0.0000**	**0.0000**	**0.0000**	**0.0000**	**0.0000**	**0.0000**	**0.0000**	**0.0000**	**0.0000**	**0.0000**	**0.0000**	**0.0000**	**0.0000**	**0.0000**	**0.0000**

3.69 Year 10 Month 8 - 2029

Unmitigated Construction On-Site

	ROG	NOx	CO	SO2	Fugitive PM10	Exhaust PM10	PM10 Total	Fugitive PM2.5	Exhaust PM2.5	PM2.5 Total	Bio- CO2	NBio- CO2	Total CO2	CH4	N2O	CO2e
Category	tons/yr										MT/yr					
Off-Road	0.0193	0.1813	0.1439	3.6000e-004		7.5300e-003	7.5300e-003		6.9800e-003	6.9800e-003	0.0000	30.8995	30.8995	9.3300e-003	0.0000	31.0954
Total	**0.0193**	**0.1813**	**0.1439**	**3.6000e-004**		**7.5300e-003**	**7.5300e-003**		**6.9800e-003**	**6.9800e-003**	**0.0000**	**30.8995**	**30.8995**	**9.3300e-003**	**0.0000**	**31.0954**

Unmitigated Construction Off-Site

	ROG	NOx	CO	SO2	Fugitive PM10	Exhaust PM10	PM10 Total	Fugitive PM2.5	Exhaust PM2.5	PM2.5 Total	Bio- CO2	NBio- CO2	Total CO2	CH4	N2O	CO2e
Category	tons/yr										MT/yr					
Hauling	0.0000	0.0000	0.0000	0.0000	0.0000	0.0000	0.0000	0.0000	0.0000	0.0000	0.0000	0.0000	0.0000	0.0000	0.0000	0.0000
Vendor	0.0000	0.0000	0.0000	0.0000	0.0000	0.0000	0.0000	0.0000	0.0000	0.0000	0.0000	0.0000	0.0000	0.0000	0.0000	0.0000
Worker	0.0000	0.0000	0.0000	0.0000	0.0000	0.0000	0.0000	0.0000	0.0000	0.0000	0.0000	0.0000	0.0000	0.0000	0.0000	0.0000
Total	**0.0000**	**0.0000**	**0.0000**	**0.0000**	**0.0000**	**0.0000**	**0.0000**	**0.0000**	**0.0000**	**0.0000**	**0.0000**	**0.0000**	**0.0000**	**0.0000**	**0.0000**	**0.0000**

3.69 Year 10 Month 8 - 2029

Mitigated Construction On-Site

	ROG	NOx	CO	SO2	Fugitive PM10	Exhaust PM10	PM10 Total	Fugitive PM2.5	Exhaust PM2.5	PM2.5 Total	Bio- CO2	NBio- CO2	Total CO2	CH4	N2O	CO2e
Category	tons/yr										MT/yr					
Off-Road	4.6000e-003	0.0325	0.1914	3.6000e-004		5.7000e-004	5.7000e-004		5.7000e-004	5.7000e-004	0.0000	30.8994	30.8994	9.3300e-003	0.0000	31.0954
Total	**4.6000e-003**	**0.0325**	**0.1914**	**3.6000e-004**		**5.7000e-004**	**5.7000e-004**		**5.7000e-004**	**5.7000e-004**	**0.0000**	**30.8994**	**30.8994**	**9.3300e-003**	**0.0000**	**31.0954**

Mitigated Construction Off-Site

	ROG	NOx	CO	SO2	Fugitive PM10	Exhaust PM10	PM10 Total	Fugitive PM2.5	Exhaust PM2.5	PM2.5 Total	Bio- CO2	NBio- CO2	Total CO2	CH4	N2O	CO2e
Category	tons/yr										MT/yr					
Hauling	0.0000	0.0000	0.0000	0.0000	0.0000	0.0000	0.0000	0.0000	0.0000	0.0000	0.0000	0.0000	0.0000	0.0000	0.0000	0.0000
Vendor	0.0000	0.0000	0.0000	0.0000	0.0000	0.0000	0.0000	0.0000	0.0000	0.0000	0.0000	0.0000	0.0000	0.0000	0.0000	0.0000
Worker	0.0000	0.0000	0.0000	0.0000	0.0000	0.0000	0.0000	0.0000	0.0000	0.0000	0.0000	0.0000	0.0000	0.0000	0.0000	0.0000
Total	**0.0000**	**0.0000**	**0.0000**	**0.0000**	**0.0000**	**0.0000**	**0.0000**	**0.0000**	**0.0000**	**0.0000**	**0.0000**	**0.0000**	**0.0000**	**0.0000**	**0.0000**	**0.0000**

3.70 Year 10 Month 9 - 2029

Unmitigated Construction On-Site

	ROG	NOx	CO	SO2	Fugitive PM10	Exhaust PM10	PM10 Total	Fugitive PM2.5	Exhaust PM2.5	PM2.5 Total	Bio- CO2	NBio- CO2	Total CO2	CH4	N2O	CO2e
Category	tons/yr										MT/yr					
Off-Road	9.9200e-003	0.1003	0.0832	2.1000e-004		4.3300e-003	4.3300e-003		3.9800e-003	3.9800e-003	0.0000	18.1756	18.1756	5.8800e-003	0.0000	18.2991
Total	**9.9200e-003**	**0.1003**	**0.0832**	**2.1000e-004**		**4.3300e-003**	**4.3300e-003**		**3.9800e-003**	**3.9800e-003**	**0.0000**	**18.1756**	**18.1756**	**5.8800e-003**	**0.0000**	**18.2991**

Unmitigated Construction Off-Site

	ROG	NOx	CO	SO2	Fugitive PM10	Exhaust PM10	PM10 Total	Fugitive PM2.5	Exhaust PM2.5	PM2.5 Total	Bio- CO2	NBio- CO2	Total CO2	CH4	N2O	CO2e
Category	tons/yr										MT/yr					
Hauling	0.0000	0.0000	0.0000	0.0000	0.0000	0.0000	0.0000	0.0000	0.0000	0.0000	0.0000	0.0000	0.0000	0.0000	0.0000	0.0000
Vendor	0.0000	0.0000	0.0000	0.0000	0.0000	0.0000	0.0000	0.0000	0.0000	0.0000	0.0000	0.0000	0.0000	0.0000	0.0000	0.0000
Worker	0.0000	0.0000	0.0000	0.0000	0.0000	0.0000	0.0000	0.0000	0.0000	0.0000	0.0000	0.0000	0.0000	0.0000	0.0000	0.0000
Total	**0.0000**	**0.0000**	**0.0000**	**0.0000**	**0.0000**	**0.0000**	**0.0000**	**0.0000**	**0.0000**	**0.0000**	**0.0000**	**0.0000**	**0.0000**	**0.0000**	**0.0000**	**0.0000**

3.70 Year 10 Month 9 - 2029

Mitigated Construction On-Site

	ROG	NOx	CO	SO2	Fugitive PM10	Exhaust PM10	PM10 Total	Fugitive PM2.5	Exhaust PM2.5	PM2.5 Total	Bio- CO2	NBio- CO2	Total CO2	CH4	N2O	CO2e
Category	tons/yr										MT/yr					
Off-Road	2.5500e-003	0.0111	0.1162	2.1000e-004		3.4000e-004	3.4000e-004		3.4000e-004	3.4000e-004	0.0000	18.1756	18.1756	5.8800e-003	0.0000	18.2990
Total	**2.5500e-003**	**0.0111**	**0.1162**	**2.1000e-004**		**3.4000e-004**	**3.4000e-004**		**3.4000e-004**	**3.4000e-004**	**0.0000**	**18.1756**	**18.1756**	**5.8800e-003**	**0.0000**	**18.2990**

Mitigated Construction Off-Site

	ROG	NOx	CO	SO2	Fugitive PM10	Exhaust PM10	PM10 Total	Fugitive PM2.5	Exhaust PM2.5	PM2.5 Total	Bio- CO2	NBio- CO2	Total CO2	CH4	N2O	CO2e
Category	tons/yr										MT/yr					
Hauling	0.0000	0.0000	0.0000	0.0000	0.0000	0.0000	0.0000	0.0000	0.0000	0.0000	0.0000	0.0000	0.0000	0.0000	0.0000	0.0000
Vendor	0.0000	0.0000	0.0000	0.0000	0.0000	0.0000	0.0000	0.0000	0.0000	0.0000	0.0000	0.0000	0.0000	0.0000	0.0000	0.0000
Worker	0.0000	0.0000	0.0000	0.0000	0.0000	0.0000	0.0000	0.0000	0.0000	0.0000	0.0000	0.0000	0.0000	0.0000	0.0000	0.0000
Total	**0.0000**	**0.0000**	**0.0000**	**0.0000**	**0.0000**	**0.0000**	**0.0000**	**0.0000**	**0.0000**	**0.0000**	**0.0000**	**0.0000**	**0.0000**	**0.0000**	**0.0000**	**0.0000**

3.71 Year 10 Month 10 - 2029

Unmitigated Construction On-Site

	ROG	NOx	CO	SO2	Fugitive PM10	Exhaust PM10	PM10 Total	Fugitive PM2.5	Exhaust PM2.5	PM2.5 Total	Bio- CO2	NBio- CO2	Total CO2	CH4	N2O	CO2e
Category	tons/yr										MT/yr					
Off-Road	0.0107	0.1083	0.0898	2.2000e-004		4.6700e-003	4.6700e-003		4.3000e-003	4.3000e-003	0.0000	19.6297	19.6297	6.3500e-003	0.0000	19.7630
Total	**0.0107**	**0.1083**	**0.0898**	**2.2000e-004**		**4.6700e-003**	**4.6700e-003**		**4.3000e-003**	**4.3000e-003**	**0.0000**	**19.6297**	**19.6297**	**6.3500e-003**	**0.0000**	**19.7630**

Unmitigated Construction Off-Site

	ROG	NOx	CO	SO2	Fugitive PM10	Exhaust PM10	PM10 Total	Fugitive PM2.5	Exhaust PM2.5	PM2.5 Total	Bio- CO2	NBio- CO2	Total CO2	CH4	N2O	CO2e
Category	tons/yr										MT/yr					
Hauling	0.0000	0.0000	0.0000	0.0000	0.0000	0.0000	0.0000	0.0000	0.0000	0.0000	0.0000	0.0000	0.0000	0.0000	0.0000	0.0000
Vendor	0.0000	0.0000	0.0000	0.0000	0.0000	0.0000	0.0000	0.0000	0.0000	0.0000	0.0000	0.0000	0.0000	0.0000	0.0000	0.0000
Worker	0.0000	0.0000	0.0000	0.0000	0.0000	0.0000	0.0000	0.0000	0.0000	0.0000	0.0000	0.0000	0.0000	0.0000	0.0000	0.0000
Total	**0.0000**	**0.0000**	**0.0000**	**0.0000**	**0.0000**	**0.0000**	**0.0000**	**0.0000**	**0.0000**	**0.0000**	**0.0000**	**0.0000**	**0.0000**	**0.0000**	**0.0000**	**0.0000**

3.71 Year 10 Month 10 - 2029

Mitigated Construction On-Site

	ROG	NOx	CO	SO2	Fugitive PM10	Exhaust PM10	PM10 Total	Fugitive PM2.5	Exhaust PM2.5	PM2.5 Total	Bio- CO2	NBio- CO2	Total CO2	CH4	N2O	CO2e
Category	tons/yr										MT/yr					
Off-Road	2.7600e-003	0.0119	0.1255	2.2000e-004		3.7000e-004	3.7000e-004		3.7000e-004	3.7000e-004	0.0000	19.6297	19.6297	6.3500e-003	0.0000	19.7630
Total	**2.7600e-003**	**0.0119**	**0.1255**	**2.2000e-004**		**3.7000e-004**	**3.7000e-004**		**3.7000e-004**	**3.7000e-004**	**0.0000**	**19.6297**	**19.6297**	**6.3500e-003**	**0.0000**	**19.7630**

Mitigated Construction Off-Site

	ROG	NOx	CO	SO2	Fugitive PM10	Exhaust PM10	PM10 Total	Fugitive PM2.5	Exhaust PM2.5	PM2.5 Total	Bio- CO2	NBio- CO2	Total CO2	CH4	N2O	CO2e
Category	tons/yr										MT/yr					
Hauling	0.0000	0.0000	0.0000	0.0000	0.0000	0.0000	0.0000	0.0000	0.0000	0.0000	0.0000	0.0000	0.0000	0.0000	0.0000	0.0000
Vendor	0.0000	0.0000	0.0000	0.0000	0.0000	0.0000	0.0000	0.0000	0.0000	0.0000	0.0000	0.0000	0.0000	0.0000	0.0000	0.0000
Worker	0.0000	0.0000	0.0000	0.0000	0.0000	0.0000	0.0000	0.0000	0.0000	0.0000	0.0000	0.0000	0.0000	0.0000	0.0000	0.0000
Total	**0.0000**	**0.0000**	**0.0000**	**0.0000**	**0.0000**	**0.0000**	**0.0000**	**0.0000**	**0.0000**	**0.0000**	**0.0000**	**0.0000**	**0.0000**	**0.0000**	**0.0000**	**0.0000**

3.72 Year 10 Month 11 - 2029

Unmitigated Construction Off-Site

	ROG	NOx	CO	SO2	Fugitive PM10	Exhaust PM10	PM10 Total	Fugitive PM2.5	Exhaust PM2.5	PM2.5 Total	Bio- CO2	NBio- CO2	Total CO2	CH4	N2O	CO2e
Category	tons/yr										MT/yr					
Hauling					0.0000	0.0000	0.0000	0.0000	0.0000	0.0000	0.0000	0.0000	0.0000	0.0000	0.0000	0.0000
Vendor					0.0000	0.0000	0.0000	0.0000	0.0000	0.0000	0.0000	0.0000	0.0000	0.0000	0.0000	0.0000
Worker					0.0000	0.0000	0.0000	0.0000	0.0000	0.0000	0.0000	0.0000	0.0000	0.0000	0.0000	0.0000
Total					**0.0000**	**0.0000**	**0.0000**	**0.0000**	**0.0000**	**0.0000**	**0.0000**	**0.0000**	**0.0000**	**0.0000**	**0.0000**	**0.0000**

Mitigated Construction Off-Site

	ROG	NOx	CO	SO2	Fugitive PM10	Exhaust PM10	PM10 Total	Fugitive PM2.5	Exhaust PM2.5	PM2.5 Total	Bio- CO2	NBio- CO2	Total CO2	CH4	N2O	CO2e
Category	tons/yr										MT/yr					
Hauling					0.0000	0.0000	0.0000	0.0000	0.0000	0.0000	0.0000	0.0000	0.0000	0.0000	0.0000	0.0000
Vendor					0.0000	0.0000	0.0000	0.0000	0.0000	0.0000	0.0000	0.0000	0.0000	0.0000	0.0000	0.0000
Worker					0.0000	0.0000	0.0000	0.0000	0.0000	0.0000	0.0000	0.0000	0.0000	0.0000	0.0000	0.0000
Total					**0.0000**	**0.0000**	**0.0000**	**0.0000**	**0.0000**	**0.0000**	**0.0000**	**0.0000**	**0.0000**	**0.0000**	**0.0000**	**0.0000**

3.73 Year 10 Month 12 - 2029

Unmitigated Construction Off-Site

	ROG	NOx	CO	SO2	Fugitive PM10	Exhaust PM10	PM10 Total	Fugitive PM2.5	Exhaust PM2.5	PM2.5 Total	Bio- CO2	NBio- CO2	Total CO2	CH4	N2O	CO2e
Category	tons/yr										MT/yr					
Hauling					0.0000	0.0000	0.0000	0.0000	0.0000	0.0000	0.0000	0.0000	0.0000	0.0000	0.0000	0.0000
Vendor					0.0000	0.0000	0.0000	0.0000	0.0000	0.0000	0.0000	0.0000	0.0000	0.0000	0.0000	0.0000
Worker					0.0000	0.0000	0.0000	0.0000	0.0000	0.0000	0.0000	0.0000	0.0000	0.0000	0.0000	0.0000
Total					**0.0000**	**0.0000**	**0.0000**	**0.0000**	**0.0000**	**0.0000**	**0.0000**	**0.0000**	**0.0000**	**0.0000**	**0.0000**	**0.0000**

Mitigated Construction Off-Site

	ROG	NOx	CO	SO2	Fugitive PM10	Exhaust PM10	PM10 Total	Fugitive PM2.5	Exhaust PM2.5	PM2.5 Total	Bio- CO2	NBio- CO2	Total CO2	CH4	N2O	CO2e
Category	tons/yr										MT/yr					
Hauling					0.0000	0.0000	0.0000	0.0000	0.0000	0.0000	0.0000	0.0000	0.0000	0.0000	0.0000	0.0000
Vendor					0.0000	0.0000	0.0000	0.0000	0.0000	0.0000	0.0000	0.0000	0.0000	0.0000	0.0000	0.0000
Worker					0.0000	0.0000	0.0000	0.0000	0.0000	0.0000	0.0000	0.0000	0.0000	0.0000	0.0000	0.0000
Total					**0.0000**	**0.0000**	**0.0000**	**0.0000**	**0.0000**	**0.0000**	**0.0000**	**0.0000**	**0.0000**	**0.0000**	**0.0000**	**0.0000**

3.74 Year 11 Month 1 - 2030

Unmitigated Construction On-Site

	ROG	NOx	CO	SO2	Fugitive PM10	Exhaust PM10	PM10 Total	Fugitive PM2.5	Exhaust PM2.5	PM2.5 Total	Bio- CO2	NBio- CO2	Total CO2	CH4	N2O	CO2e
Category	tons/yr										MT/yr					
Off-Road	0.0164	0.0657	0.1708	4.2000e-004		2.3300e-003	2.3300e-003		2.3300e-003	2.3300e-003	0.0000	36.3271	36.3271	1.3000e-003	0.0000	36.3543
Total	**0.0164**	**0.0657**	**0.1708**	**4.2000e-004**		**2.3300e-003**	**2.3300e-003**		**2.3300e-003**	**2.3300e-003**	**0.0000**	**36.3271**	**36.3271**	**1.3000e-003**	**0.0000**	**36.3543**

Unmitigated Construction Off-Site

	ROG	NOx	CO	SO2	Fugitive PM10	Exhaust PM10	PM10 Total	Fugitive PM2.5	Exhaust PM2.5	PM2.5 Total	Bio- CO2	NBio- CO2	Total CO2	CH4	N2O	CO2e
Category	tons/yr										MT/yr					
Hauling	0.0000	0.0000	0.0000	0.0000	0.0000	0.0000	0.0000	0.0000	0.0000	0.0000	0.0000	0.0000	0.0000	0.0000	0.0000	0.0000
Vendor	0.0000	0.0000	0.0000	0.0000	0.0000	0.0000	0.0000	0.0000	0.0000	0.0000	0.0000	0.0000	0.0000	0.0000	0.0000	0.0000
Worker	0.0000	0.0000	0.0000	0.0000	0.0000	0.0000	0.0000	0.0000	0.0000	0.0000	0.0000	0.0000	0.0000	0.0000	0.0000	0.0000
Total	**0.0000**	**0.0000**	**0.0000**	**0.0000**	**0.0000**	**0.0000**	**0.0000**	**0.0000**	**0.0000**	**0.0000**	**0.0000**	**0.0000**	**0.0000**	**0.0000**	**0.0000**	**0.0000**

3.74 Year 11 Month 1 - 2030

Mitigated Construction On-Site

	ROG	NOx	CO	SO2	Fugitive PM10	Exhaust PM10	PM10 Total	Fugitive PM2.5	Exhaust PM2.5	PM2.5 Total	Bio- CO2	NBio- CO2	Total CO2	CH4	N2O	CO2e
Category	tons/yr										MT/yr					
Off-Road	4.6700e-003	0.0366	0.2162	4.2000e-004		5.6000e-004	5.6000e-004		5.6000e-004	5.6000e-004	0.0000	36.3271	36.3271	1.3000e-003	0.0000	36.3543
Total	**4.6700e-003**	**0.0366**	**0.2162**	**4.2000e-004**		**5.6000e-004**	**5.6000e-004**		**5.6000e-004**	**5.6000e-004**	**0.0000**	**36.3271**	**36.3271**	**1.3000e-003**	**0.0000**	**36.3543**

Mitigated Construction Off-Site

	ROG	NOx	CO	SO2	Fugitive PM10	Exhaust PM10	PM10 Total	Fugitive PM2.5	Exhaust PM2.5	PM2.5 Total	Bio- CO2	NBio- CO2	Total CO2	CH4	N2O	CO2e
Category	tons/yr										MT/yr					
Hauling	0.0000	0.0000	0.0000	0.0000	0.0000	0.0000	0.0000	0.0000	0.0000	0.0000	0.0000	0.0000	0.0000	0.0000	0.0000	0.0000
Vendor	0.0000	0.0000	0.0000	0.0000	0.0000	0.0000	0.0000	0.0000	0.0000	0.0000	0.0000	0.0000	0.0000	0.0000	0.0000	0.0000
Worker	0.0000	0.0000	0.0000	0.0000	0.0000	0.0000	0.0000	0.0000	0.0000	0.0000	0.0000	0.0000	0.0000	0.0000	0.0000	0.0000
Total	**0.0000**	**0.0000**	**0.0000**	**0.0000**	**0.0000**	**0.0000**	**0.0000**	**0.0000**	**0.0000**	**0.0000**	**0.0000**	**0.0000**	**0.0000**	**0.0000**	**0.0000**	**0.0000**

3.75 Year 11 Month 2 - 2030

Unmitigated Construction On-Site

	ROG	NOx	CO	SO2	Fugitive PM10	Exhaust PM10	PM10 Total	Fugitive PM2.5	Exhaust PM2.5	PM2.5 Total	Bio- CO2	NBio- CO2	Total CO2	CH4	N2O	CO2e
Category	tons/yr										MT/yr					
Off-Road	0.0291	0.1237	0.2806	7.4000e-004		3.6300e-003	3.6300e-003		3.6300e-003	3.6300e-003	0.0000	62.7716	62.7716	2.3300e-003	0.0000	62.8205
Total	**0.0291**	**0.1237**	**0.2806**	**7.4000e-004**		**3.6300e-003**	**3.6300e-003**		**3.6300e-003**	**3.6300e-003**	**0.0000**	**62.7716**	**62.7716**	**2.3300e-003**	**0.0000**	**62.8205**

Unmitigated Construction Off-Site

	ROG	NOx	CO	SO2	Fugitive PM10	Exhaust PM10	PM10 Total	Fugitive PM2.5	Exhaust PM2.5	PM2.5 Total	Bio- CO2	NBio- CO2	Total CO2	CH4	N2O	CO2e
Category	tons/yr										MT/yr					
Hauling	0.0000	0.0000	0.0000	0.0000	0.0000	0.0000	0.0000	0.0000	0.0000	0.0000	0.0000	0.0000	0.0000	0.0000	0.0000	0.0000
Vendor	0.0000	0.0000	0.0000	0.0000	0.0000	0.0000	0.0000	0.0000	0.0000	0.0000	0.0000	0.0000	0.0000	0.0000	0.0000	0.0000
Worker	0.0000	0.0000	0.0000	0.0000	0.0000	0.0000	0.0000	0.0000	0.0000	0.0000	0.0000	0.0000	0.0000	0.0000	0.0000	0.0000
Total	**0.0000**	**0.0000**	**0.0000**	**0.0000**	**0.0000**	**0.0000**	**0.0000**	**0.0000**	**0.0000**	**0.0000**	**0.0000**	**0.0000**	**0.0000**	**0.0000**	**0.0000**	**0.0000**

3.75 Year 11 Month 2 - 2030

Mitigated Construction On-Site

	ROG	NOx	CO	SO2	Fugitive PM10	Exhaust PM10	PM10 Total	Fugitive PM2.5	Exhaust PM2.5	PM2.5 Total	Bio- CO2	NBio- CO2	Total CO2	CH4	N2O	CO2e
Category	tons/yr										MT/yr					
Off-Road	8.3000e-003	0.0728	0.3629	7.4000e-004		9.7000e-004	9.7000e-004		9.7000e-004	9.7000e-004	0.0000	62.7715	62.7715	2.3300e-003	0.0000	62.8204
Total	**8.3000e-003**	**0.0728**	**0.3629**	**7.4000e-004**		**9.7000e-004**	**9.7000e-004**		**9.7000e-004**	**9.7000e-004**	**0.0000**	**62.7715**	**62.7715**	**2.3300e-003**	**0.0000**	**62.8204**

Mitigated Construction Off-Site

	ROG	NOx	CO	SO2	Fugitive PM10	Exhaust PM10	PM10 Total	Fugitive PM2.5	Exhaust PM2.5	PM2.5 Total	Bio- CO2	NBio- CO2	Total CO2	CH4	N2O	CO2e
Category	tons/yr										MT/yr					
Hauling	0.0000	0.0000	0.0000	0.0000	0.0000	0.0000	0.0000	0.0000	0.0000	0.0000	0.0000	0.0000	0.0000	0.0000	0.0000	0.0000
Vendor	0.0000	0.0000	0.0000	0.0000	0.0000	0.0000	0.0000	0.0000	0.0000	0.0000	0.0000	0.0000	0.0000	0.0000	0.0000	0.0000
Worker	0.0000	0.0000	0.0000	0.0000	0.0000	0.0000	0.0000	0.0000	0.0000	0.0000	0.0000	0.0000	0.0000	0.0000	0.0000	0.0000
Total	**0.0000**	**0.0000**	**0.0000**	**0.0000**	**0.0000**	**0.0000**	**0.0000**	**0.0000**	**0.0000**	**0.0000**	**0.0000**	**0.0000**	**0.0000**	**0.0000**	**0.0000**	**0.0000**

3.76 Year 11 Month 3 - 2030

Unmitigated Construction On-Site

	ROG	NOx	CO	SO2	Fugitive PM10	Exhaust PM10	PM10 Total	Fugitive PM2.5	Exhaust PM2.5	PM2.5 Total	Bio- CO2	NBio- CO2	Total CO2	CH4	N2O	CO2e
Category	tons/yr										MT/yr					
Off-Road	0.0316	0.1340	0.3040	8.0000e-004		3.9300e-003	3.9300e-003		3.9300e-003	3.9300e-003	0.0000	68.0025	68.0025	2.5200e-003	0.0000	68.0555
Total	**0.0316**	**0.1340**	**0.3040**	**8.0000e-004**		**3.9300e-003**	**3.9300e-003**		**3.9300e-003**	**3.9300e-003**	**0.0000**	**68.0025**	**68.0025**	**2.5200e-003**	**0.0000**	**68.0555**

Unmitigated Construction Off-Site

	ROG	NOx	CO	SO2	Fugitive PM10	Exhaust PM10	PM10 Total	Fugitive PM2.5	Exhaust PM2.5	PM2.5 Total	Bio- CO2	NBio- CO2	Total CO2	CH4	N2O	CO2e
Category	tons/yr										MT/yr					
Hauling	0.0000	0.0000	0.0000	0.0000	0.0000	0.0000	0.0000	0.0000	0.0000	0.0000	0.0000	0.0000	0.0000	0.0000	0.0000	0.0000
Vendor	0.0000	0.0000	0.0000	0.0000	0.0000	0.0000	0.0000	0.0000	0.0000	0.0000	0.0000	0.0000	0.0000	0.0000	0.0000	0.0000
Worker	0.0000	0.0000	0.0000	0.0000	0.0000	0.0000	0.0000	0.0000	0.0000	0.0000	0.0000	0.0000	0.0000	0.0000	0.0000	0.0000
Total	**0.0000**	**0.0000**	**0.0000**	**0.0000**	**0.0000**	**0.0000**	**0.0000**	**0.0000**	**0.0000**	**0.0000**	**0.0000**	**0.0000**	**0.0000**	**0.0000**	**0.0000**	**0.0000**

3.76 Year 11 Month 3 - 2030

Mitigated Construction On-Site

	ROG	NOx	CO	SO2	Fugitive PM10	Exhaust PM10	PM10 Total	Fugitive PM2.5	Exhaust PM2.5	PM2.5 Total	Bio- CO2	NBio- CO2	Total CO2	CH4	N2O	CO2e
Category	tons/yr										MT/yr					
Off-Road	8.9900e-003	0.0789	0.3931	8.0000e-004		1.0600e-003	1.0600e-003		1.0600e-003	1.0600e-003	0.0000	68.0025	68.0025	2.5200e-003	0.0000	68.0555
Total	**8.9900e-003**	**0.0789**	**0.3931**	**8.0000e-004**		**1.0600e-003**	**1.0600e-003**		**1.0600e-003**	**1.0600e-003**	**0.0000**	**68.0025**	**68.0025**	**2.5200e-003**	**0.0000**	**68.0555**

Mitigated Construction Off-Site

	ROG	NOx	CO	SO2	Fugitive PM10	Exhaust PM10	PM10 Total	Fugitive PM2.5	Exhaust PM2.5	PM2.5 Total	Bio- CO2	NBio- CO2	Total CO2	CH4	N2O	CO2e
Category	tons/yr										MT/yr					
Hauling	0.0000	0.0000	0.0000	0.0000	0.0000	0.0000	0.0000	0.0000	0.0000	0.0000	0.0000	0.0000	0.0000	0.0000	0.0000	0.0000
Vendor	0.0000	0.0000	0.0000	0.0000	0.0000	0.0000	0.0000	0.0000	0.0000	0.0000	0.0000	0.0000	0.0000	0.0000	0.0000	0.0000
Worker	0.0000	0.0000	0.0000	0.0000	0.0000	0.0000	0.0000	0.0000	0.0000	0.0000	0.0000	0.0000	0.0000	0.0000	0.0000	0.0000
Total	**0.0000**	**0.0000**	**0.0000**	**0.0000**	**0.0000**	**0.0000**	**0.0000**	**0.0000**	**0.0000**	**0.0000**	**0.0000**	**0.0000**	**0.0000**	**0.0000**	**0.0000**	**0.0000**

3.77 Year 11 Month 4 - 2030

Unmitigated Construction On-Site

	ROG	NOx	CO	SO2	Fugitive PM10	Exhaust PM10	PM10 Total	Fugitive PM2.5	Exhaust PM2.5	PM2.5 Total	Bio- CO2	NBio- CO2	Total CO2	CH4	N2O	CO2e
Category	tons/yr										MT/yr					
Off-Road	0.0200	0.0848	0.1611	5.1000e-004		2.1400e-003	2.1400e-003		2.1400e-003	2.1400e-003	0.0000	42.7049	42.7049	1.6100e-003	0.0000	42.7388
Total	**0.0200**	**0.0848**	**0.1611**	**5.1000e-004**		**2.1400e-003**	**2.1400e-003**		**2.1400e-003**	**2.1400e-003**	**0.0000**	**42.7049**	**42.7049**	**1.6100e-003**	**0.0000**	**42.7388**

Unmitigated Construction Off-Site

	ROG	NOx	CO	SO2	Fugitive PM10	Exhaust PM10	PM10 Total	Fugitive PM2.5	Exhaust PM2.5	PM2.5 Total	Bio- CO2	NBio- CO2	Total CO2	CH4	N2O	CO2e
Category	tons/yr										MT/yr					
Hauling	0.0000	0.0000	0.0000	0.0000	0.0000	0.0000	0.0000	0.0000	0.0000	0.0000	0.0000	0.0000	0.0000	0.0000	0.0000	0.0000
Vendor	0.0000	0.0000	0.0000	0.0000	0.0000	0.0000	0.0000	0.0000	0.0000	0.0000	0.0000	0.0000	0.0000	0.0000	0.0000	0.0000
Worker	0.0000	0.0000	0.0000	0.0000	0.0000	0.0000	0.0000	0.0000	0.0000	0.0000	0.0000	0.0000	0.0000	0.0000	0.0000	0.0000
Total	**0.0000**	**0.0000**	**0.0000**	**0.0000**	**0.0000**	**0.0000**	**0.0000**	**0.0000**	**0.0000**	**0.0000**	**0.0000**	**0.0000**	**0.0000**	**0.0000**	**0.0000**	**0.0000**

3.77 Year 11 Month 4 - 2030

Mitigated Construction On-Site

	ROG	NOx	CO	SO2	Fugitive PM10	Exhaust PM10	PM10 Total	Fugitive PM2.5	Exhaust PM2.5	PM2.5 Total	Bio- CO2	NBio- CO2	Total CO2	CH4	N2O	CO2e
Category	tons/yr										MT/yr					
Off-Road	5.6200e-003	0.0485	0.2263	5.1000e-004		6.6000e-004	6.6000e-004		6.6000e-004	6.6000e-004	0.0000	42.7049	42.7049	1.6100e-003	0.0000	42.7388
Total	**5.6200e-003**	**0.0485**	**0.2263**	**5.1000e-004**		**6.6000e-004**	**6.6000e-004**		**6.6000e-004**	**6.6000e-004**	**0.0000**	**42.7049**	**42.7049**	**1.6100e-003**	**0.0000**	**42.7388**

Mitigated Construction Off-Site

	ROG	NOx	CO	SO2	Fugitive PM10	Exhaust PM10	PM10 Total	Fugitive PM2.5	Exhaust PM2.5	PM2.5 Total	Bio- CO2	NBio- CO2	Total CO2	CH4	N2O	CO2e
Category	tons/yr										MT/yr					
Hauling	0.0000	0.0000	0.0000	0.0000	0.0000	0.0000	0.0000	0.0000	0.0000	0.0000	0.0000	0.0000	0.0000	0.0000	0.0000	0.0000
Vendor	0.0000	0.0000	0.0000	0.0000	0.0000	0.0000	0.0000	0.0000	0.0000	0.0000	0.0000	0.0000	0.0000	0.0000	0.0000	0.0000
Worker	0.0000	0.0000	0.0000	0.0000	0.0000	0.0000	0.0000	0.0000	0.0000	0.0000	0.0000	0.0000	0.0000	0.0000	0.0000	0.0000
Total	**0.0000**	**0.0000**	**0.0000**	**0.0000**	**0.0000**	**0.0000**	**0.0000**	**0.0000**	**0.0000**	**0.0000**	**0.0000**	**0.0000**	**0.0000**	**0.0000**	**0.0000**	**0.0000**

3.78 Year 11 Month 5 - 2030

Unmitigated Construction On-Site

	ROG	NOx	CO	SO2	Fugitive PM10	Exhaust PM10	PM10 Total	Fugitive PM2.5	Exhaust PM2.5	PM2.5 Total	Bio- CO2	NBio- CO2	Total CO2	CH4	N2O	CO2e
Category	tons/yr										MT/yr					
Off-Road	0.0164	0.0735	0.1449	4.1000e-004		1.7500e-003	1.7500e-003		1.7500e-003	1.7500e-003	0.0000	34.2909	34.2909	1.3200e-003	0.0000	34.3187
Total	**0.0164**	**0.0735**	**0.1449**	**4.1000e-004**		**1.7500e-003**	**1.7500e-003**		**1.7500e-003**	**1.7500e-003**	**0.0000**	**34.2909**	**34.2909**	**1.3200e-003**	**0.0000**	**34.3187**

Unmitigated Construction Off-Site

	ROG	NOx	CO	SO2	Fugitive PM10	Exhaust PM10	PM10 Total	Fugitive PM2.5	Exhaust PM2.5	PM2.5 Total	Bio- CO2	NBio- CO2	Total CO2	CH4	N2O	CO2e
Category	tons/yr										MT/yr					
Hauling	0.0000	0.0000	0.0000	0.0000	0.0000	0.0000	0.0000	0.0000	0.0000	0.0000	0.0000	0.0000	0.0000	0.0000	0.0000	0.0000
Vendor	0.0000	0.0000	0.0000	0.0000	0.0000	0.0000	0.0000	0.0000	0.0000	0.0000	0.0000	0.0000	0.0000	0.0000	0.0000	0.0000
Worker	0.0000	0.0000	0.0000	0.0000	0.0000	0.0000	0.0000	0.0000	0.0000	0.0000	0.0000	0.0000	0.0000	0.0000	0.0000	0.0000
Total	**0.0000**	**0.0000**	**0.0000**	**0.0000**	**0.0000**	**0.0000**	**0.0000**	**0.0000**	**0.0000**	**0.0000**	**0.0000**	**0.0000**	**0.0000**	**0.0000**	**0.0000**	**0.0000**

3.78 Year 11 Month 5 - 2030

Mitigated Construction On-Site

	ROG	NOx	CO	SO2	Fugitive PM10	Exhaust PM10	PM10 Total	Fugitive PM2.5	Exhaust PM2.5	PM2.5 Total	Bio- CO2	NBio- CO2	Total CO2	CH4	N2O	CO2e
Category	tons/yr										MT/yr					
Off-Road	4.6700e-003	0.0453	0.1921	4.1000e-004		5.3000e-004	5.3000e-004		5.3000e-004	5.3000e-004	0.0000	34.2909	34.2909	1.3200e-003	0.0000	34.3187
Total	**4.6700e-003**	**0.0453**	**0.1921**	**4.1000e-004**		**5.3000e-004**	**5.3000e-004**		**5.3000e-004**	**5.3000e-004**	**0.0000**	**34.2909**	**34.2909**	**1.3200e-003**	**0.0000**	**34.3187**

Mitigated Construction Off-Site

	ROG	NOx	CO	SO2	Fugitive PM10	Exhaust PM10	PM10 Total	Fugitive PM2.5	Exhaust PM2.5	PM2.5 Total	Bio- CO2	NBio- CO2	Total CO2	CH4	N2O	CO2e
Category	tons/yr										MT/yr					
Hauling	0.0000	0.0000	0.0000	0.0000	0.0000	0.0000	0.0000	0.0000	0.0000	0.0000	0.0000	0.0000	0.0000	0.0000	0.0000	0.0000
Vendor	0.0000	0.0000	0.0000	0.0000	0.0000	0.0000	0.0000	0.0000	0.0000	0.0000	0.0000	0.0000	0.0000	0.0000	0.0000	0.0000
Worker	0.0000	0.0000	0.0000	0.0000	0.0000	0.0000	0.0000	0.0000	0.0000	0.0000	0.0000	0.0000	0.0000	0.0000	0.0000	0.0000
Total	**0.0000**	**0.0000**	**0.0000**	**0.0000**	**0.0000**	**0.0000**	**0.0000**	**0.0000**	**0.0000**	**0.0000**	**0.0000**	**0.0000**	**0.0000**	**0.0000**	**0.0000**	**0.0000**

3.79 Year 11 Month 6 - 2030

Unmitigated Construction On-Site

	ROG	NOx	CO	SO2	Fugitive PM10	Exhaust PM10	PM10 Total	Fugitive PM2.5	Exhaust PM2.5	PM2.5 Total	Bio- CO2	NBio- CO2	Total CO2	CH4	N2O	CO2e
Category	tons/yr										MT/yr					
Off-Road	0.0152	0.0680	0.1342	3.8000e-004		1.6200e-003	1.6200e-003		1.6200e-003	1.6200e-003	0.0000	31.7509	31.7509	1.2200e-003	0.0000	31.7766
Total	**0.0152**	**0.0680**	**0.1342**	**3.8000e-004**		**1.6200e-003**	**1.6200e-003**		**1.6200e-003**	**1.6200e-003**	**0.0000**	**31.7509**	**31.7509**	**1.2200e-003**	**0.0000**	**31.7766**

Unmitigated Construction Off-Site

	ROG	NOx	CO	SO2	Fugitive PM10	Exhaust PM10	PM10 Total	Fugitive PM2.5	Exhaust PM2.5	PM2.5 Total	Bio- CO2	NBio- CO2	Total CO2	CH4	N2O	CO2e
Category	tons/yr										MT/yr					
Hauling	0.0000	0.0000	0.0000	0.0000	0.0000	0.0000	0.0000	0.0000	0.0000	0.0000	0.0000	0.0000	0.0000	0.0000	0.0000	0.0000
Vendor	0.0000	0.0000	0.0000	0.0000	0.0000	0.0000	0.0000	0.0000	0.0000	0.0000	0.0000	0.0000	0.0000	0.0000	0.0000	0.0000
Worker	0.0000	0.0000	0.0000	0.0000	0.0000	0.0000	0.0000	0.0000	0.0000	0.0000	0.0000	0.0000	0.0000	0.0000	0.0000	0.0000
Total	**0.0000**	**0.0000**	**0.0000**	**0.0000**	**0.0000**	**0.0000**	**0.0000**	**0.0000**	**0.0000**	**0.0000**	**0.0000**	**0.0000**	**0.0000**	**0.0000**	**0.0000**	**0.0000**

3.79 Year 11 Month 6 - 2030

Mitigated Construction On-Site

	ROG	NOx	CO	SO2	Fugitive PM10	Exhaust PM10	PM10 Total	Fugitive PM2.5	Exhaust PM2.5	PM2.5 Total	Bio- CO2	NBio- CO2	Total CO2	CH4	N2O	CO2e
Category	tons/yr										MT/yr					
Off-Road	4.3200e-003	0.0420	0.1779	3.8000e-004		4.9000e-004	4.9000e-004		4.9000e-004	4.9000e-004	0.0000	31.7508	31.7508	1.2200e-003	0.0000	31.7765
Total	**4.3200e-003**	**0.0420**	**0.1779**	**3.8000e-004**		**4.9000e-004**	**4.9000e-004**		**4.9000e-004**	**4.9000e-004**	**0.0000**	**31.7508**	**31.7508**	**1.2200e-003**	**0.0000**	**31.7765**

Mitigated Construction Off-Site

	ROG	NOx	CO	SO2	Fugitive PM10	Exhaust PM10	PM10 Total	Fugitive PM2.5	Exhaust PM2.5	PM2.5 Total	Bio- CO2	NBio- CO2	Total CO2	CH4	N2O	CO2e
Category	tons/yr										MT/yr					
Hauling	0.0000	0.0000	0.0000	0.0000	0.0000	0.0000	0.0000	0.0000	0.0000	0.0000	0.0000	0.0000	0.0000	0.0000	0.0000	0.0000
Vendor	0.0000	0.0000	0.0000	0.0000	0.0000	0.0000	0.0000	0.0000	0.0000	0.0000	0.0000	0.0000	0.0000	0.0000	0.0000	0.0000
Worker	0.0000	0.0000	0.0000	0.0000	0.0000	0.0000	0.0000	0.0000	0.0000	0.0000	0.0000	0.0000	0.0000	0.0000	0.0000	0.0000
Total	**0.0000**	**0.0000**	**0.0000**	**0.0000**	**0.0000**	**0.0000**	**0.0000**	**0.0000**	**0.0000**	**0.0000**	**0.0000**	**0.0000**	**0.0000**	**0.0000**	**0.0000**	**0.0000**

3.80 Year 11 Month 7 - 2030

Unmitigated Construction On-Site

	ROG	NOx	CO	SO2	Fugitive PM10	Exhaust PM10	PM10 Total	Fugitive PM2.5	Exhaust PM2.5	PM2.5 Total	Bio- CO2	NBio- CO2	Total CO2	CH4	N2O	CO2e
Category	tons/yr										MT/yr					
Off-Road	9.5100e-003	0.0405	0.0979	2.5000e-004		1.0300e-003	1.0300e-003		1.0300e-003	1.0300e-003	0.0000	21.3344	21.3344	7.6000e-004	0.0000	21.3505
Total	**9.5100e-003**	**0.0405**	**0.0979**	**2.5000e-004**		**1.0300e-003**	**1.0300e-003**		**1.0300e-003**	**1.0300e-003**	**0.0000**	**21.3344**	**21.3344**	**7.6000e-004**	**0.0000**	**21.3505**

Unmitigated Construction Off-Site

	ROG	NOx	CO	SO2	Fugitive PM10	Exhaust PM10	PM10 Total	Fugitive PM2.5	Exhaust PM2.5	PM2.5 Total	Bio- CO2	NBio- CO2	Total CO2	CH4	N2O	CO2e
Category	tons/yr										MT/yr					
Hauling	0.0000	0.0000	0.0000	0.0000	0.0000	0.0000	0.0000	0.0000	0.0000	0.0000	0.0000	0.0000	0.0000	0.0000	0.0000	0.0000
Vendor	0.0000	0.0000	0.0000	0.0000	0.0000	0.0000	0.0000	0.0000	0.0000	0.0000	0.0000	0.0000	0.0000	0.0000	0.0000	0.0000
Worker	0.0000	0.0000	0.0000	0.0000	0.0000	0.0000	0.0000	0.0000	0.0000	0.0000	0.0000	0.0000	0.0000	0.0000	0.0000	0.0000
Total	**0.0000**	**0.0000**	**0.0000**	**0.0000**	**0.0000**	**0.0000**	**0.0000**	**0.0000**	**0.0000**	**0.0000**	**0.0000**	**0.0000**	**0.0000**	**0.0000**	**0.0000**	**0.0000**

3.80 Year 11 Month 7 - 2030

Mitigated Construction On-Site

	ROG	NOx	CO	SO2	Fugitive PM10	Exhaust PM10	PM10 Total	Fugitive PM2.5	Exhaust PM2.5	PM2.5 Total	Bio- CO2	NBio- CO2	Total CO2	CH4	N2O	CO2e
Category	tons/yr										MT/yr					
Off-Road	2.8200e-003	0.0248	0.1261	2.5000e-004		3.3000e-004	3.3000e-004		3.3000e-004	3.3000e-004	0.0000	21.3344	21.3344	7.6000e-004	0.0000	21.3504
Total	**2.8200e-003**	**0.0248**	**0.1261**	**2.5000e-004**		**3.3000e-004**	**3.3000e-004**		**3.3000e-004**	**3.3000e-004**	**0.0000**	**21.3344**	**21.3344**	**7.6000e-004**	**0.0000**	**21.3504**

Mitigated Construction Off-Site

	ROG	NOx	CO	SO2	Fugitive PM10	Exhaust PM10	PM10 Total	Fugitive PM2.5	Exhaust PM2.5	PM2.5 Total	Bio- CO2	NBio- CO2	Total CO2	CH4	N2O	CO2e
Category	tons/yr										MT/yr					
Hauling	0.0000	0.0000	0.0000	0.0000	0.0000	0.0000	0.0000	0.0000	0.0000	0.0000	0.0000	0.0000	0.0000	0.0000	0.0000	0.0000
Vendor	0.0000	0.0000	0.0000	0.0000	0.0000	0.0000	0.0000	0.0000	0.0000	0.0000	0.0000	0.0000	0.0000	0.0000	0.0000	0.0000
Worker	0.0000	0.0000	0.0000	0.0000	0.0000	0.0000	0.0000	0.0000	0.0000	0.0000	0.0000	0.0000	0.0000	0.0000	0.0000	0.0000
Total	**0.0000**	**0.0000**	**0.0000**	**0.0000**	**0.0000**	**0.0000**	**0.0000**	**0.0000**	**0.0000**	**0.0000**	**0.0000**	**0.0000**	**0.0000**	**0.0000**	**0.0000**	**0.0000**

3.81 Year 11 Month 8 - 2030

Unmitigated Construction On-Site

	ROG	NOx	CO	SO2	Fugitive PM10	Exhaust PM10	PM10 Total	Fugitive PM2.5	Exhaust PM2.5	PM2.5 Total	Bio- CO2	NBio- CO2	Total CO2	CH4	N2O	CO2e
Category	tons/yr										MT/yr					
Off-Road	9.5100e-003	0.0405	0.0979	2.5000e-004		1.0300e-003	1.0300e-003		1.0300e-003	1.0300e-003	0.0000	21.3344	21.3344	7.6000e-004	0.0000	21.3505
Total	**9.5100e-003**	**0.0405**	**0.0979**	**2.5000e-004**		**1.0300e-003**	**1.0300e-003**		**1.0300e-003**	**1.0300e-003**	**0.0000**	**21.3344**	**21.3344**	**7.6000e-004**	**0.0000**	**21.3505**

Unmitigated Construction Off-Site

	ROG	NOx	CO	SO2	Fugitive PM10	Exhaust PM10	PM10 Total	Fugitive PM2.5	Exhaust PM2.5	PM2.5 Total	Bio- CO2	NBio- CO2	Total CO2	CH4	N2O	CO2e
Category	tons/yr										MT/yr					
Hauling	0.0000	0.0000	0.0000	0.0000	0.0000	0.0000	0.0000	0.0000	0.0000	0.0000	0.0000	0.0000	0.0000	0.0000	0.0000	0.0000
Vendor	0.0000	0.0000	0.0000	0.0000	0.0000	0.0000	0.0000	0.0000	0.0000	0.0000	0.0000	0.0000	0.0000	0.0000	0.0000	0.0000
Worker	0.0000	0.0000	0.0000	0.0000	0.0000	0.0000	0.0000	0.0000	0.0000	0.0000	0.0000	0.0000	0.0000	0.0000	0.0000	0.0000
Total	**0.0000**	**0.0000**	**0.0000**	**0.0000**	**0.0000**	**0.0000**	**0.0000**	**0.0000**	**0.0000**	**0.0000**	**0.0000**	**0.0000**	**0.0000**	**0.0000**	**0.0000**	**0.0000**

3.81 Year 11 Month 8 - 2030

Mitigated Construction On-Site

	ROG	NOx	CO	SO2	Fugitive PM10	Exhaust PM10	PM10 Total	Fugitive PM2.5	Exhaust PM2.5	PM2.5 Total	Bio- CO2	NBio- CO2	Total CO2	CH4	N2O	CO2e
Category	tons/yr										MT/yr					
Off-Road	2.8200e-003	0.0248	0.1261	2.5000e-004		3.3000e-004	3.3000e-004		3.3000e-004	3.3000e-004	0.0000	21.3344	21.3344	7.6000e-004	0.0000	21.3504
Total	**2.8200e-003**	**0.0248**	**0.1261**	**2.5000e-004**		**3.3000e-004**	**3.3000e-004**		**3.3000e-004**	**3.3000e-004**	**0.0000**	**21.3344**	**21.3344**	**7.6000e-004**	**0.0000**	**21.3504**

Mitigated Construction Off-Site

	ROG	NOx	CO	SO2	Fugitive PM10	Exhaust PM10	PM10 Total	Fugitive PM2.5	Exhaust PM2.5	PM2.5 Total	Bio- CO2	NBio- CO2	Total CO2	CH4	N2O	CO2e
Category	tons/yr										MT/yr					
Hauling	0.0000	0.0000	0.0000	0.0000	0.0000	0.0000	0.0000	0.0000	0.0000	0.0000	0.0000	0.0000	0.0000	0.0000	0.0000	0.0000
Vendor	0.0000	0.0000	0.0000	0.0000	0.0000	0.0000	0.0000	0.0000	0.0000	0.0000	0.0000	0.0000	0.0000	0.0000	0.0000	0.0000
Worker	0.0000	0.0000	0.0000	0.0000	0.0000	0.0000	0.0000	0.0000	0.0000	0.0000	0.0000	0.0000	0.0000	0.0000	0.0000	0.0000
Total	**0.0000**	**0.0000**	**0.0000**	**0.0000**	**0.0000**	**0.0000**	**0.0000**	**0.0000**	**0.0000**	**0.0000**	**0.0000**	**0.0000**	**0.0000**	**0.0000**	**0.0000**	**0.0000**

3.82 Year 11 Month 9 - 2030

Unmitigated Construction On-Site

	ROG	NOx	CO	SO2	Fugitive PM10	Exhaust PM10	PM10 Total	Fugitive PM2.5	Exhaust PM2.5	PM2.5 Total	Bio- CO2	NBio- CO2	Total CO2	CH4	N2O	CO2e
Category	tons/yr										MT/yr					
Off-Road	0.0570	0.2106	0.3538	1.3900e-003		7.7200e-003	7.7200e-003		7.7200e-003	7.7200e-003	0.0000	131.6195	131.6195	4.5500e-003	0.0000	131.7150
Total	**0.0570**	**0.2106**	**0.3538**	**1.3900e-003**		**7.7200e-003**	**7.7200e-003**		**7.7200e-003**	**7.7200e-003**	**0.0000**	**131.6195**	**131.6195**	**4.5500e-003**	**0.0000**	**131.7150**

Unmitigated Construction Off-Site

	ROG	NOx	CO	SO2	Fugitive PM10	Exhaust PM10	PM10 Total	Fugitive PM2.5	Exhaust PM2.5	PM2.5 Total	Bio- CO2	NBio- CO2	Total CO2	CH4	N2O	CO2e
Category	tons/yr										MT/yr					
Hauling	0.0000	0.0000	0.0000	0.0000	0.0000	0.0000	0.0000	0.0000	0.0000	0.0000	0.0000	0.0000	0.0000	0.0000	0.0000	0.0000
Vendor	0.0000	0.0000	0.0000	0.0000	0.0000	0.0000	0.0000	0.0000	0.0000	0.0000	0.0000	0.0000	0.0000	0.0000	0.0000	0.0000
Worker	0.0000	0.0000	0.0000	0.0000	0.0000	0.0000	0.0000	0.0000	0.0000	0.0000	0.0000	0.0000	0.0000	0.0000	0.0000	0.0000
Total	**0.0000**	**0.0000**	**0.0000**	**0.0000**	**0.0000**	**0.0000**	**0.0000**	**0.0000**	**0.0000**	**0.0000**	**0.0000**	**0.0000**	**0.0000**	**0.0000**	**0.0000**	**0.0000**

3.82 Year 11 Month 9 - 2030

Mitigated Construction On-Site

	ROG	NOx	CO	SO2	Fugitive PM10	Exhaust PM10	PM10 Total	Fugitive PM2.5	Exhaust PM2.5	PM2.5 Total	Bio- CO2	NBio- CO2	Total CO2	CH4	N2O	CO2e
Category	tons/yr										MT/yr					
Off-Road	0.0153	0.0664	0.6068	1.3900e-003		2.0400e-003	2.0400e-003		2.0400e-003	2.0400e-003	0.0000	131.6194	131.6194	4.5500e-003	0.0000	131.7149
Total	**0.0153**	**0.0664**	**0.6068**	**1.3900e-003**		**2.0400e-003**	**2.0400e-003**		**2.0400e-003**	**2.0400e-003**	**0.0000**	**131.6194**	**131.6194**	**4.5500e-003**	**0.0000**	**131.7149**

Mitigated Construction Off-Site

	ROG	NOx	CO	SO2	Fugitive PM10	Exhaust PM10	PM10 Total	Fugitive PM2.5	Exhaust PM2.5	PM2.5 Total	Bio- CO2	NBio- CO2	Total CO2	CH4	N2O	CO2e
Category	tons/yr										MT/yr					
Hauling	0.0000	0.0000	0.0000	0.0000	0.0000	0.0000	0.0000	0.0000	0.0000	0.0000	0.0000	0.0000	0.0000	0.0000	0.0000	0.0000
Vendor	0.0000	0.0000	0.0000	0.0000	0.0000	0.0000	0.0000	0.0000	0.0000	0.0000	0.0000	0.0000	0.0000	0.0000	0.0000	0.0000
Worker	0.0000	0.0000	0.0000	0.0000	0.0000	0.0000	0.0000	0.0000	0.0000	0.0000	0.0000	0.0000	0.0000	0.0000	0.0000	0.0000
Total	**0.0000**	**0.0000**	**0.0000**	**0.0000**	**0.0000**	**0.0000**	**0.0000**	**0.0000**	**0.0000**	**0.0000**	**0.0000**	**0.0000**	**0.0000**	**0.0000**	**0.0000**	**0.0000**

3.83 Year 11 Month 10 - 2030

Unmitigated Construction On-Site

	ROG	NOx	CO	SO2	Fugitive PM10	Exhaust PM10	PM10 Total	Fugitive PM2.5	Exhaust PM2.5	PM2.5 Total	Bio- CO2	NBio- CO2	Total CO2	CH4	N2O	CO2e
Category	tons/yr										MT/yr					
Off-Road	0.0616	0.2274	0.3821	1.5000e-003		8.3400e-003	8.3400e-003		8.3400e-003	8.3400e-003	0.0000	142.1491	142.1491	4.9100e-003	0.0000	142.2522
Total	**0.0616**	**0.2274**	**0.3821**	**1.5000e-003**		**8.3400e-003**	**8.3400e-003**		**8.3400e-003**	**8.3400e-003**	**0.0000**	**142.1491**	**142.1491**	**4.9100e-003**	**0.0000**	**142.2522**

Unmitigated Construction Off-Site

	ROG	NOx	CO	SO2	Fugitive PM10	Exhaust PM10	PM10 Total	Fugitive PM2.5	Exhaust PM2.5	PM2.5 Total	Bio- CO2	NBio- CO2	Total CO2	CH4	N2O	CO2e
Category	tons/yr										MT/yr					
Hauling	0.0000	0.0000	0.0000	0.0000	0.0000	0.0000	0.0000	0.0000	0.0000	0.0000	0.0000	0.0000	0.0000	0.0000	0.0000	0.0000
Vendor	0.0000	0.0000	0.0000	0.0000	0.0000	0.0000	0.0000	0.0000	0.0000	0.0000	0.0000	0.0000	0.0000	0.0000	0.0000	0.0000
Worker	0.0000	0.0000	0.0000	0.0000	0.0000	0.0000	0.0000	0.0000	0.0000	0.0000	0.0000	0.0000	0.0000	0.0000	0.0000	0.0000
Total	**0.0000**	**0.0000**	**0.0000**	**0.0000**	**0.0000**	**0.0000**	**0.0000**	**0.0000**	**0.0000**	**0.0000**	**0.0000**	**0.0000**	**0.0000**	**0.0000**	**0.0000**	**0.0000**

3.83 Year 11 Month 10 - 2030

Mitigated Construction On-Site

	ROG	NOx	CO	SO2	Fugitive PM10	Exhaust PM10	PM10 Total	Fugitive PM2.5	Exhaust PM2.5	PM2.5 Total	Bio- CO2	NBio- CO2	Total CO2	CH4	N2O	CO2e
Category	tons/yr										MT/yr					
Off-Road	0.0165	0.0717	0.6553	1.5000e-003		2.2100e-003	2.2100e-003		2.2100e-003	2.2100e-003	0.0000	142.1489	142.1489	4.9100e-003	0.0000	142.2520
Total	**0.0165**	**0.0717**	**0.6553**	**1.5000e-003**		**2.2100e-003**	**2.2100e-003**		**2.2100e-003**	**2.2100e-003**	**0.0000**	**142.1489**	**142.1489**	**4.9100e-003**	**0.0000**	**142.2520**

Mitigated Construction Off-Site

	ROG	NOx	CO	SO2	Fugitive PM10	Exhaust PM10	PM10 Total	Fugitive PM2.5	Exhaust PM2.5	PM2.5 Total	Bio- CO2	NBio- CO2	Total CO2	CH4	N2O	CO2e
Category	tons/yr										MT/yr					
Hauling	0.0000	0.0000	0.0000	0.0000	0.0000	0.0000	0.0000	0.0000	0.0000	0.0000	0.0000	0.0000	0.0000	0.0000	0.0000	0.0000
Vendor	0.0000	0.0000	0.0000	0.0000	0.0000	0.0000	0.0000	0.0000	0.0000	0.0000	0.0000	0.0000	0.0000	0.0000	0.0000	0.0000
Worker	0.0000	0.0000	0.0000	0.0000	0.0000	0.0000	0.0000	0.0000	0.0000	0.0000	0.0000	0.0000	0.0000	0.0000	0.0000	0.0000
Total	**0.0000**	**0.0000**	**0.0000**	**0.0000**	**0.0000**	**0.0000**	**0.0000**	**0.0000**	**0.0000**	**0.0000**	**0.0000**	**0.0000**	**0.0000**	**0.0000**	**0.0000**	**0.0000**

3.84 Year 11 Month 11 - 2030

Unmitigated Construction Off-Site

	ROG	NOx	CO	SO2	Fugitive PM10	Exhaust PM10	PM10 Total	Fugitive PM2.5	Exhaust PM2.5	PM2.5 Total	Bio- CO2	NBio- CO2	Total CO2	CH4	N2O	CO2e
Category	tons/yr										MT/yr					
Hauling					0.0000	0.0000	0.0000	0.0000	0.0000	0.0000	0.0000	0.0000	0.0000	0.0000	0.0000	0.0000
Vendor					0.0000	0.0000	0.0000	0.0000	0.0000	0.0000	0.0000	0.0000	0.0000	0.0000	0.0000	0.0000
Worker					0.0000	0.0000	0.0000	0.0000	0.0000	0.0000	0.0000	0.0000	0.0000	0.0000	0.0000	0.0000
Total					**0.0000**	**0.0000**	**0.0000**	**0.0000**	**0.0000**	**0.0000**	**0.0000**	**0.0000**	**0.0000**	**0.0000**	**0.0000**	**0.0000**

Mitigated Construction Off-Site

	ROG	NOx	CO	SO2	Fugitive PM10	Exhaust PM10	PM10 Total	Fugitive PM2.5	Exhaust PM2.5	PM2.5 Total	Bio- CO2	NBio- CO2	Total CO2	CH4	N2O	CO2e
Category	tons/yr										MT/yr					
Hauling					0.0000	0.0000	0.0000	0.0000	0.0000	0.0000	0.0000	0.0000	0.0000	0.0000	0.0000	0.0000
Vendor					0.0000	0.0000	0.0000	0.0000	0.0000	0.0000	0.0000	0.0000	0.0000	0.0000	0.0000	0.0000
Worker					0.0000	0.0000	0.0000	0.0000	0.0000	0.0000	0.0000	0.0000	0.0000	0.0000	0.0000	0.0000
Total					**0.0000**	**0.0000**	**0.0000**	**0.0000**	**0.0000**	**0.0000**	**0.0000**	**0.0000**	**0.0000**	**0.0000**	**0.0000**	**0.0000**

3.85 Year 11 Month 12 - 2030

Unmitigated Construction Off-Site

	ROG	NOx	CO	SO2	Fugitive PM10	Exhaust PM10	PM10 Total	Fugitive PM2.5	Exhaust PM2.5	PM2.5 Total	Bio- CO2	NBio- CO2	Total CO2	CH4	N2O	CO2e
Category	tons/yr										MT/yr					
Hauling					0.0000	0.0000	0.0000	0.0000	0.0000	0.0000	0.0000	0.0000	0.0000	0.0000	0.0000	0.0000
Vendor					0.0000	0.0000	0.0000	0.0000	0.0000	0.0000	0.0000	0.0000	0.0000	0.0000	0.0000	0.0000
Worker					0.0000	0.0000	0.0000	0.0000	0.0000	0.0000	0.0000	0.0000	0.0000	0.0000	0.0000	0.0000
Total					**0.0000**	**0.0000**	**0.0000**	**0.0000**	**0.0000**	**0.0000**	**0.0000**	**0.0000**	**0.0000**	**0.0000**	**0.0000**	**0.0000**

Mitigated Construction Off-Site

	ROG	NOx	CO	SO2	Fugitive PM10	Exhaust PM10	PM10 Total	Fugitive PM2.5	Exhaust PM2.5	PM2.5 Total	Bio- CO2	NBio- CO2	Total CO2	CH4	N2O	CO2e
Category	tons/yr										MT/yr					
Hauling					0.0000	0.0000	0.0000	0.0000	0.0000	0.0000	0.0000	0.0000	0.0000	0.0000	0.0000	0.0000
Vendor					0.0000	0.0000	0.0000	0.0000	0.0000	0.0000	0.0000	0.0000	0.0000	0.0000	0.0000	0.0000
Worker					0.0000	0.0000	0.0000	0.0000	0.0000	0.0000	0.0000	0.0000	0.0000	0.0000	0.0000	0.0000
Total					**0.0000**	**0.0000**	**0.0000**	**0.0000**	**0.0000**	**0.0000**	**0.0000**	**0.0000**	**0.0000**	**0.0000**	**0.0000**	**0.0000**

4.0 Operational Detail - Mobile

AERA - Santa Barbara - Cat Canyon Construction Equipment Emission Calculations Years 12 thru 18

Santa Barbara-North of Santa Ynez County, Annual

1.0 Project Characteristics

1.1 Land Usage

Land Uses	Size	Metric	Lot Acreage	Floor Surface Area	Population
User Defined Industrial	2,100.00	User Defined Unit	2,100.00	0.00	0

1.2 Other Project Characteristics

Urbanization	Rural	**Wind Speed (m/s)**	3.1	**Precipitation Freq (Days)**	37
Climate Zone	4			**Operational Year**	2035
Utility Company	Pacific Gas & Electric Company				
CO2 Intensity (lb/MWhr)	641.35	**CH4 Intensity (lb/MWhr)**	0.029	**N2O Intensity (lb/MWhr)**	0.006

1.3 User Entered Comments & Non-Default Data

Project Characteristics -

Land Use - The project will be located in the East Cat Canyon oil field on approximately 2,100 acres.

Construction Phase - Anticipated Construction Schedule Provided by the Project Applicant.

Off-road Equipment - Units and Hours/day provided by Project Applicant. HP were adjusted whenever data was available for the size of the equipment provided by the applicant.

Off-road Equipment - Units and Hours/day provided by Project Applicant. HP were adjusted whenever data was available for the size of the equipment provided by the applicant.

Off-road Equipment - Units and Hours/day provided by Project Applicant. HP were adjusted whenever data was available for the size of the equipment provided by the applicant.

Off-road Equipment - Units and Hours/day provided by Project Applicant. HP were adjusted whenever data was available for the size of the equipment provided by the applicant.

Off-road Equipment - Units and Hours/day provided by Project Applicant. HP were adjusted whenever data was available for the size of the equipment provided by the applicant.

Off-road Equipment - Units and Hours/day provided by Project Applicant. HP were adjusted whenever data was available for the size of the equipment provided by the applicant.
Off-road Equipment - Units and Hours/day provided by Project Applicant. HP were adjusted whenever data was available for the size of the equipment provided by the applicant.
Off-road Equipment - Units and Hours/day provided by Project Applicant. HP were adjusted whenever data was available for the size of the equipment provided by the applicant.
Off-road Equipment - Units and Hours/day provided by Project Applicant. HP were adjusted whenever data was available for the size of the equipment provided by the applicant.
Off-road Equipment - Units and Hours/day provided by Project Applicant. HP were adjusted whenever data was available for the size of the equipment provided by the applicant.
Off-road Equipment - Units and Hours/day provided by Project Applicant. HP were adjusted whenever data was available for the size of the equipment provided by the applicant.
Off-road Equipment - Units and Hours/day provided by Project Applicant. HP were adjusted whenever data was available for the size of the equipment provided by the applicant.
Off-road Equipment - Units and Hours/day provided by Project Applicant. HP were adjusted whenever data was available for the size of the equipment provided by the applicant.
Off-road Equipment - Units and Hours/day provided by Project Applicant. HP were adjusted whenever data was available for the size of the equipment provided by the applicant.
Off-road Equipment - Units and Hours/day provided by Project Applicant. HP were adjusted whenever data was available for the size of the equipment provided by the applicant.
Off-road Equipment - Units and Hours/day provided by Project Applicant. HP were adjusted whenever data was available for the size of the equipment provided by the applicant.
Off-road Equipment - Units and Hours/day provided by Project Applicant. HP were adjusted whenever data was available for the size of the equipment provided by the applicant.
Off-road Equipment - Units and Hours/day provided by Project Applicant. HP were adjusted whenever data was available for the size of the equipment provided by the applicant.
Off-road Equipment - Units and Hours/day provided by Project Applicant. HP were adjusted whenever data was available for the size of the equipment provided by the applicant.
Off-road Equipment - Units and Hours/day provided by Project Applicant. HP were adjusted whenever data was available for the size of the equipment provided by the applicant.
Off-road Equipment - Units and Hours/day provided by Project Applicant. HP were adjusted whenever data was available for the size of the equipment provided by the applicant.
Off-road Equipment - Units and Hours/day provided by Project Applicant. HP were adjusted whenever data was available for the size of the equipment provided by the applicant.
Off-road Equipment - Units and Hours/day provided by Project Applicant. HP were adjusted whenever data was available for the size of the equipment provided by the applicant.
Off-road Equipment - Units and Hours/day provided by Project Applicant. HP were adjusted whenever data was available for the size of the equipment provided by the applicant.
Off-road Equipment - Units and Hours/day provided by Project Applicant. HP were adjusted whenever data was available for the size of the equipment provided

by the applicant.
Off-road Equipment - Units and Hours/day provided by Project Applicant. HP were adjusted whenever data was available for the size of the equipment provided by the applicant.

Off-road Equipment - Units and Hours/day provided by Project Applicant. HP were adjusted whenever data was available for the size of the equipment provided by the applicant.

Off-road Equipment - Units and Hours/day provided by Project Applicant. HP were adjusted whenever data was available for the size of the equipment provided by the applicant.

Off-road Equipment - Units and Hours/day provided by Project Applicant. HP were adjusted whenever data was available for the size of the equipment provided by the applicant.

Off-road Equipment - Units and Hours/day provided by Project Applicant. HP were adjusted whenever data was available for the size of the equipment provided by the applicant.

Off-road Equipment - Units and Hours/day provided by Project Applicant. HP were adjusted whenever data was available for the size of the equipment provided by the applicant.

Off-road Equipment - Units and Hours/day provided by Project Applicant. HP were adjusted whenever data was available for the size of the equipment provided by the applicant.

Off-road Equipment - Units and Hours/day provided by Project Applicant. HP were adjusted whenever data was available for the size of the equipment provided by the applicant.

Off-road Equipment - Units and Hours/day provided by Project Applicant. HP were adjusted whenever data was available for the size of the equipment provided by the applicant.

Off-road Equipment - Units and Hours/day provided by Project Applicant. HP were adjusted whenever data was available for the size of the equipment provided by the applicant.

Off-road Equipment - Units and Hours/day provided by Project Applicant. HP were adjusted whenever data was available for the size of the equipment provided by the applicant.

Off-road Equipment - Units and Hours/day provided by Project Applicant. HP were adjusted whenever data was available for the size of the equipment provided by the applicant.

Off-road Equipment - Units and Hours/day provided by Project Applicant. HP were adjusted whenever data was available for the size of the equipment provided by the applicant.

Off-road Equipment - Units and Hours/day provided by Project Applicant. HP were adjusted whenever data was available for the size of the equipment provided by the applicant.

Off-road Equipment - Units and Hours/day provided by Project Applicant. HP were adjusted whenever data was available for the size of the equipment provided by the applicant.

Off-road Equipment - Units and Hours/day provided by Project Applicant. HP were adjusted whenever data was available for the size of the equipment provided by the applicant.

Off-road Equipment - Units and Hours/day provided by Project Applicant. HP were adjusted whenever data was available for the size of the equipment provided by the applicant.

Off-road Equipment - Units and Hours/day provided by Project Applicant. HP were adjusted whenever data was available for the size of the equipment provided by the applicant.

Off-road Equipment - Units and Hours/day provided by Project Applicant. HP were adjusted whenever data was available for the size of the equipment provided by the applicant.

Off-road Equipment - Units and Hours/day provided by Project Applicant. HP were adjusted whenever data was available for the size of the equipment provided by the applicant.

Off-road Equipment - Units and Hours/day provided by Project Applicant. HP were adjusted whenever data was available for the size of the equipment provided by the applicant.

Off-road Equipment - Units and Hours/day provided by Project Applicant. HP were adjusted whenever data was available for the size of the equipment provided by the applicant.

Off-road Equipment - Units and Hours/day provided by Project Applicant. HP were adjusted whenever data was available for the size of the equipment provided by the applicant.

Off-road Equipment - Units and Hours/day provided by Project Applicant. HP were adjusted whenever data was available for the size of the equipment provided by the applicant.

Off-road Equipment - Units and Hours/day provided by Project Applicant. HP were adjusted whenever data was available for the size of the equipment provided by the applicant.

Off-road Equipment - Units and Hours/day provided by Project Applicant. HP were adjusted whenever data was available for the size of the equipment provided by the applicant.

Off-road Equipment - Units and Hours/day provided by Project Applicant. HP were adjusted whenever data was available for the size of the equipment provided by the applicant.

Off-road Equipment - Units and Hours/day provided by Project Applicant. HP were adjusted whenever data was available for the size of the equipment provided by the applicant.

Off-road Equipment - Units and Hours/day provided by Project Applicant. HP were adjusted whenever data was available for the size of the equipment provided by the applicant.

Off-road Equipment - Units and Hours/day provided by Project Applicant. HP were adjusted whenever data was available for the size of the equipment provided by the applicant.

Off-road Equipment - Units and Hours/day provided by Project Applicant. HP were adjusted whenever data was available for the size of the equipment provided by the applicant.

Off-road Equipment - Units and Hours/day provided by Project Applicant. HP were adjusted whenever data was available for the size of the equipment provided by the applicant.

Off-road Equipment - Units and Hours/day provided by Project Applicant. HP were adjusted whenever data was available for the size of the equipment provided by the applicant.

Off-road Equipment - Units and Hours/day provided by Project Applicant. HP were adjusted whenever data was available for the size of the equipment provided by the applicant.

Off-road Equipment - Units and Hours/day provided by Project Applicant. HP were adjusted whenever data was available for the size of the equipment provided by the applicant.

Off-road Equipment - Units and Hours/day provided by Project Applicant. HP were adjusted whenever data was available for the size of the equipment provided by the applicant.

Off-road Equipment - Units and Hours/day provided by Project Applicant. HP were adjusted whenever data was available for the size of the equipment provided by the applicant.

Off-road Equipment - Units and Hours/day provided by Project Applicant. HP were adjusted whenever data was available for the size of the equipment provided by the applicant.

Off-road Equipment - Units and Hours/day provided by Project Applicant. HP were adjusted whenever data was available for the size of the equipment provided by the applicant.

Off-road Equipment - Units and Hours/day provided by Project Applicant. HP were adjusted whenever data was available for the size of the equipment provided by the applicant.

Off-road Equipment - Units and Hours/day provided by Project Applicant. HP were adjusted whenever data was available for the size of the equipment provided by the applicant.

Off-road Equipment - Units and Hours/day provided by Project Applicant. HP were adjusted whenever data was available for the size of the equipment provided by the applicant.

Off-road Equipment - Units and Hours/day provided by Project Applicant. HP were adjusted whenever data was available for the size of the equipment provided by the applicant.

Off-road Equipment - Units and Hours/day provided by Project Applicant. HP were adjusted whenever data was available for the size of the equipment provided by the applicant.

Off-road Equipment - Units and Hours/day provided by Project Applicant. HP were adjusted whenever data was available for the size of the equipment provided by the applicant.

Off-road Equipment - Units and Hours/day provided by Project Applicant. HP were adjusted whenever data was available for the size of the equipment provided by the applicant.

Off-road Equipment - Units and Hours/day provided by Project Applicant. HP were adjusted whenever data was available for the size of the equipment provided by the applicant.

Off-road Equipment - Units and Hours/day provided by Project Applicant. HP were adjusted whenever data was available for the size of the equipment provided by the applicant.

Off-road Equipment - Units and Hours/day provided by Project Applicant. HP were adjusted whenever data was available for the size of the equipment provided by the applicant.

Off-road Equipment - Units and Hours/day provided by Project Applicant. HP were adjusted whenever data was available for the size of the equipment provided by the applicant.

Off-road Equipment - Units and Hours/day provided by Project Applicant. HP were adjusted whenever data was available for the size of the equipment provided by the applicant.

Off-road Equipment - Units and Hours/day provided by Project Applicant. HP were adjusted whenever data was available for the size of the equipment provided by the applicant.

Off-road Equipment - Units and Hours/day provided by Project Applicant. HP were adjusted whenever data was available for the size of the equipment provided by the applicant.

Off-road Equipment - Units and Hours/day provided by Project Applicant. HP were adjusted whenever data was available for the size of the equipment provided by the applicant.

Off-road Equipment - Units and Hours/day provided by Project Applicant. HP were adjusted whenever data was available for the size of the equipment provided by the applicant.

Off-road Equipment - Units and Hours/day provided by Project Applicant. HP were adjusted whenever data was available for the size of the equipment provided by the applicant.

Off-road Equipment - Units and Hours/day provided by Project Applicant. HP were adjusted whenever data was available for the size of the equipment provided by the applicant.

Off-road Equipment - Units and Hours/day provided by Project Applicant. HP were adjusted whenever data was available for the size of the equipment provided

by the applicant.
Off-road Equipment - Units and Hours/day provided by Project Applicant. HP were adjusted whenever data was available for the size of the equipment provided by the applicant.

Trips and VMT - Employee Trips are included in the offsite calculations.

On-road Fugitive Dust -

Vehicle Trips - Construction Run Only

Vechicle Emission Factors -

Vechicle Emission Factors -

Vechicle Emission Factors -

Road Dust -

Consumer Products - Construction Run Only

Landscape Equipment - Construction Run Only

Construction Off-road Equipment Mitigation - Using Tier 4 Engines to Mitigate Construction Emissions

Table Name	Column Name	Default Value	New Value
tblConstEquipMitigation	NumberOfEquipmentMitigated	0.00	56.00
tblConstEquipMitigation	NumberOfEquipmentMitigated	0.00	82.00
tblConstEquipMitigation	NumberOfEquipmentMitigated	0.00	12.00
tblConstEquipMitigation	NumberOfEquipmentMitigated	0.00	162.00
tblConstEquipMitigation	NumberOfEquipmentMitigated	0.00	10.00
tblConstEquipMitigation	NumberOfEquipmentMitigated	0.00	8.00
tblConstEquipMitigation	NumberOfEquipmentMitigated	0.00	56.00
tblConstEquipMitigation	Tier	No Change	Tier 4 Final
tblConstEquipMitigation	Tier	No Change	Tier 4 Final
tblConstEquipMitigation	Tier	No Change	Tier 4 Final
tblConstEquipMitigation	Tier	No Change	Tier 4 Final
tblConstEquipMitigation	Tier	No Change	Tier 4 Final
tblConstEquipMitigation	Tier	No Change	Tier 4 Final
tblConstEquipMitigation	Tier	No Change	Tier 4 Final

tblConstructionPhase	NumDays	155,000.00	27.00
tblConstructionPhase	NumDays	155,000.00	27.00
tblConstructionPhase	NumDays	155,000.00	25.00
tblConstructionPhase	NumDays	155,000.00	27.00
tblConstructionPhase	NumDays	155,000.00	27.00
tblConstructionPhase	NumDays	155,000.00	24.00
tblConstructionPhase	NumDays	155,000.00	27.00
tblConstructionPhase	NumDays	155,000.00	26.00
tblConstructionPhase	NumDays	155,000.00	26.00
tblConstructionPhase	NumDays	155,000.00	26.00
tblConstructionPhase	NumDays	155,000.00	27.00
tblConstructionPhase	NumDays	155,000.00	24.00
tblConstructionPhase	NumDays	155,000.00	26.00
tblConstructionPhase	NumDays	155,000.00	26.00
tblConstructionPhase	NumDays	155,000.00	26.00
tblConstructionPhase	NumDays	155,000.00	26.00
tblConstructionPhase	NumDays	155,000.00	27.00
tblConstructionPhase	NumDays	155,000.00	26.00
tblConstructionPhase	NumDays	155,000.00	24.00
tblConstructionPhase	NumDays	155,000.00	27.00
tblConstructionPhase	NumDays	155,000.00	26.00
tblConstructionPhase	NumDays	155,000.00	26.00
tblConstructionPhase	NumDays	155,000.00	26.00
tblConstructionPhase	NumDays	155,000.00	26.00
tblConstructionPhase	NumDays	155,000.00	26.00
tblConstructionPhase	NumDays	155,000.00	27.00
tblConstructionPhase	NumDays	155,000.00	26.00
tblConstructionPhase	NumDays	155,000.00	26.00

tblConstructionPhase	NumDays	155,000.00	26.00
tblConstructionPhase	NumDays	155,000.00	27.00
tblConstructionPhase	NumDays	155,000.00	26.00
tblConstructionPhase	NumDays	155,000.00	24.00
tblConstructionPhase	NumDays	155,000.00	27.00
tblConstructionPhase	NumDays	155,000.00	26.00
tblConstructionPhase	NumDays	155,000.00	25.00
tblConstructionPhase	NumDays	155,000.00	27.00
tblConstructionPhase	NumDays	155,000.00	26.00
tblConstructionPhase	NumDays	155,000.00	26.00
tblConstructionPhase	NumDays	155,000.00	27.00
tblConstructionPhase	NumDays	155,000.00	26.00
tblConstructionPhase	NumDays	155,000.00	26.00
tblConstructionPhase	NumDays	155,000.00	26.00
tblConstructionPhase	NumDays	155,000.00	26.00
tblConstructionPhase	NumDays	155,000.00	26.00
tblConstructionPhase	NumDays	155,000.00	27.00
tblConstructionPhase	NumDays	155,000.00	27.00
tblConstructionPhase	NumDays	155,000.00	24.00
tblConstructionPhase	NumDays	155,000.00	27.00
tblConstructionPhase	NumDays	155,000.00	25.00
tblConstructionPhase	NumDays	155,000.00	27.00
tblConstructionPhase	NumDays	155,000.00	26.00
tblConstructionPhase	NumDays	155,000.00	26.00
tblConstructionPhase	NumDays	155,000.00	27.00
tblConstructionPhase	NumDays	155,000.00	25.00
tblConstructionPhase	NumDays	155,000.00	27.00
tblConstructionPhase	NumDays	155,000.00	26.00
tblConstructionPhase	NumDays	155,000.00	25.00

tblConstructionPhase	NumDays	155,000.00	26.00
tblConstructionPhase	NumDays	155,000.00	27.00
tblConstructionPhase	NumDays	155,000.00	24.00
tblConstructionPhase	NumDays	155,000.00	26.00
tblConstructionPhase	NumDays	155,000.00	26.00
tblConstructionPhase	NumDays	155,000.00	27.00
tblConstructionPhase	NumDays	155,000.00	25.00
tblConstructionPhase	NumDays	155,000.00	27.00
tblConstructionPhase	NumDays	155,000.00	26.00
tblConstructionPhase	NumDays	155,000.00	26.00
tblConstructionPhase	NumDays	155,000.00	27.00
tblConstructionPhase	NumDays	155,000.00	27.00
tblConstructionPhase	NumDays	155,000.00	25.00
tblConstructionPhase	NumDays	155,000.00	27.00
tblConstructionPhase	NumDays	155,000.00	27.00
tblConstructionPhase	NumDays	155,000.00	24.00
tblConstructionPhase	NumDays	155,000.00	26.00
tblConstructionPhase	NumDays	155,000.00	26.00
tblConstructionPhase	NumDays	155,000.00	26.00
tblConstructionPhase	NumDays	155,000.00	26.00
tblConstructionPhase	NumDays	155,000.00	27.00
tblConstructionPhase	NumDays	155,000.00	26.00
tblConstructionPhase	NumDays	155,000.00	26.00
tblConstructionPhase	NumDays	155,000.00	26.00
tblConstructionPhase	NumDays	155,000.00	27.00
tblConstructionPhase	NumDays	155,000.00	25.00
tblConstructionPhase	NumDays	155,000.00	27.00
tblConstructionPhase	NumDays	155,000.00	26.00

tblConstructionPhase	NumDaysWeek	5.00	6.00
tblConstructionPhase	NumDaysWeek	5.00	6.00
tblConstructionPhase	NumDaysWeek	5.00	6.00
tblConstructionPhase	NumDaysWeek	5.00	6.00
tblConstructionPhase	NumDaysWeek	5.00	6.00
tblConstructionPhase	NumDaysWeek	5.00	6.00
tblConstructionPhase	NumDaysWeek	5.00	6.00
tblConstructionPhase	NumDaysWeek	5.00	6.00
tblConstructionPhase	NumDaysWeek	5.00	6.00
tblConstructionPhase	NumDaysWeek	5.00	6.00
tblConstructionPhase	NumDaysWeek	5.00	6.00
tblConstructionPhase	NumDaysWeek	5.00	6.00
tblConstructionPhase	NumDaysWeek	5.00	6.00
tblConstructionPhase	NumDaysWeek	5.00	6.00
tblConstructionPhase	NumDaysWeek	5.00	6.00
tblConstructionPhase	NumDaysWeek	5.00	6.00
tblConstructionPhase	NumDaysWeek	5.00	6.00
tblConstructionPhase	NumDaysWeek	5.00	6.00
tblConstructionPhase	NumDaysWeek	5.00	6.00
tblConstructionPhase	NumDaysWeek	5.00	6.00
tblConstructionPhase	NumDaysWeek	5.00	6.00
tblConstructionPhase	NumDaysWeek	5.00	6.00
tblConstructionPhase	NumDaysWeek	5.00	6.00
tblConstructionPhase	NumDaysWeek	5.00	6.00
tblConstructionPhase	NumDaysWeek	5.00	6.00
tblConstructionPhase	NumDaysWeek	5.00	6.00

tblConstructionPhase	NumDaysWeek	5.00	6.00
tblConstructionPhase	NumDaysWeek	5.00	6.00
tblConstructionPhase	NumDaysWeek	5.00	6.00
tblConstructionPhase	NumDaysWeek	5.00	6.00
tblConstructionPhase	NumDaysWeek	5.00	6.00
tblConstructionPhase	NumDaysWeek	5.00	6.00
tblConstructionPhase	NumDaysWeek	5.00	6.00
tblConstructionPhase	NumDaysWeek	5.00	6.00
tblConstructionPhase	NumDaysWeek	5.00	6.00
tblConstructionPhase	NumDaysWeek	5.00	6.00
tblConstructionPhase	NumDaysWeek	5.00	6.00
tblConstructionPhase	NumDaysWeek	5.00	6.00
tblConstructionPhase	NumDaysWeek	5.00	6.00
tblConstructionPhase	NumDaysWeek	5.00	6.00
tblConstructionPhase	NumDaysWeek	5.00	6.00
tblConstructionPhase	NumDaysWeek	5.00	6.00
tblConstructionPhase	NumDaysWeek	5.00	6.00
tblConstructionPhase	NumDaysWeek	5.00	6.00
tblConstructionPhase	NumDaysWeek	5.00	6.00
tblConstructionPhase	NumDaysWeek	5.00	6.00
tblConstructionPhase	NumDaysWeek	5.00	6.00
tblConstructionPhase	NumDaysWeek	5.00	6.00
tblConstructionPhase	NumDaysWeek	5.00	6.00
tblConstructionPhase	NumDaysWeek	5.00	6.00
tblConstructionPhase	NumDaysWeek	5.00	6.00
tblConstructionPhase	NumDaysWeek	5.00	6.00

tblConstructionPhase	NumDaysWeek	5.00	6.00
tblConstructionPhase	NumDaysWeek	5.00	6.00
tblConstructionPhase	NumDaysWeek	5.00	6.00
tblConstructionPhase	NumDaysWeek	5.00	6.00
tblConstructionPhase	NumDaysWeek	5.00	6.00
tblConstructionPhase	NumDaysWeek	5.00	6.00
tblConstructionPhase	NumDaysWeek	5.00	6.00
tblConstructionPhase	NumDaysWeek	5.00	6.00
tblConstructionPhase	NumDaysWeek	5.00	6.00
tblConstructionPhase	NumDaysWeek	5.00	6.00
tblConstructionPhase	NumDaysWeek	5.00	6.00
tblConstructionPhase	NumDaysWeek	5.00	6.00
tblConstructionPhase	NumDaysWeek	5.00	6.00
tblConstructionPhase	NumDaysWeek	5.00	6.00
tblConstructionPhase	NumDaysWeek	5.00	6.00
tblConstructionPhase	NumDaysWeek	5.00	6.00
tblConstructionPhase	NumDaysWeek	5.00	6.00
tblConstructionPhase	NumDaysWeek	5.00	6.00
tblConstructionPhase	NumDaysWeek	5.00	6.00
tblConstructionPhase	NumDaysWeek	5.00	6.00
tblConstructionPhase	NumDaysWeek	5.00	6.00
tblConstructionPhase	NumDaysWeek	5.00	6.00
tblConstructionPhase	NumDaysWeek	5.00	6.00
tblConstructionPhase	NumDaysWeek	5.00	6.00
tblConstructionPhase	NumDaysWeek	5.00	6.00
tblConstructionPhase	NumDaysWeek	5.00	6.00

tblConstructionPhase	PhaseEndDate	3/29/2036	3/31/2036
tblConstructionPhase	PhaseStartDate	11/30/2031	12/1/2031
tblConstructionPhase	PhaseStartDate	2/29/2032	3/1/2032
tblConstructionPhase	PhaseStartDate	10/31/2032	11/1/2032
tblConstructionPhase	PhaseStartDate	7/31/2033	8/1/2033
tblConstructionPhase	PhaseStartDate	4/30/2034	5/1/2034
tblConstructionPhase	PhaseStartDate	12/31/2034	1/1/2035
tblConstructionPhase	PhaseStartDate	9/30/2035	10/1/2035
tblConstructionPhase	PhaseStartDate	2/29/2036	3/1/2036
tblConstructionPhase	PhaseStartDate	8/31/2036	9/1/2036
tblConstructionPhase	PhaseStartDate	11/30/2036	12/1/2036
tblConstructionPhase	PhaseStartDate	5/31/2037	6/1/2037
tblConstructionPhase	PhaseStartDate	8/31/2031	9/1/2031
tblLandUse	LotAcreage	0.00	2,100.00
tblOffRoadEquipment	HorsePower	97.00	67.00
tblOffRoadEquipment	HorsePower	97.00	67.00
tblOffRoadEquipment	HorsePower	97.00	67.00
tblOffRoadEquipment	HorsePower	97.00	67.00
tblOffRoadEquipment	HorsePower	97.00	67.00
tblOffRoadEquipment	HorsePower	97.00	67.00
tblOffRoadEquipment	HorsePower	97.00	67.00
tblOffRoadEquipment	HorsePower	97.00	67.00
tblOffRoadEquipment	HorsePower	46.00	42.00
tblOffRoadEquipment	HorsePower	46.00	42.00
tblOffRoadEquipment	HorsePower	46.00	42.00
tblOffRoadEquipment	HorsePower	46.00	42.00
tblOffRoadEquipment	HorsePower	46.00	42.00
tblOffRoadEquipment	HorsePower	46.00	42.00

tblOffRoadEquipment	HorsePower	46.00	42.00
tblOffRoadEquipment	HorsePower	46.00	42.00
tblOffRoadEquipment	HorsePower	46.00	42.00
tblOffRoadEquipment	HorsePower	46.00	42.00
tblOffRoadEquipment	HorsePower	46.00	42.00
tblOffRoadEquipment	HorsePower	46.00	42.00
tblOffRoadEquipment	HorsePower	46.00	42.00
tblOffRoadEquipment	HorsePower	46.00	42.00
tblOffRoadEquipment	HorsePower	46.00	42.00
tblOffRoadEquipment	HorsePower	46.00	42.00
tblOffRoadEquipment	HorsePower	46.00	42.00
tblOffRoadEquipment	HorsePower	46.00	42.00
tblOffRoadEquipment	HorsePower	46.00	42.00
tblOffRoadEquipment	HorsePower	46.00	42.00
tblOffRoadEquipment	HorsePower	46.00	42.00
tblOffRoadEquipment	HorsePower	46.00	42.00
tblOffRoadEquipment	HorsePower	46.00	42.00
tblOffRoadEquipment	HorsePower	46.00	42.00
tblOffRoadEquipment	HorsePower	46.00	42.00
tblOffRoadEquipment	HorsePower	46.00	42.00
tblOffRoadEquipment	HorsePower	46.00	42.00
tblOffRoadEquipment	HorsePower	208.00	232.00
tblOffRoadEquipment	HorsePower	208.00	232.00
tblOffRoadEquipment	HorsePower	208.00	585.00
tblOffRoadEquipment	HorsePower	208.00	207.00
tblOffRoadEquipment	HorsePower	208.00	232.00
tblOffRoadEquipment	HorsePower	208.00	232.00

tblOffRoadEquipment	HorsePower	208.00	232.00
tblOffRoadEquipment	HorsePower	208.00	232.00
tblOffRoadEquipment	HorsePower	208.00	232.00
tblOffRoadEquipment	HorsePower	208.00	232.00
tblOffRoadEquipment	HorsePower	208.00	585.00
tblOffRoadEquipment	HorsePower	208.00	207.00
tblOffRoadEquipment	HorsePower	208.00	232.00
tblOffRoadEquipment	HorsePower	208.00	585.00
tblOffRoadEquipment	HorsePower	208.00	207.00
tblOffRoadEquipment	HorsePower	208.00	232.00
tblOffRoadEquipment	HorsePower	208.00	232.00
tblOffRoadEquipment	HorsePower	208.00	232.00
tblOffRoadEquipment	HorsePower	208.00	232.00
tblOffRoadEquipment	HorsePower	208.00	232.00
tblOffRoadEquipment	HorsePower	208.00	585.00
tblOffRoadEquipment	HorsePower	208.00	207.00
tblOffRoadEquipment	HorsePower	208.00	232.00
tblOffRoadEquipment	HorsePower	208.00	585.00
tblOffRoadEquipment	HorsePower	208.00	207.00
tblOffRoadEquipment	HorsePower	208.00	232.00
tblOffRoadEquipment	HorsePower	208.00	585.00
tblOffRoadEquipment	HorsePower	208.00	207.00
tblOffRoadEquipment	HorsePower	208.00	232.00
tblOffRoadEquipment	HorsePower	208.00	585.00
tblOffRoadEquipment	HorsePower	208.00	207.00
tblOffRoadEquipment	HorsePower	208.00	232.00
tblOffRoadEquipment	HorsePower	208.00	585.00
tblOffRoadEquipment	HorsePower	208.00	207.00

tblOffRoadEquipment	HorsePower	208.00	232.00
tblOffRoadEquipment	HorsePower	208.00	585.00
tblOffRoadEquipment	HorsePower	208.00	207.00
tblOffRoadEquipment	HorsePower	208.00	232.00
tblOffRoadEquipment	HorsePower	208.00	585.00
tblOffRoadEquipment	HorsePower	208.00	207.00
tblOffRoadEquipment	HorsePower	208.00	232.00
tblOffRoadEquipment	HorsePower	208.00	585.00
tblOffRoadEquipment	HorsePower	208.00	207.00
tblOffRoadEquipment	HorsePower	208.00	232.00
tblOffRoadEquipment	HorsePower	208.00	585.00
tblOffRoadEquipment	HorsePower	208.00	207.00
tblOffRoadEquipment	HorsePower	174.00	259.00
tblOffRoadEquipment	HorsePower	174.00	259.00
tblOffRoadEquipment	HorsePower	174.00	259.00
tblOffRoadEquipment	HorsePower	174.00	259.00
tblOffRoadEquipment	HorsePower	174.00	259.00
tblOffRoadEquipment	HorsePower	174.00	259.00
tblOffRoadEquipment	HorsePower	174.00	259.00
tblOffRoadEquipment	HorsePower	174.00	259.00
tblOffRoadEquipment	HorsePower	174.00	259.00
tblOffRoadEquipment	HorsePower	174.00	259.00
tblOffRoadEquipment	HorsePower	174.00	259.00
tblOffRoadEquipment	HorsePower	171.00	130.00
tblOffRoadEquipment	HorsePower	171.00	180.00
tblOffRoadEquipment	HorsePower	171.00	130.00
tblOffRoadEquipment	HorsePower	171.00	407.00

tblOffRoadEquipment	HorsePower	171.00	130.00
tblOffRoadEquipment	HorsePower	171.00	180.00
tblOffRoadEquipment	HorsePower	171.00	130.00
tblOffRoadEquipment	HorsePower	171.00	180.00
tblOffRoadEquipment	HorsePower	171.00	130.00
tblOffRoadEquipment	HorsePower	171.00	180.00
tblOffRoadEquipment	HorsePower	171.00	210.00
tblOffRoadEquipment	HorsePower	171.00	130.00
tblOffRoadEquipment	HorsePower	171.00	180.00
tblOffRoadEquipment	HorsePower	171.00	130.00
tblOffRoadEquipment	HorsePower	171.00	180.00
tblOffRoadEquipment	HorsePower	171.00	130.00
tblOffRoadEquipment	HorsePower	171.00	180.00
tblOffRoadEquipment	HorsePower	171.00	130.00
tblOffRoadEquipment	HorsePower	171.00	180.00
tblOffRoadEquipment	HorsePower	171.00	130.00
tblOffRoadEquipment	HorsePower	171.00	180.00
tblOffRoadEquipment	HorsePower	171.00	180.00
tblOffRoadEquipment	HorsePower	171.00	210.00
tblOffRoadEquipment	HorsePower	171.00	130.00
tblOffRoadEquipment	HorsePower	171.00	180.00
tblOffRoadEquipment	HorsePower	171.00	130.00
tblOffRoadEquipment	HorsePower	171.00	180.00
tblOffRoadEquipment	HorsePower	171.00	130.00
tblOffRoadEquipment	HorsePower	171.00	180.00
tblOffRoadEquipment	HorsePower	171.00	210.00
tblOffRoadEquipment	HorsePower	171.00	180.00
tblOffRoadEquipment	HorsePower	171.00	210.00

tblOffRoadEquipment	HorsePower	171.00	130.00
tblOffRoadEquipment	HorsePower	171.00	407.00
tblOffRoadEquipment	HorsePower	171.00	130.00
tblOffRoadEquipment	HorsePower	171.00	407.00
tblOffRoadEquipment	HorsePower	171.00	130.00
tblOffRoadEquipment	HorsePower	171.00	180.00
tblOffRoadEquipment	HorsePower	171.00	130.00
tblOffRoadEquipment	HorsePower	171.00	180.00
tblOffRoadEquipment	HorsePower	171.00	130.00
tblOffRoadEquipment	HorsePower	171.00	180.00
tblOffRoadEquipment	HorsePower	171.00	130.00
tblOffRoadEquipment	HorsePower	171.00	180.00
tblOffRoadEquipment	HorsePower	171.00	130.00
tblOffRoadEquipment	HorsePower	171.00	180.00
tblOffRoadEquipment	HorsePower	171.00	210.00
tblOffRoadEquipment	HorsePower	171.00	407.00
tblOffRoadEquipment	HorsePower	171.00	130.00
tblOffRoadEquipment	HorsePower	171.00	180.00
tblOffRoadEquipment	HorsePower	171.00	407.00
tblOffRoadEquipment	HorsePower	171.00	130.00
tblOffRoadEquipment	HorsePower	171.00	180.00
tblOffRoadEquipment	HorsePower	171.00	407.00
tblOffRoadEquipment	HorsePower	171.00	130.00
tblOffRoadEquipment	HorsePower	171.00	180.00
tblOffRoadEquipment	HorsePower	171.00	407.00
tblOffRoadEquipment	HorsePower	171.00	130.00
tblOffRoadEquipment	HorsePower	171.00	180.00
tblOffRoadEquipment	HorsePower	171.00	407.00

tblOffRoadEquipment	HorsePower	171.00	407.00
tblOffRoadEquipment	HorsePower	171.00	130.00
tblOffRoadEquipment	HorsePower	171.00	407.00
tblOffRoadEquipment	HorsePower	171.00	130.00
tblOffRoadEquipment	HorsePower	171.00	130.00
tblOffRoadEquipment	HorsePower	171.00	180.00
tblOffRoadEquipment	HorsePower	171.00	180.00
tblOffRoadEquipment	HorsePower	171.00	210.00
tblOffRoadEquipment	HorsePower	171.00	130.00
tblOffRoadEquipment	HorsePower	171.00	180.00
tblOffRoadEquipment	HorsePower	171.00	180.00
tblOffRoadEquipment	HorsePower	171.00	210.00
tblOffRoadEquipment	HorsePower	171.00	130.00
tblOffRoadEquipment	HorsePower	171.00	180.00
tblOffRoadEquipment	HorsePower	171.00	407.00
tblOffRoadEquipment	HorsePower	171.00	130.00
tblOffRoadEquipment	HorsePower	171.00	407.00
tblOffRoadEquipment	HorsePower	199.00	160.00
tblOffRoadEquipment	HorsePower	199.00	160.00
tblOffRoadEquipment	HorsePower	199.00	160.00
tblOffRoadEquipment	HorsePower	199.00	160.00
tblOffRoadEquipment	HorsePower	199.00	160.00
tblOffRoadEquipment	HorsePower	199.00	160.00
tblOffRoadEquipment	HorsePower	199.00	160.00
tblOffRoadEquipment	HorsePower	199.00	160.00
tblOffRoadEquipment	HorsePower	199.00	160.00
tblOffRoadEquipment	HorsePower	199.00	160.00
tblOffRoadEquipment	OffRoadEquipmentUnitAmount	1.00	2.00

tblOffRoadEquipment	OffRoadEquipmentUnitAmount	1.00	2.00
tblOffRoadEquipment	OffRoadEquipmentUnitAmount	1.00	2.00
tblOffRoadEquipment	OffRoadEquipmentUnitAmount	1.00	2.00
tblOffRoadEquipment	OffRoadEquipmentUnitAmount	1.00	2.00
tblOffRoadEquipment	OffRoadEquipmentUnitAmount	1.00	2.00
tblOffRoadEquipment	OffRoadEquipmentUnitAmount	1.00	3.00
tblOffRoadEquipment	OffRoadEquipmentUnitAmount	1.00	2.00
tblOffRoadEquipment	OffRoadEquipmentUnitAmount	1.00	2.00
tblOffRoadEquipment	OffRoadEquipmentUnitAmount	1.00	3.00
tblOffRoadEquipment	OffRoadEquipmentUnitAmount	1.00	3.00
tblOffRoadEquipment	OffRoadEquipmentUnitAmount	1.00	4.00
tblOffRoadEquipment	OffRoadEquipmentUnitAmount	1.00	3.00
tblOffRoadEquipment	OffRoadEquipmentUnitAmount	1.00	3.00
tblOffRoadEquipment	OffRoadEquipmentUnitAmount	1.00	3.00
tblOffRoadEquipment	OffRoadEquipmentUnitAmount	1.00	2.00
tblOffRoadEquipment	OffRoadEquipmentUnitAmount	1.00	2.00
tblOffRoadEquipment	OffRoadEquipmentUnitAmount	3.00	1.00
tblOffRoadEquipment	OffRoadEquipmentUnitAmount	3.00	1.00
tblOffRoadEquipment	OffRoadEquipmentUnitAmount	3.00	1.00
tblOffRoadEquipment	OffRoadEquipmentUnitAmount	3.00	1.00
tblOffRoadEquipment	OffRoadEquipmentUnitAmount	3.00	1.00
tblOffRoadEquipment	OffRoadEquipmentUnitAmount	3.00	1.00
tblOffRoadEquipment	OffRoadEquipmentUnitAmount	3.00	1.00
tblOffRoadEquipment	OffRoadEquipmentUnitAmount	3.00	1.00
tblOffRoadEquipment	OffRoadEquipmentUnitAmount	1.00	2.00
tblOffRoadEquipment	OffRoadEquipmentUnitAmount	1.00	2.00
tblOffRoadEquipment	OffRoadEquipmentUnitAmount	1.00	2.00
tblOffRoadEquipment	OffRoadEquipmentUnitAmount	1.00	2.00

tblOffRoadEquipment	OffRoadEquipmentUnitAmount	1.00	2.00
tblOffRoadEquipment	OffRoadEquipmentUnitAmount	1.00	2.00
tblOffRoadEquipment	OffRoadEquipmentUnitAmount	1.00	2.00
tblOffRoadEquipment	OffRoadEquipmentUnitAmount	1.00	4.00
tblOffRoadEquipment	OffRoadEquipmentUnitAmount	1.00	4.00
tblOffRoadEquipment	OffRoadEquipmentUnitAmount	1.00	4.00
tblOffRoadEquipment	OffRoadEquipmentUnitAmount	1.00	4.00
tblOffRoadEquipment	OffRoadEquipmentUnitAmount	1.00	4.00
tblOffRoadEquipment	OffRoadEquipmentUnitAmount	1.00	4.00
tblOffRoadEquipment	OffRoadEquipmentUnitAmount	1.00	3.00
tblOffRoadEquipment	OffRoadEquipmentUnitAmount	1.00	2.00
tblOffRoadEquipment	UsageHours	7.00	10.00
tblOffRoadEquipment	UsageHours	7.00	10.00
tblOffRoadEquipment	UsageHours	7.00	10.00
tblOffRoadEquipment	UsageHours	7.00	10.00
tblOffRoadEquipment	UsageHours	7.00	10.00
tblOffRoadEquipment	UsageHours	7.00	10.00
tblOffRoadEquipment	UsageHours	7.00	10.00
tblOffRoadEquipment	UsageHours	7.00	10.00
tblOffRoadEquipment	UsageHours	7.00	10.00
tblOffRoadEquipment	UsageHours	7.00	10.00
tblOffRoadEquipment	UsageHours	7.00	10.00
tblOffRoadEquipment	UsageHours	7.00	10.00
tblOffRoadEquipment	UsageHours	7.00	10.00
tblOffRoadEquipment	UsageHours	7.00	10.00
tblOffRoadEquipment	UsageHours	7.00	10.00
tblOffRoadEquipment	UsageHours	7.00	10.00

tblOffRoadEquipment	UsageHours	7.00	10.00
tblOffRoadEquipment	UsageHours	7.00	10.00
tblOffRoadEquipment	UsageHours	7.00	10.00
tblOffRoadEquipment	UsageHours	7.00	10.00
tblOffRoadEquipment	UsageHours	7.00	10.00
tblOffRoadEquipment	UsageHours	7.00	10.00
tblOffRoadEquipment	UsageHours	7.00	10.00
tblOffRoadEquipment	UsageHours	7.00	10.00
tblOffRoadEquipment	UsageHours	7.00	10.00
tblOffRoadEquipment	UsageHours	7.00	10.00
tblOffRoadEquipment	UsageHours	7.00	10.00
tblOffRoadEquipment	UsageHours	7.00	10.00
tblOffRoadEquipment	UsageHours	7.00	10.00
tblOffRoadEquipment	UsageHours	7.00	10.00
tblOffRoadEquipment	UsageHours	7.00	10.00
tblOffRoadEquipment	UsageHours	7.00	10.00
tblOffRoadEquipment	UsageHours	7.00	10.00
tblOffRoadEquipment	UsageHours	7.00	10.00
tblOffRoadEquipment	UsageHours	7.00	10.00
tblOffRoadEquipment	UsageHours	7.00	10.00
tblOffRoadEquipment	UsageHours	7.00	10.00
tblOffRoadEquipment	UsageHours	8.00	10.00
tblOffRoadEquipment	UsageHours	8.00	10.00
tblOffRoadEquipment	UsageHours	8.00	10.00
tblOffRoadEquipment	UsageHours	8.00	10.00
tblOffRoadEquipment	UsageHours	8.00	10.00
tblOffRoadEquipment	UsageHours	8.00	10.00

tblOffRoadEquipment	UsageHours	8.00	10.00
tblOffRoadEquipment	UsageHours	8.00	10.00
tblOffRoadEquipment	UsageHours	8.00	10.00
tblOffRoadEquipment	UsageHours	8.00	10.00
tblOffRoadEquipment	UsageHours	8.00	10.00
tblOffRoadEquipment	UsageHours	8.00	10.00
tblOffRoadEquipment	UsageHours	8.00	10.00
tblOffRoadEquipment	UsageHours	8.00	10.00
tblOffRoadEquipment	UsageHours	8.00	10.00
tblOffRoadEquipment	UsageHours	8.00	10.00
tblOffRoadEquipment	UsageHours	8.00	10.00
tblOffRoadEquipment	UsageHours	8.00	10.00
tblOffRoadEquipment	UsageHours	8.00	10.00
tblOffRoadEquipment	UsageHours	8.00	10.00
tblOffRoadEquipment	UsageHours	8.00	10.00
tblOffRoadEquipment	UsageHours	8.00	10.00
tblOffRoadEquipment	UsageHours	8.00	10.00
tblOffRoadEquipment	UsageHours	8.00	10.00
tblOffRoadEquipment	UsageHours	8.00	10.00
tblOffRoadEquipment	UsageHours	8.00	10.00
tblProjectCharacteristics	OperationalYear	2014	2035
tblProjectCharacteristics	UrbanizationLevel	Urban	Rural

2.0 Emissions Summary

2.1 Overall Construction

Unmitigated Construction

	ROG	NOx	CO	SO2	Fugitive PM10	Exhaust PM10	PM10 Total	Fugitive PM2.5	Exhaust PM2.5	PM2.5 Total	Bio- CO2	NBio- CO2	Total CO2	CH4	N2O	CO2e
Year	tons/yr										MT/yr					
2031	0.3573	1.4230	2.5509	8.7800e-003	0.0000	0.0465	0.0465	0.0000	0.0465	0.0465	0.0000	788.2384	788.2384	0.0286	0.0000	788.8381
2032	0.1053	0.4472	0.9693	2.6900e-003	0.0000	0.0124	0.0124	0.0000	0.0124	0.0124	0.0000	226.9563	226.9563	8.4500e-003	0.0000	227.1338
2033	4.2100e-003	0.0141	0.0216	1.1000e-004	0.0000	4.5000e-004	4.5000e-004	0.0000	4.5000e-004	4.5000e-004	0.0000	9.6840	9.6840	3.4000e-004	0.0000	9.6912
2034	0.2311	0.9325	1.4946	5.5200e-003	0.0000	0.0304	0.0304	0.0000	0.0304	0.0304	0.0000	496.4369	496.4369	0.0185	0.0000	496.8250
2035	0.7101	2.2200	5.7814	0.0195	0.0000	0.0679	0.0679	0.0000	0.0679	0.0679	0.0000	1,756.8662	1,756.8662	0.0565	0.0000	1,758.0536
2036	3.8100e-003	8.7000e-003	0.0215	1.1000e-004	0.0000	3.0000e-004	3.0000e-004	0.0000	3.0000e-004	3.0000e-004	0.0000	9.6840	9.6840	3.1000e-004	0.0000	9.6905
2037	3.8100e-003	8.7000e-003	0.0215	1.1000e-004	0.0000	3.0000e-004	3.0000e-004	0.0000	3.0000e-004	3.0000e-004	0.0000	9.6840	9.6840	3.1000e-004	0.0000	9.6905
Total	**1.4156**	**5.0541**	**10.8608**	**0.0369**	**0.0000**	**0.1582**	**0.1582**	**0.0000**	**0.1582**	**0.1582**	**0.0000**	**3,297.5499**	**3,297.5499**	**0.1130**	**0.0000**	**3,299.9226**

2.1 Overall Construction

Mitigated Construction

	ROG	NOx	CO	SO2	Fugitive PM10	Exhaust PM10	PM10 Total	Fugitive PM2.5	Exhaust PM2.5	PM2.5 Total	Bio- CO2	NBio- CO2	Total CO2	CH4	N2O	CO2e
Year	tons/yr										MT/yr					
2031	0.0964	0.5924	3.9075	8.7800e-003	0.0000	0.0122	0.0122	0.0000	0.0122	0.0122	0.0000	788.2374	788.2374	0.0286	0.0000	788.8371
2032	0.0297	0.2516	1.2834	2.6900e-003	0.0000	3.5200e-003	3.5200e-003	0.0000	3.5200e-003	3.5200e-003	0.0000	226.9561	226.9561	8.4500e-003	0.0000	227.1335
2033	1.1300e-003	4.8800e-003	0.0413	1.1000e-004	0.0000	1.5000e-004	1.5000e-004	0.0000	1.5000e-004	1.5000e-004	0.0000	9.6840	9.6840	3.4000e-004	0.0000	9.6912
2034	0.0607	0.3735	2.3730	5.5200e-003	0.0000	7.7000e-003	7.7000e-003	0.0000	7.7000e-003	7.7000e-003	0.0000	496.4363	496.4363	0.0185	0.0000	496.8244
2035	0.2149	1.3195	8.8312	0.0195	0.0000	0.0273	0.0273	0.0000	0.0273	0.0273	0.0000	1,756.8642	1,756.8642	0.0565	0.0000	1,758.0515
2036	1.1300e-003	4.8800e-003	0.0413	1.1000e-004	0.0000	1.5000e-004	1.5000e-004	0.0000	1.5000e-004	1.5000e-004	0.0000	9.6840	9.6840	3.1000e-004	0.0000	9.6905
2037	1.1300e-003	4.8800e-003	0.0413	1.1000e-004	0.0000	1.5000e-004	1.5000e-004	0.0000	1.5000e-004	1.5000e-004	0.0000	9.6840	9.6840	3.1000e-004	0.0000	9.6905
Total	**0.4052**	**2.5516**	**16.5190**	**0.0369**	**0.0000**	**0.0512**	**0.0512**	**0.0000**	**0.0512**	**0.0512**	**0.0000**	**3,297.5460**	**3,297.5460**	**0.1130**	**0.0000**	**3,299.9186**

	ROG	NOx	CO	SO2	Fugitive PM10	Exhaust PM10	PM10 Total	Fugitive PM2.5	Exhaust PM2.5	PM2.5 Total	Bio- CO2	NBio-CO2	Total CO2	CH4	N20	CO2e
Percent Reduction	**71.38**	**49.52**	**-52.10**	**0.00**	**0.00**	**67.66**	**67.66**	**0.00**	**67.66**	**67.66**	**0.00**	**0.00**	**0.00**	**0.00**	**0.00**	**0.00**

2.2 Overall Operational

Unmitigated Operational

	ROG	NOx	CO	SO2	Fugitive PM10	Exhaust PM10	PM10 Total	Fugitive PM2.5	Exhaust PM2.5	PM2.5 Total	Bio- CO2	NBio- CO2	Total CO2	CH4	N2O	CO2e
Category	tons/yr										MT/yr					
Area	0.0000					0.0000	0.0000		0.0000	0.0000	0.0000	0.0000	0.0000	0.0000	0.0000	0.0000
Energy	0.0000	0.0000	0.0000	0.0000		0.0000	0.0000		0.0000	0.0000	0.0000	0.0000	0.0000	0.0000	0.0000	0.0000
Mobile	0.0000	0.0000	0.0000	0.0000	0.0000	0.0000	0.0000	0.0000	0.0000	0.0000	0.0000	0.0000	0.0000	0.0000	0.0000	0.0000
Waste						0.0000	0.0000		0.0000	0.0000	0.0000	0.0000	0.0000	0.0000	0.0000	0.0000
Water						0.0000	0.0000		0.0000	0.0000	0.0000	0.0000	0.0000	0.0000	0.0000	0.0000
Total	**0.0000**	**0.0000**	**0.0000**	**0.0000**	**0.0000**	**0.0000**	**0.0000**	**0.0000**	**0.0000**	**0.0000**	**0.0000**	**0.0000**	**0.0000**	**0.0000**	**0.0000**	**0.0000**

2.2 Overall Operational

Mitigated Operational

	ROG	NOx	CO	SO2	Fugitive PM10	Exhaust PM10	PM10 Total	Fugitive PM2.5	Exhaust PM2.5	PM2.5 Total	Bio- CO2	NBio- CO2	Total CO2	CH4	N2O	CO2e
Category	tons/yr										MT/yr					
Area	0.0000					0.0000	0.0000		0.0000	0.0000	0.0000	0.0000	0.0000	0.0000	0.0000	0.0000
Energy	0.0000	0.0000	0.0000	0.0000		0.0000	0.0000		0.0000	0.0000	0.0000	0.0000	0.0000	0.0000	0.0000	0.0000
Mobile	0.0000	0.0000	0.0000	0.0000	0.0000	0.0000	0.0000	0.0000	0.0000	0.0000	0.0000	0.0000	0.0000	0.0000	0.0000	0.0000
Waste						0.0000	0.0000		0.0000	0.0000	0.0000	0.0000	0.0000	0.0000	0.0000	0.0000
Water						0.0000	0.0000		0.0000	0.0000	0.0000	0.0000	0.0000	0.0000	0.0000	0.0000
Total	**0.0000**	**0.0000**	**0.0000**	**0.0000**	**0.0000**	**0.0000**	**0.0000**	**0.0000**	**0.0000**	**0.0000**	**0.0000**	**0.0000**	**0.0000**	**0.0000**	**0.0000**	**0.0000**

	ROG	**NOx**	**CO**	**SO2**	**Fugitive PM10**	**Exhaust PM10**	**PM10 Total**	**Fugitive PM2.5**	**Exhaust PM2.5**	**PM2.5 Total**	**Bio- CO2**	**NBio-CO2**	**Total CO2**	**CH4**	**N20**	**CO2e**
Percent Reduction	**0.00**	**0.00**	**0.00**	**0.00**	**0.00**	**0.00**	**0.00**	**0.00**	**0.00**	**0.00**	**0.00**	**0.00**	**0.00**	**0.00**	**0.00**	**0.00**

3.0 Construction Detail

Construction Phase

Phase Number	Phase Name	Phase Type	Start Date	End Date	Num Days Week	Num Days	Phase Description
1	Year 12 Month 1	Building Construction	1/1/2031	1/31/2031	6	27	
2	Year 12 Month 2	Building Construction	2/1/2031	2/28/2031	6	24	
3	Year 12 Month 3	Building Construction	3/1/2031	3/31/2031	6	26	

4	Year 12 Month 4	Building Construction	4/1/2031	4/30/2031	6	26	
5	Year 12 Month 5	Building Construction	5/1/2031	5/31/2031	6	27	
6	Year 12 Month 6	Building Construction	6/1/2031	6/30/2031	6	25	
7	Year 12 Month 7	Building Construction	7/1/2031	7/31/2031	6	27	
8	Year 12 Month 8	Building Construction	8/1/2031	8/30/2031	6	26	
9	Year 12 Month 9	Building Construction	9/1/2031	9/30/2031	6	26	
10	Year 12 Month 10	Building Construction	10/1/2031	10/31/2031	6	27	
11	Year 12 Month 11	Building Construction	11/1/2031	11/29/2031	6	25	
12	Year 12 Month 12	Building Construction	12/1/2031	12/31/2031	6	27	
13	Year 13 Month 1	Building Construction	1/1/2032	1/31/2032	6	27	
14	Year 13 Month 2	Building Construction	2/1/2032	2/28/2032	6	24	
15	Year 13 Month 3	Building Construction	3/1/2032	3/31/2032	6	27	
16	Year 13 Month 4	Building Construction	4/1/2032	4/30/2032	6	26	
17	Year 13 Month 5	Building Construction	5/1/2032	5/31/2032	6	26	
18	Year 13 Month 6	Building Construction	6/1/2032	6/30/2032	6	26	
19	Year 13 Month 7	Building Construction	7/1/2032	7/31/2032	6	27	
20	Year 13 Month 8	Building Construction	8/1/2032	8/31/2032	6	26	
21	Year 13 Month 9	Building Construction	9/1/2032	9/30/2032	6	26	
22	Year 13 Month 10	Building Construction	10/1/2032	10/30/2032	6	26	
23	Year 13 Month 11	Building Construction	11/1/2032	11/30/2032	6	26	
24	Year 13 Month 12	Building Construction	12/1/2032	12/31/2032	6	27	
25	Year 14 Month 1	Building Construction	1/1/2033	1/31/2033	6	26	
26	Year 14 Month 2	Building Construction	2/1/2033	2/28/2033	6	24	
27	Year 14 Month 3	Building Construction	3/1/2033	3/31/2033	6	27	
28	Year 14 Month 4	Building Construction	4/1/2033	4/30/2033	6	26	
29	Year 14 Month 5	Building Construction	5/1/2033	5/31/2033	6	26	
30	Year 14 Month 6	Building Construction	6/1/2033	6/30/2033	6	26	
31	Year 14 Month 7	Building Construction	7/1/2033	7/30/2033	6	26	

32	Year 14 Month 8	Building Construction	8/1/2033	8/31/2033	6	27	
33	Year 14 Month 9	Building Construction	9/1/2033	9/30/2033	6	26	
34	Year 14 Month 10	Building Construction	10/1/2033	10/31/2033	6	26	
35	Year 14 Month 11	Building Construction	11/1/2033	11/30/2033	6	26	
36	Year 14 Month 12	Building Construction	12/1/2033	12/31/2033	6	27	
37	Year 15 Month 1	Building Construction	1/1/2034	1/31/2034	6	26	
38	Year 15 Month 2	Building Construction	2/1/2034	2/28/2034	6	24	
39	Year 15 Month 3	Building Construction	3/1/2034	3/31/2034	6	27	
40	Year 15 Month 4	Building Construction	4/1/2034	4/29/2034	6	25	
41	Year 15 Month 5	Building Construction	5/1/2034	5/31/2034	6	27	
42	Year 15 Month 6	Building Construction	6/1/2034	6/30/2034	6	26	
43	Year 15 Month 7	Building Construction	7/1/2034	7/31/2034	6	26	
44	Year 15 Month 8	Building Construction	8/1/2034	8/31/2034	6	27	
45	Year 15 Month 9	Building Construction	9/1/2034	9/30/2034	6	26	
46	Year 15 Month 10	Building Construction	10/1/2034	10/31/2034	6	26	
47	Year 15 Month 11	Building Construction	11/1/2034	11/30/2034	6	26	
48	Year 15 Month 12	Building Construction	12/1/2034	12/30/2034	6	26	
49	Year 16 Month 1	Building Construction	1/1/2035	1/31/2035	6	27	
50	Year 16 Month 2	Building Construction	2/1/2035	2/28/2035	6	24	
51	Year 16 Month 3	Building Construction	3/1/2035	3/31/2035	6	27	
52	Year 16 Month 4	Building Construction	4/1/2035	4/30/2035	6	25	
53	Year 16 Month 5	Building Construction	5/1/2035	5/31/2035	6	27	
54	Year 16 Month 6	Building Construction	6/1/2035	6/30/2035	6	26	
55	Year 16 Month 7	Building Construction	7/1/2035	7/31/2035	6	26	
56	Year 16 Month 8	Building Construction	8/1/2035	8/31/2035	6	27	
57	Year 16 Month 9	Building Construction	9/1/2035	9/29/2035	6	25	
58	Year 16 Month 10	Building Construction	10/1/2035	10/31/2035	6	27	
59	Year 16 Month 11	Building Construction	11/1/2035	11/30/2035	6	26	

60	Year 16 Month 12	Building Construction	12/1/2035	12/31/2035	6	26	
61	Year 17 Month 1	Building Construction	1/1/2036	1/31/2036	6	27	
62	Year 17 Month 2	Building Construction	2/1/2036	2/28/2036	6	24	
63	Year 17 Month 3	Building Construction	3/1/2036	3/31/2036	6	26	
64	Year 17 Month 4	Building Construction	4/1/2036	4/30/2036	6	26	
65	Year 17 Month 5	Building Construction	5/1/2036	5/31/2036	6	27	
66	Year 17 Month 6	Building Construction	6/1/2036	6/30/2036	6	25	
67	Year 17 Month 7	Building Construction	7/1/2036	7/31/2036	6	27	
68	Year 17 Month 8	Building Construction	8/1/2036	8/30/2036	6	26	
69	Year 17 Month 9	Building Construction	9/1/2036	9/30/2036	6	26	
70	Year 17 Month 10	Building Construction	10/1/2036	10/31/2036	6	27	
71	Year 17 Month 11	Building Construction	11/1/2036	11/29/2036	6	25	
72	Year 17 Month 12	Building Construction	12/1/2036	12/31/2036	6	27	
73	Year 18 Month 1	Building Construction	1/1/2037	1/31/2037	6	27	
74	Year 18 Month 2	Building Construction	2/1/2037	2/28/2037	6	24	
75	Year 18 Month 3	Building Construction	3/1/2037	3/31/2037	6	26	
76	Year 18 Month 4	Building Construction	4/1/2037	4/30/2037	6	26	
77	Year 18 Month 5	Building Construction	5/1/2037	5/30/2037	6	26	
78	Year 18 Month 6	Building Construction	6/1/2037	6/30/2037	6	26	
79	Year 18 Month 7	Building Construction	7/1/2037	7/31/2037	6	27	
80	Year 18 Month 8	Building Construction	8/1/2037	8/31/2037	6	26	
81	Year 18 Month 9	Building Construction	9/1/2037	9/30/2037	6	26	
82	Year 18 Month 10	Building Construction	10/1/2037	10/31/2037	6	27	
83	Year 18 Month 11	Building Construction	11/1/2037	11/30/2037	6	25	
84	Year 18 Month 12	Building Construction	12/1/2037	12/31/2037	6	27	

Acres of Grading (Site Preparation Phase): 0

Acres of Grading (Grading Phase): 0

Acres of Paving: 0

Residential Indoor: 0; Residential Outdoor: 0; Non-Residential Indoor: 0; Non-Residential Outdoor: 0 (Architectural Coating – sqft)

OffRoad Equipment

Phase Name	Offroad Equipment Type	Amount	Usage Hours	Horse Power	Load Factor
Year 12 Month 1	Crawler Tractors	1	10.00	232	0.43
Year 12 Month 1	Other Construction Equipment	1	10.00	130	0.42
Year 12 Month 1	Other Construction Equipment	1	10.00	180	0.42
Year 12 Month 1	Rubber Tired Loaders	1	10.00	160	0.36
Year 12 Month 1	Tractors/Loaders/Backhoes	1	10.00	67	0.37
Year 12 Month 2	Cranes	2	10.00	226	0.29
Year 12 Month 2	Crawler Tractors	1	10.00	232	0.43
Year 12 Month 2	Other Construction Equipment	2	10.00	130	0.42
Year 12 Month 2	Other Construction Equipment	2	10.00	180	0.42
Year 12 Month 2	Rubber Tired Loaders	1	10.00	160	0.36
Year 12 Month 2	Tractors/Loaders/Backhoes	1	10.00	67	0.37
Year 12 Month 2	Welders	2	10.00	42	0.45
Year 12 Month 3	Cranes	2	10.00	226	0.29
Year 12 Month 3	Other Construction Equipment	1	10.00	130	0.42
Year 12 Month 3	Other Construction Equipment	1	10.00	180	0.42
Year 12 Month 3	Welders	2	10.00	42	0.45
Year 12 Month 4	Cranes	3	10.00	226	0.29
Year 12 Month 4	Other Construction Equipment	1	10.00	130	0.42
Year 12 Month 4	Other Construction Equipment	4	10.00	180	0.42
Year 12 Month 4	Other Construction Equipment	3	10.00	210	0.42
Year 12 Month 4	Welders	2	10.00	42	0.45
Year 12 Month 5	Cranes	2	10.00	226	0.29
Year 12 Month 5	Other Construction Equipment	1	10.00	130	0.42

Year 12 Month 5	Other Construction Equipment	1	10.00	180	0.42
Year 12 Month 5	Welders	2	10.00	42	0.45
Year 12 Month 6	Cranes	2	10.00	226	0.29
Year 12 Month 6	Other Construction Equipment	1	10.00	130	0.42
Year 12 Month 6	Other Construction Equipment	1	10.00	180	0.42
Year 12 Month 6	Welders	2	10.00	42	0.45
Year 12 Month 7	Cranes	1	10.00	226	0.29
Year 12 Month 7	Other Construction Equipment	1	10.00	130	0.42
Year 12 Month 7	Other Construction Equipment	1	10.00	180	0.42
Year 12 Month 7	Welders	1	10.00	42	0.45
Year 12 Month 8	Cranes	1	10.00	226	0.29
Year 12 Month 8	Other Construction Equipment	3	10.00	130	0.42
Year 12 Month 8	Other Construction Equipment	1	10.00	180	0.42
Year 12 Month 8	Welders	1	10.00	42	0.45
Year 12 Month 8	Crawler Tractors	4	10.00	232	0.43
Year 12 Month 8	Crawler Tractors	1	10.00	585	0.43
Year 12 Month 8	Crawler Tractors	1	10.00	207	0.43
Year 12 Month 8	Graders	1	10.00	259	0.41
Year 12 Month 8	Other Construction Equipment	1	10.00	407	0.42
Year 12 Month 9	Other Construction Equipment	2	10.00	130	0.42
Year 12 Month 9	Crawler Tractors	4	10.00	232	0.43
Year 12 Month 9	Crawler Tractors	1	10.00	585	0.43
Year 12 Month 9	Crawler Tractors	1	10.00	207	0.43
Year 12 Month 9	Graders	1	10.00	259	0.41
Year 12 Month 9	Other Construction Equipment	1	10.00	407	0.42
Year 12 Month 10	Other Construction Equipment	2	10.00	130	0.42
Year 12 Month 10	Crawler Tractors	4	10.00	232	0.43
Year 12 Month 10	Crawler Tractors	1	10.00	585	0.43

Year 12 Month 10	Crawler Tractors	1	10.00	207	0.43
Year 12 Month 10	Graders	1	10.00	259	0.41
Year 12 Month 10	Other Construction Equipment	1	10.00	407	0.42
Year 13 Month 1	Crawler Tractors	1	10.00	232	0.43
Year 13 Month 1	Rubber Tired Loaders	1	10.00	160	0.36
Year 13 Month 2	Cranes	2	10.00	226	0.29
Year 13 Month 2	Crawler Tractors	1	10.00	232	0.43
Year 13 Month 2	Other Construction Equipment	1	10.00	130	0.42
Year 13 Month 2	Other Construction Equipment	1	10.00	180	0.42
Year 13 Month 2	Rubber Tired Loaders	1	10.00	160	0.36
Year 13 Month 2	Tractors/Loaders/Backhoes	1	10.00	67	0.37
Year 13 Month 2	Welders	2	10.00	42	0.45
Year 13 Month 3	Cranes	2	10.00	226	0.29
Year 13 Month 3	Other Construction Equipment	1	10.00	130	0.42
Year 13 Month 3	Other Construction Equipment	1	10.00	180	0.42
Year 13 Month 3	Welders	2	10.00	42	0.45
Year 13 Month 4	Cranes	2	10.00	226	0.29
Year 13 Month 4	Other Construction Equipment	1	10.00	130	0.42
Year 13 Month 4	Other Construction Equipment	4	10.00	180	0.42
Year 13 Month 4	Welders	1	10.00	42	0.45
Year 13 Month 4	Other Construction Equipment	3	10.00	210	0.42
Year 13 Month 5	Cranes	1	10.00	226	0.29
Year 13 Month 5	Other Construction Equipment	1	10.00	130	0.42
Year 13 Month 5	Other Construction Equipment	1	10.00	180	0.42
Year 13 Month 5	Welders	1	10.00	42	0.45
Year 13 Month 6	Cranes	1	10.00	226	0.29
Year 13 Month 6	Other Construction Equipment	1	10.00	130	0.42
Year 13 Month 6	Other Construction Equipment	1	10.00	180	0.42

Year 13 Month 6	Welders	1	10.00	42	0.45
Year 13 Month 7	Cranes	1	10.00	226	0.29
Year 13 Month 7	Other Construction Equipment	1	10.00	130	0.42
Year 13 Month 7	Other Construction Equipment	1	10.00	180	0.42
Year 13 Month 7	Welders	1	10.00	42	0.45
Year 13 Month 8	Cranes	1	10.00	226	0.29
Year 13 Month 8	Other Construction Equipment	1	10.00	130	0.42
Year 13 Month 8	Other Construction Equipment	1	10.00	180	0.42
Year 13 Month 8	Welders	1	10.00	42	0.45
Year 14 Month 4	Cranes	1	10.00	226	0.29
Year 14 Month 4	Other Construction Equipment	3	10.00	180	0.42
Year 14 Month 4	Other Construction Equipment	3	10.00	210	0.42
Year 15 Month 1	Crawler Tractors	1	10.00	232	0.43
Year 15 Month 1	Rubber Tired Loaders	1	10.00	160	0.36
Year 15 Month 2	Cranes	2	10.00	226	0.29
Year 15 Month 2	Crawler Tractors	1	10.00	232	0.43
Year 15 Month 2	Other Construction Equipment	1	10.00	130	0.42
Year 15 Month 2	Other Construction Equipment	1	10.00	180	0.42
Year 15 Month 2	Rubber Tired Loaders	1	10.00	160	0.36
Year 15 Month 2	Tractors/Loaders/Backhoes	1	10.00	67	0.37
Year 15 Month 2	Welders	2	10.00	42	0.45
Year 15 Month 3	Cranes	1	10.00	226	0.29
Year 15 Month 3	Welders	1	10.00	42	0.45
Year 15 Month 4	Cranes	2	10.00	226	0.29
Year 15 Month 4	Other Construction Equipment	3	10.00	180	0.42
Year 15 Month 4	Welders	1	10.00	42	0.45
Year 15 Month 4	Other Construction Equipment	3	10.00	210	0.42
Year 15 Month 5	Cranes	1	10.00	226	0.29

Year 15 Month 5	Welders	1	10.00	42	0.45
Year 15 Month 6	Cranes	1	10.00	226	0.29
Year 15 Month 6	Welders	1	10.00	42	0.45
Year 15 Month 7	Cranes	1	10.00	226	0.29
Year 15 Month 7	Welders	1	10.00	42	0.45
Year 15 Month 8	Cranes	1	10.00	226	0.29
Year 15 Month 8	Welders	1	10.00	42	0.45
Year 15 Month 9	Other Construction Equipment	2	10.00	130	0.42
Year 15 Month 9	Crawler Tractors	4	10.00	232	0.43
Year 15 Month 9	Crawler Tractors	1	10.00	585	0.43
Year 15 Month 9	Crawler Tractors	1	10.00	207	0.43
Year 15 Month 9	Graders	1	10.00	259	0.41
Year 15 Month 9	Other Construction Equipment	1	10.00	407	0.42
Year 15 Month 10	Other Construction Equipment	2	10.00	130	0.42
Year 15 Month 10	Crawler Tractors	4	10.00	232	0.43
Year 15 Month 10	Crawler Tractors	1	10.00	585	0.43
Year 15 Month 10	Crawler Tractors	1	10.00	207	0.43
Year 15 Month 10	Graders	1	10.00	259	0.41
Year 15 Month 10	Other Construction Equipment	1	10.00	407	0.42
Year 16 Month 1	Crawler Tractors	1	10.00	232	0.43
Year 16 Month 1	Other Construction Equipment	1	10.00	130	0.42
Year 16 Month 1	Other Construction Equipment	1	10.00	180	0.42
Year 16 Month 1	Rubber Tired Loaders	1	10.00	160	0.36
Year 16 Month 1	Tractors/Loaders/Backhoes	1	10.00	67	0.37
Year 16 Month 2	Cranes	3	10.00	226	0.29
Year 16 Month 2	Crawler Tractors	1	10.00	232	0.43
Year 16 Month 2	Other Construction Equipment	4	10.00	130	0.42
Year 16 Month 2	Other Construction Equipment	4	10.00	180	0.42

Year 16 Month 2	Rubber Tired Loaders	1	10.00	160	0.36
Year 16 Month 2	Tractors/Loaders/Backhoes	1	10.00	67	0.37
Year 16 Month 2	Welders	4	10.00	42	0.45
Year 16 Month 3	Cranes	3	10.00	226	0.29
Year 16 Month 3	Crawler Tractors	1	10.00	232	0.43
Year 16 Month 3	Other Construction Equipment	4	10.00	130	0.42
Year 16 Month 3	Other Construction Equipment	4	10.00	180	0.42
Year 16 Month 3	Rubber Tired Loaders	1	10.00	160	0.36
Year 16 Month 3	Tractors/Loaders/Backhoes	1	10.00	67	0.37
Year 16 Month 3	Welders	4	10.00	42	0.45
Year 16 Month 4	Cranes	4	10.00	226	0.29
Year 16 Month 4	Crawler Tractors	1	10.00	232	0.43
Year 16 Month 4	Other Construction Equipment	6	10.00	130	0.42
Year 16 Month 4	Other Construction Equipment	7	10.00	180	0.42
Year 16 Month 4	Rubber Tired Loaders	1	10.00	160	0.36
Year 16 Month 4	Tractors/Loaders/Backhoes	1	10.00	67	0.37
Year 16 Month 4	Welders	4	10.00	42	0.45
Year 16 Month 4	Other Construction Equipment	3	10.00	210	0.42
Year 16 Month 4	Crawler Tractors	4	10.00	232	0.43
Year 16 Month 4	Crawler Tractors	1	10.00	585	0.43
Year 16 Month 4	Crawler Tractors	1	10.00	207	0.43
Year 16 Month 4	Graders	1	10.00	259	0.41
Year 16 Month 4	Other Construction Equipment	1	10.00	407	0.42
Year 16 Month 5	Cranes	3	10.00	226	0.29
Year 16 Month 5	Other Construction Equipment	5	10.00	130	0.42
Year 16 Month 5	Other Construction Equipment	3	10.00	180	0.42
Year 16 Month 5	Welders	4	10.00	42	0.45
Year 16 Month 5	Crawler Tractors	4	10.00	232	0.43

Year 16 Month 5	Crawler Tractors	1	10.00	585	0.43
Year 16 Month 5	Crawler Tractors	1	10.00	207	0.43
Year 16 Month 5	Graders	1	10.00	259	0.41
Year 16 Month 5	Other Construction Equipment	1	10.00	407	0.42
Year 16 Month 6	Cranes	3	10.00	226	0.29
Year 16 Month 6	Other Construction Equipment	5	10.00	130	0.42
Year 16 Month 6	Other Construction Equipment	3	10.00	180	0.42
Year 16 Month 6	Welders	4	10.00	42	0.45
Year 16 Month 6	Crawler Tractors	4	10.00	232	0.43
Year 16 Month 6	Crawler Tractors	1	10.00	585	0.43
Year 16 Month 6	Crawler Tractors	1	10.00	207	0.43
Year 16 Month 6	Graders	1	10.00	259	0.41
Year 16 Month 6	Other Construction Equipment	1	10.00	407	0.42
Year 16 Month 7	Cranes	3	10.00	226	0.29
Year 16 Month 7	Other Construction Equipment	5	10.00	130	0.42
Year 16 Month 7	Other Construction Equipment	3	10.00	180	0.42
Year 16 Month 7	Welders	4	10.00	42	0.45
Year 16 Month 7	Crawler Tractors	4	10.00	232	0.43
Year 16 Month 7	Crawler Tractors	1	10.00	585	0.43
Year 16 Month 7	Crawler Tractors	1	10.00	207	0.43
Year 16 Month 7	Graders	1	10.00	259	0.41
Year 16 Month 7	Other Construction Equipment	1	10.00	407	0.42
Year 16 Month 8	Cranes	2	10.00	226	0.29
Year 16 Month 8	Other Construction Equipment	5	10.00	130	0.42
Year 16 Month 8	Other Construction Equipment	3	10.00	180	0.42
Year 16 Month 8	Welders	3	10.00	42	0.45
Year 16 Month 8	Crawler Tractors	4	10.00	232	0.43
Year 16 Month 8	Crawler Tractors	1	10.00	585	0.43

Year 16 Month 8	Crawler Tractors	1	10.00	207	0.43
Year 16 Month 8	Graders	1	10.00	259	0.41
Year 16 Month 8	Other Construction Equipment	1	10.00	407	0.42
Year 16 Month 9	Crawler Tractors	4	10.00	232	0.43
Year 16 Month 9	Crawler Tractors	1	10.00	585	0.43
Year 16 Month 9	Crawler Tractors	1	10.00	207	0.43
Year 16 Month 9	Graders	1	10.00	259	0.41
Year 16 Month 9	Other Construction Equipment	1	10.00	407	0.42
Year 16 Month 9	Other Construction Equipment	2	10.00	130	0.42
Year 16 Month 10	Crawler Tractors	4	10.00	232	0.43
Year 16 Month 10	Crawler Tractors	1	10.00	585	0.43
Year 16 Month 10	Crawler Tractors	1	10.00	207	0.43
Year 16 Month 10	Graders	1	10.00	259	0.41
Year 16 Month 10	Other Construction Equipment	1	10.00	407	0.42
Year 16 Month 10	Other Construction Equipment	2	10.00	130	0.42
Year 17 Month 4	Cranes	1	10.00	226	0.29
Year 17 Month 4	Other Construction Equipment	3	10.00	180	0.42
Year 17 Month 4	Other Construction Equipment	3	10.00	210	0.42
Year 18 Month 4	Cranes	1	10.00	226	0.29
Year 18 Month 4	Other Construction Equipment	3	10.00	180	0.42
Year 18 Month 4	Other Construction Equipment	3	10.00	210	0.42

Trips and VMT

Phase Name	Offroad Equipment Count	Worker Trip Number	Vendor Trip Number	Hauling Trip Number	Worker Trip Length	Vendor Trip Length	Hauling Trip Length	Worker Vehicle Class	Vendor Vehicle Class	Hauling Vehicle Class
Year 12 Month 1	5	0.00	0.00	0.00	12.30	4.60	20.00	LD_Mix	HDT_Mix	HHDT
Year 12 Month 2	11	0.00	0.00	0.00	12.30	4.60	20.00	LD_Mix	HDT_Mix	HHDT
Year 12 Month 3	6	0.00	0.00	0.00	12.30	4.60	20.00	LD_Mix	HDT_Mix	HHDT

Year 12 Month 4	13	0.00	0.00	0.00	12.30	4.60	20.00	LD_Mix	HDT_Mix	HHDT
Year 12 Month 5	6	0.00	0.00	0.00	12.30	4.60	20.00	LD_Mix	HDT_Mix	HHDT
Year 12 Month 6	6	0.00	0.00	0.00	12.30	4.60	20.00	LD_Mix	HDT_Mix	HHDT
Year 12 Month 7	4	0.00	0.00	0.00	12.30	4.60	20.00	LD_Mix	HDT_Mix	HHDT
Year 12 Month 8	14	0.00	0.00	0.00	12.30	4.60	20.00	LD_Mix	HDT_Mix	HHDT
Year 12 Month 9	10	0.00	0.00	0.00	12.30	4.60	20.00	LD_Mix	HDT_Mix	HHDT
Year 12 Month 10	10	0.00	0.00	0.00	12.30	4.60	20.00	LD_Mix	HDT_Mix	HHDT
Year 12 Month 11				0.00	12.30	4.60				
Year 12 Month 12				0.00	12.30	4.60				
Year 13 Month 1	2	0.00	0.00	0.00	12.30	4.60	20.00	LD_Mix	HDT_Mix	HHDT
Year 13 Month 2	9	0.00	0.00	0.00	12.30	4.60	20.00	LD_Mix	HDT_Mix	HHDT
Year 13 Month 3	6	0.00	0.00	0.00	12.30	4.60	20.00	LD_Mix	HDT_Mix	HHDT
Year 13 Month 4	11	0.00	0.00	0.00	12.30	4.60	20.00	LD_Mix	HDT_Mix	HHDT
Year 13 Month 5	4	0.00	0.00	0.00	12.30	4.60	20.00	LD_Mix	HDT_Mix	HHDT
Year 13 Month 6	4	0.00	0.00	0.00	12.30	4.60	20.00	LD_Mix	HDT_Mix	HHDT
Year 13 Month 7	4	0.00	0.00	0.00	12.30	4.60	20.00	LD_Mix	HDT_Mix	HHDT
Year 13 Month 8	4	0.00	0.00	0.00	12.30	4.60	20.00	LD_Mix	HDT_Mix	HHDT
Year 13 Month 9				0.00	12.30	4.60				
Year 13 Month 10				0.00	12.30	4.60				
Year 13 Month 11				0.00	12.30	4.60				
Year 13 Month 12				0.00	12.30	4.60				
Year 14 Month 1				0.00	12.30	4.60				
Year 14 Month 2				0.00	12.30	4.60				
Year 14 Month 3				0.00	12.30	4.60				
Year 14 Month 4	7	0.00	0.00	0.00	12.30	4.60	20.00	LD_Mix	HDT_Mix	HHDT
Year 14 Month 5				0.00	12.30	4.60				
Year 14 Month 6				0.00	12.30	4.60				
Year 14 Month 7				0.00	12.30	4.60				

Year 14 Month 8				0.00	12.30	4.60				
Year 14 Month 9				0.00	12.30	4.60				
Year 14 Month 10				0.00	12.30	4.60				
Year 14 Month 11				0.00	12.30	4.60				
Year 14 Month 12				0.00	12.30	4.60				
Year 15 Month 1	2	0.00	0.00	0.00	12.30	4.60	20.00	LD_Mix	HDT_Mix	HHDT
Year 15 Month 11				0.00	12.30	4.60				
Year 15 Month 12				0.00	12.30	4.60				
Year 16 Month 11				0.00	12.30	4.60				
Year 16 Month 12				0.00	12.30	4.60				
Year 15 Month 2	9	0.00	0.00	0.00	12.30	4.60	20.00	LD_Mix	HDT_Mix	HHDT
Year 15 Month 3	2	0.00	0.00	0.00	12.30	4.60	20.00	LD_Mix	HDT_Mix	HHDT
Year 15 Month 4	9	0.00	0.00	0.00	12.30	4.60	20.00	LD_Mix	HDT_Mix	HHDT
Year 15 Month 5	2	0.00	0.00	0.00	12.30	4.60	20.00	LD_Mix	HDT_Mix	HHDT
Year 15 Month 6	2	0.00	0.00	0.00	12.30	4.60	20.00	LD_Mix	HDT_Mix	HHDT
Year 15 Month 7	2	0.00	0.00	0.00	12.30	4.60	20.00	LD_Mix	HDT_Mix	HHDT
Year 15 Month 8	2	0.00	0.00	0.00	12.30	4.60	20.00	LD_Mix	HDT_Mix	HHDT
Year 15 Month 9	10	0.00	0.00	0.00	12.30	4.60	20.00	LD_Mix	HDT_Mix	HHDT
Year 15 Month 10	10	0.00	0.00	0.00	12.30	4.60	20.00	LD_Mix	HDT_Mix	HHDT
Year 17 Month 1				0.00	12.30	4.60				
Year 17 Month 2				0.00	12.30	4.60				
Year 16 Month 1	5	0.00	0.00	0.00	12.30	4.60	20.00	LD_Mix	HDT_Mix	HHDT
Year 16 Month 2	18	0.00	0.00	0.00	12.30	4.60	20.00	LD_Mix	HDT_Mix	HHDT
Year 16 Month 3	18	0.00	0.00	0.00	12.30	4.60	20.00	LD_Mix	HDT_Mix	HHDT
Year 16 Month 4	35	0.00	0.00	0.00	12.30	4.60	20.00	LD_Mix	HDT_Mix	HHDT
Year 16 Month 5	23	0.00	0.00	0.00	12.30	4.60	20.00	LD_Mix	HDT_Mix	HHDT
Year 16 Month 6	23	0.00	0.00	0.00	12.30	4.60	20.00	LD_Mix	HDT_Mix	HHDT
Year 16 Month 7	23	0.00	0.00	0.00	12.30	4.60	20.00	LD_Mix	HDT_Mix	HHDT

Year 16 Month 8	21	0.00	0.00	0.00	12.30	4.60	20.00	LD_Mix	HDT_Mix	HHDT
Year 16 Month 9	10	0.00	0.00	0.00	12.30	4.60	20.00	LD_Mix	HDT_Mix	HHDT
Year 16 Month 10	10	0.00	0.00	0.00	12.30	4.60	20.00	LD_Mix	HDT_Mix	HHDT
Year 17 Month 3				0.00	12.30	4.60				
Year 17 Month 5				0.00	12.30	4.60				
Year 17 Month 6				0.00	12.30	4.60				
Year 17 Month 7				0.00	12.30	4.60				
Year 17 Month 8				0.00	12.30	4.60				
Year 17 Month 4	7	0.00	0.00	0.00	12.30	4.60	20.00	LD_Mix	HDT_Mix	HHDT
Year 17 Month 9				0.00	12.30	4.60				
Year 17 Month 10				0.00	12.30	4.60				
Year 17 Month 11				0.00	12.30	4.60				
Year 17 Month 12				0.00	12.30	4.60				
Year 18 Month 1				0.00	12.30	4.60				
Year 18 Month 2				0.00	12.30	4.60				
Year 18 Month 3				0.00	12.30	4.60				
Year 18 Month 5				0.00	12.30	4.60				
Year 18 Month 6				0.00	12.30	4.60				
Year 18 Month 7				0.00	12.30	4.60				
Year 18 Month 8				0.00	12.30	4.60				
Year 18 Month 9				0.00	12.30	4.60				
Year 18 Month 10				0.00	12.30	4.60				
Year 18 Month 11				0.00	12.30	4.60				
Year 18 Month 4	7	0.00	0.00	0.00	12.30	4.60	20.00	LD_Mix	HDT_Mix	HHDT
Year 18 Month 12				0.00	12.30	4.60				

3.1 Mitigation Measures Construction

Use Cleaner Engines for Construction Equipment

Clean Paved Roads

3.2 Year 12 Month 1 - 2031

Unmitigated Construction On-Site

	ROG	NOx	CO	SO2	Fugitive PM10	Exhaust PM10	PM10 Total	Fugitive PM2.5	Exhaust PM2.5	PM2.5 Total	Bio- CO2	NBio- CO2	Total CO2	CH4	N2O	CO2e
Category	tons/yr										MT/yr					
Off-Road	0.0164	0.0657	0.1708	4.2000e-004		2.3300e-003	2.3300e-003		2.3300e-003	2.3300e-003	0.0000	36.3271	36.3271	1.3000e-003	0.0000	36.3543
Total	**0.0164**	**0.0657**	**0.1708**	**4.2000e-004**		**2.3300e-003**	**2.3300e-003**		**2.3300e-003**	**2.3300e-003**	**0.0000**	**36.3271**	**36.3271**	**1.3000e-003**	**0.0000**	**36.3543**

Unmitigated Construction Off-Site

	ROG	NOx	CO	SO2	Fugitive PM10	Exhaust PM10	PM10 Total	Fugitive PM2.5	Exhaust PM2.5	PM2.5 Total	Bio- CO2	NBio- CO2	Total CO2	CH4	N2O	CO2e
Category	tons/yr										MT/yr					
Hauling	0.0000	0.0000	0.0000	0.0000	0.0000	0.0000	0.0000	0.0000	0.0000	0.0000	0.0000	0.0000	0.0000	0.0000	0.0000	0.0000
Vendor	0.0000	0.0000	0.0000	0.0000	0.0000	0.0000	0.0000	0.0000	0.0000	0.0000	0.0000	0.0000	0.0000	0.0000	0.0000	0.0000
Worker	0.0000	0.0000	0.0000	0.0000	0.0000	0.0000	0.0000	0.0000	0.0000	0.0000	0.0000	0.0000	0.0000	0.0000	0.0000	0.0000
Total	**0.0000**	**0.0000**	**0.0000**	**0.0000**	**0.0000**	**0.0000**	**0.0000**	**0.0000**	**0.0000**	**0.0000**	**0.0000**	**0.0000**	**0.0000**	**0.0000**	**0.0000**	**0.0000**

3.2 Year 12 Month 1 - 2031

Mitigated Construction On-Site

	ROG	NOx	CO	SO2	Fugitive PM10	Exhaust PM10	PM10 Total	Fugitive PM2.5	Exhaust PM2.5	PM2.5 Total	Bio- CO2	NBio- CO2	Total CO2	CH4	N2O	CO2e
Category	tons/yr										MT/yr					
Off-Road	4.6700e-003	0.0366	0.2162	4.2000e-004		5.6000e-004	5.6000e-004		5.6000e-004	5.6000e-004	0.0000	36.3271	36.3271	1.3000e-003	0.0000	36.3543
Total	**4.6700e-003**	**0.0366**	**0.2162**	**4.2000e-004**		**5.6000e-004**	**5.6000e-004**		**5.6000e-004**	**5.6000e-004**	**0.0000**	**36.3271**	**36.3271**	**1.3000e-003**	**0.0000**	**36.3543**

Mitigated Construction Off-Site

	ROG	NOx	CO	SO2	Fugitive PM10	Exhaust PM10	PM10 Total	Fugitive PM2.5	Exhaust PM2.5	PM2.5 Total	Bio- CO2	NBio- CO2	Total CO2	CH4	N2O	CO2e
Category	tons/yr										MT/yr					
Hauling	0.0000	0.0000	0.0000	0.0000	0.0000	0.0000	0.0000	0.0000	0.0000	0.0000	0.0000	0.0000	0.0000	0.0000	0.0000	0.0000
Vendor	0.0000	0.0000	0.0000	0.0000	0.0000	0.0000	0.0000	0.0000	0.0000	0.0000	0.0000	0.0000	0.0000	0.0000	0.0000	0.0000
Worker	0.0000	0.0000	0.0000	0.0000	0.0000	0.0000	0.0000	0.0000	0.0000	0.0000	0.0000	0.0000	0.0000	0.0000	0.0000	0.0000
Total	**0.0000**	**0.0000**	**0.0000**	**0.0000**	**0.0000**	**0.0000**	**0.0000**	**0.0000**	**0.0000**	**0.0000**	**0.0000**	**0.0000**	**0.0000**	**0.0000**	**0.0000**	**0.0000**

3.3 Year 12 Month 2 - 2031

Unmitigated Construction On-Site

	ROG	NOx	CO	SO2	Fugitive PM10	Exhaust PM10	PM10 Total	Fugitive PM2.5	Exhaust PM2.5	PM2.5 Total	Bio- CO2	NBio- CO2	Total CO2	CH4	N2O	CO2e
Category	tons/yr										MT/yr					
Off-Road	0.0291	0.1237	0.2806	7.4000e-004		3.6300e-003	3.6300e-003		3.6300e-003	3.6300e-003	0.0000	62.7716	62.7716	2.3300e-003	0.0000	62.8205
Total	**0.0291**	**0.1237**	**0.2806**	**7.4000e-004**		**3.6300e-003**	**3.6300e-003**		**3.6300e-003**	**3.6300e-003**	**0.0000**	**62.7716**	**62.7716**	**2.3300e-003**	**0.0000**	**62.8205**

Unmitigated Construction Off-Site

	ROG	NOx	CO	SO2	Fugitive PM10	Exhaust PM10	PM10 Total	Fugitive PM2.5	Exhaust PM2.5	PM2.5 Total	Bio- CO2	NBio- CO2	Total CO2	CH4	N2O	CO2e
Category	tons/yr										MT/yr					
Hauling	0.0000	0.0000	0.0000	0.0000	0.0000	0.0000	0.0000	0.0000	0.0000	0.0000	0.0000	0.0000	0.0000	0.0000	0.0000	0.0000
Vendor	0.0000	0.0000	0.0000	0.0000	0.0000	0.0000	0.0000	0.0000	0.0000	0.0000	0.0000	0.0000	0.0000	0.0000	0.0000	0.0000
Worker	0.0000	0.0000	0.0000	0.0000	0.0000	0.0000	0.0000	0.0000	0.0000	0.0000	0.0000	0.0000	0.0000	0.0000	0.0000	0.0000
Total	**0.0000**	**0.0000**	**0.0000**	**0.0000**	**0.0000**	**0.0000**	**0.0000**	**0.0000**	**0.0000**	**0.0000**	**0.0000**	**0.0000**	**0.0000**	**0.0000**	**0.0000**	**0.0000**

3.3 Year 12 Month 2 - 2031

Mitigated Construction On-Site

	ROG	NOx	CO	SO2	Fugitive PM10	Exhaust PM10	PM10 Total	Fugitive PM2.5	Exhaust PM2.5	PM2.5 Total	Bio- CO2	NBio- CO2	Total CO2	CH4	N2O	CO2e
Category	tons/yr										MT/yr					
Off-Road	8.3000e-003	0.0728	0.3629	7.4000e-004		9.7000e-004	9.7000e-004		9.7000e-004	9.7000e-004	0.0000	62.7715	62.7715	2.3300e-003	0.0000	62.8204
Total	**8.3000e-003**	**0.0728**	**0.3629**	**7.4000e-004**		**9.7000e-004**	**9.7000e-004**		**9.7000e-004**	**9.7000e-004**	**0.0000**	**62.7715**	**62.7715**	**2.3300e-003**	**0.0000**	**62.8204**

Mitigated Construction Off-Site

	ROG	NOx	CO	SO2	Fugitive PM10	Exhaust PM10	PM10 Total	Fugitive PM2.5	Exhaust PM2.5	PM2.5 Total	Bio- CO2	NBio- CO2	Total CO2	CH4	N2O	CO2e
Category	tons/yr										MT/yr					
Hauling	0.0000	0.0000	0.0000	0.0000	0.0000	0.0000	0.0000	0.0000	0.0000	0.0000	0.0000	0.0000	0.0000	0.0000	0.0000	0.0000
Vendor	0.0000	0.0000	0.0000	0.0000	0.0000	0.0000	0.0000	0.0000	0.0000	0.0000	0.0000	0.0000	0.0000	0.0000	0.0000	0.0000
Worker	0.0000	0.0000	0.0000	0.0000	0.0000	0.0000	0.0000	0.0000	0.0000	0.0000	0.0000	0.0000	0.0000	0.0000	0.0000	0.0000
Total	**0.0000**	**0.0000**	**0.0000**	**0.0000**	**0.0000**	**0.0000**	**0.0000**	**0.0000**	**0.0000**	**0.0000**	**0.0000**	**0.0000**	**0.0000**	**0.0000**	**0.0000**	**0.0000**

3.4 Year 12 Month 3 - 2031

Unmitigated Construction On-Site

	ROG	NOx	CO	SO2	Fugitive PM10	Exhaust PM10	PM10 Total	Fugitive PM2.5	Exhaust PM2.5	PM2.5 Total	Bio- CO2	NBio- CO2	Total CO2	CH4	N2O	CO2e
Category	tons/yr										MT/yr					
Off-Road	0.0158	0.0707	0.1396	4.0000e-004		1.6900e-003	1.6900e-003		1.6900e-003	1.6900e-003	0.0000	33.0209	33.0209	1.2700e-003	0.0000	33.0476
Total	**0.0158**	**0.0707**	**0.1396**	**4.0000e-004**		**1.6900e-003**	**1.6900e-003**		**1.6900e-003**	**1.6900e-003**	**0.0000**	**33.0209**	**33.0209**	**1.2700e-003**	**0.0000**	**33.0476**

Unmitigated Construction Off-Site

	ROG	NOx	CO	SO2	Fugitive PM10	Exhaust PM10	PM10 Total	Fugitive PM2.5	Exhaust PM2.5	PM2.5 Total	Bio- CO2	NBio- CO2	Total CO2	CH4	N2O	CO2e
Category	tons/yr										MT/yr					
Hauling	0.0000	0.0000	0.0000	0.0000	0.0000	0.0000	0.0000	0.0000	0.0000	0.0000	0.0000	0.0000	0.0000	0.0000	0.0000	0.0000
Vendor	0.0000	0.0000	0.0000	0.0000	0.0000	0.0000	0.0000	0.0000	0.0000	0.0000	0.0000	0.0000	0.0000	0.0000	0.0000	0.0000
Worker	0.0000	0.0000	0.0000	0.0000	0.0000	0.0000	0.0000	0.0000	0.0000	0.0000	0.0000	0.0000	0.0000	0.0000	0.0000	0.0000
Total	**0.0000**	**0.0000**	**0.0000**	**0.0000**	**0.0000**	**0.0000**	**0.0000**	**0.0000**	**0.0000**	**0.0000**	**0.0000**	**0.0000**	**0.0000**	**0.0000**	**0.0000**	**0.0000**

3.4 Year 12 Month 3 - 2031

Mitigated Construction On-Site

	ROG	NOx	CO	SO2	Fugitive PM10	Exhaust PM10	PM10 Total	Fugitive PM2.5	Exhaust PM2.5	PM2.5 Total	Bio- CO2	NBio- CO2	Total CO2	CH4	N2O	CO2e
Category	tons/yr										MT/yr					
Off-Road	4.4900e-003	0.0436	0.1850	4.0000e-004		5.1000e-004	5.1000e-004		5.1000e-004	5.1000e-004	0.0000	33.0209	33.0209	1.2700e-003	0.0000	33.0476
Total	**4.4900e-003**	**0.0436**	**0.1850**	**4.0000e-004**		**5.1000e-004**	**5.1000e-004**		**5.1000e-004**	**5.1000e-004**	**0.0000**	**33.0209**	**33.0209**	**1.2700e-003**	**0.0000**	**33.0476**

Mitigated Construction Off-Site

	ROG	NOx	CO	SO2	Fugitive PM10	Exhaust PM10	PM10 Total	Fugitive PM2.5	Exhaust PM2.5	PM2.5 Total	Bio- CO2	NBio- CO2	Total CO2	CH4	N2O	CO2e
Category	tons/yr										MT/yr					
Hauling	0.0000	0.0000	0.0000	0.0000	0.0000	0.0000	0.0000	0.0000	0.0000	0.0000	0.0000	0.0000	0.0000	0.0000	0.0000	0.0000
Vendor	0.0000	0.0000	0.0000	0.0000	0.0000	0.0000	0.0000	0.0000	0.0000	0.0000	0.0000	0.0000	0.0000	0.0000	0.0000	0.0000
Worker	0.0000	0.0000	0.0000	0.0000	0.0000	0.0000	0.0000	0.0000	0.0000	0.0000	0.0000	0.0000	0.0000	0.0000	0.0000	0.0000
Total	**0.0000**	**0.0000**	**0.0000**	**0.0000**	**0.0000**	**0.0000**	**0.0000**	**0.0000**	**0.0000**	**0.0000**	**0.0000**	**0.0000**	**0.0000**	**0.0000**	**0.0000**	**0.0000**

3.5 Year 12 Month 4 - 2031

Unmitigated Construction On-Site

	ROG	NOx	CO	SO2	Fugitive PM10	Exhaust PM10	PM10 Total	Fugitive PM2.5	Exhaust PM2.5	PM2.5 Total	Bio- CO2	NBio- CO2	Total CO2	CH4	N2O	CO2e
Category	tons/yr										MT/yr					
Off-Road	0.0200	0.0848	0.1611	5.1000e-004		2.1400e-003	2.1400e-003		2.1400e-003	2.1400e-003	0.0000	42.7049	42.7049	1.6100e-003	0.0000	42.7388
Total	**0.0200**	**0.0848**	**0.1611**	**5.1000e-004**		**2.1400e-003**	**2.1400e-003**		**2.1400e-003**	**2.1400e-003**	**0.0000**	**42.7049**	**42.7049**	**1.6100e-003**	**0.0000**	**42.7388**

Unmitigated Construction Off-Site

	ROG	NOx	CO	SO2	Fugitive PM10	Exhaust PM10	PM10 Total	Fugitive PM2.5	Exhaust PM2.5	PM2.5 Total	Bio- CO2	NBio- CO2	Total CO2	CH4	N2O	CO2e
Category	tons/yr										MT/yr					
Hauling	0.0000	0.0000	0.0000	0.0000	0.0000	0.0000	0.0000	0.0000	0.0000	0.0000	0.0000	0.0000	0.0000	0.0000	0.0000	0.0000
Vendor	0.0000	0.0000	0.0000	0.0000	0.0000	0.0000	0.0000	0.0000	0.0000	0.0000	0.0000	0.0000	0.0000	0.0000	0.0000	0.0000
Worker	0.0000	0.0000	0.0000	0.0000	0.0000	0.0000	0.0000	0.0000	0.0000	0.0000	0.0000	0.0000	0.0000	0.0000	0.0000	0.0000
Total	**0.0000**	**0.0000**	**0.0000**	**0.0000**	**0.0000**	**0.0000**	**0.0000**	**0.0000**	**0.0000**	**0.0000**	**0.0000**	**0.0000**	**0.0000**	**0.0000**	**0.0000**	**0.0000**

3.5 Year 12 Month 4 - 2031

Mitigated Construction On-Site

	ROG	NOx	CO	SO2	Fugitive PM10	Exhaust PM10	PM10 Total	Fugitive PM2.5	Exhaust PM2.5	PM2.5 Total	Bio- CO2	NBio- CO2	Total CO2	CH4	N2O	CO2e
Category	tons/yr										MT/yr					
Off-Road	5.6200e-003	0.0485	0.2263	5.1000e-004		6.6000e-004	6.6000e-004		6.6000e-004	6.6000e-004	0.0000	42.7049	42.7049	1.6100e-003	0.0000	42.7388
Total	**5.6200e-003**	**0.0485**	**0.2263**	**5.1000e-004**		**6.6000e-004**	**6.6000e-004**		**6.6000e-004**	**6.6000e-004**	**0.0000**	**42.7049**	**42.7049**	**1.6100e-003**	**0.0000**	**42.7388**

Mitigated Construction Off-Site

	ROG	NOx	CO	SO2	Fugitive PM10	Exhaust PM10	PM10 Total	Fugitive PM2.5	Exhaust PM2.5	PM2.5 Total	Bio- CO2	NBio- CO2	Total CO2	CH4	N2O	CO2e
Category	tons/yr										MT/yr					
Hauling	0.0000	0.0000	0.0000	0.0000	0.0000	0.0000	0.0000	0.0000	0.0000	0.0000	0.0000	0.0000	0.0000	0.0000	0.0000	0.0000
Vendor	0.0000	0.0000	0.0000	0.0000	0.0000	0.0000	0.0000	0.0000	0.0000	0.0000	0.0000	0.0000	0.0000	0.0000	0.0000	0.0000
Worker	0.0000	0.0000	0.0000	0.0000	0.0000	0.0000	0.0000	0.0000	0.0000	0.0000	0.0000	0.0000	0.0000	0.0000	0.0000	0.0000
Total	**0.0000**	**0.0000**	**0.0000**	**0.0000**	**0.0000**	**0.0000**	**0.0000**	**0.0000**	**0.0000**	**0.0000**	**0.0000**	**0.0000**	**0.0000**	**0.0000**	**0.0000**	**0.0000**

3.6 Year 12 Month 5 - 2031

Unmitigated Construction On-Site

	ROG	NOx	CO	SO2	Fugitive PM10	Exhaust PM10	PM10 Total	Fugitive PM2.5	Exhaust PM2.5	PM2.5 Total	Bio- CO2	NBio- CO2	Total CO2	CH4	N2O	CO2e
Category	tons/yr										MT/yr					
Off-Road	0.0164	0.0735	0.1449	4.1000e-004		1.7500e-003	1.7500e-003		1.7500e-003	1.7500e-003	0.0000	34.2909	34.2909	1.3200e-003	0.0000	34.3187
Total	**0.0164**	**0.0735**	**0.1449**	**4.1000e-004**		**1.7500e-003**	**1.7500e-003**		**1.7500e-003**	**1.7500e-003**	**0.0000**	**34.2909**	**34.2909**	**1.3200e-003**	**0.0000**	**34.3187**

Unmitigated Construction Off-Site

	ROG	NOx	CO	SO2	Fugitive PM10	Exhaust PM10	PM10 Total	Fugitive PM2.5	Exhaust PM2.5	PM2.5 Total	Bio- CO2	NBio- CO2	Total CO2	CH4	N2O	CO2e
Category	tons/yr										MT/yr					
Hauling	0.0000	0.0000	0.0000	0.0000	0.0000	0.0000	0.0000	0.0000	0.0000	0.0000	0.0000	0.0000	0.0000	0.0000	0.0000	0.0000
Vendor	0.0000	0.0000	0.0000	0.0000	0.0000	0.0000	0.0000	0.0000	0.0000	0.0000	0.0000	0.0000	0.0000	0.0000	0.0000	0.0000
Worker	0.0000	0.0000	0.0000	0.0000	0.0000	0.0000	0.0000	0.0000	0.0000	0.0000	0.0000	0.0000	0.0000	0.0000	0.0000	0.0000
Total	**0.0000**	**0.0000**	**0.0000**	**0.0000**	**0.0000**	**0.0000**	**0.0000**	**0.0000**	**0.0000**	**0.0000**	**0.0000**	**0.0000**	**0.0000**	**0.0000**	**0.0000**	**0.0000**

3.6 Year 12 Month 5 - 2031

Mitigated Construction On-Site

	ROG	NOx	CO	SO2	Fugitive PM10	Exhaust PM10	PM10 Total	Fugitive PM2.5	Exhaust PM2.5	PM2.5 Total	Bio- CO2	NBio- CO2	Total CO2	CH4	N2O	CO2e
Category	tons/yr										MT/yr					
Off-Road	4.6700e-003	0.0453	0.1921	4.1000e-004		5.3000e-004	5.3000e-004		5.3000e-004	5.3000e-004	0.0000	34.2909	34.2909	1.3200e-003	0.0000	34.3187
Total	**4.6700e-003**	**0.0453**	**0.1921**	**4.1000e-004**		**5.3000e-004**	**5.3000e-004**		**5.3000e-004**	**5.3000e-004**	**0.0000**	**34.2909**	**34.2909**	**1.3200e-003**	**0.0000**	**34.3187**

Mitigated Construction Off-Site

	ROG	NOx	CO	SO2	Fugitive PM10	Exhaust PM10	PM10 Total	Fugitive PM2.5	Exhaust PM2.5	PM2.5 Total	Bio- CO2	NBio- CO2	Total CO2	CH4	N2O	CO2e
Category	tons/yr										MT/yr					
Hauling	0.0000	0.0000	0.0000	0.0000	0.0000	0.0000	0.0000	0.0000	0.0000	0.0000	0.0000	0.0000	0.0000	0.0000	0.0000	0.0000
Vendor	0.0000	0.0000	0.0000	0.0000	0.0000	0.0000	0.0000	0.0000	0.0000	0.0000	0.0000	0.0000	0.0000	0.0000	0.0000	0.0000
Worker	0.0000	0.0000	0.0000	0.0000	0.0000	0.0000	0.0000	0.0000	0.0000	0.0000	0.0000	0.0000	0.0000	0.0000	0.0000	0.0000
Total	**0.0000**	**0.0000**	**0.0000**	**0.0000**	**0.0000**	**0.0000**	**0.0000**	**0.0000**	**0.0000**	**0.0000**	**0.0000**	**0.0000**	**0.0000**	**0.0000**	**0.0000**	**0.0000**

3.7 Year 12 Month 6 - 2031

Unmitigated Construction On-Site

	ROG	NOx	CO	SO2	Fugitive PM10	Exhaust PM10	PM10 Total	Fugitive PM2.5	Exhaust PM2.5	PM2.5 Total	Bio- CO2	NBio- CO2	Total CO2	CH4	N2O	CO2e
Category	tons/yr										MT/yr					
Off-Road	0.0152	0.0680	0.1342	3.8000e-004		1.6200e-003	1.6200e-003		1.6200e-003	1.6200e-003	0.0000	31.7509	31.7509	1.2200e-003	0.0000	31.7766
Total	**0.0152**	**0.0680**	**0.1342**	**3.8000e-004**		**1.6200e-003**	**1.6200e-003**		**1.6200e-003**	**1.6200e-003**	**0.0000**	**31.7509**	**31.7509**	**1.2200e-003**	**0.0000**	**31.7766**

Unmitigated Construction Off-Site

	ROG	NOx	CO	SO2	Fugitive PM10	Exhaust PM10	PM10 Total	Fugitive PM2.5	Exhaust PM2.5	PM2.5 Total	Bio- CO2	NBio- CO2	Total CO2	CH4	N2O	CO2e
Category	tons/yr										MT/yr					
Hauling	0.0000	0.0000	0.0000	0.0000	0.0000	0.0000	0.0000	0.0000	0.0000	0.0000	0.0000	0.0000	0.0000	0.0000	0.0000	0.0000
Vendor	0.0000	0.0000	0.0000	0.0000	0.0000	0.0000	0.0000	0.0000	0.0000	0.0000	0.0000	0.0000	0.0000	0.0000	0.0000	0.0000
Worker	0.0000	0.0000	0.0000	0.0000	0.0000	0.0000	0.0000	0.0000	0.0000	0.0000	0.0000	0.0000	0.0000	0.0000	0.0000	0.0000
Total	**0.0000**	**0.0000**	**0.0000**	**0.0000**	**0.0000**	**0.0000**	**0.0000**	**0.0000**	**0.0000**	**0.0000**	**0.0000**	**0.0000**	**0.0000**	**0.0000**	**0.0000**	**0.0000**

3.7 Year 12 Month 6 - 2031

Mitigated Construction On-Site

	ROG	NOx	CO	SO2	Fugitive PM10	Exhaust PM10	PM10 Total	Fugitive PM2.5	Exhaust PM2.5	PM2.5 Total	Bio- CO2	NBio- CO2	Total CO2	CH4	N2O	CO2e
Category	tons/yr										MT/yr					
Off-Road	4.3200e-003	0.0420	0.1779	3.8000e-004		4.9000e-004	4.9000e-004		4.9000e-004	4.9000e-004	0.0000	31.7508	31.7508	1.2200e-003	0.0000	31.7765
Total	**4.3200e-003**	**0.0420**	**0.1779**	**3.8000e-004**		**4.9000e-004**	**4.9000e-004**		**4.9000e-004**	**4.9000e-004**	**0.0000**	**31.7508**	**31.7508**	**1.2200e-003**	**0.0000**	**31.7765**

Mitigated Construction Off-Site

	ROG	NOx	CO	SO2	Fugitive PM10	Exhaust PM10	PM10 Total	Fugitive PM2.5	Exhaust PM2.5	PM2.5 Total	Bio- CO2	NBio- CO2	Total CO2	CH4	N2O	CO2e
Category	tons/yr										MT/yr					
Hauling	0.0000	0.0000	0.0000	0.0000	0.0000	0.0000	0.0000	0.0000	0.0000	0.0000	0.0000	0.0000	0.0000	0.0000	0.0000	0.0000
Vendor	0.0000	0.0000	0.0000	0.0000	0.0000	0.0000	0.0000	0.0000	0.0000	0.0000	0.0000	0.0000	0.0000	0.0000	0.0000	0.0000
Worker	0.0000	0.0000	0.0000	0.0000	0.0000	0.0000	0.0000	0.0000	0.0000	0.0000	0.0000	0.0000	0.0000	0.0000	0.0000	0.0000
Total	**0.0000**	**0.0000**	**0.0000**	**0.0000**	**0.0000**	**0.0000**	**0.0000**	**0.0000**	**0.0000**	**0.0000**	**0.0000**	**0.0000**	**0.0000**	**0.0000**	**0.0000**	**0.0000**

3.8 Year 12 Month 7 - 2031

Unmitigated Construction On-Site

	ROG	NOx	CO	SO2	Fugitive PM10	Exhaust PM10	PM10 Total	Fugitive PM2.5	Exhaust PM2.5	PM2.5 Total	Bio- CO2	NBio- CO2	Total CO2	CH4	N2O	CO2e
Category	tons/yr										MT/yr					
Off-Road	9.5100e-003	0.0405	0.0979	2.5000e-004		1.0300e-003	1.0300e-003		1.0300e-003	1.0300e-003	0.0000	21.3344	21.3344	7.6000e-004	0.0000	21.3505
Total	**9.5100e-003**	**0.0405**	**0.0979**	**2.5000e-004**		**1.0300e-003**	**1.0300e-003**		**1.0300e-003**	**1.0300e-003**	**0.0000**	**21.3344**	**21.3344**	**7.6000e-004**	**0.0000**	**21.3505**

Unmitigated Construction Off-Site

	ROG	NOx	CO	SO2	Fugitive PM10	Exhaust PM10	PM10 Total	Fugitive PM2.5	Exhaust PM2.5	PM2.5 Total	Bio- CO2	NBio- CO2	Total CO2	CH4	N2O	CO2e
Category	tons/yr										MT/yr					
Hauling	0.0000	0.0000	0.0000	0.0000	0.0000	0.0000	0.0000	0.0000	0.0000	0.0000	0.0000	0.0000	0.0000	0.0000	0.0000	0.0000
Vendor	0.0000	0.0000	0.0000	0.0000	0.0000	0.0000	0.0000	0.0000	0.0000	0.0000	0.0000	0.0000	0.0000	0.0000	0.0000	0.0000
Worker	0.0000	0.0000	0.0000	0.0000	0.0000	0.0000	0.0000	0.0000	0.0000	0.0000	0.0000	0.0000	0.0000	0.0000	0.0000	0.0000
Total	**0.0000**	**0.0000**	**0.0000**	**0.0000**	**0.0000**	**0.0000**	**0.0000**	**0.0000**	**0.0000**	**0.0000**	**0.0000**	**0.0000**	**0.0000**	**0.0000**	**0.0000**	**0.0000**

3.8 Year 12 Month 7 - 2031

Mitigated Construction On-Site

	ROG	NOx	CO	SO2	Fugitive PM10	Exhaust PM10	PM10 Total	Fugitive PM2.5	Exhaust PM2.5	PM2.5 Total	Bio- CO2	NBio- CO2	Total CO2	CH4	N2O	CO2e
Category	tons/yr										MT/yr					
Off-Road	2.8200e-003	0.0248	0.1261	2.5000e-004		3.3000e-004	3.3000e-004		3.3000e-004	3.3000e-004	0.0000	21.3344	21.3344	7.6000e-004	0.0000	21.3504
Total	**2.8200e-003**	**0.0248**	**0.1261**	**2.5000e-004**		**3.3000e-004**	**3.3000e-004**		**3.3000e-004**	**3.3000e-004**	**0.0000**	**21.3344**	**21.3344**	**7.6000e-004**	**0.0000**	**21.3504**

Mitigated Construction Off-Site

	ROG	NOx	CO	SO2	Fugitive PM10	Exhaust PM10	PM10 Total	Fugitive PM2.5	Exhaust PM2.5	PM2.5 Total	Bio- CO2	NBio- CO2	Total CO2	CH4	N2O	CO2e
Category	tons/yr										MT/yr					
Hauling	0.0000	0.0000	0.0000	0.0000	0.0000	0.0000	0.0000	0.0000	0.0000	0.0000	0.0000	0.0000	0.0000	0.0000	0.0000	0.0000
Vendor	0.0000	0.0000	0.0000	0.0000	0.0000	0.0000	0.0000	0.0000	0.0000	0.0000	0.0000	0.0000	0.0000	0.0000	0.0000	0.0000
Worker	0.0000	0.0000	0.0000	0.0000	0.0000	0.0000	0.0000	0.0000	0.0000	0.0000	0.0000	0.0000	0.0000	0.0000	0.0000	0.0000
Total	**0.0000**	**0.0000**	**0.0000**	**0.0000**	**0.0000**	**0.0000**	**0.0000**	**0.0000**	**0.0000**	**0.0000**	**0.0000**	**0.0000**	**0.0000**	**0.0000**	**0.0000**	**0.0000**

3.9 Year 12 Month 8 - 2031

Unmitigated Construction On-Site

	ROG	NOx	CO	SO2	Fugitive PM10	Exhaust PM10	PM10 Total	Fugitive PM2.5	Exhaust PM2.5	PM2.5 Total	Bio- CO2	NBio- CO2	Total CO2	CH4	N2O	CO2e
Category	tons/yr										MT/yr					
Off-Road	0.0834	0.3211	0.5312	2.0300e-003		0.0113	0.0113		0.0113	0.0113	0.0000	186.9092	186.9092	6.6600e-003	0.0000	187.0490
Total	**0.0834**	**0.3211**	**0.5312**	**2.0300e-003**		**0.0113**	**0.0113**		**0.0113**	**0.0113**	**0.0000**	**186.9092**	**186.9092**	**6.6600e-003**	**0.0000**	**187.0490**

Unmitigated Construction Off-Site

	ROG	NOx	CO	SO2	Fugitive PM10	Exhaust PM10	PM10 Total	Fugitive PM2.5	Exhaust PM2.5	PM2.5 Total	Bio- CO2	NBio- CO2	Total CO2	CH4	N2O	CO2e
Category	tons/yr										MT/yr					
Hauling	0.0000	0.0000	0.0000	0.0000	0.0000	0.0000	0.0000	0.0000	0.0000	0.0000	0.0000	0.0000	0.0000	0.0000	0.0000	0.0000
Vendor	0.0000	0.0000	0.0000	0.0000	0.0000	0.0000	0.0000	0.0000	0.0000	0.0000	0.0000	0.0000	0.0000	0.0000	0.0000	0.0000
Worker	0.0000	0.0000	0.0000	0.0000	0.0000	0.0000	0.0000	0.0000	0.0000	0.0000	0.0000	0.0000	0.0000	0.0000	0.0000	0.0000
Total	**0.0000**	**0.0000**	**0.0000**	**0.0000**	**0.0000**	**0.0000**	**0.0000**	**0.0000**	**0.0000**	**0.0000**	**0.0000**	**0.0000**	**0.0000**	**0.0000**	**0.0000**	**0.0000**

3.9 Year 12 Month 8 - 2031

Mitigated Construction On-Site

	ROG	NOx	CO	SO2	Fugitive PM10	Exhaust PM10	PM10 Total	Fugitive PM2.5	Exhaust PM2.5	PM2.5 Total	Bio- CO2	NBio- CO2	Total CO2	CH4	N2O	CO2e
Category	tons/yr										MT/yr					
Off-Road	0.0221	0.1078	0.8783	2.0300e-003		2.9000e-003	2.9000e-003		2.9000e-003	2.9000e-003	0.0000	186.9089	186.9089	6.6600e-003	0.0000	187.0488
Total	**0.0221**	**0.1078**	**0.8783**	**2.0300e-003**		**2.9000e-003**	**2.9000e-003**		**2.9000e-003**	**2.9000e-003**	**0.0000**	**186.9089**	**186.9089**	**6.6600e-003**	**0.0000**	**187.0488**

Mitigated Construction Off-Site

	ROG	NOx	CO	SO2	Fugitive PM10	Exhaust PM10	PM10 Total	Fugitive PM2.5	Exhaust PM2.5	PM2.5 Total	Bio- CO2	NBio- CO2	Total CO2	CH4	N2O	CO2e
Category	tons/yr										MT/yr					
Hauling	0.0000	0.0000	0.0000	0.0000	0.0000	0.0000	0.0000	0.0000	0.0000	0.0000	0.0000	0.0000	0.0000	0.0000	0.0000	0.0000
Vendor	0.0000	0.0000	0.0000	0.0000	0.0000	0.0000	0.0000	0.0000	0.0000	0.0000	0.0000	0.0000	0.0000	0.0000	0.0000	0.0000
Worker	0.0000	0.0000	0.0000	0.0000	0.0000	0.0000	0.0000	0.0000	0.0000	0.0000	0.0000	0.0000	0.0000	0.0000	0.0000	0.0000
Total	**0.0000**	**0.0000**	**0.0000**	**0.0000**	**0.0000**	**0.0000**	**0.0000**	**0.0000**	**0.0000**	**0.0000**	**0.0000**	**0.0000**	**0.0000**	**0.0000**	**0.0000**	**0.0000**

3.10 Year 12 Month 9 - 2031

Unmitigated Construction On-Site

	ROG	NOx	CO	SO2	Fugitive PM10	Exhaust PM10	PM10 Total	Fugitive PM2.5	Exhaust PM2.5	PM2.5 Total	Bio- CO2	NBio- CO2	Total CO2	CH4	N2O	CO2e
Category	tons/yr										MT/yr					
Off-Road	0.0743	0.2821	0.4370	1.7800e-003		0.0103	0.0103		0.0103	0.0103	0.0000	166.3649	166.3649	5.9200e-003	0.0000	166.4893
Total	**0.0743**	**0.2821**	**0.4370**	**1.7800e-003**		**0.0103**	**0.0103**		**0.0103**	**0.0103**	**0.0000**	**166.3649**	**166.3649**	**5.9200e-003**	**0.0000**	**166.4893**

Unmitigated Construction Off-Site

	ROG	NOx	CO	SO2	Fugitive PM10	Exhaust PM10	PM10 Total	Fugitive PM2.5	Exhaust PM2.5	PM2.5 Total	Bio- CO2	NBio- CO2	Total CO2	CH4	N2O	CO2e
Category	tons/yr										MT/yr					
Hauling	0.0000	0.0000	0.0000	0.0000	0.0000	0.0000	0.0000	0.0000	0.0000	0.0000	0.0000	0.0000	0.0000	0.0000	0.0000	0.0000
Vendor	0.0000	0.0000	0.0000	0.0000	0.0000	0.0000	0.0000	0.0000	0.0000	0.0000	0.0000	0.0000	0.0000	0.0000	0.0000	0.0000
Worker	0.0000	0.0000	0.0000	0.0000	0.0000	0.0000	0.0000	0.0000	0.0000	0.0000	0.0000	0.0000	0.0000	0.0000	0.0000	0.0000
Total	**0.0000**	**0.0000**	**0.0000**	**0.0000**	**0.0000**	**0.0000**	**0.0000**	**0.0000**	**0.0000**	**0.0000**	**0.0000**	**0.0000**	**0.0000**	**0.0000**	**0.0000**	**0.0000**

3.10 Year 12 Month 9 - 2031

Mitigated Construction On-Site

	ROG	NOx	CO	SO2	Fugitive PM10	Exhaust PM10	PM10 Total	Fugitive PM2.5	Exhaust PM2.5	PM2.5 Total	Bio- CO2	NBio- CO2	Total CO2	CH4	N2O	CO2e
Category	tons/yr										MT/yr					
Off-Road	0.0194	0.0839	0.7569	1.7800e-003		2.5800e-003	2.5800e-003		2.5800e-003	2.5800e-003	0.0000	166.3647	166.3647	5.9200e-003	0.0000	166.4891
Total	**0.0194**	**0.0839**	**0.7569**	**1.7800e-003**		**2.5800e-003**	**2.5800e-003**		**2.5800e-003**	**2.5800e-003**	**0.0000**	**166.3647**	**166.3647**	**5.9200e-003**	**0.0000**	**166.4891**

Mitigated Construction Off-Site

	ROG	NOx	CO	SO2	Fugitive PM10	Exhaust PM10	PM10 Total	Fugitive PM2.5	Exhaust PM2.5	PM2.5 Total	Bio- CO2	NBio- CO2	Total CO2	CH4	N2O	CO2e
Category	tons/yr										MT/yr					
Hauling	0.0000	0.0000	0.0000	0.0000	0.0000	0.0000	0.0000	0.0000	0.0000	0.0000	0.0000	0.0000	0.0000	0.0000	0.0000	0.0000
Vendor	0.0000	0.0000	0.0000	0.0000	0.0000	0.0000	0.0000	0.0000	0.0000	0.0000	0.0000	0.0000	0.0000	0.0000	0.0000	0.0000
Worker	0.0000	0.0000	0.0000	0.0000	0.0000	0.0000	0.0000	0.0000	0.0000	0.0000	0.0000	0.0000	0.0000	0.0000	0.0000	0.0000
Total	**0.0000**	**0.0000**	**0.0000**	**0.0000**	**0.0000**	**0.0000**	**0.0000**	**0.0000**	**0.0000**	**0.0000**	**0.0000**	**0.0000**	**0.0000**	**0.0000**	**0.0000**	**0.0000**

3.11 Year 12 Month 10 - 2031

Unmitigated Construction On-Site

	ROG	NOx	CO	SO2	Fugitive PM10	Exhaust PM10	PM10 Total	Fugitive PM2.5	Exhaust PM2.5	PM2.5 Total	Bio- CO2	NBio- CO2	Total CO2	CH4	N2O	CO2e
Category	tons/yr										MT/yr					
Off-Road	0.0771	0.2930	0.4538	1.8500e-003		0.0107	0.0107		0.0107	0.0107	0.0000	172.7636	172.7636	6.1500e-003	0.0000	172.8927
Total	**0.0771**	**0.2930**	**0.4538**	**1.8500e-003**		**0.0107**	**0.0107**		**0.0107**	**0.0107**	**0.0000**	**172.7636**	**172.7636**	**6.1500e-003**	**0.0000**	**172.8927**

Unmitigated Construction Off-Site

	ROG	NOx	CO	SO2	Fugitive PM10	Exhaust PM10	PM10 Total	Fugitive PM2.5	Exhaust PM2.5	PM2.5 Total	Bio- CO2	NBio- CO2	Total CO2	CH4	N2O	CO2e
Category	tons/yr										MT/yr					
Hauling	0.0000	0.0000	0.0000	0.0000	0.0000	0.0000	0.0000	0.0000	0.0000	0.0000	0.0000	0.0000	0.0000	0.0000	0.0000	0.0000
Vendor	0.0000	0.0000	0.0000	0.0000	0.0000	0.0000	0.0000	0.0000	0.0000	0.0000	0.0000	0.0000	0.0000	0.0000	0.0000	0.0000
Worker	0.0000	0.0000	0.0000	0.0000	0.0000	0.0000	0.0000	0.0000	0.0000	0.0000	0.0000	0.0000	0.0000	0.0000	0.0000	0.0000
Total	**0.0000**	**0.0000**	**0.0000**	**0.0000**	**0.0000**	**0.0000**	**0.0000**	**0.0000**	**0.0000**	**0.0000**	**0.0000**	**0.0000**	**0.0000**	**0.0000**	**0.0000**	**0.0000**

3.11 Year 12 Month 10 - 2031

Mitigated Construction On-Site

	ROG	NOx	CO	SO2	Fugitive PM10	Exhaust PM10	PM10 Total	Fugitive PM2.5	Exhaust PM2.5	PM2.5 Total	Bio- CO2	NBio- CO2	Total CO2	CH4	N2O	CO2e
Category	tons/yr										MT/yr					
Off-Road	0.0201	0.0871	0.7860	1.8500e-003		2.6800e-003	2.6800e-003		2.6800e-003	2.6800e-003	0.0000	172.7634	172.7634	6.1500e-003	0.0000	172.8925
Total	**0.0201**	**0.0871**	**0.7860**	**1.8500e-003**		**2.6800e-003**	**2.6800e-003**		**2.6800e-003**	**2.6800e-003**	**0.0000**	**172.7634**	**172.7634**	**6.1500e-003**	**0.0000**	**172.8925**

Mitigated Construction Off-Site

	ROG	NOx	CO	SO2	Fugitive PM10	Exhaust PM10	PM10 Total	Fugitive PM2.5	Exhaust PM2.5	PM2.5 Total	Bio- CO2	NBio- CO2	Total CO2	CH4	N2O	CO2e
Category	tons/yr										MT/yr					
Hauling	0.0000	0.0000	0.0000	0.0000	0.0000	0.0000	0.0000	0.0000	0.0000	0.0000	0.0000	0.0000	0.0000	0.0000	0.0000	0.0000
Vendor	0.0000	0.0000	0.0000	0.0000	0.0000	0.0000	0.0000	0.0000	0.0000	0.0000	0.0000	0.0000	0.0000	0.0000	0.0000	0.0000
Worker	0.0000	0.0000	0.0000	0.0000	0.0000	0.0000	0.0000	0.0000	0.0000	0.0000	0.0000	0.0000	0.0000	0.0000	0.0000	0.0000
Total	**0.0000**	**0.0000**	**0.0000**	**0.0000**	**0.0000**	**0.0000**	**0.0000**	**0.0000**	**0.0000**	**0.0000**	**0.0000**	**0.0000**	**0.0000**	**0.0000**	**0.0000**	**0.0000**

3.12 Year 12 Month 11 - 2031

Unmitigated Construction Off-Site

	ROG	NOx	CO	SO2	Fugitive PM10	Exhaust PM10	PM10 Total	Fugitive PM2.5	Exhaust PM2.5	PM2.5 Total	Bio- CO2	NBio- CO2	Total CO2	CH4	N2O	CO2e
Category	tons/yr										MT/yr					
Hauling					0.0000	0.0000	0.0000	0.0000	0.0000	0.0000	0.0000	0.0000	0.0000	0.0000	0.0000	0.0000
Vendor					0.0000	0.0000	0.0000	0.0000	0.0000	0.0000	0.0000	0.0000	0.0000	0.0000	0.0000	0.0000
Worker					0.0000	0.0000	0.0000	0.0000	0.0000	0.0000	0.0000	0.0000	0.0000	0.0000	0.0000	0.0000
Total					**0.0000**	**0.0000**	**0.0000**	**0.0000**	**0.0000**	**0.0000**	**0.0000**	**0.0000**	**0.0000**	**0.0000**	**0.0000**	**0.0000**

Mitigated Construction Off-Site

	ROG	NOx	CO	SO2	Fugitive PM10	Exhaust PM10	PM10 Total	Fugitive PM2.5	Exhaust PM2.5	PM2.5 Total	Bio- CO2	NBio- CO2	Total CO2	CH4	N2O	CO2e
Category	tons/yr										MT/yr					
Hauling					0.0000	0.0000	0.0000	0.0000	0.0000	0.0000	0.0000	0.0000	0.0000	0.0000	0.0000	0.0000
Vendor					0.0000	0.0000	0.0000	0.0000	0.0000	0.0000	0.0000	0.0000	0.0000	0.0000	0.0000	0.0000
Worker					0.0000	0.0000	0.0000	0.0000	0.0000	0.0000	0.0000	0.0000	0.0000	0.0000	0.0000	0.0000
Total					**0.0000**	**0.0000**	**0.0000**	**0.0000**	**0.0000**	**0.0000**	**0.0000**	**0.0000**	**0.0000**	**0.0000**	**0.0000**	**0.0000**

3.13 Year 12 Month 12 - 2031

Unmitigated Construction Off-Site

	ROG	NOx	CO	SO2	Fugitive PM10	Exhaust PM10	PM10 Total	Fugitive PM2.5	Exhaust PM2.5	PM2.5 Total	Bio- CO2	NBio- CO2	Total CO2	CH4	N2O	CO2e
Category	tons/yr										MT/yr					
Hauling					0.0000	0.0000	0.0000	0.0000	0.0000	0.0000	0.0000	0.0000	0.0000	0.0000	0.0000	0.0000
Vendor					0.0000	0.0000	0.0000	0.0000	0.0000	0.0000	0.0000	0.0000	0.0000	0.0000	0.0000	0.0000
Worker					0.0000	0.0000	0.0000	0.0000	0.0000	0.0000	0.0000	0.0000	0.0000	0.0000	0.0000	0.0000
Total					**0.0000**	**0.0000**	**0.0000**	**0.0000**	**0.0000**	**0.0000**	**0.0000**	**0.0000**	**0.0000**	**0.0000**	**0.0000**	**0.0000**

Mitigated Construction Off-Site

	ROG	NOx	CO	SO2	Fugitive PM10	Exhaust PM10	PM10 Total	Fugitive PM2.5	Exhaust PM2.5	PM2.5 Total	Bio- CO2	NBio- CO2	Total CO2	CH4	N2O	CO2e
Category	tons/yr										MT/yr					
Hauling					0.0000	0.0000	0.0000	0.0000	0.0000	0.0000	0.0000	0.0000	0.0000	0.0000	0.0000	0.0000
Vendor					0.0000	0.0000	0.0000	0.0000	0.0000	0.0000	0.0000	0.0000	0.0000	0.0000	0.0000	0.0000
Worker					0.0000	0.0000	0.0000	0.0000	0.0000	0.0000	0.0000	0.0000	0.0000	0.0000	0.0000	0.0000
Total					**0.0000**	**0.0000**	**0.0000**	**0.0000**	**0.0000**	**0.0000**	**0.0000**	**0.0000**	**0.0000**	**0.0000**	**0.0000**	**0.0000**

3.14 Year 13 Month 1 - 2032

Unmitigated Construction On-Site

	ROG	NOx	CO	SO2	Fugitive PM10	Exhaust PM10	PM10 Total	Fugitive PM2.5	Exhaust PM2.5	PM2.5 Total	Bio- CO2	NBio- CO2	Total CO2	CH4	N2O	CO2e
Category	tons/yr										MT/yr					
Off-Road	0.0118	0.0463	0.0926	2.8000e-004		1.8000e-003	1.8000e-003		1.8000e-003	1.8000e-003	0.0000	24.1454	24.1454	9.3000e-004	0.0000	24.1650
Total	**0.0118**	**0.0463**	**0.0926**	**2.8000e-004**		**1.8000e-003**	**1.8000e-003**		**1.8000e-003**	**1.8000e-003**	**0.0000**	**24.1454**	**24.1454**	**9.3000e-004**	**0.0000**	**24.1650**

Unmitigated Construction Off-Site

	ROG	NOx	CO	SO2	Fugitive PM10	Exhaust PM10	PM10 Total	Fugitive PM2.5	Exhaust PM2.5	PM2.5 Total	Bio- CO2	NBio- CO2	Total CO2	CH4	N2O	CO2e
Category	tons/yr										MT/yr					
Hauling	0.0000	0.0000	0.0000	0.0000	0.0000	0.0000	0.0000	0.0000	0.0000	0.0000	0.0000	0.0000	0.0000	0.0000	0.0000	0.0000
Vendor	0.0000	0.0000	0.0000	0.0000	0.0000	0.0000	0.0000	0.0000	0.0000	0.0000	0.0000	0.0000	0.0000	0.0000	0.0000	0.0000
Worker	0.0000	0.0000	0.0000	0.0000	0.0000	0.0000	0.0000	0.0000	0.0000	0.0000	0.0000	0.0000	0.0000	0.0000	0.0000	0.0000
Total	**0.0000**	**0.0000**	**0.0000**	**0.0000**	**0.0000**	**0.0000**	**0.0000**	**0.0000**	**0.0000**	**0.0000**	**0.0000**	**0.0000**	**0.0000**	**0.0000**	**0.0000**	**0.0000**

3.14 Year 13 Month 1 - 2032

Mitigated Construction On-Site

	ROG	NOx	CO	SO2	Fugitive PM10	Exhaust PM10	PM10 Total	Fugitive PM2.5	Exhaust PM2.5	PM2.5 Total	Bio- CO2	NBio- CO2	Total CO2	CH4	N2O	CO2e
Category	tons/yr										MT/yr					
Off-Road	2.8100e-003	0.0122	0.1288	2.8000e-004		3.7000e-004	3.7000e-004		3.7000e-004	3.7000e-004	0.0000	24.1454	24.1454	9.3000e-004	0.0000	24.1650
Total	**2.8100e-003**	**0.0122**	**0.1288**	**2.8000e-004**		**3.7000e-004**	**3.7000e-004**		**3.7000e-004**	**3.7000e-004**	**0.0000**	**24.1454**	**24.1454**	**9.3000e-004**	**0.0000**	**24.1650**

Mitigated Construction Off-Site

	ROG	NOx	CO	SO2	Fugitive PM10	Exhaust PM10	PM10 Total	Fugitive PM2.5	Exhaust PM2.5	PM2.5 Total	Bio- CO2	NBio- CO2	Total CO2	CH4	N2O	CO2e
Category	tons/yr										MT/yr					
Hauling	0.0000	0.0000	0.0000	0.0000	0.0000	0.0000	0.0000	0.0000	0.0000	0.0000	0.0000	0.0000	0.0000	0.0000	0.0000	0.0000
Vendor	0.0000	0.0000	0.0000	0.0000	0.0000	0.0000	0.0000	0.0000	0.0000	0.0000	0.0000	0.0000	0.0000	0.0000	0.0000	0.0000
Worker	0.0000	0.0000	0.0000	0.0000	0.0000	0.0000	0.0000	0.0000	0.0000	0.0000	0.0000	0.0000	0.0000	0.0000	0.0000	0.0000
Total	**0.0000**	**0.0000**	**0.0000**	**0.0000**	**0.0000**	**0.0000**	**0.0000**	**0.0000**	**0.0000**	**0.0000**	**0.0000**	**0.0000**	**0.0000**	**0.0000**	**0.0000**	**0.0000**

3.15 Year 13 Month 2 - 2032

Unmitigated Construction On-Site

	ROG	NOx	CO	SO2	Fugitive PM10	Exhaust PM10	PM10 Total	Fugitive PM2.5	Exhaust PM2.5	PM2.5 Total	Bio- CO2	NBio- CO2	Total CO2	CH4	N2O	CO2e
Category	tons/yr										MT/yr					
Off-Road	0.0268	0.1171	0.2354	6.5000e-004		3.3600e-003	3.3600e-003		3.3600e-003	3.3600e-003	0.0000	55.3246	55.3246	2.1500e-003	0.0000	55.3696
Total	**0.0268**	**0.1171**	**0.2354**	**6.5000e-004**		**3.3600e-003**	**3.3600e-003**		**3.3600e-003**	**3.3600e-003**	**0.0000**	**55.3246**	**55.3246**	**2.1500e-003**	**0.0000**	**55.3696**

Unmitigated Construction Off-Site

	ROG	NOx	CO	SO2	Fugitive PM10	Exhaust PM10	PM10 Total	Fugitive PM2.5	Exhaust PM2.5	PM2.5 Total	Bio- CO2	NBio- CO2	Total CO2	CH4	N2O	CO2e
Category	tons/yr										MT/yr					
Hauling	0.0000	0.0000	0.0000	0.0000	0.0000	0.0000	0.0000	0.0000	0.0000	0.0000	0.0000	0.0000	0.0000	0.0000	0.0000	0.0000
Vendor	0.0000	0.0000	0.0000	0.0000	0.0000	0.0000	0.0000	0.0000	0.0000	0.0000	0.0000	0.0000	0.0000	0.0000	0.0000	0.0000
Worker	0.0000	0.0000	0.0000	0.0000	0.0000	0.0000	0.0000	0.0000	0.0000	0.0000	0.0000	0.0000	0.0000	0.0000	0.0000	0.0000
Total	**0.0000**	**0.0000**	**0.0000**	**0.0000**	**0.0000**	**0.0000**	**0.0000**	**0.0000**	**0.0000**	**0.0000**	**0.0000**	**0.0000**	**0.0000**	**0.0000**	**0.0000**	**0.0000**

3.15 Year 13 Month 2 - 2032

Mitigated Construction On-Site

	ROG	NOx	CO	SO2	Fugitive PM10	Exhaust PM10	PM10 Total	Fugitive PM2.5	Exhaust PM2.5	PM2.5 Total	Bio- CO2	NBio- CO2	Total CO2	CH4	N2O	CO2e
Category	tons/yr										MT/yr					
Off-Road	7.4300e-003	0.0691	0.3095	6.5000e-004		8.6000e-004	8.6000e-004		8.6000e-004	8.6000e-004	0.0000	55.3245	55.3245	2.1500e-003	0.0000	55.3696
Total	**7.4300e-003**	**0.0691**	**0.3095**	**6.5000e-004**		**8.6000e-004**	**8.6000e-004**		**8.6000e-004**	**8.6000e-004**	**0.0000**	**55.3245**	**55.3245**	**2.1500e-003**	**0.0000**	**55.3696**

Mitigated Construction Off-Site

	ROG	NOx	CO	SO2	Fugitive PM10	Exhaust PM10	PM10 Total	Fugitive PM2.5	Exhaust PM2.5	PM2.5 Total	Bio- CO2	NBio- CO2	Total CO2	CH4	N2O	CO2e
Category	tons/yr										MT/yr					
Hauling	0.0000	0.0000	0.0000	0.0000	0.0000	0.0000	0.0000	0.0000	0.0000	0.0000	0.0000	0.0000	0.0000	0.0000	0.0000	0.0000
Vendor	0.0000	0.0000	0.0000	0.0000	0.0000	0.0000	0.0000	0.0000	0.0000	0.0000	0.0000	0.0000	0.0000	0.0000	0.0000	0.0000
Worker	0.0000	0.0000	0.0000	0.0000	0.0000	0.0000	0.0000	0.0000	0.0000	0.0000	0.0000	0.0000	0.0000	0.0000	0.0000	0.0000
Total	**0.0000**	**0.0000**	**0.0000**	**0.0000**	**0.0000**	**0.0000**	**0.0000**	**0.0000**	**0.0000**	**0.0000**	**0.0000**	**0.0000**	**0.0000**	**0.0000**	**0.0000**	**0.0000**

3.16 Year 13 Month 3 - 2032

Unmitigated Construction On-Site

	ROG	NOx	CO	SO2	Fugitive PM10	Exhaust PM10	PM10 Total	Fugitive PM2.5	Exhaust PM2.5	PM2.5 Total	Bio- CO2	NBio- CO2	Total CO2	CH4	N2O	CO2e
Category	tons/yr										MT/yr					
Off-Road	0.0164	0.0735	0.1449	4.1000e-004		1.7500e-003	1.7500e-003		1.7500e-003	1.7500e-003	0.0000	34.2909	34.2909	1.3200e-003	0.0000	34.3187
Total	**0.0164**	**0.0735**	**0.1449**	**4.1000e-004**		**1.7500e-003**	**1.7500e-003**		**1.7500e-003**	**1.7500e-003**	**0.0000**	**34.2909**	**34.2909**	**1.3200e-003**	**0.0000**	**34.3187**

Unmitigated Construction Off-Site

	ROG	NOx	CO	SO2	Fugitive PM10	Exhaust PM10	PM10 Total	Fugitive PM2.5	Exhaust PM2.5	PM2.5 Total	Bio- CO2	NBio- CO2	Total CO2	CH4	N2O	CO2e
Category	tons/yr										MT/yr					
Hauling	0.0000	0.0000	0.0000	0.0000	0.0000	0.0000	0.0000	0.0000	0.0000	0.0000	0.0000	0.0000	0.0000	0.0000	0.0000	0.0000
Vendor	0.0000	0.0000	0.0000	0.0000	0.0000	0.0000	0.0000	0.0000	0.0000	0.0000	0.0000	0.0000	0.0000	0.0000	0.0000	0.0000
Worker	0.0000	0.0000	0.0000	0.0000	0.0000	0.0000	0.0000	0.0000	0.0000	0.0000	0.0000	0.0000	0.0000	0.0000	0.0000	0.0000
Total	**0.0000**	**0.0000**	**0.0000**	**0.0000**	**0.0000**	**0.0000**	**0.0000**	**0.0000**	**0.0000**	**0.0000**	**0.0000**	**0.0000**	**0.0000**	**0.0000**	**0.0000**	**0.0000**

3.16 Year 13 Month 3 - 2032

Mitigated Construction On-Site

	ROG	NOx	CO	SO2	Fugitive PM10	Exhaust PM10	PM10 Total	Fugitive PM2.5	Exhaust PM2.5	PM2.5 Total	Bio- CO2	NBio- CO2	Total CO2	CH4	N2O	CO2e
Category	tons/yr										MT/yr					
Off-Road	4.6700e-003	0.0453	0.1921	4.1000e-004		5.3000e-004	5.3000e-004		5.3000e-004	5.3000e-004	0.0000	34.2909	34.2909	1.3200e-003	0.0000	34.3187
Total	**4.6700e-003**	**0.0453**	**0.1921**	**4.1000e-004**		**5.3000e-004**	**5.3000e-004**		**5.3000e-004**	**5.3000e-004**	**0.0000**	**34.2909**	**34.2909**	**1.3200e-003**	**0.0000**	**34.3187**

Mitigated Construction Off-Site

	ROG	NOx	CO	SO2	Fugitive PM10	Exhaust PM10	PM10 Total	Fugitive PM2.5	Exhaust PM2.5	PM2.5 Total	Bio- CO2	NBio- CO2	Total CO2	CH4	N2O	CO2e
Category	tons/yr										MT/yr					
Hauling	0.0000	0.0000	0.0000	0.0000	0.0000	0.0000	0.0000	0.0000	0.0000	0.0000	0.0000	0.0000	0.0000	0.0000	0.0000	0.0000
Vendor	0.0000	0.0000	0.0000	0.0000	0.0000	0.0000	0.0000	0.0000	0.0000	0.0000	0.0000	0.0000	0.0000	0.0000	0.0000	0.0000
Worker	0.0000	0.0000	0.0000	0.0000	0.0000	0.0000	0.0000	0.0000	0.0000	0.0000	0.0000	0.0000	0.0000	0.0000	0.0000	0.0000
Total	**0.0000**	**0.0000**	**0.0000**	**0.0000**	**0.0000**	**0.0000**	**0.0000**	**0.0000**	**0.0000**	**0.0000**	**0.0000**	**0.0000**	**0.0000**	**0.0000**	**0.0000**	**0.0000**

3.17 Year 13 Month 4 - 2032

Unmitigated Construction On-Site

	ROG	NOx	CO	SO2	Fugitive PM10	Exhaust PM10	PM10 Total	Fugitive PM2.5	Exhaust PM2.5	PM2.5 Total	Bio- CO2	NBio- CO2	Total CO2	CH4	N2O	CO2e
Category	tons/yr										MT/yr					
Off-Road	0.0134	0.0530	0.1158	3.6000e-004		1.4400e-003	1.4400e-003		1.4400e-003	1.4400e-003	0.0000	30.2283	30.2283	1.0800e-003	0.0000	30.2509
Total	**0.0134**	**0.0530**	**0.1158**	**3.6000e-004**		**1.4400e-003**	**1.4400e-003**		**1.4400e-003**	**1.4400e-003**	**0.0000**	**30.2283**	**30.2283**	**1.0800e-003**	**0.0000**	**30.2509**

Unmitigated Construction Off-Site

	ROG	NOx	CO	SO2	Fugitive PM10	Exhaust PM10	PM10 Total	Fugitive PM2.5	Exhaust PM2.5	PM2.5 Total	Bio- CO2	NBio- CO2	Total CO2	CH4	N2O	CO2e
Category	tons/yr										MT/yr					
Hauling	0.0000	0.0000	0.0000	0.0000	0.0000	0.0000	0.0000	0.0000	0.0000	0.0000	0.0000	0.0000	0.0000	0.0000	0.0000	0.0000
Vendor	0.0000	0.0000	0.0000	0.0000	0.0000	0.0000	0.0000	0.0000	0.0000	0.0000	0.0000	0.0000	0.0000	0.0000	0.0000	0.0000
Worker	0.0000	0.0000	0.0000	0.0000	0.0000	0.0000	0.0000	0.0000	0.0000	0.0000	0.0000	0.0000	0.0000	0.0000	0.0000	0.0000
Total	**0.0000**	**0.0000**	**0.0000**	**0.0000**	**0.0000**	**0.0000**	**0.0000**	**0.0000**	**0.0000**	**0.0000**	**0.0000**	**0.0000**	**0.0000**	**0.0000**	**0.0000**	**0.0000**

3.17 Year 13 Month 4 - 2032

Mitigated Construction On-Site

	ROG	NOx	CO	SO2	Fugitive PM10	Exhaust PM10	PM10 Total	Fugitive PM2.5	Exhaust PM2.5	PM2.5 Total	Bio- CO2	NBio- CO2	Total CO2	CH4	N2O	CO2e
Category	tons/yr										MT/yr					
Off-Road	3.8400e-003	0.0287	0.1628	3.6000e-004		4.7000e-004	4.7000e-004		4.7000e-004	4.7000e-004	0.0000	30.2282	30.2282	1.0800e-003	0.0000	30.2509
Total	**3.8400e-003**	**0.0287**	**0.1628**	**3.6000e-004**		**4.7000e-004**	**4.7000e-004**		**4.7000e-004**	**4.7000e-004**	**0.0000**	**30.2282**	**30.2282**	**1.0800e-003**	**0.0000**	**30.2509**

Mitigated Construction Off-Site

	ROG	NOx	CO	SO2	Fugitive PM10	Exhaust PM10	PM10 Total	Fugitive PM2.5	Exhaust PM2.5	PM2.5 Total	Bio- CO2	NBio- CO2	Total CO2	CH4	N2O	CO2e
Category	tons/yr										MT/yr					
Hauling	0.0000	0.0000	0.0000	0.0000	0.0000	0.0000	0.0000	0.0000	0.0000	0.0000	0.0000	0.0000	0.0000	0.0000	0.0000	0.0000
Vendor	0.0000	0.0000	0.0000	0.0000	0.0000	0.0000	0.0000	0.0000	0.0000	0.0000	0.0000	0.0000	0.0000	0.0000	0.0000	0.0000
Worker	0.0000	0.0000	0.0000	0.0000	0.0000	0.0000	0.0000	0.0000	0.0000	0.0000	0.0000	0.0000	0.0000	0.0000	0.0000	0.0000
Total	**0.0000**	**0.0000**	**0.0000**	**0.0000**	**0.0000**	**0.0000**	**0.0000**	**0.0000**	**0.0000**	**0.0000**	**0.0000**	**0.0000**	**0.0000**	**0.0000**	**0.0000**	**0.0000**

3.18 Year 13 Month 5 - 2032

Unmitigated Construction On-Site

	ROG	NOx	CO	SO2	Fugitive PM10	Exhaust PM10	PM10 Total	Fugitive PM2.5	Exhaust PM2.5	PM2.5 Total	Bio- CO2	NBio- CO2	Total CO2	CH4	N2O	CO2e
Category	tons/yr										MT/yr					
Off-Road	9.1600e-003	0.0390	0.0942	2.4000e-004		9.9000e-004	9.9000e-004		9.9000e-004	9.9000e-004	0.0000	20.5442	20.5442	7.4000e-004	0.0000	20.5597
Total	**9.1600e-003**	**0.0390**	**0.0942**	**2.4000e-004**		**9.9000e-004**	**9.9000e-004**		**9.9000e-004**	**9.9000e-004**	**0.0000**	**20.5442**	**20.5442**	**7.4000e-004**	**0.0000**	**20.5597**

Unmitigated Construction Off-Site

	ROG	NOx	CO	SO2	Fugitive PM10	Exhaust PM10	PM10 Total	Fugitive PM2.5	Exhaust PM2.5	PM2.5 Total	Bio- CO2	NBio- CO2	Total CO2	CH4	N2O	CO2e
Category	tons/yr										MT/yr					
Hauling	0.0000	0.0000	0.0000	0.0000	0.0000	0.0000	0.0000	0.0000	0.0000	0.0000	0.0000	0.0000	0.0000	0.0000	0.0000	0.0000
Vendor	0.0000	0.0000	0.0000	0.0000	0.0000	0.0000	0.0000	0.0000	0.0000	0.0000	0.0000	0.0000	0.0000	0.0000	0.0000	0.0000
Worker	0.0000	0.0000	0.0000	0.0000	0.0000	0.0000	0.0000	0.0000	0.0000	0.0000	0.0000	0.0000	0.0000	0.0000	0.0000	0.0000
Total	**0.0000**	**0.0000**	**0.0000**	**0.0000**	**0.0000**	**0.0000**	**0.0000**	**0.0000**	**0.0000**	**0.0000**	**0.0000**	**0.0000**	**0.0000**	**0.0000**	**0.0000**	**0.0000**

3.18 Year 13 Month 5 - 2032

Mitigated Construction On-Site

	ROG	NOx	CO	SO2	Fugitive PM10	Exhaust PM10	PM10 Total	Fugitive PM2.5	Exhaust PM2.5	PM2.5 Total	Bio- CO2	NBio- CO2	Total CO2	CH4	N2O	CO2e
Category	tons/yr										MT/yr					
Off-Road	2.7200e-003	0.0239	0.1214	2.4000e-004		3.2000e-004	3.2000e-004		3.2000e-004	3.2000e-004	0.0000	20.5442	20.5442	7.4000e-004	0.0000	20.5597
Total	**2.7200e-003**	**0.0239**	**0.1214**	**2.4000e-004**		**3.2000e-004**	**3.2000e-004**		**3.2000e-004**	**3.2000e-004**	**0.0000**	**20.5442**	**20.5442**	**7.4000e-004**	**0.0000**	**20.5597**

Mitigated Construction Off-Site

	ROG	NOx	CO	SO2	Fugitive PM10	Exhaust PM10	PM10 Total	Fugitive PM2.5	Exhaust PM2.5	PM2.5 Total	Bio- CO2	NBio- CO2	Total CO2	CH4	N2O	CO2e
Category	tons/yr										MT/yr					
Hauling	0.0000	0.0000	0.0000	0.0000	0.0000	0.0000	0.0000	0.0000	0.0000	0.0000	0.0000	0.0000	0.0000	0.0000	0.0000	0.0000
Vendor	0.0000	0.0000	0.0000	0.0000	0.0000	0.0000	0.0000	0.0000	0.0000	0.0000	0.0000	0.0000	0.0000	0.0000	0.0000	0.0000
Worker	0.0000	0.0000	0.0000	0.0000	0.0000	0.0000	0.0000	0.0000	0.0000	0.0000	0.0000	0.0000	0.0000	0.0000	0.0000	0.0000
Total	**0.0000**	**0.0000**	**0.0000**	**0.0000**	**0.0000**	**0.0000**	**0.0000**	**0.0000**	**0.0000**	**0.0000**	**0.0000**	**0.0000**	**0.0000**	**0.0000**	**0.0000**	**0.0000**

3.19 Year 13 Month 6 - 2032

Unmitigated Construction On-Site

	ROG	NOx	CO	SO2	Fugitive PM10	Exhaust PM10	PM10 Total	Fugitive PM2.5	Exhaust PM2.5	PM2.5 Total	Bio- CO2	NBio- CO2	Total CO2	CH4	N2O	CO2e
Category	tons/yr										MT/yr					
Off-Road	9.1600e-003	0.0390	0.0942	2.4000e-004		9.9000e-004	9.9000e-004		9.9000e-004	9.9000e-004	0.0000	20.5442	20.5442	7.4000e-004	0.0000	20.5597
Total	**9.1600e-003**	**0.0390**	**0.0942**	**2.4000e-004**		**9.9000e-004**	**9.9000e-004**		**9.9000e-004**	**9.9000e-004**	**0.0000**	**20.5442**	**20.5442**	**7.4000e-004**	**0.0000**	**20.5597**

Unmitigated Construction Off-Site

	ROG	NOx	CO	SO2	Fugitive PM10	Exhaust PM10	PM10 Total	Fugitive PM2.5	Exhaust PM2.5	PM2.5 Total	Bio- CO2	NBio- CO2	Total CO2	CH4	N2O	CO2e
Category	tons/yr										MT/yr					
Hauling	0.0000	0.0000	0.0000	0.0000	0.0000	0.0000	0.0000	0.0000	0.0000	0.0000	0.0000	0.0000	0.0000	0.0000	0.0000	0.0000
Vendor	0.0000	0.0000	0.0000	0.0000	0.0000	0.0000	0.0000	0.0000	0.0000	0.0000	0.0000	0.0000	0.0000	0.0000	0.0000	0.0000
Worker	0.0000	0.0000	0.0000	0.0000	0.0000	0.0000	0.0000	0.0000	0.0000	0.0000	0.0000	0.0000	0.0000	0.0000	0.0000	0.0000
Total	**0.0000**	**0.0000**	**0.0000**	**0.0000**	**0.0000**	**0.0000**	**0.0000**	**0.0000**	**0.0000**	**0.0000**	**0.0000**	**0.0000**	**0.0000**	**0.0000**	**0.0000**	**0.0000**

3.19 Year 13 Month 6 - 2032

Mitigated Construction On-Site

	ROG	NOx	CO	SO2	Fugitive PM10	Exhaust PM10	PM10 Total	Fugitive PM2.5	Exhaust PM2.5	PM2.5 Total	Bio- CO2	NBio- CO2	Total CO2	CH4	N2O	CO2e
Category	tons/yr										MT/yr					
Off-Road	2.7200e-003	0.0239	0.1214	2.4000e-004		3.2000e-004	3.2000e-004		3.2000e-004	3.2000e-004	0.0000	20.5442	20.5442	7.4000e-004	0.0000	20.5597
Total	**2.7200e-003**	**0.0239**	**0.1214**	**2.4000e-004**		**3.2000e-004**	**3.2000e-004**		**3.2000e-004**	**3.2000e-004**	**0.0000**	**20.5442**	**20.5442**	**7.4000e-004**	**0.0000**	**20.5597**

Mitigated Construction Off-Site

	ROG	NOx	CO	SO2	Fugitive PM10	Exhaust PM10	PM10 Total	Fugitive PM2.5	Exhaust PM2.5	PM2.5 Total	Bio- CO2	NBio- CO2	Total CO2	CH4	N2O	CO2e
Category	tons/yr										MT/yr					
Hauling	0.0000	0.0000	0.0000	0.0000	0.0000	0.0000	0.0000	0.0000	0.0000	0.0000	0.0000	0.0000	0.0000	0.0000	0.0000	0.0000
Vendor	0.0000	0.0000	0.0000	0.0000	0.0000	0.0000	0.0000	0.0000	0.0000	0.0000	0.0000	0.0000	0.0000	0.0000	0.0000	0.0000
Worker	0.0000	0.0000	0.0000	0.0000	0.0000	0.0000	0.0000	0.0000	0.0000	0.0000	0.0000	0.0000	0.0000	0.0000	0.0000	0.0000
Total	**0.0000**	**0.0000**	**0.0000**	**0.0000**	**0.0000**	**0.0000**	**0.0000**	**0.0000**	**0.0000**	**0.0000**	**0.0000**	**0.0000**	**0.0000**	**0.0000**	**0.0000**	**0.0000**

3.20 Year 13 Month 7 - 2032

Unmitigated Construction On-Site

	ROG	NOx	CO	SO2	Fugitive PM10	Exhaust PM10	PM10 Total	Fugitive PM2.5	Exhaust PM2.5	PM2.5 Total	Bio- CO2	NBio- CO2	Total CO2	CH4	N2O	CO2e
Category	tons/yr										MT/yr					
Off-Road	9.5100e-003	0.0405	0.0979	2.5000e-004		1.0300e-003	1.0300e-003		1.0300e-003	1.0300e-003	0.0000	21.3344	21.3344	7.6000e-004	0.0000	21.3505
Total	**9.5100e-003**	**0.0405**	**0.0979**	**2.5000e-004**		**1.0300e-003**	**1.0300e-003**		**1.0300e-003**	**1.0300e-003**	**0.0000**	**21.3344**	**21.3344**	**7.6000e-004**	**0.0000**	**21.3505**

Unmitigated Construction Off-Site

	ROG	NOx	CO	SO2	Fugitive PM10	Exhaust PM10	PM10 Total	Fugitive PM2.5	Exhaust PM2.5	PM2.5 Total	Bio- CO2	NBio- CO2	Total CO2	CH4	N2O	CO2e
Category	tons/yr										MT/yr					
Hauling	0.0000	0.0000	0.0000	0.0000	0.0000	0.0000	0.0000	0.0000	0.0000	0.0000	0.0000	0.0000	0.0000	0.0000	0.0000	0.0000
Vendor	0.0000	0.0000	0.0000	0.0000	0.0000	0.0000	0.0000	0.0000	0.0000	0.0000	0.0000	0.0000	0.0000	0.0000	0.0000	0.0000
Worker	0.0000	0.0000	0.0000	0.0000	0.0000	0.0000	0.0000	0.0000	0.0000	0.0000	0.0000	0.0000	0.0000	0.0000	0.0000	0.0000
Total	**0.0000**	**0.0000**	**0.0000**	**0.0000**	**0.0000**	**0.0000**	**0.0000**	**0.0000**	**0.0000**	**0.0000**	**0.0000**	**0.0000**	**0.0000**	**0.0000**	**0.0000**	**0.0000**

3.20 Year 13 Month 7 - 2032

Mitigated Construction On-Site

	ROG	NOx	CO	SO2	Fugitive PM10	Exhaust PM10	PM10 Total	Fugitive PM2.5	Exhaust PM2.5	PM2.5 Total	Bio- CO2	NBio- CO2	Total CO2	CH4	N2O	CO2e
Category	tons/yr										MT/yr					
Off-Road	2.8200e-003	0.0248	0.1261	2.5000e-004		3.3000e-004	3.3000e-004		3.3000e-004	3.3000e-004	0.0000	21.3344	21.3344	7.6000e-004	0.0000	21.3504
Total	**2.8200e-003**	**0.0248**	**0.1261**	**2.5000e-004**		**3.3000e-004**	**3.3000e-004**		**3.3000e-004**	**3.3000e-004**	**0.0000**	**21.3344**	**21.3344**	**7.6000e-004**	**0.0000**	**21.3504**

Mitigated Construction Off-Site

	ROG	NOx	CO	SO2	Fugitive PM10	Exhaust PM10	PM10 Total	Fugitive PM2.5	Exhaust PM2.5	PM2.5 Total	Bio- CO2	NBio- CO2	Total CO2	CH4	N2O	CO2e
Category	tons/yr										MT/yr					
Hauling	0.0000	0.0000	0.0000	0.0000	0.0000	0.0000	0.0000	0.0000	0.0000	0.0000	0.0000	0.0000	0.0000	0.0000	0.0000	0.0000
Vendor	0.0000	0.0000	0.0000	0.0000	0.0000	0.0000	0.0000	0.0000	0.0000	0.0000	0.0000	0.0000	0.0000	0.0000	0.0000	0.0000
Worker	0.0000	0.0000	0.0000	0.0000	0.0000	0.0000	0.0000	0.0000	0.0000	0.0000	0.0000	0.0000	0.0000	0.0000	0.0000	0.0000
Total	**0.0000**	**0.0000**	**0.0000**	**0.0000**	**0.0000**	**0.0000**	**0.0000**	**0.0000**	**0.0000**	**0.0000**	**0.0000**	**0.0000**	**0.0000**	**0.0000**	**0.0000**	**0.0000**

3.21 Year 13 Month 8 - 2032

Unmitigated Construction On-Site

	ROG	NOx	CO	SO2	Fugitive PM10	Exhaust PM10	PM10 Total	Fugitive PM2.5	Exhaust PM2.5	PM2.5 Total	Bio- CO2	NBio- CO2	Total CO2	CH4	N2O	CO2e
Category	tons/yr										MT/yr					
Off-Road	9.1600e-003	0.0390	0.0942	2.4000e-004		9.9000e-004	9.9000e-004		9.9000e-004	9.9000e-004	0.0000	20.5442	20.5442	7.4000e-004	0.0000	20.5597
Total	**9.1600e-003**	**0.0390**	**0.0942**	**2.4000e-004**		**9.9000e-004**	**9.9000e-004**		**9.9000e-004**	**9.9000e-004**	**0.0000**	**20.5442**	**20.5442**	**7.4000e-004**	**0.0000**	**20.5597**

Unmitigated Construction Off-Site

	ROG	NOx	CO	SO2	Fugitive PM10	Exhaust PM10	PM10 Total	Fugitive PM2.5	Exhaust PM2.5	PM2.5 Total	Bio- CO2	NBio- CO2	Total CO2	CH4	N2O	CO2e
Category	tons/yr										MT/yr					
Hauling	0.0000	0.0000	0.0000	0.0000	0.0000	0.0000	0.0000	0.0000	0.0000	0.0000	0.0000	0.0000	0.0000	0.0000	0.0000	0.0000
Vendor	0.0000	0.0000	0.0000	0.0000	0.0000	0.0000	0.0000	0.0000	0.0000	0.0000	0.0000	0.0000	0.0000	0.0000	0.0000	0.0000
Worker	0.0000	0.0000	0.0000	0.0000	0.0000	0.0000	0.0000	0.0000	0.0000	0.0000	0.0000	0.0000	0.0000	0.0000	0.0000	0.0000
Total	**0.0000**	**0.0000**	**0.0000**	**0.0000**	**0.0000**	**0.0000**	**0.0000**	**0.0000**	**0.0000**	**0.0000**	**0.0000**	**0.0000**	**0.0000**	**0.0000**	**0.0000**	**0.0000**

3.21 Year 13 Month 8 - 2032

Mitigated Construction On-Site

	ROG	NOx	CO	SO2	Fugitive PM10	Exhaust PM10	PM10 Total	Fugitive PM2.5	Exhaust PM2.5	PM2.5 Total	Bio- CO2	NBio- CO2	Total CO2	CH4	N2O	CO2e
Category	tons/yr										MT/yr					
Off-Road	2.7200e-003	0.0239	0.1214	2.4000e-004		3.2000e-004	3.2000e-004		3.2000e-004	3.2000e-004	0.0000	20.5442	20.5442	7.4000e-004	0.0000	20.5597
Total	**2.7200e-003**	**0.0239**	**0.1214**	**2.4000e-004**		**3.2000e-004**	**3.2000e-004**		**3.2000e-004**	**3.2000e-004**	**0.0000**	**20.5442**	**20.5442**	**7.4000e-004**	**0.0000**	**20.5597**

Mitigated Construction Off-Site

	ROG	NOx	CO	SO2	Fugitive PM10	Exhaust PM10	PM10 Total	Fugitive PM2.5	Exhaust PM2.5	PM2.5 Total	Bio- CO2	NBio- CO2	Total CO2	CH4	N2O	CO2e
Category	tons/yr										MT/yr					
Hauling	0.0000	0.0000	0.0000	0.0000	0.0000	0.0000	0.0000	0.0000	0.0000	0.0000	0.0000	0.0000	0.0000	0.0000	0.0000	0.0000
Vendor	0.0000	0.0000	0.0000	0.0000	0.0000	0.0000	0.0000	0.0000	0.0000	0.0000	0.0000	0.0000	0.0000	0.0000	0.0000	0.0000
Worker	0.0000	0.0000	0.0000	0.0000	0.0000	0.0000	0.0000	0.0000	0.0000	0.0000	0.0000	0.0000	0.0000	0.0000	0.0000	0.0000
Total	**0.0000**	**0.0000**	**0.0000**	**0.0000**	**0.0000**	**0.0000**	**0.0000**	**0.0000**	**0.0000**	**0.0000**	**0.0000**	**0.0000**	**0.0000**	**0.0000**	**0.0000**	**0.0000**

3.22 Year 13 Month 9 - 2032

Unmitigated Construction Off-Site

	ROG	NOx	CO	SO2	Fugitive PM10	Exhaust PM10	PM10 Total	Fugitive PM2.5	Exhaust PM2.5	PM2.5 Total	Bio- CO2	NBio- CO2	Total CO2	CH4	N2O	CO2e
Category	tons/yr										MT/yr					
Hauling					0.0000	0.0000	0.0000	0.0000	0.0000	0.0000	0.0000	0.0000	0.0000	0.0000	0.0000	0.0000
Vendor					0.0000	0.0000	0.0000	0.0000	0.0000	0.0000	0.0000	0.0000	0.0000	0.0000	0.0000	0.0000
Worker					0.0000	0.0000	0.0000	0.0000	0.0000	0.0000	0.0000	0.0000	0.0000	0.0000	0.0000	0.0000
Total					**0.0000**	**0.0000**	**0.0000**	**0.0000**	**0.0000**	**0.0000**	**0.0000**	**0.0000**	**0.0000**	**0.0000**	**0.0000**	**0.0000**

Mitigated Construction Off-Site

	ROG	NOx	CO	SO2	Fugitive PM10	Exhaust PM10	PM10 Total	Fugitive PM2.5	Exhaust PM2.5	PM2.5 Total	Bio- CO2	NBio- CO2	Total CO2	CH4	N2O	CO2e
Category	tons/yr										MT/yr					
Hauling					0.0000	0.0000	0.0000	0.0000	0.0000	0.0000	0.0000	0.0000	0.0000	0.0000	0.0000	0.0000
Vendor					0.0000	0.0000	0.0000	0.0000	0.0000	0.0000	0.0000	0.0000	0.0000	0.0000	0.0000	0.0000
Worker					0.0000	0.0000	0.0000	0.0000	0.0000	0.0000	0.0000	0.0000	0.0000	0.0000	0.0000	0.0000
Total					**0.0000**	**0.0000**	**0.0000**	**0.0000**	**0.0000**	**0.0000**	**0.0000**	**0.0000**	**0.0000**	**0.0000**	**0.0000**	**0.0000**

3.23 Year 13 Month 10 - 2032

Unmitigated Construction Off-Site

	ROG	NOx	CO	SO2	Fugitive PM10	Exhaust PM10	PM10 Total	Fugitive PM2.5	Exhaust PM2.5	PM2.5 Total	Bio- CO2	NBio- CO2	Total CO2	CH4	N2O	CO2e
Category	tons/yr										MT/yr					
Hauling					0.0000	0.0000	0.0000	0.0000	0.0000	0.0000	0.0000	0.0000	0.0000	0.0000	0.0000	0.0000
Vendor					0.0000	0.0000	0.0000	0.0000	0.0000	0.0000	0.0000	0.0000	0.0000	0.0000	0.0000	0.0000
Worker					0.0000	0.0000	0.0000	0.0000	0.0000	0.0000	0.0000	0.0000	0.0000	0.0000	0.0000	0.0000
Total					**0.0000**	**0.0000**	**0.0000**	**0.0000**	**0.0000**	**0.0000**	**0.0000**	**0.0000**	**0.0000**	**0.0000**	**0.0000**	**0.0000**

Mitigated Construction Off-Site

	ROG	NOx	CO	SO2	Fugitive PM10	Exhaust PM10	PM10 Total	Fugitive PM2.5	Exhaust PM2.5	PM2.5 Total	Bio- CO2	NBio- CO2	Total CO2	CH4	N2O	CO2e
Category	tons/yr										MT/yr					
Hauling					0.0000	0.0000	0.0000	0.0000	0.0000	0.0000	0.0000	0.0000	0.0000	0.0000	0.0000	0.0000
Vendor					0.0000	0.0000	0.0000	0.0000	0.0000	0.0000	0.0000	0.0000	0.0000	0.0000	0.0000	0.0000
Worker					0.0000	0.0000	0.0000	0.0000	0.0000	0.0000	0.0000	0.0000	0.0000	0.0000	0.0000	0.0000
Total					**0.0000**	**0.0000**	**0.0000**	**0.0000**	**0.0000**	**0.0000**	**0.0000**	**0.0000**	**0.0000**	**0.0000**	**0.0000**	**0.0000**

3.24 Year 13 Month 11 - 2032

Unmitigated Construction Off-Site

	ROG	NOx	CO	SO2	Fugitive PM10	Exhaust PM10	PM10 Total	Fugitive PM2.5	Exhaust PM2.5	PM2.5 Total	Bio- CO2	NBio- CO2	Total CO2	CH4	N2O	CO2e
Category	tons/yr										MT/yr					
Hauling					0.0000	0.0000	0.0000	0.0000	0.0000	0.0000	0.0000	0.0000	0.0000	0.0000	0.0000	0.0000
Vendor					0.0000	0.0000	0.0000	0.0000	0.0000	0.0000	0.0000	0.0000	0.0000	0.0000	0.0000	0.0000
Worker					0.0000	0.0000	0.0000	0.0000	0.0000	0.0000	0.0000	0.0000	0.0000	0.0000	0.0000	0.0000
Total					**0.0000**	**0.0000**	**0.0000**	**0.0000**	**0.0000**	**0.0000**	**0.0000**	**0.0000**	**0.0000**	**0.0000**	**0.0000**	**0.0000**

Mitigated Construction Off-Site

	ROG	NOx	CO	SO2	Fugitive PM10	Exhaust PM10	PM10 Total	Fugitive PM2.5	Exhaust PM2.5	PM2.5 Total	Bio- CO2	NBio- CO2	Total CO2	CH4	N2O	CO2e
Category	tons/yr										MT/yr					
Hauling					0.0000	0.0000	0.0000	0.0000	0.0000	0.0000	0.0000	0.0000	0.0000	0.0000	0.0000	0.0000
Vendor					0.0000	0.0000	0.0000	0.0000	0.0000	0.0000	0.0000	0.0000	0.0000	0.0000	0.0000	0.0000
Worker					0.0000	0.0000	0.0000	0.0000	0.0000	0.0000	0.0000	0.0000	0.0000	0.0000	0.0000	0.0000
Total					**0.0000**	**0.0000**	**0.0000**	**0.0000**	**0.0000**	**0.0000**	**0.0000**	**0.0000**	**0.0000**	**0.0000**	**0.0000**	**0.0000**

3.25 Year 13 Month 12 - 2032

Unmitigated Construction Off-Site

	ROG	NOx	CO	SO2	Fugitive PM10	Exhaust PM10	PM10 Total	Fugitive PM2.5	Exhaust PM2.5	PM2.5 Total	Bio- CO2	NBio- CO2	Total CO2	CH4	N2O	CO2e
Category	tons/yr										MT/yr					
Hauling					0.0000	0.0000	0.0000	0.0000	0.0000	0.0000	0.0000	0.0000	0.0000	0.0000	0.0000	0.0000
Vendor					0.0000	0.0000	0.0000	0.0000	0.0000	0.0000	0.0000	0.0000	0.0000	0.0000	0.0000	0.0000
Worker					0.0000	0.0000	0.0000	0.0000	0.0000	0.0000	0.0000	0.0000	0.0000	0.0000	0.0000	0.0000
Total					**0.0000**	**0.0000**	**0.0000**	**0.0000**	**0.0000**	**0.0000**	**0.0000**	**0.0000**	**0.0000**	**0.0000**	**0.0000**	**0.0000**

Mitigated Construction Off-Site

	ROG	NOx	CO	SO2	Fugitive PM10	Exhaust PM10	PM10 Total	Fugitive PM2.5	Exhaust PM2.5	PM2.5 Total	Bio- CO2	NBio- CO2	Total CO2	CH4	N2O	CO2e
Category	tons/yr										MT/yr					
Hauling					0.0000	0.0000	0.0000	0.0000	0.0000	0.0000	0.0000	0.0000	0.0000	0.0000	0.0000	0.0000
Vendor					0.0000	0.0000	0.0000	0.0000	0.0000	0.0000	0.0000	0.0000	0.0000	0.0000	0.0000	0.0000
Worker					0.0000	0.0000	0.0000	0.0000	0.0000	0.0000	0.0000	0.0000	0.0000	0.0000	0.0000	0.0000
Total					**0.0000**	**0.0000**	**0.0000**	**0.0000**	**0.0000**	**0.0000**	**0.0000**	**0.0000**	**0.0000**	**0.0000**	**0.0000**	**0.0000**

3.26 Year 14 Month 1 - 2033

Unmitigated Construction Off-Site

	ROG	NOx	CO	SO2	Fugitive PM10	Exhaust PM10	PM10 Total	Fugitive PM2.5	Exhaust PM2.5	PM2.5 Total	Bio- CO2	NBio- CO2	Total CO2	CH4	N2O	CO2e
Category	tons/yr										MT/yr					
Hauling					0.0000	0.0000	0.0000	0.0000	0.0000	0.0000	0.0000	0.0000	0.0000	0.0000	0.0000	0.0000
Vendor					0.0000	0.0000	0.0000	0.0000	0.0000	0.0000	0.0000	0.0000	0.0000	0.0000	0.0000	0.0000
Worker					0.0000	0.0000	0.0000	0.0000	0.0000	0.0000	0.0000	0.0000	0.0000	0.0000	0.0000	0.0000
Total					**0.0000**	**0.0000**	**0.0000**	**0.0000**	**0.0000**	**0.0000**	**0.0000**	**0.0000**	**0.0000**	**0.0000**	**0.0000**	**0.0000**

Mitigated Construction Off-Site

	ROG	NOx	CO	SO2	Fugitive PM10	Exhaust PM10	PM10 Total	Fugitive PM2.5	Exhaust PM2.5	PM2.5 Total	Bio- CO2	NBio- CO2	Total CO2	CH4	N2O	CO2e
Category	tons/yr										MT/yr					
Hauling					0.0000	0.0000	0.0000	0.0000	0.0000	0.0000	0.0000	0.0000	0.0000	0.0000	0.0000	0.0000
Vendor					0.0000	0.0000	0.0000	0.0000	0.0000	0.0000	0.0000	0.0000	0.0000	0.0000	0.0000	0.0000
Worker					0.0000	0.0000	0.0000	0.0000	0.0000	0.0000	0.0000	0.0000	0.0000	0.0000	0.0000	0.0000
Total					**0.0000**	**0.0000**	**0.0000**	**0.0000**	**0.0000**	**0.0000**	**0.0000**	**0.0000**	**0.0000**	**0.0000**	**0.0000**	**0.0000**

3.27 Year 14 Month 2 - 2033

Unmitigated Construction Off-Site

	ROG	NOx	CO	SO2	Fugitive PM10	Exhaust PM10	PM10 Total	Fugitive PM2.5	Exhaust PM2.5	PM2.5 Total	Bio- CO2	NBio- CO2	Total CO2	CH4	N2O	CO2e
Category	tons/yr										MT/yr					
Hauling					0.0000	0.0000	0.0000	0.0000	0.0000	0.0000	0.0000	0.0000	0.0000	0.0000	0.0000	0.0000
Vendor					0.0000	0.0000	0.0000	0.0000	0.0000	0.0000	0.0000	0.0000	0.0000	0.0000	0.0000	0.0000
Worker					0.0000	0.0000	0.0000	0.0000	0.0000	0.0000	0.0000	0.0000	0.0000	0.0000	0.0000	0.0000
Total					**0.0000**	**0.0000**	**0.0000**	**0.0000**	**0.0000**	**0.0000**	**0.0000**	**0.0000**	**0.0000**	**0.0000**	**0.0000**	**0.0000**

Mitigated Construction Off-Site

	ROG	NOx	CO	SO2	Fugitive PM10	Exhaust PM10	PM10 Total	Fugitive PM2.5	Exhaust PM2.5	PM2.5 Total	Bio- CO2	NBio- CO2	Total CO2	CH4	N2O	CO2e
Category	tons/yr										MT/yr					
Hauling					0.0000	0.0000	0.0000	0.0000	0.0000	0.0000	0.0000	0.0000	0.0000	0.0000	0.0000	0.0000
Vendor					0.0000	0.0000	0.0000	0.0000	0.0000	0.0000	0.0000	0.0000	0.0000	0.0000	0.0000	0.0000
Worker					0.0000	0.0000	0.0000	0.0000	0.0000	0.0000	0.0000	0.0000	0.0000	0.0000	0.0000	0.0000
Total					**0.0000**	**0.0000**	**0.0000**	**0.0000**	**0.0000**	**0.0000**	**0.0000**	**0.0000**	**0.0000**	**0.0000**	**0.0000**	**0.0000**

3.28 Year 14 Month 3 - 2033

Unmitigated Construction Off-Site

	ROG	NOx	CO	SO2	Fugitive PM10	Exhaust PM10	PM10 Total	Fugitive PM2.5	Exhaust PM2.5	PM2.5 Total	Bio- CO2	NBio- CO2	Total CO2	CH4	N2O	CO2e
Category	tons/yr										MT/yr					
Hauling					0.0000	0.0000	0.0000	0.0000	0.0000	0.0000	0.0000	0.0000	0.0000	0.0000	0.0000	0.0000
Vendor					0.0000	0.0000	0.0000	0.0000	0.0000	0.0000	0.0000	0.0000	0.0000	0.0000	0.0000	0.0000
Worker					0.0000	0.0000	0.0000	0.0000	0.0000	0.0000	0.0000	0.0000	0.0000	0.0000	0.0000	0.0000
Total					**0.0000**	**0.0000**	**0.0000**	**0.0000**	**0.0000**	**0.0000**	**0.0000**	**0.0000**	**0.0000**	**0.0000**	**0.0000**	**0.0000**

Mitigated Construction Off-Site

	ROG	NOx	CO	SO2	Fugitive PM10	Exhaust PM10	PM10 Total	Fugitive PM2.5	Exhaust PM2.5	PM2.5 Total	Bio- CO2	NBio- CO2	Total CO2	CH4	N2O	CO2e
Category	tons/yr										MT/yr					
Hauling					0.0000	0.0000	0.0000	0.0000	0.0000	0.0000	0.0000	0.0000	0.0000	0.0000	0.0000	0.0000
Vendor					0.0000	0.0000	0.0000	0.0000	0.0000	0.0000	0.0000	0.0000	0.0000	0.0000	0.0000	0.0000
Worker					0.0000	0.0000	0.0000	0.0000	0.0000	0.0000	0.0000	0.0000	0.0000	0.0000	0.0000	0.0000
Total					**0.0000**	**0.0000**	**0.0000**	**0.0000**	**0.0000**	**0.0000**	**0.0000**	**0.0000**	**0.0000**	**0.0000**	**0.0000**	**0.0000**

3.29 Year 14 Month 4 - 2033

Unmitigated Construction On-Site

	ROG	NOx	CO	SO2	Fugitive PM10	Exhaust PM10	PM10 Total	Fugitive PM2.5	Exhaust PM2.5	PM2.5 Total	Bio- CO2	NBio- CO2	Total CO2	CH4	N2O	CO2e
Category	tons/yr										MT/yr					
Off-Road	4.2100e-003	0.0141	0.0216	1.1000e-004		4.5000e-004	4.5000e-004		4.5000e-004	4.5000e-004	0.0000	9.6840	9.6840	3.4000e-004	0.0000	9.6912
Total	**4.2100e-003**	**0.0141**	**0.0216**	**1.1000e-004**		**4.5000e-004**	**4.5000e-004**		**4.5000e-004**	**4.5000e-004**	**0.0000**	**9.6840**	**9.6840**	**3.4000e-004**	**0.0000**	**9.6912**

Unmitigated Construction Off-Site

	ROG	NOx	CO	SO2	Fugitive PM10	Exhaust PM10	PM10 Total	Fugitive PM2.5	Exhaust PM2.5	PM2.5 Total	Bio- CO2	NBio- CO2	Total CO2	CH4	N2O	CO2e
Category	tons/yr										MT/yr					
Hauling	0.0000	0.0000	0.0000	0.0000	0.0000	0.0000	0.0000	0.0000	0.0000	0.0000	0.0000	0.0000	0.0000	0.0000	0.0000	0.0000
Vendor	0.0000	0.0000	0.0000	0.0000	0.0000	0.0000	0.0000	0.0000	0.0000	0.0000	0.0000	0.0000	0.0000	0.0000	0.0000	0.0000
Worker	0.0000	0.0000	0.0000	0.0000	0.0000	0.0000	0.0000	0.0000	0.0000	0.0000	0.0000	0.0000	0.0000	0.0000	0.0000	0.0000
Total	**0.0000**	**0.0000**	**0.0000**	**0.0000**	**0.0000**	**0.0000**	**0.0000**	**0.0000**	**0.0000**	**0.0000**	**0.0000**	**0.0000**	**0.0000**	**0.0000**	**0.0000**	**0.0000**

3.29 Year 14 Month 4 - 2033

Mitigated Construction On-Site

	ROG	NOx	CO	SO2	Fugitive PM10	Exhaust PM10	PM10 Total	Fugitive PM2.5	Exhaust PM2.5	PM2.5 Total	Bio- CO2	NBio- CO2	Total CO2	CH4	N2O	CO2e
Category	tons/yr										MT/yr					
Off-Road	1.1300e-003	4.8800e-003	0.0413	1.1000e-004		1.5000e-004	1.5000e-004		1.5000e-004	1.5000e-004	0.0000	9.6840	9.6840	3.4000e-004	0.0000	9.6912
Total	**1.1300e-003**	**4.8800e-003**	**0.0413**	**1.1000e-004**		**1.5000e-004**	**1.5000e-004**		**1.5000e-004**	**1.5000e-004**	**0.0000**	**9.6840**	**9.6840**	**3.4000e-004**	**0.0000**	**9.6912**

Mitigated Construction Off-Site

	ROG	NOx	CO	SO2	Fugitive PM10	Exhaust PM10	PM10 Total	Fugitive PM2.5	Exhaust PM2.5	PM2.5 Total	Bio- CO2	NBio- CO2	Total CO2	CH4	N2O	CO2e
Category	tons/yr										MT/yr					
Hauling	0.0000	0.0000	0.0000	0.0000	0.0000	0.0000	0.0000	0.0000	0.0000	0.0000	0.0000	0.0000	0.0000	0.0000	0.0000	0.0000
Vendor	0.0000	0.0000	0.0000	0.0000	0.0000	0.0000	0.0000	0.0000	0.0000	0.0000	0.0000	0.0000	0.0000	0.0000	0.0000	0.0000
Worker	0.0000	0.0000	0.0000	0.0000	0.0000	0.0000	0.0000	0.0000	0.0000	0.0000	0.0000	0.0000	0.0000	0.0000	0.0000	0.0000
Total	**0.0000**	**0.0000**	**0.0000**	**0.0000**	**0.0000**	**0.0000**	**0.0000**	**0.0000**	**0.0000**	**0.0000**	**0.0000**	**0.0000**	**0.0000**	**0.0000**	**0.0000**	**0.0000**

3.30 Year 14 Month 5 - 2033

Unmitigated Construction Off-Site

	ROG	NOx	CO	SO2	Fugitive PM10	Exhaust PM10	PM10 Total	Fugitive PM2.5	Exhaust PM2.5	PM2.5 Total	Bio- CO2	NBio- CO2	Total CO2	CH4	N2O	CO2e
Category	tons/yr										MT/yr					
Hauling					0.0000	0.0000	0.0000	0.0000	0.0000	0.0000	0.0000	0.0000	0.0000	0.0000	0.0000	0.0000
Vendor					0.0000	0.0000	0.0000	0.0000	0.0000	0.0000	0.0000	0.0000	0.0000	0.0000	0.0000	0.0000
Worker					0.0000	0.0000	0.0000	0.0000	0.0000	0.0000	0.0000	0.0000	0.0000	0.0000	0.0000	0.0000
Total					**0.0000**	**0.0000**	**0.0000**	**0.0000**	**0.0000**	**0.0000**	**0.0000**	**0.0000**	**0.0000**	**0.0000**	**0.0000**	**0.0000**

Mitigated Construction Off-Site

	ROG	NOx	CO	SO2	Fugitive PM10	Exhaust PM10	PM10 Total	Fugitive PM2.5	Exhaust PM2.5	PM2.5 Total	Bio- CO2	NBio- CO2	Total CO2	CH4	N2O	CO2e
Category	tons/yr										MT/yr					
Hauling					0.0000	0.0000	0.0000	0.0000	0.0000	0.0000	0.0000	0.0000	0.0000	0.0000	0.0000	0.0000
Vendor					0.0000	0.0000	0.0000	0.0000	0.0000	0.0000	0.0000	0.0000	0.0000	0.0000	0.0000	0.0000
Worker					0.0000	0.0000	0.0000	0.0000	0.0000	0.0000	0.0000	0.0000	0.0000	0.0000	0.0000	0.0000
Total					**0.0000**	**0.0000**	**0.0000**	**0.0000**	**0.0000**	**0.0000**	**0.0000**	**0.0000**	**0.0000**	**0.0000**	**0.0000**	**0.0000**

3.31 Year 14 Month 6 - 2033

Unmitigated Construction Off-Site

	ROG	NOx	CO	SO2	Fugitive PM10	Exhaust PM10	PM10 Total	Fugitive PM2.5	Exhaust PM2.5	PM2.5 Total	Bio- CO2	NBio- CO2	Total CO2	CH4	N2O	CO2e
Category	tons/yr										MT/yr					
Hauling					0.0000	0.0000	0.0000	0.0000	0.0000	0.0000	0.0000	0.0000	0.0000	0.0000	0.0000	0.0000
Vendor					0.0000	0.0000	0.0000	0.0000	0.0000	0.0000	0.0000	0.0000	0.0000	0.0000	0.0000	0.0000
Worker					0.0000	0.0000	0.0000	0.0000	0.0000	0.0000	0.0000	0.0000	0.0000	0.0000	0.0000	0.0000
Total					**0.0000**	**0.0000**	**0.0000**	**0.0000**	**0.0000**	**0.0000**	**0.0000**	**0.0000**	**0.0000**	**0.0000**	**0.0000**	**0.0000**

Mitigated Construction Off-Site

	ROG	NOx	CO	SO2	Fugitive PM10	Exhaust PM10	PM10 Total	Fugitive PM2.5	Exhaust PM2.5	PM2.5 Total	Bio- CO2	NBio- CO2	Total CO2	CH4	N2O	CO2e
Category	tons/yr										MT/yr					
Hauling					0.0000	0.0000	0.0000	0.0000	0.0000	0.0000	0.0000	0.0000	0.0000	0.0000	0.0000	0.0000
Vendor					0.0000	0.0000	0.0000	0.0000	0.0000	0.0000	0.0000	0.0000	0.0000	0.0000	0.0000	0.0000
Worker					0.0000	0.0000	0.0000	0.0000	0.0000	0.0000	0.0000	0.0000	0.0000	0.0000	0.0000	0.0000
Total					**0.0000**	**0.0000**	**0.0000**	**0.0000**	**0.0000**	**0.0000**	**0.0000**	**0.0000**	**0.0000**	**0.0000**	**0.0000**	**0.0000**

3.32 Year 14 Month 7 - 2033

Unmitigated Construction Off-Site

	ROG	NOx	CO	SO2	Fugitive PM10	Exhaust PM10	PM10 Total	Fugitive PM2.5	Exhaust PM2.5	PM2.5 Total	Bio- CO2	NBio- CO2	Total CO2	CH4	N2O	CO2e
Category	tons/yr										MT/yr					
Hauling					0.0000	0.0000	0.0000	0.0000	0.0000	0.0000	0.0000	0.0000	0.0000	0.0000	0.0000	0.0000
Vendor					0.0000	0.0000	0.0000	0.0000	0.0000	0.0000	0.0000	0.0000	0.0000	0.0000	0.0000	0.0000
Worker					0.0000	0.0000	0.0000	0.0000	0.0000	0.0000	0.0000	0.0000	0.0000	0.0000	0.0000	0.0000
Total					**0.0000**	**0.0000**	**0.0000**	**0.0000**	**0.0000**	**0.0000**	**0.0000**	**0.0000**	**0.0000**	**0.0000**	**0.0000**	**0.0000**

Mitigated Construction Off-Site

	ROG	NOx	CO	SO2	Fugitive PM10	Exhaust PM10	PM10 Total	Fugitive PM2.5	Exhaust PM2.5	PM2.5 Total	Bio- CO2	NBio- CO2	Total CO2	CH4	N2O	CO2e
Category	tons/yr										MT/yr					
Hauling					0.0000	0.0000	0.0000	0.0000	0.0000	0.0000	0.0000	0.0000	0.0000	0.0000	0.0000	0.0000
Vendor					0.0000	0.0000	0.0000	0.0000	0.0000	0.0000	0.0000	0.0000	0.0000	0.0000	0.0000	0.0000
Worker					0.0000	0.0000	0.0000	0.0000	0.0000	0.0000	0.0000	0.0000	0.0000	0.0000	0.0000	0.0000
Total					**0.0000**	**0.0000**	**0.0000**	**0.0000**	**0.0000**	**0.0000**	**0.0000**	**0.0000**	**0.0000**	**0.0000**	**0.0000**	**0.0000**

3.33 Year 14 Month 8 - 2033

Unmitigated Construction Off-Site

	ROG	NOx	CO	SO2	Fugitive PM10	Exhaust PM10	PM10 Total	Fugitive PM2.5	Exhaust PM2.5	PM2.5 Total	Bio- CO2	NBio- CO2	Total CO2	CH4	N2O	CO2e
Category	tons/yr										MT/yr					
Hauling					0.0000	0.0000	0.0000	0.0000	0.0000	0.0000	0.0000	0.0000	0.0000	0.0000	0.0000	0.0000
Vendor					0.0000	0.0000	0.0000	0.0000	0.0000	0.0000	0.0000	0.0000	0.0000	0.0000	0.0000	0.0000
Worker					0.0000	0.0000	0.0000	0.0000	0.0000	0.0000	0.0000	0.0000	0.0000	0.0000	0.0000	0.0000
Total					**0.0000**	**0.0000**	**0.0000**	**0.0000**	**0.0000**	**0.0000**	**0.0000**	**0.0000**	**0.0000**	**0.0000**	**0.0000**	**0.0000**

Mitigated Construction Off-Site

	ROG	NOx	CO	SO2	Fugitive PM10	Exhaust PM10	PM10 Total	Fugitive PM2.5	Exhaust PM2.5	PM2.5 Total	Bio- CO2	NBio- CO2	Total CO2	CH4	N2O	CO2e
Category	tons/yr										MT/yr					
Hauling					0.0000	0.0000	0.0000	0.0000	0.0000	0.0000	0.0000	0.0000	0.0000	0.0000	0.0000	0.0000
Vendor					0.0000	0.0000	0.0000	0.0000	0.0000	0.0000	0.0000	0.0000	0.0000	0.0000	0.0000	0.0000
Worker					0.0000	0.0000	0.0000	0.0000	0.0000	0.0000	0.0000	0.0000	0.0000	0.0000	0.0000	0.0000
Total					**0.0000**	**0.0000**	**0.0000**	**0.0000**	**0.0000**	**0.0000**	**0.0000**	**0.0000**	**0.0000**	**0.0000**	**0.0000**	**0.0000**

3.34 Year 14 Month 9 - 2033

Unmitigated Construction Off-Site

	ROG	NOx	CO	SO2	Fugitive PM10	Exhaust PM10	PM10 Total	Fugitive PM2.5	Exhaust PM2.5	PM2.5 Total	Bio- CO2	NBio- CO2	Total CO2	CH4	N2O	CO2e
Category	tons/yr										MT/yr					
Hauling					0.0000	0.0000	0.0000	0.0000	0.0000	0.0000	0.0000	0.0000	0.0000	0.0000	0.0000	0.0000
Vendor					0.0000	0.0000	0.0000	0.0000	0.0000	0.0000	0.0000	0.0000	0.0000	0.0000	0.0000	0.0000
Worker					0.0000	0.0000	0.0000	0.0000	0.0000	0.0000	0.0000	0.0000	0.0000	0.0000	0.0000	0.0000
Total					**0.0000**	**0.0000**	**0.0000**	**0.0000**	**0.0000**	**0.0000**	**0.0000**	**0.0000**	**0.0000**	**0.0000**	**0.0000**	**0.0000**

Mitigated Construction Off-Site

	ROG	NOx	CO	SO2	Fugitive PM10	Exhaust PM10	PM10 Total	Fugitive PM2.5	Exhaust PM2.5	PM2.5 Total	Bio- CO2	NBio- CO2	Total CO2	CH4	N2O	CO2e
Category	tons/yr										MT/yr					
Hauling					0.0000	0.0000	0.0000	0.0000	0.0000	0.0000	0.0000	0.0000	0.0000	0.0000	0.0000	0.0000
Vendor					0.0000	0.0000	0.0000	0.0000	0.0000	0.0000	0.0000	0.0000	0.0000	0.0000	0.0000	0.0000
Worker					0.0000	0.0000	0.0000	0.0000	0.0000	0.0000	0.0000	0.0000	0.0000	0.0000	0.0000	0.0000
Total					**0.0000**	**0.0000**	**0.0000**	**0.0000**	**0.0000**	**0.0000**	**0.0000**	**0.0000**	**0.0000**	**0.0000**	**0.0000**	**0.0000**

3.35 Year 14 Month 10 - 2033

Unmitigated Construction Off-Site

	ROG	NOx	CO	SO2	Fugitive PM10	Exhaust PM10	PM10 Total	Fugitive PM2.5	Exhaust PM2.5	PM2.5 Total	Bio- CO2	NBio- CO2	Total CO2	CH4	N2O	CO2e
Category	tons/yr										MT/yr					
Hauling					0.0000	0.0000	0.0000	0.0000	0.0000	0.0000	0.0000	0.0000	0.0000	0.0000	0.0000	0.0000
Vendor					0.0000	0.0000	0.0000	0.0000	0.0000	0.0000	0.0000	0.0000	0.0000	0.0000	0.0000	0.0000
Worker					0.0000	0.0000	0.0000	0.0000	0.0000	0.0000	0.0000	0.0000	0.0000	0.0000	0.0000	0.0000
Total					**0.0000**	**0.0000**	**0.0000**	**0.0000**	**0.0000**	**0.0000**	**0.0000**	**0.0000**	**0.0000**	**0.0000**	**0.0000**	**0.0000**

Mitigated Construction Off-Site

	ROG	NOx	CO	SO2	Fugitive PM10	Exhaust PM10	PM10 Total	Fugitive PM2.5	Exhaust PM2.5	PM2.5 Total	Bio- CO2	NBio- CO2	Total CO2	CH4	N2O	CO2e
Category	tons/yr										MT/yr					
Hauling					0.0000	0.0000	0.0000	0.0000	0.0000	0.0000	0.0000	0.0000	0.0000	0.0000	0.0000	0.0000
Vendor					0.0000	0.0000	0.0000	0.0000	0.0000	0.0000	0.0000	0.0000	0.0000	0.0000	0.0000	0.0000
Worker					0.0000	0.0000	0.0000	0.0000	0.0000	0.0000	0.0000	0.0000	0.0000	0.0000	0.0000	0.0000
Total					**0.0000**	**0.0000**	**0.0000**	**0.0000**	**0.0000**	**0.0000**	**0.0000**	**0.0000**	**0.0000**	**0.0000**	**0.0000**	**0.0000**

3.36 Year 14 Month 11 - 2033

Unmitigated Construction Off-Site

	ROG	NOx	CO	SO2	Fugitive PM10	Exhaust PM10	PM10 Total	Fugitive PM2.5	Exhaust PM2.5	PM2.5 Total	Bio- CO2	NBio- CO2	Total CO2	CH4	N2O	CO2e
Category	tons/yr										MT/yr					
Hauling					0.0000	0.0000	0.0000	0.0000	0.0000	0.0000	0.0000	0.0000	0.0000	0.0000	0.0000	0.0000
Vendor					0.0000	0.0000	0.0000	0.0000	0.0000	0.0000	0.0000	0.0000	0.0000	0.0000	0.0000	0.0000
Worker					0.0000	0.0000	0.0000	0.0000	0.0000	0.0000	0.0000	0.0000	0.0000	0.0000	0.0000	0.0000
Total					**0.0000**	**0.0000**	**0.0000**	**0.0000**	**0.0000**	**0.0000**	**0.0000**	**0.0000**	**0.0000**	**0.0000**	**0.0000**	**0.0000**

Mitigated Construction Off-Site

	ROG	NOx	CO	SO2	Fugitive PM10	Exhaust PM10	PM10 Total	Fugitive PM2.5	Exhaust PM2.5	PM2.5 Total	Bio- CO2	NBio- CO2	Total CO2	CH4	N2O	CO2e
Category	tons/yr										MT/yr					
Hauling					0.0000	0.0000	0.0000	0.0000	0.0000	0.0000	0.0000	0.0000	0.0000	0.0000	0.0000	0.0000
Vendor					0.0000	0.0000	0.0000	0.0000	0.0000	0.0000	0.0000	0.0000	0.0000	0.0000	0.0000	0.0000
Worker					0.0000	0.0000	0.0000	0.0000	0.0000	0.0000	0.0000	0.0000	0.0000	0.0000	0.0000	0.0000
Total					**0.0000**	**0.0000**	**0.0000**	**0.0000**	**0.0000**	**0.0000**	**0.0000**	**0.0000**	**0.0000**	**0.0000**	**0.0000**	**0.0000**

3.37 Year 14 Month 12 - 2033

Unmitigated Construction Off-Site

	ROG	NOx	CO	SO2	Fugitive PM10	Exhaust PM10	PM10 Total	Fugitive PM2.5	Exhaust PM2.5	PM2.5 Total	Bio- CO2	NBio- CO2	Total CO2	CH4	N2O	CO2e
Category	tons/yr										MT/yr					
Hauling					0.0000	0.0000	0.0000	0.0000	0.0000	0.0000	0.0000	0.0000	0.0000	0.0000	0.0000	0.0000
Vendor					0.0000	0.0000	0.0000	0.0000	0.0000	0.0000	0.0000	0.0000	0.0000	0.0000	0.0000	0.0000
Worker					0.0000	0.0000	0.0000	0.0000	0.0000	0.0000	0.0000	0.0000	0.0000	0.0000	0.0000	0.0000
Total					**0.0000**	**0.0000**	**0.0000**	**0.0000**	**0.0000**	**0.0000**	**0.0000**	**0.0000**	**0.0000**	**0.0000**	**0.0000**	**0.0000**

Mitigated Construction Off-Site

	ROG	NOx	CO	SO2	Fugitive PM10	Exhaust PM10	PM10 Total	Fugitive PM2.5	Exhaust PM2.5	PM2.5 Total	Bio- CO2	NBio- CO2	Total CO2	CH4	N2O	CO2e
Category	tons/yr										MT/yr					
Hauling					0.0000	0.0000	0.0000	0.0000	0.0000	0.0000	0.0000	0.0000	0.0000	0.0000	0.0000	0.0000
Vendor					0.0000	0.0000	0.0000	0.0000	0.0000	0.0000	0.0000	0.0000	0.0000	0.0000	0.0000	0.0000
Worker					0.0000	0.0000	0.0000	0.0000	0.0000	0.0000	0.0000	0.0000	0.0000	0.0000	0.0000	0.0000
Total					**0.0000**	**0.0000**	**0.0000**	**0.0000**	**0.0000**	**0.0000**	**0.0000**	**0.0000**	**0.0000**	**0.0000**	**0.0000**	**0.0000**

3.38 Year 15 Month 1 - 2034

Unmitigated Construction On-Site

	ROG	NOx	CO	SO2	Fugitive PM10	Exhaust PM10	PM10 Total	Fugitive PM2.5	Exhaust PM2.5	PM2.5 Total	Bio- CO2	NBio- CO2	Total CO2	CH4	N2O	CO2e
Category	tons/yr										MT/yr					
Off-Road	0.0113	0.0446	0.0892	2.7000e-004		1.7400e-003	1.7400e-003		1.7400e-003	1.7400e-003	0.0000	23.2512	23.2512	9.0000e-004	0.0000	23.2700
Total	**0.0113**	**0.0446**	**0.0892**	**2.7000e-004**		**1.7400e-003**	**1.7400e-003**		**1.7400e-003**	**1.7400e-003**	**0.0000**	**23.2512**	**23.2512**	**9.0000e-004**	**0.0000**	**23.2700**

Unmitigated Construction Off-Site

	ROG	NOx	CO	SO2	Fugitive PM10	Exhaust PM10	PM10 Total	Fugitive PM2.5	Exhaust PM2.5	PM2.5 Total	Bio- CO2	NBio- CO2	Total CO2	CH4	N2O	CO2e
Category	tons/yr										MT/yr					
Hauling	0.0000	0.0000	0.0000	0.0000	0.0000	0.0000	0.0000	0.0000	0.0000	0.0000	0.0000	0.0000	0.0000	0.0000	0.0000	0.0000
Vendor	0.0000	0.0000	0.0000	0.0000	0.0000	0.0000	0.0000	0.0000	0.0000	0.0000	0.0000	0.0000	0.0000	0.0000	0.0000	0.0000
Worker	0.0000	0.0000	0.0000	0.0000	0.0000	0.0000	0.0000	0.0000	0.0000	0.0000	0.0000	0.0000	0.0000	0.0000	0.0000	0.0000
Total	**0.0000**	**0.0000**	**0.0000**	**0.0000**	**0.0000**	**0.0000**	**0.0000**	**0.0000**	**0.0000**	**0.0000**	**0.0000**	**0.0000**	**0.0000**	**0.0000**	**0.0000**	**0.0000**

3.38 Year 15 Month 1 - 2034

Mitigated Construction On-Site

	ROG	NOx	CO	SO2	Fugitive PM10	Exhaust PM10	PM10 Total	Fugitive PM2.5	Exhaust PM2.5	PM2.5 Total	Bio- CO2	NBio- CO2	Total CO2	CH4	N2O	CO2e
Category	tons/yr										MT/yr					
Off-Road	2.7100e-003	0.0117	0.1240	2.7000e-004		3.6000e-004	3.6000e-004		3.6000e-004	3.6000e-004	0.0000	23.2511	23.2511	9.0000e-004	0.0000	23.2700
Total	**2.7100e-003**	**0.0117**	**0.1240**	**2.7000e-004**		**3.6000e-004**	**3.6000e-004**		**3.6000e-004**	**3.6000e-004**	**0.0000**	**23.2511**	**23.2511**	**9.0000e-004**	**0.0000**	**23.2700**

Mitigated Construction Off-Site

	ROG	NOx	CO	SO2	Fugitive PM10	Exhaust PM10	PM10 Total	Fugitive PM2.5	Exhaust PM2.5	PM2.5 Total	Bio- CO2	NBio- CO2	Total CO2	CH4	N2O	CO2e
Category	tons/yr										MT/yr					
Hauling	0.0000	0.0000	0.0000	0.0000	0.0000	0.0000	0.0000	0.0000	0.0000	0.0000	0.0000	0.0000	0.0000	0.0000	0.0000	0.0000
Vendor	0.0000	0.0000	0.0000	0.0000	0.0000	0.0000	0.0000	0.0000	0.0000	0.0000	0.0000	0.0000	0.0000	0.0000	0.0000	0.0000
Worker	0.0000	0.0000	0.0000	0.0000	0.0000	0.0000	0.0000	0.0000	0.0000	0.0000	0.0000	0.0000	0.0000	0.0000	0.0000	0.0000
Total	**0.0000**	**0.0000**	**0.0000**	**0.0000**	**0.0000**	**0.0000**	**0.0000**	**0.0000**	**0.0000**	**0.0000**	**0.0000**	**0.0000**	**0.0000**	**0.0000**	**0.0000**	**0.0000**

3.39 Year 15 Month 2 - 2034

Unmitigated Construction On-Site

	ROG	NOx	CO	SO2	Fugitive PM10	Exhaust PM10	PM10 Total	Fugitive PM2.5	Exhaust PM2.5	PM2.5 Total	Bio- CO2	NBio- CO2	Total CO2	CH4	N2O	CO2e
Category	tons/yr										MT/yr					
Off-Road	0.0268	0.1171	0.2354	6.5000e-004		3.3600e-003	3.3600e-003		3.3600e-003	3.3600e-003	0.0000	55.3246	55.3246	2.1500e-003	0.0000	55.3696
Total	**0.0268**	**0.1171**	**0.2354**	**6.5000e-004**		**3.3600e-003**	**3.3600e-003**		**3.3600e-003**	**3.3600e-003**	**0.0000**	**55.3246**	**55.3246**	**2.1500e-003**	**0.0000**	**55.3696**

Unmitigated Construction Off-Site

	ROG	NOx	CO	SO2	Fugitive PM10	Exhaust PM10	PM10 Total	Fugitive PM2.5	Exhaust PM2.5	PM2.5 Total	Bio- CO2	NBio- CO2	Total CO2	CH4	N2O	CO2e
Category	tons/yr										MT/yr					
Hauling	0.0000	0.0000	0.0000	0.0000	0.0000	0.0000	0.0000	0.0000	0.0000	0.0000	0.0000	0.0000	0.0000	0.0000	0.0000	0.0000
Vendor	0.0000	0.0000	0.0000	0.0000	0.0000	0.0000	0.0000	0.0000	0.0000	0.0000	0.0000	0.0000	0.0000	0.0000	0.0000	0.0000
Worker	0.0000	0.0000	0.0000	0.0000	0.0000	0.0000	0.0000	0.0000	0.0000	0.0000	0.0000	0.0000	0.0000	0.0000	0.0000	0.0000
Total	**0.0000**	**0.0000**	**0.0000**	**0.0000**	**0.0000**	**0.0000**	**0.0000**	**0.0000**	**0.0000**	**0.0000**	**0.0000**	**0.0000**	**0.0000**	**0.0000**	**0.0000**	**0.0000**

3.39 Year 15 Month 2 - 2034

Mitigated Construction On-Site

	ROG	NOx	CO	SO2	Fugitive PM10	Exhaust PM10	PM10 Total	Fugitive PM2.5	Exhaust PM2.5	PM2.5 Total	Bio- CO2	NBio- CO2	Total CO2	CH4	N2O	CO2e
Category	tons/yr										MT/yr					
Off-Road	7.4300e-003	0.0691	0.3095	6.5000e-004		8.6000e-004	8.6000e-004		8.6000e-004	8.6000e-004	0.0000	55.3245	55.3245	2.1500e-003	0.0000	55.3696
Total	**7.4300e-003**	**0.0691**	**0.3095**	**6.5000e-004**		**8.6000e-004**	**8.6000e-004**		**8.6000e-004**	**8.6000e-004**	**0.0000**	**55.3245**	**55.3245**	**2.1500e-003**	**0.0000**	**55.3696**

Mitigated Construction Off-Site

	ROG	NOx	CO	SO2	Fugitive PM10	Exhaust PM10	PM10 Total	Fugitive PM2.5	Exhaust PM2.5	PM2.5 Total	Bio- CO2	NBio- CO2	Total CO2	CH4	N2O	CO2e
Category	tons/yr										MT/yr					
Hauling	0.0000	0.0000	0.0000	0.0000	0.0000	0.0000	0.0000	0.0000	0.0000	0.0000	0.0000	0.0000	0.0000	0.0000	0.0000	0.0000
Vendor	0.0000	0.0000	0.0000	0.0000	0.0000	0.0000	0.0000	0.0000	0.0000	0.0000	0.0000	0.0000	0.0000	0.0000	0.0000	0.0000
Worker	0.0000	0.0000	0.0000	0.0000	0.0000	0.0000	0.0000	0.0000	0.0000	0.0000	0.0000	0.0000	0.0000	0.0000	0.0000	0.0000
Total	**0.0000**	**0.0000**	**0.0000**	**0.0000**	**0.0000**	**0.0000**	**0.0000**	**0.0000**	**0.0000**	**0.0000**	**0.0000**	**0.0000**	**0.0000**	**0.0000**	**0.0000**	**0.0000**

3.40 Year 15 Month 3 - 2034

Unmitigated Construction On-Site

	ROG	NOx	CO	SO2	Fugitive PM10	Exhaust PM10	PM10 Total	Fugitive PM2.5	Exhaust PM2.5	PM2.5 Total	Bio- CO2	NBio- CO2	Total CO2	CH4	N2O	CO2e
Category	tons/yr										MT/yr					
Off-Road	6.9000e-003	0.0330	0.0471	1.6000e-004		7.2000e-004	7.2000e-004		7.2000e-004	7.2000e-004	0.0000	12.9565	12.9565	5.6000e-004	0.0000	12.9683
Total	**6.9000e-003**	**0.0330**	**0.0471**	**1.6000e-004**		**7.2000e-004**	**7.2000e-004**		**7.2000e-004**	**7.2000e-004**	**0.0000**	**12.9565**	**12.9565**	**5.6000e-004**	**0.0000**	**12.9683**

Unmitigated Construction Off-Site

	ROG	NOx	CO	SO2	Fugitive PM10	Exhaust PM10	PM10 Total	Fugitive PM2.5	Exhaust PM2.5	PM2.5 Total	Bio- CO2	NBio- CO2	Total CO2	CH4	N2O	CO2e
Category	tons/yr										MT/yr					
Hauling	0.0000	0.0000	0.0000	0.0000	0.0000	0.0000	0.0000	0.0000	0.0000	0.0000	0.0000	0.0000	0.0000	0.0000	0.0000	0.0000
Vendor	0.0000	0.0000	0.0000	0.0000	0.0000	0.0000	0.0000	0.0000	0.0000	0.0000	0.0000	0.0000	0.0000	0.0000	0.0000	0.0000
Worker	0.0000	0.0000	0.0000	0.0000	0.0000	0.0000	0.0000	0.0000	0.0000	0.0000	0.0000	0.0000	0.0000	0.0000	0.0000	0.0000
Total	**0.0000**	**0.0000**	**0.0000**	**0.0000**	**0.0000**	**0.0000**	**0.0000**	**0.0000**	**0.0000**	**0.0000**	**0.0000**	**0.0000**	**0.0000**	**0.0000**	**0.0000**	**0.0000**

3.40 Year 15 Month 3 - 2034

Mitigated Construction On-Site

	ROG	NOx	CO	SO2	Fugitive PM10	Exhaust PM10	PM10 Total	Fugitive PM2.5	Exhaust PM2.5	PM2.5 Total	Bio- CO2	NBio- CO2	Total CO2	CH4	N2O	CO2e
Category	tons/yr										MT/yr					
Off-Road	1.8500e-003	0.0205	0.0660	1.6000e-004		2.0000e-004	2.0000e-004		2.0000e-004	2.0000e-004	0.0000	12.9565	12.9565	5.6000e-004	0.0000	12.9682
Total	**1.8500e-003**	**0.0205**	**0.0660**	**1.6000e-004**		**2.0000e-004**	**2.0000e-004**		**2.0000e-004**	**2.0000e-004**	**0.0000**	**12.9565**	**12.9565**	**5.6000e-004**	**0.0000**	**12.9682**

Mitigated Construction Off-Site

	ROG	NOx	CO	SO2	Fugitive PM10	Exhaust PM10	PM10 Total	Fugitive PM2.5	Exhaust PM2.5	PM2.5 Total	Bio- CO2	NBio- CO2	Total CO2	CH4	N2O	CO2e
Category	tons/yr										MT/yr					
Hauling	0.0000	0.0000	0.0000	0.0000	0.0000	0.0000	0.0000	0.0000	0.0000	0.0000	0.0000	0.0000	0.0000	0.0000	0.0000	0.0000
Vendor	0.0000	0.0000	0.0000	0.0000	0.0000	0.0000	0.0000	0.0000	0.0000	0.0000	0.0000	0.0000	0.0000	0.0000	0.0000	0.0000
Worker	0.0000	0.0000	0.0000	0.0000	0.0000	0.0000	0.0000	0.0000	0.0000	0.0000	0.0000	0.0000	0.0000	0.0000	0.0000	0.0000
Total	**0.0000**	**0.0000**	**0.0000**	**0.0000**	**0.0000**	**0.0000**	**0.0000**	**0.0000**	**0.0000**	**0.0000**	**0.0000**	**0.0000**	**0.0000**	**0.0000**	**0.0000**	**0.0000**

3.41 Year 15 Month 4 - 2034

Unmitigated Construction On-Site

	ROG	NOx	CO	SO2	Fugitive PM10	Exhaust PM10	PM10 Total	Fugitive PM2.5	Exhaust PM2.5	PM2.5 Total	Bio- CO2	NBio- CO2	Total CO2	CH4	N2O	CO2e
Category	tons/yr										MT/yr					
Off-Road	0.0104	0.0441	0.0643	2.5000e-004		1.1000e-003	1.1000e-003		1.1000e-003	1.1000e-003	0.0000	21.3084	21.3084	8.4000e-004	0.0000	21.3261
Total	**0.0104**	**0.0441**	**0.0643**	**2.5000e-004**		**1.1000e-003**	**1.1000e-003**		**1.1000e-003**	**1.1000e-003**	**0.0000**	**21.3084**	**21.3084**	**8.4000e-004**	**0.0000**	**21.3261**

Unmitigated Construction Off-Site

	ROG	NOx	CO	SO2	Fugitive PM10	Exhaust PM10	PM10 Total	Fugitive PM2.5	Exhaust PM2.5	PM2.5 Total	Bio- CO2	NBio- CO2	Total CO2	CH4	N2O	CO2e
Category	tons/yr										MT/yr					
Hauling	0.0000	0.0000	0.0000	0.0000	0.0000	0.0000	0.0000	0.0000	0.0000	0.0000	0.0000	0.0000	0.0000	0.0000	0.0000	0.0000
Vendor	0.0000	0.0000	0.0000	0.0000	0.0000	0.0000	0.0000	0.0000	0.0000	0.0000	0.0000	0.0000	0.0000	0.0000	0.0000	0.0000
Worker	0.0000	0.0000	0.0000	0.0000	0.0000	0.0000	0.0000	0.0000	0.0000	0.0000	0.0000	0.0000	0.0000	0.0000	0.0000	0.0000
Total	**0.0000**	**0.0000**	**0.0000**	**0.0000**	**0.0000**	**0.0000**	**0.0000**	**0.0000**	**0.0000**	**0.0000**	**0.0000**	**0.0000**	**0.0000**	**0.0000**	**0.0000**	**0.0000**

3.41 Year 15 Month 4 - 2034

Mitigated Construction On-Site

	ROG	NOx	CO	SO2	Fugitive PM10	Exhaust PM10	PM10 Total	Fugitive PM2.5	Exhaust PM2.5	PM2.5 Total	Bio- CO2	NBio- CO2	Total CO2	CH4	N2O	CO2e
Category	tons/yr										MT/yr					
Off-Road	2.7900e-003	0.0237	0.1008	2.5000e-004		3.3000e-004	3.3000e-004		3.3000e-004	3.3000e-004	0.0000	21.3084	21.3084	8.4000e-004	0.0000	21.3261
Total	**2.7900e-003**	**0.0237**	**0.1008**	**2.5000e-004**		**3.3000e-004**	**3.3000e-004**		**3.3000e-004**	**3.3000e-004**	**0.0000**	**21.3084**	**21.3084**	**8.4000e-004**	**0.0000**	**21.3261**

Mitigated Construction Off-Site

	ROG	NOx	CO	SO2	Fugitive PM10	Exhaust PM10	PM10 Total	Fugitive PM2.5	Exhaust PM2.5	PM2.5 Total	Bio- CO2	NBio- CO2	Total CO2	CH4	N2O	CO2e
Category	tons/yr										MT/yr					
Hauling	0.0000	0.0000	0.0000	0.0000	0.0000	0.0000	0.0000	0.0000	0.0000	0.0000	0.0000	0.0000	0.0000	0.0000	0.0000	0.0000
Vendor	0.0000	0.0000	0.0000	0.0000	0.0000	0.0000	0.0000	0.0000	0.0000	0.0000	0.0000	0.0000	0.0000	0.0000	0.0000	0.0000
Worker	0.0000	0.0000	0.0000	0.0000	0.0000	0.0000	0.0000	0.0000	0.0000	0.0000	0.0000	0.0000	0.0000	0.0000	0.0000	0.0000
Total	**0.0000**	**0.0000**	**0.0000**	**0.0000**	**0.0000**	**0.0000**	**0.0000**	**0.0000**	**0.0000**	**0.0000**	**0.0000**	**0.0000**	**0.0000**	**0.0000**	**0.0000**	**0.0000**

3.42 Year 15 Month 5 - 2034

Unmitigated Construction On-Site

	ROG	NOx	CO	SO2	Fugitive PM10	Exhaust PM10	PM10 Total	Fugitive PM2.5	Exhaust PM2.5	PM2.5 Total	Bio- CO2	NBio- CO2	Total CO2	CH4	N2O	CO2e
Category	tons/yr										MT/yr					
Off-Road	6.9000e-003	0.0330	0.0471	1.6000e-004		7.2000e-004	7.2000e-004		7.2000e-004	7.2000e-004	0.0000	12.9565	12.9565	5.6000e-004	0.0000	12.9683
Total	**6.9000e-003**	**0.0330**	**0.0471**	**1.6000e-004**		**7.2000e-004**	**7.2000e-004**		**7.2000e-004**	**7.2000e-004**	**0.0000**	**12.9565**	**12.9565**	**5.6000e-004**	**0.0000**	**12.9683**

Unmitigated Construction Off-Site

	ROG	NOx	CO	SO2	Fugitive PM10	Exhaust PM10	PM10 Total	Fugitive PM2.5	Exhaust PM2.5	PM2.5 Total	Bio- CO2	NBio- CO2	Total CO2	CH4	N2O	CO2e
Category	tons/yr										MT/yr					
Hauling	0.0000	0.0000	0.0000	0.0000	0.0000	0.0000	0.0000	0.0000	0.0000	0.0000	0.0000	0.0000	0.0000	0.0000	0.0000	0.0000
Vendor	0.0000	0.0000	0.0000	0.0000	0.0000	0.0000	0.0000	0.0000	0.0000	0.0000	0.0000	0.0000	0.0000	0.0000	0.0000	0.0000
Worker	0.0000	0.0000	0.0000	0.0000	0.0000	0.0000	0.0000	0.0000	0.0000	0.0000	0.0000	0.0000	0.0000	0.0000	0.0000	0.0000
Total	**0.0000**	**0.0000**	**0.0000**	**0.0000**	**0.0000**	**0.0000**	**0.0000**	**0.0000**	**0.0000**	**0.0000**	**0.0000**	**0.0000**	**0.0000**	**0.0000**	**0.0000**	**0.0000**

3.42 Year 15 Month 5 - 2034

Mitigated Construction On-Site

	ROG	NOx	CO	SO2	Fugitive PM10	Exhaust PM10	PM10 Total	Fugitive PM2.5	Exhaust PM2.5	PM2.5 Total	Bio- CO2	NBio- CO2	Total CO2	CH4	N2O	CO2e
Category	tons/yr										MT/yr					
Off-Road	1.8500e-003	0.0205	0.0660	1.6000e-004		2.0000e-004	2.0000e-004		2.0000e-004	2.0000e-004	0.0000	12.9565	12.9565	5.6000e-004	0.0000	12.9682
Total	**1.8500e-003**	**0.0205**	**0.0660**	**1.6000e-004**		**2.0000e-004**	**2.0000e-004**		**2.0000e-004**	**2.0000e-004**	**0.0000**	**12.9565**	**12.9565**	**5.6000e-004**	**0.0000**	**12.9682**

Mitigated Construction Off-Site

	ROG	NOx	CO	SO2	Fugitive PM10	Exhaust PM10	PM10 Total	Fugitive PM2.5	Exhaust PM2.5	PM2.5 Total	Bio- CO2	NBio- CO2	Total CO2	CH4	N2O	CO2e
Category	tons/yr										MT/yr					
Hauling	0.0000	0.0000	0.0000	0.0000	0.0000	0.0000	0.0000	0.0000	0.0000	0.0000	0.0000	0.0000	0.0000	0.0000	0.0000	0.0000
Vendor	0.0000	0.0000	0.0000	0.0000	0.0000	0.0000	0.0000	0.0000	0.0000	0.0000	0.0000	0.0000	0.0000	0.0000	0.0000	0.0000
Worker	0.0000	0.0000	0.0000	0.0000	0.0000	0.0000	0.0000	0.0000	0.0000	0.0000	0.0000	0.0000	0.0000	0.0000	0.0000	0.0000
Total	**0.0000**	**0.0000**	**0.0000**	**0.0000**	**0.0000**	**0.0000**	**0.0000**	**0.0000**	**0.0000**	**0.0000**	**0.0000**	**0.0000**	**0.0000**	**0.0000**	**0.0000**	**0.0000**

3.43 Year 15 Month 6 - 2034

Unmitigated Construction On-Site

	ROG	NOx	CO	SO2	Fugitive PM10	Exhaust PM10	PM10 Total	Fugitive PM2.5	Exhaust PM2.5	PM2.5 Total	Bio- CO2	NBio- CO2	Total CO2	CH4	N2O	CO2e
Category	tons/yr										MT/yr					
Off-Road	6.6400e-003	0.0318	0.0453	1.5000e-004		6.9000e-004	6.9000e-004		6.9000e-004	6.9000e-004	0.0000	12.4767	12.4767	5.4000e-004	0.0000	12.4880
Total	**6.6400e-003**	**0.0318**	**0.0453**	**1.5000e-004**		**6.9000e-004**	**6.9000e-004**		**6.9000e-004**	**6.9000e-004**	**0.0000**	**12.4767**	**12.4767**	**5.4000e-004**	**0.0000**	**12.4880**

Unmitigated Construction Off-Site

	ROG	NOx	CO	SO2	Fugitive PM10	Exhaust PM10	PM10 Total	Fugitive PM2.5	Exhaust PM2.5	PM2.5 Total	Bio- CO2	NBio- CO2	Total CO2	CH4	N2O	CO2e
Category	tons/yr										MT/yr					
Hauling	0.0000	0.0000	0.0000	0.0000	0.0000	0.0000	0.0000	0.0000	0.0000	0.0000	0.0000	0.0000	0.0000	0.0000	0.0000	0.0000
Vendor	0.0000	0.0000	0.0000	0.0000	0.0000	0.0000	0.0000	0.0000	0.0000	0.0000	0.0000	0.0000	0.0000	0.0000	0.0000	0.0000
Worker	0.0000	0.0000	0.0000	0.0000	0.0000	0.0000	0.0000	0.0000	0.0000	0.0000	0.0000	0.0000	0.0000	0.0000	0.0000	0.0000
Total	**0.0000**	**0.0000**	**0.0000**	**0.0000**	**0.0000**	**0.0000**	**0.0000**	**0.0000**	**0.0000**	**0.0000**	**0.0000**	**0.0000**	**0.0000**	**0.0000**	**0.0000**	**0.0000**

3.43 Year 15 Month 6 - 2034

Mitigated Construction On-Site

	ROG	NOx	CO	SO2	Fugitive PM10	Exhaust PM10	PM10 Total	Fugitive PM2.5	Exhaust PM2.5	PM2.5 Total	Bio- CO2	NBio- CO2	Total CO2	CH4	N2O	CO2e
Category	tons/yr										MT/yr					
Off-Road	1.7800e-003	0.0198	0.0635	1.5000e-004		1.9000e-004	1.9000e-004		1.9000e-004	1.9000e-004	0.0000	12.4767	12.4767	5.4000e-004	0.0000	12.4879
Total	**1.7800e-003**	**0.0198**	**0.0635**	**1.5000e-004**		**1.9000e-004**	**1.9000e-004**		**1.9000e-004**	**1.9000e-004**	**0.0000**	**12.4767**	**12.4767**	**5.4000e-004**	**0.0000**	**12.4879**

Mitigated Construction Off-Site

	ROG	NOx	CO	SO2	Fugitive PM10	Exhaust PM10	PM10 Total	Fugitive PM2.5	Exhaust PM2.5	PM2.5 Total	Bio- CO2	NBio- CO2	Total CO2	CH4	N2O	CO2e
Category	tons/yr										MT/yr					
Hauling	0.0000	0.0000	0.0000	0.0000	0.0000	0.0000	0.0000	0.0000	0.0000	0.0000	0.0000	0.0000	0.0000	0.0000	0.0000	0.0000
Vendor	0.0000	0.0000	0.0000	0.0000	0.0000	0.0000	0.0000	0.0000	0.0000	0.0000	0.0000	0.0000	0.0000	0.0000	0.0000	0.0000
Worker	0.0000	0.0000	0.0000	0.0000	0.0000	0.0000	0.0000	0.0000	0.0000	0.0000	0.0000	0.0000	0.0000	0.0000	0.0000	0.0000
Total	**0.0000**	**0.0000**	**0.0000**	**0.0000**	**0.0000**	**0.0000**	**0.0000**	**0.0000**	**0.0000**	**0.0000**	**0.0000**	**0.0000**	**0.0000**	**0.0000**	**0.0000**	**0.0000**

3.44 Year 15 Month 7 - 2034

Unmitigated Construction On-Site

	ROG	NOx	CO	SO2	Fugitive PM10	Exhaust PM10	PM10 Total	Fugitive PM2.5	Exhaust PM2.5	PM2.5 Total	Bio- CO2	NBio- CO2	Total CO2	CH4	N2O	CO2e
Category	tons/yr										MT/yr					
Off-Road	6.6400e-003	0.0318	0.0453	1.5000e-004		6.9000e-004	6.9000e-004		6.9000e-004	6.9000e-004	0.0000	12.4767	12.4767	5.4000e-004	0.0000	12.4880
Total	**6.6400e-003**	**0.0318**	**0.0453**	**1.5000e-004**		**6.9000e-004**	**6.9000e-004**		**6.9000e-004**	**6.9000e-004**	**0.0000**	**12.4767**	**12.4767**	**5.4000e-004**	**0.0000**	**12.4880**

Unmitigated Construction Off-Site

	ROG	NOx	CO	SO2	Fugitive PM10	Exhaust PM10	PM10 Total	Fugitive PM2.5	Exhaust PM2.5	PM2.5 Total	Bio- CO2	NBio- CO2	Total CO2	CH4	N2O	CO2e
Category	tons/yr										MT/yr					
Hauling	0.0000	0.0000	0.0000	0.0000	0.0000	0.0000	0.0000	0.0000	0.0000	0.0000	0.0000	0.0000	0.0000	0.0000	0.0000	0.0000
Vendor	0.0000	0.0000	0.0000	0.0000	0.0000	0.0000	0.0000	0.0000	0.0000	0.0000	0.0000	0.0000	0.0000	0.0000	0.0000	0.0000
Worker	0.0000	0.0000	0.0000	0.0000	0.0000	0.0000	0.0000	0.0000	0.0000	0.0000	0.0000	0.0000	0.0000	0.0000	0.0000	0.0000
Total	**0.0000**	**0.0000**	**0.0000**	**0.0000**	**0.0000**	**0.0000**	**0.0000**	**0.0000**	**0.0000**	**0.0000**	**0.0000**	**0.0000**	**0.0000**	**0.0000**	**0.0000**	**0.0000**

3.44 Year 15 Month 7 - 2034

Mitigated Construction On-Site

	ROG	NOx	CO	SO2	Fugitive PM10	Exhaust PM10	PM10 Total	Fugitive PM2.5	Exhaust PM2.5	PM2.5 Total	Bio- CO2	NBio- CO2	Total CO2	CH4	N2O	CO2e
Category	tons/yr										MT/yr					
Off-Road	1.7800e-003	0.0198	0.0635	1.5000e-004		1.9000e-004	1.9000e-004		1.9000e-004	1.9000e-004	0.0000	12.4767	12.4767	5.4000e-004	0.0000	12.4879
Total	**1.7800e-003**	**0.0198**	**0.0635**	**1.5000e-004**		**1.9000e-004**	**1.9000e-004**		**1.9000e-004**	**1.9000e-004**	**0.0000**	**12.4767**	**12.4767**	**5.4000e-004**	**0.0000**	**12.4879**

Mitigated Construction Off-Site

	ROG	NOx	CO	SO2	Fugitive PM10	Exhaust PM10	PM10 Total	Fugitive PM2.5	Exhaust PM2.5	PM2.5 Total	Bio- CO2	NBio- CO2	Total CO2	CH4	N2O	CO2e
Category	tons/yr										MT/yr					
Hauling	0.0000	0.0000	0.0000	0.0000	0.0000	0.0000	0.0000	0.0000	0.0000	0.0000	0.0000	0.0000	0.0000	0.0000	0.0000	0.0000
Vendor	0.0000	0.0000	0.0000	0.0000	0.0000	0.0000	0.0000	0.0000	0.0000	0.0000	0.0000	0.0000	0.0000	0.0000	0.0000	0.0000
Worker	0.0000	0.0000	0.0000	0.0000	0.0000	0.0000	0.0000	0.0000	0.0000	0.0000	0.0000	0.0000	0.0000	0.0000	0.0000	0.0000
Total	**0.0000**	**0.0000**	**0.0000**	**0.0000**	**0.0000**	**0.0000**	**0.0000**	**0.0000**	**0.0000**	**0.0000**	**0.0000**	**0.0000**	**0.0000**	**0.0000**	**0.0000**	**0.0000**

3.45 Year 15 Month 8 - 2034

Unmitigated Construction On-Site

	ROG	NOx	CO	SO2	Fugitive PM10	Exhaust PM10	PM10 Total	Fugitive PM2.5	Exhaust PM2.5	PM2.5 Total	Bio- CO2	NBio- CO2	Total CO2	CH4	N2O	CO2e
Category	tons/yr										MT/yr					
Off-Road	6.9000e-003	0.0330	0.0471	1.6000e-004		7.2000e-004	7.2000e-004		7.2000e-004	7.2000e-004	0.0000	12.9565	12.9565	5.6000e-004	0.0000	12.9683
Total	**6.9000e-003**	**0.0330**	**0.0471**	**1.6000e-004**		**7.2000e-004**	**7.2000e-004**		**7.2000e-004**	**7.2000e-004**	**0.0000**	**12.9565**	**12.9565**	**5.6000e-004**	**0.0000**	**12.9683**

Unmitigated Construction Off-Site

	ROG	NOx	CO	SO2	Fugitive PM10	Exhaust PM10	PM10 Total	Fugitive PM2.5	Exhaust PM2.5	PM2.5 Total	Bio- CO2	NBio- CO2	Total CO2	CH4	N2O	CO2e
Category	tons/yr										MT/yr					
Hauling	0.0000	0.0000	0.0000	0.0000	0.0000	0.0000	0.0000	0.0000	0.0000	0.0000	0.0000	0.0000	0.0000	0.0000	0.0000	0.0000
Vendor	0.0000	0.0000	0.0000	0.0000	0.0000	0.0000	0.0000	0.0000	0.0000	0.0000	0.0000	0.0000	0.0000	0.0000	0.0000	0.0000
Worker	0.0000	0.0000	0.0000	0.0000	0.0000	0.0000	0.0000	0.0000	0.0000	0.0000	0.0000	0.0000	0.0000	0.0000	0.0000	0.0000
Total	**0.0000**	**0.0000**	**0.0000**	**0.0000**	**0.0000**	**0.0000**	**0.0000**	**0.0000**	**0.0000**	**0.0000**	**0.0000**	**0.0000**	**0.0000**	**0.0000**	**0.0000**	**0.0000**

3.45 Year 15 Month 8 - 2034

Mitigated Construction On-Site

	ROG	NOx	CO	SO2	Fugitive PM10	Exhaust PM10	PM10 Total	Fugitive PM2.5	Exhaust PM2.5	PM2.5 Total	Bio- CO2	NBio- CO2	Total CO2	CH4	N2O	CO2e
Category	tons/yr										MT/yr					
Off-Road	1.8500e-003	0.0205	0.0660	1.6000e-004		2.0000e-004	2.0000e-004		2.0000e-004	2.0000e-004	0.0000	12.9565	12.9565	5.6000e-004	0.0000	12.9682
Total	**1.8500e-003**	**0.0205**	**0.0660**	**1.6000e-004**		**2.0000e-004**	**2.0000e-004**		**2.0000e-004**	**2.0000e-004**	**0.0000**	**12.9565**	**12.9565**	**5.6000e-004**	**0.0000**	**12.9682**

Mitigated Construction Off-Site

	ROG	NOx	CO	SO2	Fugitive PM10	Exhaust PM10	PM10 Total	Fugitive PM2.5	Exhaust PM2.5	PM2.5 Total	Bio- CO2	NBio- CO2	Total CO2	CH4	N2O	CO2e
Category	tons/yr										MT/yr					
Hauling	0.0000	0.0000	0.0000	0.0000	0.0000	0.0000	0.0000	0.0000	0.0000	0.0000	0.0000	0.0000	0.0000	0.0000	0.0000	0.0000
Vendor	0.0000	0.0000	0.0000	0.0000	0.0000	0.0000	0.0000	0.0000	0.0000	0.0000	0.0000	0.0000	0.0000	0.0000	0.0000	0.0000
Worker	0.0000	0.0000	0.0000	0.0000	0.0000	0.0000	0.0000	0.0000	0.0000	0.0000	0.0000	0.0000	0.0000	0.0000	0.0000	0.0000
Total	**0.0000**	**0.0000**	**0.0000**	**0.0000**	**0.0000**	**0.0000**	**0.0000**	**0.0000**	**0.0000**	**0.0000**	**0.0000**	**0.0000**	**0.0000**	**0.0000**	**0.0000**	**0.0000**

3.46 Year 15 Month 9 - 2034

Unmitigated Construction On-Site

	ROG	NOx	CO	SO2	Fugitive PM10	Exhaust PM10	PM10 Total	Fugitive PM2.5	Exhaust PM2.5	PM2.5 Total	Bio- CO2	NBio- CO2	Total CO2	CH4	N2O	CO2e
Category	tons/yr										MT/yr					
Off-Road	0.0743	0.2821	0.4370	1.7800e-003		0.0103	0.0103		0.0103	0.0103	0.0000	166.3649	166.3649	5.9200e-003	0.0000	166.4893
Total	**0.0743**	**0.2821**	**0.4370**	**1.7800e-003**		**0.0103**	**0.0103**		**0.0103**	**0.0103**	**0.0000**	**166.3649**	**166.3649**	**5.9200e-003**	**0.0000**	**166.4893**

Unmitigated Construction Off-Site

	ROG	NOx	CO	SO2	Fugitive PM10	Exhaust PM10	PM10 Total	Fugitive PM2.5	Exhaust PM2.5	PM2.5 Total	Bio- CO2	NBio- CO2	Total CO2	CH4	N2O	CO2e
Category	tons/yr										MT/yr					
Hauling	0.0000	0.0000	0.0000	0.0000	0.0000	0.0000	0.0000	0.0000	0.0000	0.0000	0.0000	0.0000	0.0000	0.0000	0.0000	0.0000
Vendor	0.0000	0.0000	0.0000	0.0000	0.0000	0.0000	0.0000	0.0000	0.0000	0.0000	0.0000	0.0000	0.0000	0.0000	0.0000	0.0000
Worker	0.0000	0.0000	0.0000	0.0000	0.0000	0.0000	0.0000	0.0000	0.0000	0.0000	0.0000	0.0000	0.0000	0.0000	0.0000	0.0000
Total	**0.0000**	**0.0000**	**0.0000**	**0.0000**	**0.0000**	**0.0000**	**0.0000**	**0.0000**	**0.0000**	**0.0000**	**0.0000**	**0.0000**	**0.0000**	**0.0000**	**0.0000**	**0.0000**

3.46 Year 15 Month 9 - 2034

Mitigated Construction On-Site

	ROG	NOx	CO	SO2	Fugitive PM10	Exhaust PM10	PM10 Total	Fugitive PM2.5	Exhaust PM2.5	PM2.5 Total	Bio- CO2	NBio- CO2	Total CO2	CH4	N2O	CO2e
Category	tons/yr										MT/yr					
Off-Road	0.0194	0.0839	0.7569	1.7800e-003		2.5800e-003	2.5800e-003		2.5800e-003	2.5800e-003	0.0000	166.3647	166.3647	5.9200e-003	0.0000	166.4891
Total	**0.0194**	**0.0839**	**0.7569**	**1.7800e-003**		**2.5800e-003**	**2.5800e-003**		**2.5800e-003**	**2.5800e-003**	**0.0000**	**166.3647**	**166.3647**	**5.9200e-003**	**0.0000**	**166.4891**

Mitigated Construction Off-Site

	ROG	NOx	CO	SO2	Fugitive PM10	Exhaust PM10	PM10 Total	Fugitive PM2.5	Exhaust PM2.5	PM2.5 Total	Bio- CO2	NBio- CO2	Total CO2	CH4	N2O	CO2e
Category	tons/yr										MT/yr					
Hauling	0.0000	0.0000	0.0000	0.0000	0.0000	0.0000	0.0000	0.0000	0.0000	0.0000	0.0000	0.0000	0.0000	0.0000	0.0000	0.0000
Vendor	0.0000	0.0000	0.0000	0.0000	0.0000	0.0000	0.0000	0.0000	0.0000	0.0000	0.0000	0.0000	0.0000	0.0000	0.0000	0.0000
Worker	0.0000	0.0000	0.0000	0.0000	0.0000	0.0000	0.0000	0.0000	0.0000	0.0000	0.0000	0.0000	0.0000	0.0000	0.0000	0.0000
Total	**0.0000**	**0.0000**	**0.0000**	**0.0000**	**0.0000**	**0.0000**	**0.0000**	**0.0000**	**0.0000**	**0.0000**	**0.0000**	**0.0000**	**0.0000**	**0.0000**	**0.0000**	**0.0000**

3.47 Year 15 Month 10 - 2034

Unmitigated Construction On-Site

	ROG	NOx	CO	SO2	Fugitive PM10	Exhaust PM10	PM10 Total	Fugitive PM2.5	Exhaust PM2.5	PM2.5 Total	Bio- CO2	NBio- CO2	Total CO2	CH4	N2O	CO2e
Category	tons/yr										MT/yr					
Off-Road	0.0743	0.2821	0.4370	1.7800e-003		0.0103	0.0103		0.0103	0.0103	0.0000	166.3649	166.3649	5.9200e-003	0.0000	166.4893
Total	**0.0743**	**0.2821**	**0.4370**	**1.7800e-003**		**0.0103**	**0.0103**		**0.0103**	**0.0103**	**0.0000**	**166.3649**	**166.3649**	**5.9200e-003**	**0.0000**	**166.4893**

Unmitigated Construction Off-Site

	ROG	NOx	CO	SO2	Fugitive PM10	Exhaust PM10	PM10 Total	Fugitive PM2.5	Exhaust PM2.5	PM2.5 Total	Bio- CO2	NBio- CO2	Total CO2	CH4	N2O	CO2e
Category	tons/yr										MT/yr					
Hauling	0.0000	0.0000	0.0000	0.0000	0.0000	0.0000	0.0000	0.0000	0.0000	0.0000	0.0000	0.0000	0.0000	0.0000	0.0000	0.0000
Vendor	0.0000	0.0000	0.0000	0.0000	0.0000	0.0000	0.0000	0.0000	0.0000	0.0000	0.0000	0.0000	0.0000	0.0000	0.0000	0.0000
Worker	0.0000	0.0000	0.0000	0.0000	0.0000	0.0000	0.0000	0.0000	0.0000	0.0000	0.0000	0.0000	0.0000	0.0000	0.0000	0.0000
Total	**0.0000**	**0.0000**	**0.0000**	**0.0000**	**0.0000**	**0.0000**	**0.0000**	**0.0000**	**0.0000**	**0.0000**	**0.0000**	**0.0000**	**0.0000**	**0.0000**	**0.0000**	**0.0000**

3.47 Year 15 Month 10 - 2034

Mitigated Construction On-Site

	ROG	NOx	CO	SO2	Fugitive PM10	Exhaust PM10	PM10 Total	Fugitive PM2.5	Exhaust PM2.5	PM2.5 Total	Bio- CO2	NBio- CO2	Total CO2	CH4	N2O	CO2e
Category	tons/yr										MT/yr					
Off-Road	0.0194	0.0839	0.7569	1.7800e-003		2.5800e-003	2.5800e-003		2.5800e-003	2.5800e-003	0.0000	166.3647	166.3647	5.9200e-003	0.0000	166.4891
Total	**0.0194**	**0.0839**	**0.7569**	**1.7800e-003**		**2.5800e-003**	**2.5800e-003**		**2.5800e-003**	**2.5800e-003**	**0.0000**	**166.3647**	**166.3647**	**5.9200e-003**	**0.0000**	**166.4891**

Mitigated Construction Off-Site

	ROG	NOx	CO	SO2	Fugitive PM10	Exhaust PM10	PM10 Total	Fugitive PM2.5	Exhaust PM2.5	PM2.5 Total	Bio- CO2	NBio- CO2	Total CO2	CH4	N2O	CO2e
Category	tons/yr										MT/yr					
Hauling	0.0000	0.0000	0.0000	0.0000	0.0000	0.0000	0.0000	0.0000	0.0000	0.0000	0.0000	0.0000	0.0000	0.0000	0.0000	0.0000
Vendor	0.0000	0.0000	0.0000	0.0000	0.0000	0.0000	0.0000	0.0000	0.0000	0.0000	0.0000	0.0000	0.0000	0.0000	0.0000	0.0000
Worker	0.0000	0.0000	0.0000	0.0000	0.0000	0.0000	0.0000	0.0000	0.0000	0.0000	0.0000	0.0000	0.0000	0.0000	0.0000	0.0000
Total	**0.0000**	**0.0000**	**0.0000**	**0.0000**	**0.0000**	**0.0000**	**0.0000**	**0.0000**	**0.0000**	**0.0000**	**0.0000**	**0.0000**	**0.0000**	**0.0000**	**0.0000**	**0.0000**

3.48 Year 15 Month 11 - 2034

Unmitigated Construction Off-Site

	ROG	NOx	CO	SO2	Fugitive PM10	Exhaust PM10	PM10 Total	Fugitive PM2.5	Exhaust PM2.5	PM2.5 Total	Bio- CO2	NBio- CO2	Total CO2	CH4	N2O	CO2e
Category	tons/yr										MT/yr					
Hauling					0.0000	0.0000	0.0000	0.0000	0.0000	0.0000	0.0000	0.0000	0.0000	0.0000	0.0000	0.0000
Vendor					0.0000	0.0000	0.0000	0.0000	0.0000	0.0000	0.0000	0.0000	0.0000	0.0000	0.0000	0.0000
Worker					0.0000	0.0000	0.0000	0.0000	0.0000	0.0000	0.0000	0.0000	0.0000	0.0000	0.0000	0.0000
Total					**0.0000**	**0.0000**	**0.0000**	**0.0000**	**0.0000**	**0.0000**	**0.0000**	**0.0000**	**0.0000**	**0.0000**	**0.0000**	**0.0000**

Mitigated Construction Off-Site

	ROG	NOx	CO	SO2	Fugitive PM10	Exhaust PM10	PM10 Total	Fugitive PM2.5	Exhaust PM2.5	PM2.5 Total	Bio- CO2	NBio- CO2	Total CO2	CH4	N2O	CO2e
Category	tons/yr										MT/yr					
Hauling					0.0000	0.0000	0.0000	0.0000	0.0000	0.0000	0.0000	0.0000	0.0000	0.0000	0.0000	0.0000
Vendor					0.0000	0.0000	0.0000	0.0000	0.0000	0.0000	0.0000	0.0000	0.0000	0.0000	0.0000	0.0000
Worker					0.0000	0.0000	0.0000	0.0000	0.0000	0.0000	0.0000	0.0000	0.0000	0.0000	0.0000	0.0000
Total					**0.0000**	**0.0000**	**0.0000**	**0.0000**	**0.0000**	**0.0000**	**0.0000**	**0.0000**	**0.0000**	**0.0000**	**0.0000**	**0.0000**

3.49 Year 15 Month 12 - 2034

Unmitigated Construction Off-Site

	ROG	NOx	CO	SO2	Fugitive PM10	Exhaust PM10	PM10 Total	Fugitive PM2.5	Exhaust PM2.5	PM2.5 Total	Bio- CO2	NBio- CO2	Total CO2	CH4	N2O	CO2e
Category	tons/yr										MT/yr					
Hauling					0.0000	0.0000	0.0000	0.0000	0.0000	0.0000	0.0000	0.0000	0.0000	0.0000	0.0000	0.0000
Vendor					0.0000	0.0000	0.0000	0.0000	0.0000	0.0000	0.0000	0.0000	0.0000	0.0000	0.0000	0.0000
Worker					0.0000	0.0000	0.0000	0.0000	0.0000	0.0000	0.0000	0.0000	0.0000	0.0000	0.0000	0.0000
Total					**0.0000**	**0.0000**	**0.0000**	**0.0000**	**0.0000**	**0.0000**	**0.0000**	**0.0000**	**0.0000**	**0.0000**	**0.0000**	**0.0000**

Mitigated Construction Off-Site

	ROG	NOx	CO	SO2	Fugitive PM10	Exhaust PM10	PM10 Total	Fugitive PM2.5	Exhaust PM2.5	PM2.5 Total	Bio- CO2	NBio- CO2	Total CO2	CH4	N2O	CO2e
Category	tons/yr										MT/yr					
Hauling					0.0000	0.0000	0.0000	0.0000	0.0000	0.0000	0.0000	0.0000	0.0000	0.0000	0.0000	0.0000
Vendor					0.0000	0.0000	0.0000	0.0000	0.0000	0.0000	0.0000	0.0000	0.0000	0.0000	0.0000	0.0000
Worker					0.0000	0.0000	0.0000	0.0000	0.0000	0.0000	0.0000	0.0000	0.0000	0.0000	0.0000	0.0000
Total					**0.0000**	**0.0000**	**0.0000**	**0.0000**	**0.0000**	**0.0000**	**0.0000**	**0.0000**	**0.0000**	**0.0000**	**0.0000**	**0.0000**

3.50 Year 16 Month 1 - 2035

Unmitigated Construction On-Site

	ROG	NOx	CO	SO2	Fugitive PM10	Exhaust PM10	PM10 Total	Fugitive PM2.5	Exhaust PM2.5	PM2.5 Total	Bio- CO2	NBio- CO2	Total CO2	CH4	N2O	CO2e
Category	tons/yr										MT/yr					
Off-Road	0.0146	0.0455	0.1700	4.2000e-004		1.5100e-003	1.5100e-003		1.5100e-003	1.5100e-003	0.0000	36.3271	36.3271	1.1600e-003	0.0000	36.3515
Total	**0.0146**	**0.0455**	**0.1700**	**4.2000e-004**		**1.5100e-003**	**1.5100e-003**		**1.5100e-003**	**1.5100e-003**	**0.0000**	**36.3271**	**36.3271**	**1.1600e-003**	**0.0000**	**36.3515**

Unmitigated Construction Off-Site

	ROG	NOx	CO	SO2	Fugitive PM10	Exhaust PM10	PM10 Total	Fugitive PM2.5	Exhaust PM2.5	PM2.5 Total	Bio- CO2	NBio- CO2	Total CO2	CH4	N2O	CO2e
Category	tons/yr										MT/yr					
Hauling	0.0000	0.0000	0.0000	0.0000	0.0000	0.0000	0.0000	0.0000	0.0000	0.0000	0.0000	0.0000	0.0000	0.0000	0.0000	0.0000
Vendor	0.0000	0.0000	0.0000	0.0000	0.0000	0.0000	0.0000	0.0000	0.0000	0.0000	0.0000	0.0000	0.0000	0.0000	0.0000	0.0000
Worker	0.0000	0.0000	0.0000	0.0000	0.0000	0.0000	0.0000	0.0000	0.0000	0.0000	0.0000	0.0000	0.0000	0.0000	0.0000	0.0000
Total	**0.0000**	**0.0000**	**0.0000**	**0.0000**	**0.0000**	**0.0000**	**0.0000**	**0.0000**	**0.0000**	**0.0000**	**0.0000**	**0.0000**	**0.0000**	**0.0000**	**0.0000**	**0.0000**

3.50 Year 16 Month 1 - 2035

Mitigated Construction On-Site

	ROG	NOx	CO	SO2	Fugitive PM10	Exhaust PM10	PM10 Total	Fugitive PM2.5	Exhaust PM2.5	PM2.5 Total	Bio- CO2	NBio- CO2	Total CO2	CH4	N2O	CO2e
Category	tons/yr										MT/yr					
Off-Road	4.6700e-003	0.0366	0.2162	4.2000e-004		5.6000e-004	5.6000e-004		5.6000e-004	5.6000e-004	0.0000	36.3271	36.3271	1.1600e-003	0.0000	36.3515
Total	**4.6700e-003**	**0.0366**	**0.2162**	**4.2000e-004**		**5.6000e-004**	**5.6000e-004**		**5.6000e-004**	**5.6000e-004**	**0.0000**	**36.3271**	**36.3271**	**1.1600e-003**	**0.0000**	**36.3515**

Mitigated Construction Off-Site

	ROG	NOx	CO	SO2	Fugitive PM10	Exhaust PM10	PM10 Total	Fugitive PM2.5	Exhaust PM2.5	PM2.5 Total	Bio- CO2	NBio- CO2	Total CO2	CH4	N2O	CO2e
Category	tons/yr										MT/yr					
Hauling	0.0000	0.0000	0.0000	0.0000	0.0000	0.0000	0.0000	0.0000	0.0000	0.0000	0.0000	0.0000	0.0000	0.0000	0.0000	0.0000
Vendor	0.0000	0.0000	0.0000	0.0000	0.0000	0.0000	0.0000	0.0000	0.0000	0.0000	0.0000	0.0000	0.0000	0.0000	0.0000	0.0000
Worker	0.0000	0.0000	0.0000	0.0000	0.0000	0.0000	0.0000	0.0000	0.0000	0.0000	0.0000	0.0000	0.0000	0.0000	0.0000	0.0000
Total	**0.0000**	**0.0000**	**0.0000**	**0.0000**	**0.0000**	**0.0000**	**0.0000**	**0.0000**	**0.0000**	**0.0000**	**0.0000**	**0.0000**	**0.0000**	**0.0000**	**0.0000**	**0.0000**

3.51 Year 16 Month 2 - 2035

Unmitigated Construction On-Site

	ROG	NOx	CO	SO2	Fugitive PM10	Exhaust PM10	PM10 Total	Fugitive PM2.5	Exhaust PM2.5	PM2.5 Total	Bio- CO2	NBio- CO2	Total CO2	CH4	N2O	CO2e
Category	tons/yr										MT/yr					
Off-Road	0.0381	0.1420	0.4331	1.0900e-003		3.1800e-003	3.1800e-003		3.1800e-003	3.1800e-003	0.0000	91.7603	91.7603	3.0500e-003	0.0000	91.8243
Total	**0.0381**	**0.1420**	**0.4331**	**1.0900e-003**		**3.1800e-003**	**3.1800e-003**		**3.1800e-003**	**3.1800e-003**	**0.0000**	**91.7603**	**91.7603**	**3.0500e-003**	**0.0000**	**91.8243**

Unmitigated Construction Off-Site

	ROG	NOx	CO	SO2	Fugitive PM10	Exhaust PM10	PM10 Total	Fugitive PM2.5	Exhaust PM2.5	PM2.5 Total	Bio- CO2	NBio- CO2	Total CO2	CH4	N2O	CO2e
Category	tons/yr										MT/yr					
Hauling	0.0000	0.0000	0.0000	0.0000	0.0000	0.0000	0.0000	0.0000	0.0000	0.0000	0.0000	0.0000	0.0000	0.0000	0.0000	0.0000
Vendor	0.0000	0.0000	0.0000	0.0000	0.0000	0.0000	0.0000	0.0000	0.0000	0.0000	0.0000	0.0000	0.0000	0.0000	0.0000	0.0000
Worker	0.0000	0.0000	0.0000	0.0000	0.0000	0.0000	0.0000	0.0000	0.0000	0.0000	0.0000	0.0000	0.0000	0.0000	0.0000	0.0000
Total	**0.0000**	**0.0000**	**0.0000**	**0.0000**	**0.0000**	**0.0000**	**0.0000**	**0.0000**	**0.0000**	**0.0000**	**0.0000**	**0.0000**	**0.0000**	**0.0000**	**0.0000**	**0.0000**

3.51 Year 16 Month 2 - 2035

Mitigated Construction On-Site

	ROG	NOx	CO	SO2	Fugitive PM10	Exhaust PM10	PM10 Total	Fugitive PM2.5	Exhaust PM2.5	PM2.5 Total	Bio- CO2	NBio- CO2	Total CO2	CH4	N2O	CO2e
Category	tons/yr										MT/yr					
Off-Road	0.0123	0.1123	0.5489	1.0900e-003		1.4200e-003	1.4200e-003		1.4200e-003	1.4200e-003	0.0000	91.7602	91.7602	3.0500e-003	0.0000	91.8242
Total	**0.0123**	**0.1123**	**0.5489**	**1.0900e-003**		**1.4200e-003**	**1.4200e-003**		**1.4200e-003**	**1.4200e-003**	**0.0000**	**91.7602**	**91.7602**	**3.0500e-003**	**0.0000**	**91.8242**

Mitigated Construction Off-Site

	ROG	NOx	CO	SO2	Fugitive PM10	Exhaust PM10	PM10 Total	Fugitive PM2.5	Exhaust PM2.5	PM2.5 Total	Bio- CO2	NBio- CO2	Total CO2	CH4	N2O	CO2e
Category	tons/yr										MT/yr					
Hauling	0.0000	0.0000	0.0000	0.0000	0.0000	0.0000	0.0000	0.0000	0.0000	0.0000	0.0000	0.0000	0.0000	0.0000	0.0000	0.0000
Vendor	0.0000	0.0000	0.0000	0.0000	0.0000	0.0000	0.0000	0.0000	0.0000	0.0000	0.0000	0.0000	0.0000	0.0000	0.0000	0.0000
Worker	0.0000	0.0000	0.0000	0.0000	0.0000	0.0000	0.0000	0.0000	0.0000	0.0000	0.0000	0.0000	0.0000	0.0000	0.0000	0.0000
Total	**0.0000**	**0.0000**	**0.0000**	**0.0000**	**0.0000**	**0.0000**	**0.0000**	**0.0000**	**0.0000**	**0.0000**	**0.0000**	**0.0000**	**0.0000**	**0.0000**	**0.0000**	**0.0000**

3.52 Year 16 Month 3 - 2035

Unmitigated Construction On-Site

	ROG	NOx	CO	SO2	Fugitive PM10	Exhaust PM10	PM10 Total	Fugitive PM2.5	Exhaust PM2.5	PM2.5 Total	Bio- CO2	NBio- CO2	Total CO2	CH4	N2O	CO2e
Category	tons/yr										MT/yr					
Off-Road	0.0429	0.1597	0.4873	1.2200e-003		3.5700e-003	3.5700e-003		3.5700e-003	3.5700e-003	0.0000	103.2303	103.2303	3.4300e-003	0.0000	103.3023
Total	**0.0429**	**0.1597**	**0.4873**	**1.2200e-003**		**3.5700e-003**	**3.5700e-003**		**3.5700e-003**	**3.5700e-003**	**0.0000**	**103.2303**	**103.2303**	**3.4300e-003**	**0.0000**	**103.3023**

Unmitigated Construction Off-Site

	ROG	NOx	CO	SO2	Fugitive PM10	Exhaust PM10	PM10 Total	Fugitive PM2.5	Exhaust PM2.5	PM2.5 Total	Bio- CO2	NBio- CO2	Total CO2	CH4	N2O	CO2e
Category	tons/yr										MT/yr					
Hauling	0.0000	0.0000	0.0000	0.0000	0.0000	0.0000	0.0000	0.0000	0.0000	0.0000	0.0000	0.0000	0.0000	0.0000	0.0000	0.0000
Vendor	0.0000	0.0000	0.0000	0.0000	0.0000	0.0000	0.0000	0.0000	0.0000	0.0000	0.0000	0.0000	0.0000	0.0000	0.0000	0.0000
Worker	0.0000	0.0000	0.0000	0.0000	0.0000	0.0000	0.0000	0.0000	0.0000	0.0000	0.0000	0.0000	0.0000	0.0000	0.0000	0.0000
Total	**0.0000**	**0.0000**	**0.0000**	**0.0000**	**0.0000**	**0.0000**	**0.0000**	**0.0000**	**0.0000**	**0.0000**	**0.0000**	**0.0000**	**0.0000**	**0.0000**	**0.0000**	**0.0000**

3.52 Year 16 Month 3 - 2035

Mitigated Construction On-Site

	ROG	NOx	CO	SO2	Fugitive PM10	Exhaust PM10	PM10 Total	Fugitive PM2.5	Exhaust PM2.5	PM2.5 Total	Bio- CO2	NBio- CO2	Total CO2	CH4	N2O	CO2e
Category	tons/yr										MT/yr					
Off-Road	0.0138	0.1264	0.6176	1.2200e-003		1.6000e-003	1.6000e-003		1.6000e-003	1.6000e-003	0.0000	103.2302	103.2302	3.4300e-003	0.0000	103.3022
Total	**0.0138**	**0.1264**	**0.6176**	**1.2200e-003**		**1.6000e-003**	**1.6000e-003**		**1.6000e-003**	**1.6000e-003**	**0.0000**	**103.2302**	**103.2302**	**3.4300e-003**	**0.0000**	**103.3022**

Mitigated Construction Off-Site

	ROG	NOx	CO	SO2	Fugitive PM10	Exhaust PM10	PM10 Total	Fugitive PM2.5	Exhaust PM2.5	PM2.5 Total	Bio- CO2	NBio- CO2	Total CO2	CH4	N2O	CO2e
Category	tons/yr										MT/yr					
Hauling	0.0000	0.0000	0.0000	0.0000	0.0000	0.0000	0.0000	0.0000	0.0000	0.0000	0.0000	0.0000	0.0000	0.0000	0.0000	0.0000
Vendor	0.0000	0.0000	0.0000	0.0000	0.0000	0.0000	0.0000	0.0000	0.0000	0.0000	0.0000	0.0000	0.0000	0.0000	0.0000	0.0000
Worker	0.0000	0.0000	0.0000	0.0000	0.0000	0.0000	0.0000	0.0000	0.0000	0.0000	0.0000	0.0000	0.0000	0.0000	0.0000	0.0000
Total	**0.0000**	**0.0000**	**0.0000**	**0.0000**	**0.0000**	**0.0000**	**0.0000**	**0.0000**	**0.0000**	**0.0000**	**0.0000**	**0.0000**	**0.0000**	**0.0000**	**0.0000**	**0.0000**

3.53 Year 16 Month 4 - 2035

Unmitigated Construction On-Site

	ROG	NOx	CO	SO2	Fugitive PM10	Exhaust PM10	PM10 Total	Fugitive PM2.5	Exhaust PM2.5	PM2.5 Total	Bio- CO2	NBio- CO2	Total CO2	CH4	N2O	CO2e
Category	tons/yr										MT/yr					
Off-Road	0.1071	0.3332	0.8845	2.9600e-003		0.0102	0.0102		0.0102	0.0102	0.0000	264.8614	264.8614	8.5300e-003	0.0000	265.0406
Total	**0.1071**	**0.3332**	**0.8845**	**2.9600e-003**		**0.0102**	**0.0102**		**0.0102**	**0.0102**	**0.0000**	**264.8614**	**264.8614**	**8.5300e-003**	**0.0000**	**265.0406**

Unmitigated Construction Off-Site

	ROG	NOx	CO	SO2	Fugitive PM10	Exhaust PM10	PM10 Total	Fugitive PM2.5	Exhaust PM2.5	PM2.5 Total	Bio- CO2	NBio- CO2	Total CO2	CH4	N2O	CO2e
Category	tons/yr										MT/yr					
Hauling	0.0000	0.0000	0.0000	0.0000	0.0000	0.0000	0.0000	0.0000	0.0000	0.0000	0.0000	0.0000	0.0000	0.0000	0.0000	0.0000
Vendor	0.0000	0.0000	0.0000	0.0000	0.0000	0.0000	0.0000	0.0000	0.0000	0.0000	0.0000	0.0000	0.0000	0.0000	0.0000	0.0000
Worker	0.0000	0.0000	0.0000	0.0000	0.0000	0.0000	0.0000	0.0000	0.0000	0.0000	0.0000	0.0000	0.0000	0.0000	0.0000	0.0000
Total	**0.0000**	**0.0000**	**0.0000**	**0.0000**	**0.0000**	**0.0000**	**0.0000**	**0.0000**	**0.0000**	**0.0000**	**0.0000**	**0.0000**	**0.0000**	**0.0000**	**0.0000**	**0.0000**

3.53 Year 16 Month 4 - 2035

Mitigated Construction On-Site

	ROG	NOx	CO	SO2	Fugitive PM10	Exhaust PM10	PM10 Total	Fugitive PM2.5	Exhaust PM2.5	PM2.5 Total	Bio- CO2	NBio- CO2	Total CO2	CH4	N2O	CO2e
Category	tons/yr										MT/yr					
Off-Road	0.0325	0.2024	1.3393	2.9600e-003		4.1100e-003	4.1100e-003		4.1100e-003	4.1100e-003	0.0000	264.8611	264.8611	8.5300e-003	0.0000	265.0403
Total	**0.0325**	**0.2024**	**1.3393**	**2.9600e-003**		**4.1100e-003**	**4.1100e-003**		**4.1100e-003**	**4.1100e-003**	**0.0000**	**264.8611**	**264.8611**	**8.5300e-003**	**0.0000**	**265.0403**

Mitigated Construction Off-Site

	ROG	NOx	CO	SO2	Fugitive PM10	Exhaust PM10	PM10 Total	Fugitive PM2.5	Exhaust PM2.5	PM2.5 Total	Bio- CO2	NBio- CO2	Total CO2	CH4	N2O	CO2e
Category	tons/yr										MT/yr					
Hauling	0.0000	0.0000	0.0000	0.0000	0.0000	0.0000	0.0000	0.0000	0.0000	0.0000	0.0000	0.0000	0.0000	0.0000	0.0000	0.0000
Vendor	0.0000	0.0000	0.0000	0.0000	0.0000	0.0000	0.0000	0.0000	0.0000	0.0000	0.0000	0.0000	0.0000	0.0000	0.0000	0.0000
Worker	0.0000	0.0000	0.0000	0.0000	0.0000	0.0000	0.0000	0.0000	0.0000	0.0000	0.0000	0.0000	0.0000	0.0000	0.0000	0.0000
Total	**0.0000**	**0.0000**	**0.0000**	**0.0000**	**0.0000**	**0.0000**	**0.0000**	**0.0000**	**0.0000**	**0.0000**	**0.0000**	**0.0000**	**0.0000**	**0.0000**	**0.0000**	**0.0000**

3.54 Year 16 Month 5 - 2035

Unmitigated Construction On-Site

	ROG	NOx	CO	SO2	Fugitive PM10	Exhaust PM10	PM10 Total	Fugitive PM2.5	Exhaust PM2.5	PM2.5 Total	Bio- CO2	NBio- CO2	Total CO2	CH4	N2O	CO2e
Category	tons/yr										MT/yr					
Off-Road	0.0971	0.3052	0.7629	2.6500e-003		9.2000e-003	9.2000e-003		9.2000e-003	9.2000e-003	0.0000	239.6668	239.6668	7.7300e-003	0.0000	239.8291
Total	**0.0971**	**0.3052**	**0.7629**	**2.6500e-003**		**9.2000e-003**	**9.2000e-003**		**9.2000e-003**	**9.2000e-003**	**0.0000**	**239.6668**	**239.6668**	**7.7300e-003**	**0.0000**	**239.8291**

Unmitigated Construction Off-Site

	ROG	NOx	CO	SO2	Fugitive PM10	Exhaust PM10	PM10 Total	Fugitive PM2.5	Exhaust PM2.5	PM2.5 Total	Bio- CO2	NBio- CO2	Total CO2	CH4	N2O	CO2e
Category	tons/yr										MT/yr					
Hauling	0.0000	0.0000	0.0000	0.0000	0.0000	0.0000	0.0000	0.0000	0.0000	0.0000	0.0000	0.0000	0.0000	0.0000	0.0000	0.0000
Vendor	0.0000	0.0000	0.0000	0.0000	0.0000	0.0000	0.0000	0.0000	0.0000	0.0000	0.0000	0.0000	0.0000	0.0000	0.0000	0.0000
Worker	0.0000	0.0000	0.0000	0.0000	0.0000	0.0000	0.0000	0.0000	0.0000	0.0000	0.0000	0.0000	0.0000	0.0000	0.0000	0.0000
Total	**0.0000**	**0.0000**	**0.0000**	**0.0000**	**0.0000**	**0.0000**	**0.0000**	**0.0000**	**0.0000**	**0.0000**	**0.0000**	**0.0000**	**0.0000**	**0.0000**	**0.0000**	**0.0000**

3.54 Year 16 Month 5 - 2035

Mitigated Construction On-Site

	ROG	NOx	CO	SO2	Fugitive PM10	Exhaust PM10	PM10 Total	Fugitive PM2.5	Exhaust PM2.5	PM2.5 Total	Bio- CO2	NBio- CO2	Total CO2	CH4	N2O	CO2e
Category	tons/yr										MT/yr					
Off-Road	0.0292	0.1769	1.1874	2.6500e-003		3.7200e-003	3.7200e-003		3.7200e-003	3.7200e-003	0.0000	239.6665	239.6665	7.7300e-003	0.0000	239.8288
Total	**0.0292**	**0.1769**	**1.1874**	**2.6500e-003**		**3.7200e-003**	**3.7200e-003**		**3.7200e-003**	**3.7200e-003**	**0.0000**	**239.6665**	**239.6665**	**7.7300e-003**	**0.0000**	**239.8288**

Mitigated Construction Off-Site

	ROG	NOx	CO	SO2	Fugitive PM10	Exhaust PM10	PM10 Total	Fugitive PM2.5	Exhaust PM2.5	PM2.5 Total	Bio- CO2	NBio- CO2	Total CO2	CH4	N2O	CO2e
Category	tons/yr										MT/yr					
Hauling	0.0000	0.0000	0.0000	0.0000	0.0000	0.0000	0.0000	0.0000	0.0000	0.0000	0.0000	0.0000	0.0000	0.0000	0.0000	0.0000
Vendor	0.0000	0.0000	0.0000	0.0000	0.0000	0.0000	0.0000	0.0000	0.0000	0.0000	0.0000	0.0000	0.0000	0.0000	0.0000	0.0000
Worker	0.0000	0.0000	0.0000	0.0000	0.0000	0.0000	0.0000	0.0000	0.0000	0.0000	0.0000	0.0000	0.0000	0.0000	0.0000	0.0000
Total	**0.0000**	**0.0000**	**0.0000**	**0.0000**	**0.0000**	**0.0000**	**0.0000**	**0.0000**	**0.0000**	**0.0000**	**0.0000**	**0.0000**	**0.0000**	**0.0000**	**0.0000**	**0.0000**

3.55 Year 16 Month 6 - 2035

Unmitigated Construction On-Site

	ROG	NOx	CO	SO2	Fugitive PM10	Exhaust PM10	PM10 Total	Fugitive PM2.5	Exhaust PM2.5	PM2.5 Total	Bio- CO2	NBio- CO2	Total CO2	CH4	N2O	CO2e
Category	tons/yr										MT/yr					
Off-Road	0.0935	0.2939	0.7346	2.5600e-003		8.8600e-003	8.8600e-003		8.8600e-003	8.8600e-003	0.0000	230.7902	230.7902	7.4400e-003	0.0000	230.9465
Total	**0.0935**	**0.2939**	**0.7346**	**2.5600e-003**		**8.8600e-003**	**8.8600e-003**		**8.8600e-003**	**8.8600e-003**	**0.0000**	**230.7902**	**230.7902**	**7.4400e-003**	**0.0000**	**230.9465**

Unmitigated Construction Off-Site

	ROG	NOx	CO	SO2	Fugitive PM10	Exhaust PM10	PM10 Total	Fugitive PM2.5	Exhaust PM2.5	PM2.5 Total	Bio- CO2	NBio- CO2	Total CO2	CH4	N2O	CO2e
Category	tons/yr										MT/yr					
Hauling	0.0000	0.0000	0.0000	0.0000	0.0000	0.0000	0.0000	0.0000	0.0000	0.0000	0.0000	0.0000	0.0000	0.0000	0.0000	0.0000
Vendor	0.0000	0.0000	0.0000	0.0000	0.0000	0.0000	0.0000	0.0000	0.0000	0.0000	0.0000	0.0000	0.0000	0.0000	0.0000	0.0000
Worker	0.0000	0.0000	0.0000	0.0000	0.0000	0.0000	0.0000	0.0000	0.0000	0.0000	0.0000	0.0000	0.0000	0.0000	0.0000	0.0000
Total	**0.0000**	**0.0000**	**0.0000**	**0.0000**	**0.0000**	**0.0000**	**0.0000**	**0.0000**	**0.0000**	**0.0000**	**0.0000**	**0.0000**	**0.0000**	**0.0000**	**0.0000**	**0.0000**

3.55 Year 16 Month 6 - 2035

Mitigated Construction On-Site

	ROG	NOx	CO	SO2	Fugitive PM10	Exhaust PM10	PM10 Total	Fugitive PM2.5	Exhaust PM2.5	PM2.5 Total	Bio- CO2	NBio- CO2	Total CO2	CH4	N2O	CO2e
Category	tons/yr										MT/yr					
Off-Road	0.0282	0.1703	1.1434	2.5600e-003		3.5800e-003	3.5800e-003		3.5800e-003	3.5800e-003	0.0000	230.7899	230.7899	7.4400e-003	0.0000	230.9462
Total	**0.0282**	**0.1703**	**1.1434**	**2.5600e-003**		**3.5800e-003**	**3.5800e-003**		**3.5800e-003**	**3.5800e-003**	**0.0000**	**230.7899**	**230.7899**	**7.4400e-003**	**0.0000**	**230.9462**

Mitigated Construction Off-Site

	ROG	NOx	CO	SO2	Fugitive PM10	Exhaust PM10	PM10 Total	Fugitive PM2.5	Exhaust PM2.5	PM2.5 Total	Bio- CO2	NBio- CO2	Total CO2	CH4	N2O	CO2e
Category	tons/yr										MT/yr					
Hauling	0.0000	0.0000	0.0000	0.0000	0.0000	0.0000	0.0000	0.0000	0.0000	0.0000	0.0000	0.0000	0.0000	0.0000	0.0000	0.0000
Vendor	0.0000	0.0000	0.0000	0.0000	0.0000	0.0000	0.0000	0.0000	0.0000	0.0000	0.0000	0.0000	0.0000	0.0000	0.0000	0.0000
Worker	0.0000	0.0000	0.0000	0.0000	0.0000	0.0000	0.0000	0.0000	0.0000	0.0000	0.0000	0.0000	0.0000	0.0000	0.0000	0.0000
Total	**0.0000**	**0.0000**	**0.0000**	**0.0000**	**0.0000**	**0.0000**	**0.0000**	**0.0000**	**0.0000**	**0.0000**	**0.0000**	**0.0000**	**0.0000**	**0.0000**	**0.0000**	**0.0000**

3.56 Year 16 Month 7 - 2035

Unmitigated Construction On-Site

	ROG	NOx	CO	SO2	Fugitive PM10	Exhaust PM10	PM10 Total	Fugitive PM2.5	Exhaust PM2.5	PM2.5 Total	Bio- CO2	NBio- CO2	Total CO2	CH4	N2O	CO2e
Category	tons/yr										MT/yr					
Off-Road	0.0935	0.2939	0.7346	2.5600e-003		8.8600e-003	8.8600e-003		8.8600e-003	8.8600e-003	0.0000	230.7902	230.7902	7.4400e-003	0.0000	230.9465
Total	**0.0935**	**0.2939**	**0.7346**	**2.5600e-003**		**8.8600e-003**	**8.8600e-003**		**8.8600e-003**	**8.8600e-003**	**0.0000**	**230.7902**	**230.7902**	**7.4400e-003**	**0.0000**	**230.9465**

Unmitigated Construction Off-Site

	ROG	NOx	CO	SO2	Fugitive PM10	Exhaust PM10	PM10 Total	Fugitive PM2.5	Exhaust PM2.5	PM2.5 Total	Bio- CO2	NBio- CO2	Total CO2	CH4	N2O	CO2e
Category	tons/yr										MT/yr					
Hauling	0.0000	0.0000	0.0000	0.0000	0.0000	0.0000	0.0000	0.0000	0.0000	0.0000	0.0000	0.0000	0.0000	0.0000	0.0000	0.0000
Vendor	0.0000	0.0000	0.0000	0.0000	0.0000	0.0000	0.0000	0.0000	0.0000	0.0000	0.0000	0.0000	0.0000	0.0000	0.0000	0.0000
Worker	0.0000	0.0000	0.0000	0.0000	0.0000	0.0000	0.0000	0.0000	0.0000	0.0000	0.0000	0.0000	0.0000	0.0000	0.0000	0.0000
Total	**0.0000**	**0.0000**	**0.0000**	**0.0000**	**0.0000**	**0.0000**	**0.0000**	**0.0000**	**0.0000**	**0.0000**	**0.0000**	**0.0000**	**0.0000**	**0.0000**	**0.0000**	**0.0000**

3.56 Year 16 Month 7 - 2035

Mitigated Construction On-Site

	ROG	NOx	CO	SO2	Fugitive PM10	Exhaust PM10	PM10 Total	Fugitive PM2.5	Exhaust PM2.5	PM2.5 Total	Bio- CO2	NBio- CO2	Total CO2	CH4	N2O	CO2e
Category	tons/yr										MT/yr					
Off-Road	0.0282	0.1703	1.1434	2.5600e-003		3.5800e-003	3.5800e-003		3.5800e-003	3.5800e-003	0.0000	230.7899	230.7899	7.4400e-003	0.0000	230.9462
Total	**0.0282**	**0.1703**	**1.1434**	**2.5600e-003**		**3.5800e-003**	**3.5800e-003**		**3.5800e-003**	**3.5800e-003**	**0.0000**	**230.7899**	**230.7899**	**7.4400e-003**	**0.0000**	**230.9462**

Mitigated Construction Off-Site

	ROG	NOx	CO	SO2	Fugitive PM10	Exhaust PM10	PM10 Total	Fugitive PM2.5	Exhaust PM2.5	PM2.5 Total	Bio- CO2	NBio- CO2	Total CO2	CH4	N2O	CO2e
Category	tons/yr										MT/yr					
Hauling	0.0000	0.0000	0.0000	0.0000	0.0000	0.0000	0.0000	0.0000	0.0000	0.0000	0.0000	0.0000	0.0000	0.0000	0.0000	0.0000
Vendor	0.0000	0.0000	0.0000	0.0000	0.0000	0.0000	0.0000	0.0000	0.0000	0.0000	0.0000	0.0000	0.0000	0.0000	0.0000	0.0000
Worker	0.0000	0.0000	0.0000	0.0000	0.0000	0.0000	0.0000	0.0000	0.0000	0.0000	0.0000	0.0000	0.0000	0.0000	0.0000	0.0000
Total	**0.0000**	**0.0000**	**0.0000**	**0.0000**	**0.0000**	**0.0000**	**0.0000**	**0.0000**	**0.0000**	**0.0000**	**0.0000**	**0.0000**	**0.0000**	**0.0000**	**0.0000**	**0.0000**

3.57 Year 16 Month 8 - 2035

Unmitigated Construction On-Site

	ROG	NOx	CO	SO2	Fugitive PM10	Exhaust PM10	PM10 Total	Fugitive PM2.5	Exhaust PM2.5	PM2.5 Total	Bio- CO2	NBio- CO2	Total CO2	CH4	N2O	CO2e
Category	tons/yr										MT/yr					
Off-Road	0.0909	0.2785	0.7161	2.5000e-003		8.7700e-003	8.7700e-003		8.7700e-003	8.7700e-003	0.0000	226.7102	226.7102	7.2300e-003	0.0000	226.8620
Total	**0.0909**	**0.2785**	**0.7161**	**2.5000e-003**		**8.7700e-003**	**8.7700e-003**		**8.7700e-003**	**8.7700e-003**	**0.0000**	**226.7102**	**226.7102**	**7.2300e-003**	**0.0000**	**226.8620**

Unmitigated Construction Off-Site

	ROG	NOx	CO	SO2	Fugitive PM10	Exhaust PM10	PM10 Total	Fugitive PM2.5	Exhaust PM2.5	PM2.5 Total	Bio- CO2	NBio- CO2	Total CO2	CH4	N2O	CO2e
Category	tons/yr										MT/yr					
Hauling	0.0000	0.0000	0.0000	0.0000	0.0000	0.0000	0.0000	0.0000	0.0000	0.0000	0.0000	0.0000	0.0000	0.0000	0.0000	0.0000
Vendor	0.0000	0.0000	0.0000	0.0000	0.0000	0.0000	0.0000	0.0000	0.0000	0.0000	0.0000	0.0000	0.0000	0.0000	0.0000	0.0000
Worker	0.0000	0.0000	0.0000	0.0000	0.0000	0.0000	0.0000	0.0000	0.0000	0.0000	0.0000	0.0000	0.0000	0.0000	0.0000	0.0000
Total	**0.0000**	**0.0000**	**0.0000**	**0.0000**	**0.0000**	**0.0000**	**0.0000**	**0.0000**	**0.0000**	**0.0000**	**0.0000**	**0.0000**	**0.0000**	**0.0000**	**0.0000**	**0.0000**

3.57 Year 16 Month 8 - 2035

Mitigated Construction On-Site

	ROG	NOx	CO	SO2	Fugitive PM10	Exhaust PM10	PM10 Total	Fugitive PM2.5	Exhaust PM2.5	PM2.5 Total	Bio- CO2	NBio- CO2	Total CO2	CH4	N2O	CO2e
Category	tons/yr										MT/yr					
Off-Road	0.0274	0.1564	1.1214	2.5000e-003		3.5200e-003	3.5200e-003		3.5200e-003	3.5200e-003	0.0000	226.7099	226.7099	7.2300e-003	0.0000	226.8617
Total	**0.0274**	**0.1564**	**1.1214**	**2.5000e-003**		**3.5200e-003**	**3.5200e-003**		**3.5200e-003**	**3.5200e-003**	**0.0000**	**226.7099**	**226.7099**	**7.2300e-003**	**0.0000**	**226.8617**

Mitigated Construction Off-Site

	ROG	NOx	CO	SO2	Fugitive PM10	Exhaust PM10	PM10 Total	Fugitive PM2.5	Exhaust PM2.5	PM2.5 Total	Bio- CO2	NBio- CO2	Total CO2	CH4	N2O	CO2e
Category	tons/yr										MT/yr					
Hauling	0.0000	0.0000	0.0000	0.0000	0.0000	0.0000	0.0000	0.0000	0.0000	0.0000	0.0000	0.0000	0.0000	0.0000	0.0000	0.0000
Vendor	0.0000	0.0000	0.0000	0.0000	0.0000	0.0000	0.0000	0.0000	0.0000	0.0000	0.0000	0.0000	0.0000	0.0000	0.0000	0.0000
Worker	0.0000	0.0000	0.0000	0.0000	0.0000	0.0000	0.0000	0.0000	0.0000	0.0000	0.0000	0.0000	0.0000	0.0000	0.0000	0.0000
Total	**0.0000**	**0.0000**	**0.0000**	**0.0000**	**0.0000**	**0.0000**	**0.0000**	**0.0000**	**0.0000**	**0.0000**	**0.0000**	**0.0000**	**0.0000**	**0.0000**	**0.0000**	**0.0000**

3.58 Year 16 Month 9 - 2035

Unmitigated Construction On-Site

	ROG	NOx	CO	SO2	Fugitive PM10	Exhaust PM10	PM10 Total	Fugitive PM2.5	Exhaust PM2.5	PM2.5 Total	Bio- CO2	NBio- CO2	Total CO2	CH4	N2O	CO2e
Category	tons/yr										MT/yr					
Off-Road	0.0637	0.1769	0.4126	1.7200e-003		6.6100e-003	6.6100e-003		6.6100e-003	6.6100e-003	0.0000	159.9662	159.9662	5.0600e-003	0.0000	160.0725
Total	**0.0637**	**0.1769**	**0.4126**	**1.7200e-003**		**6.6100e-003**	**6.6100e-003**		**6.6100e-003**	**6.6100e-003**	**0.0000**	**159.9662**	**159.9662**	**5.0600e-003**	**0.0000**	**160.0725**

Unmitigated Construction Off-Site

	ROG	NOx	CO	SO2	Fugitive PM10	Exhaust PM10	PM10 Total	Fugitive PM2.5	Exhaust PM2.5	PM2.5 Total	Bio- CO2	NBio- CO2	Total CO2	CH4	N2O	CO2e
Category	tons/yr										MT/yr					
Hauling	0.0000	0.0000	0.0000	0.0000	0.0000	0.0000	0.0000	0.0000	0.0000	0.0000	0.0000	0.0000	0.0000	0.0000	0.0000	0.0000
Vendor	0.0000	0.0000	0.0000	0.0000	0.0000	0.0000	0.0000	0.0000	0.0000	0.0000	0.0000	0.0000	0.0000	0.0000	0.0000	0.0000
Worker	0.0000	0.0000	0.0000	0.0000	0.0000	0.0000	0.0000	0.0000	0.0000	0.0000	0.0000	0.0000	0.0000	0.0000	0.0000	0.0000
Total	**0.0000**	**0.0000**	**0.0000**	**0.0000**	**0.0000**	**0.0000**	**0.0000**	**0.0000**	**0.0000**	**0.0000**	**0.0000**	**0.0000**	**0.0000**	**0.0000**	**0.0000**	**0.0000**

3.58 Year 16 Month 9 - 2035

Mitigated Construction On-Site

	ROG	NOx	CO	SO2	Fugitive PM10	Exhaust PM10	PM10 Total	Fugitive PM2.5	Exhaust PM2.5	PM2.5 Total	Bio- CO2	NBio- CO2	Total CO2	CH4	N2O	CO2e
Category	tons/yr										MT/yr					
Off-Road	0.0186	0.0807	0.7278	1.7200e-003		2.4800e-003	2.4800e-003		2.4800e-003	2.4800e-003	0.0000	159.9660	159.9660	5.0600e-003	0.0000	160.0723
Total	**0.0186**	**0.0807**	**0.7278**	**1.7200e-003**		**2.4800e-003**	**2.4800e-003**		**2.4800e-003**	**2.4800e-003**	**0.0000**	**159.9660**	**159.9660**	**5.0600e-003**	**0.0000**	**160.0723**

Mitigated Construction Off-Site

	ROG	NOx	CO	SO2	Fugitive PM10	Exhaust PM10	PM10 Total	Fugitive PM2.5	Exhaust PM2.5	PM2.5 Total	Bio- CO2	NBio- CO2	Total CO2	CH4	N2O	CO2e
Category	tons/yr										MT/yr					
Hauling	0.0000	0.0000	0.0000	0.0000	0.0000	0.0000	0.0000	0.0000	0.0000	0.0000	0.0000	0.0000	0.0000	0.0000	0.0000	0.0000
Vendor	0.0000	0.0000	0.0000	0.0000	0.0000	0.0000	0.0000	0.0000	0.0000	0.0000	0.0000	0.0000	0.0000	0.0000	0.0000	0.0000
Worker	0.0000	0.0000	0.0000	0.0000	0.0000	0.0000	0.0000	0.0000	0.0000	0.0000	0.0000	0.0000	0.0000	0.0000	0.0000	0.0000
Total	**0.0000**	**0.0000**	**0.0000**	**0.0000**	**0.0000**	**0.0000**	**0.0000**	**0.0000**	**0.0000**	**0.0000**	**0.0000**	**0.0000**	**0.0000**	**0.0000**	**0.0000**	**0.0000**

3.59 Year 16 Month 10 - 2035

Unmitigated Construction On-Site

	ROG	NOx	CO	SO2	Fugitive PM10	Exhaust PM10	PM10 Total	Fugitive PM2.5	Exhaust PM2.5	PM2.5 Total	Bio- CO2	NBio- CO2	Total CO2	CH4	N2O	CO2e
Category	tons/yr										MT/yr					
Off-Road	0.0688	0.1911	0.4457	1.8500e-003		7.1400e-003	7.1400e-003		7.1400e-003	7.1400e-003	0.0000	172.7635	172.7635	5.4600e-003	0.0000	172.8783
Total	**0.0688**	**0.1911**	**0.4457**	**1.8500e-003**		**7.1400e-003**	**7.1400e-003**		**7.1400e-003**	**7.1400e-003**	**0.0000**	**172.7635**	**172.7635**	**5.4600e-003**	**0.0000**	**172.8783**

Unmitigated Construction Off-Site

	ROG	NOx	CO	SO2	Fugitive PM10	Exhaust PM10	PM10 Total	Fugitive PM2.5	Exhaust PM2.5	PM2.5 Total	Bio- CO2	NBio- CO2	Total CO2	CH4	N2O	CO2e
Category	tons/yr										MT/yr					
Hauling	0.0000	0.0000	0.0000	0.0000	0.0000	0.0000	0.0000	0.0000	0.0000	0.0000	0.0000	0.0000	0.0000	0.0000	0.0000	0.0000
Vendor	0.0000	0.0000	0.0000	0.0000	0.0000	0.0000	0.0000	0.0000	0.0000	0.0000	0.0000	0.0000	0.0000	0.0000	0.0000	0.0000
Worker	0.0000	0.0000	0.0000	0.0000	0.0000	0.0000	0.0000	0.0000	0.0000	0.0000	0.0000	0.0000	0.0000	0.0000	0.0000	0.0000
Total	**0.0000**	**0.0000**	**0.0000**	**0.0000**	**0.0000**	**0.0000**	**0.0000**	**0.0000**	**0.0000**	**0.0000**	**0.0000**	**0.0000**	**0.0000**	**0.0000**	**0.0000**	**0.0000**

3.59 Year 16 Month 10 - 2035

Mitigated Construction On-Site

	ROG	NOx	CO	SO2	Fugitive PM10	Exhaust PM10	PM10 Total	Fugitive PM2.5	Exhaust PM2.5	PM2.5 Total	Bio- CO2	NBio- CO2	Total CO2	CH4	N2O	CO2e
Category	tons/yr										MT/yr					
Off-Road	0.0201	0.0871	0.7860	1.8500e-003		2.6800e-003	2.6800e-003		2.6800e-003	2.6800e-003	0.0000	172.7633	172.7633	5.4600e-003	0.0000	172.8781
Total	**0.0201**	**0.0871**	**0.7860**	**1.8500e-003**		**2.6800e-003**	**2.6800e-003**		**2.6800e-003**	**2.6800e-003**	**0.0000**	**172.7633**	**172.7633**	**5.4600e-003**	**0.0000**	**172.8781**

Mitigated Construction Off-Site

	ROG	NOx	CO	SO2	Fugitive PM10	Exhaust PM10	PM10 Total	Fugitive PM2.5	Exhaust PM2.5	PM2.5 Total	Bio- CO2	NBio- CO2	Total CO2	CH4	N2O	CO2e
Category	tons/yr										MT/yr					
Hauling	0.0000	0.0000	0.0000	0.0000	0.0000	0.0000	0.0000	0.0000	0.0000	0.0000	0.0000	0.0000	0.0000	0.0000	0.0000	0.0000
Vendor	0.0000	0.0000	0.0000	0.0000	0.0000	0.0000	0.0000	0.0000	0.0000	0.0000	0.0000	0.0000	0.0000	0.0000	0.0000	0.0000
Worker	0.0000	0.0000	0.0000	0.0000	0.0000	0.0000	0.0000	0.0000	0.0000	0.0000	0.0000	0.0000	0.0000	0.0000	0.0000	0.0000
Total	**0.0000**	**0.0000**	**0.0000**	**0.0000**	**0.0000**	**0.0000**	**0.0000**	**0.0000**	**0.0000**	**0.0000**	**0.0000**	**0.0000**	**0.0000**	**0.0000**	**0.0000**	**0.0000**

3.60 Year 16 Month 11 - 2035

Unmitigated Construction Off-Site

	ROG	NOx	CO	SO2	Fugitive PM10	Exhaust PM10	PM10 Total	Fugitive PM2.5	Exhaust PM2.5	PM2.5 Total	Bio- CO2	NBio- CO2	Total CO2	CH4	N2O	CO2e
Category	tons/yr										MT/yr					
Hauling					0.0000	0.0000	0.0000	0.0000	0.0000	0.0000	0.0000	0.0000	0.0000	0.0000	0.0000	0.0000
Vendor					0.0000	0.0000	0.0000	0.0000	0.0000	0.0000	0.0000	0.0000	0.0000	0.0000	0.0000	0.0000
Worker					0.0000	0.0000	0.0000	0.0000	0.0000	0.0000	0.0000	0.0000	0.0000	0.0000	0.0000	0.0000
Total					**0.0000**	**0.0000**	**0.0000**	**0.0000**	**0.0000**	**0.0000**	**0.0000**	**0.0000**	**0.0000**	**0.0000**	**0.0000**	**0.0000**

Mitigated Construction Off-Site

	ROG	NOx	CO	SO2	Fugitive PM10	Exhaust PM10	PM10 Total	Fugitive PM2.5	Exhaust PM2.5	PM2.5 Total	Bio- CO2	NBio- CO2	Total CO2	CH4	N2O	CO2e
Category	tons/yr										MT/yr					
Hauling					0.0000	0.0000	0.0000	0.0000	0.0000	0.0000	0.0000	0.0000	0.0000	0.0000	0.0000	0.0000
Vendor					0.0000	0.0000	0.0000	0.0000	0.0000	0.0000	0.0000	0.0000	0.0000	0.0000	0.0000	0.0000
Worker					0.0000	0.0000	0.0000	0.0000	0.0000	0.0000	0.0000	0.0000	0.0000	0.0000	0.0000	0.0000
Total					**0.0000**	**0.0000**	**0.0000**	**0.0000**	**0.0000**	**0.0000**	**0.0000**	**0.0000**	**0.0000**	**0.0000**	**0.0000**	**0.0000**

3.61 Year 16 Month 12 - 2035

Unmitigated Construction Off-Site

	ROG	NOx	CO	SO2	Fugitive PM10	Exhaust PM10	PM10 Total	Fugitive PM2.5	Exhaust PM2.5	PM2.5 Total	Bio- CO2	NBio- CO2	Total CO2	CH4	N2O	CO2e
Category	tons/yr										MT/yr					
Hauling					0.0000	0.0000	0.0000	0.0000	0.0000	0.0000	0.0000	0.0000	0.0000	0.0000	0.0000	0.0000
Vendor					0.0000	0.0000	0.0000	0.0000	0.0000	0.0000	0.0000	0.0000	0.0000	0.0000	0.0000	0.0000
Worker					0.0000	0.0000	0.0000	0.0000	0.0000	0.0000	0.0000	0.0000	0.0000	0.0000	0.0000	0.0000
Total					**0.0000**	**0.0000**	**0.0000**	**0.0000**	**0.0000**	**0.0000**	**0.0000**	**0.0000**	**0.0000**	**0.0000**	**0.0000**	**0.0000**

Mitigated Construction Off-Site

	ROG	NOx	CO	SO2	Fugitive PM10	Exhaust PM10	PM10 Total	Fugitive PM2.5	Exhaust PM2.5	PM2.5 Total	Bio- CO2	NBio- CO2	Total CO2	CH4	N2O	CO2e
Category	tons/yr										MT/yr					
Hauling					0.0000	0.0000	0.0000	0.0000	0.0000	0.0000	0.0000	0.0000	0.0000	0.0000	0.0000	0.0000
Vendor					0.0000	0.0000	0.0000	0.0000	0.0000	0.0000	0.0000	0.0000	0.0000	0.0000	0.0000	0.0000
Worker					0.0000	0.0000	0.0000	0.0000	0.0000	0.0000	0.0000	0.0000	0.0000	0.0000	0.0000	0.0000
Total					**0.0000**	**0.0000**	**0.0000**	**0.0000**	**0.0000**	**0.0000**	**0.0000**	**0.0000**	**0.0000**	**0.0000**	**0.0000**	**0.0000**

3.62 Year 17 Month 1 - 2036

Unmitigated Construction Off-Site

	ROG	NOx	CO	SO2	Fugitive PM10	Exhaust PM10	PM10 Total	Fugitive PM2.5	Exhaust PM2.5	PM2.5 Total	Bio- CO2	NBio- CO2	Total CO2	CH4	N2O	CO2e
Category	tons/yr										MT/yr					
Hauling					0.0000	0.0000	0.0000	0.0000	0.0000	0.0000	0.0000	0.0000	0.0000	0.0000	0.0000	0.0000
Vendor					0.0000	0.0000	0.0000	0.0000	0.0000	0.0000	0.0000	0.0000	0.0000	0.0000	0.0000	0.0000
Worker					0.0000	0.0000	0.0000	0.0000	0.0000	0.0000	0.0000	0.0000	0.0000	0.0000	0.0000	0.0000
Total					**0.0000**	**0.0000**	**0.0000**	**0.0000**	**0.0000**	**0.0000**	**0.0000**	**0.0000**	**0.0000**	**0.0000**	**0.0000**	**0.0000**

Mitigated Construction Off-Site

	ROG	NOx	CO	SO2	Fugitive PM10	Exhaust PM10	PM10 Total	Fugitive PM2.5	Exhaust PM2.5	PM2.5 Total	Bio- CO2	NBio- CO2	Total CO2	CH4	N2O	CO2e
Category	tons/yr										MT/yr					
Hauling					0.0000	0.0000	0.0000	0.0000	0.0000	0.0000	0.0000	0.0000	0.0000	0.0000	0.0000	0.0000
Vendor					0.0000	0.0000	0.0000	0.0000	0.0000	0.0000	0.0000	0.0000	0.0000	0.0000	0.0000	0.0000
Worker					0.0000	0.0000	0.0000	0.0000	0.0000	0.0000	0.0000	0.0000	0.0000	0.0000	0.0000	0.0000
Total					**0.0000**	**0.0000**	**0.0000**	**0.0000**	**0.0000**	**0.0000**	**0.0000**	**0.0000**	**0.0000**	**0.0000**	**0.0000**	**0.0000**

3.63 Year 17 Month 2 - 2036

Unmitigated Construction Off-Site

	ROG	NOx	CO	SO2	Fugitive PM10	Exhaust PM10	PM10 Total	Fugitive PM2.5	Exhaust PM2.5	PM2.5 Total	Bio- CO2	NBio- CO2	Total CO2	CH4	N2O	CO2e
Category	tons/yr										MT/yr					
Hauling					0.0000	0.0000	0.0000	0.0000	0.0000	0.0000	0.0000	0.0000	0.0000	0.0000	0.0000	0.0000
Vendor					0.0000	0.0000	0.0000	0.0000	0.0000	0.0000	0.0000	0.0000	0.0000	0.0000	0.0000	0.0000
Worker					0.0000	0.0000	0.0000	0.0000	0.0000	0.0000	0.0000	0.0000	0.0000	0.0000	0.0000	0.0000
Total					**0.0000**	**0.0000**	**0.0000**	**0.0000**	**0.0000**	**0.0000**	**0.0000**	**0.0000**	**0.0000**	**0.0000**	**0.0000**	**0.0000**

Mitigated Construction Off-Site

	ROG	NOx	CO	SO2	Fugitive PM10	Exhaust PM10	PM10 Total	Fugitive PM2.5	Exhaust PM2.5	PM2.5 Total	Bio- CO2	NBio- CO2	Total CO2	CH4	N2O	CO2e
Category	tons/yr										MT/yr					
Hauling					0.0000	0.0000	0.0000	0.0000	0.0000	0.0000	0.0000	0.0000	0.0000	0.0000	0.0000	0.0000
Vendor					0.0000	0.0000	0.0000	0.0000	0.0000	0.0000	0.0000	0.0000	0.0000	0.0000	0.0000	0.0000
Worker					0.0000	0.0000	0.0000	0.0000	0.0000	0.0000	0.0000	0.0000	0.0000	0.0000	0.0000	0.0000
Total					**0.0000**	**0.0000**	**0.0000**	**0.0000**	**0.0000**	**0.0000**	**0.0000**	**0.0000**	**0.0000**	**0.0000**	**0.0000**	**0.0000**

3.64 Year 17 Month 3 - 2036

Unmitigated Construction Off-Site

	ROG	NOx	CO	SO2	Fugitive PM10	Exhaust PM10	PM10 Total	Fugitive PM2.5	Exhaust PM2.5	PM2.5 Total	Bio- CO2	NBio- CO2	Total CO2	CH4	N2O	CO2e
Category	tons/yr										MT/yr					
Hauling					0.0000	0.0000	0.0000	0.0000	0.0000	0.0000	0.0000	0.0000	0.0000	0.0000	0.0000	0.0000
Vendor					0.0000	0.0000	0.0000	0.0000	0.0000	0.0000	0.0000	0.0000	0.0000	0.0000	0.0000	0.0000
Worker					0.0000	0.0000	0.0000	0.0000	0.0000	0.0000	0.0000	0.0000	0.0000	0.0000	0.0000	0.0000
Total					**0.0000**	**0.0000**	**0.0000**	**0.0000**	**0.0000**	**0.0000**	**0.0000**	**0.0000**	**0.0000**	**0.0000**	**0.0000**	**0.0000**

Mitigated Construction Off-Site

	ROG	NOx	CO	SO2	Fugitive PM10	Exhaust PM10	PM10 Total	Fugitive PM2.5	Exhaust PM2.5	PM2.5 Total	Bio- CO2	NBio- CO2	Total CO2	CH4	N2O	CO2e
Category	tons/yr										MT/yr					
Hauling					0.0000	0.0000	0.0000	0.0000	0.0000	0.0000	0.0000	0.0000	0.0000	0.0000	0.0000	0.0000
Vendor					0.0000	0.0000	0.0000	0.0000	0.0000	0.0000	0.0000	0.0000	0.0000	0.0000	0.0000	0.0000
Worker					0.0000	0.0000	0.0000	0.0000	0.0000	0.0000	0.0000	0.0000	0.0000	0.0000	0.0000	0.0000
Total					**0.0000**	**0.0000**	**0.0000**	**0.0000**	**0.0000**	**0.0000**	**0.0000**	**0.0000**	**0.0000**	**0.0000**	**0.0000**	**0.0000**

3.65 Year 17 Month 4 - 2036

Unmitigated Construction On-Site

	ROG	NOx	CO	SO2	Fugitive PM10	Exhaust PM10	PM10 Total	Fugitive PM2.5	Exhaust PM2.5	PM2.5 Total	Bio- CO2	NBio- CO2	Total CO2	CH4	N2O	CO2e
Category	tons/yr										MT/yr					
Off-Road	3.8100e-003	8.7000e-003	0.0215	1.1000e-004		3.0000e-004	3.0000e-004		3.0000e-004	3.0000e-004	0.0000	9.6840	9.6840	3.1000e-004	0.0000	9.6905
Total	**3.8100e-003**	**8.7000e-003**	**0.0215**	**1.1000e-004**		**3.0000e-004**	**3.0000e-004**		**3.0000e-004**	**3.0000e-004**	**0.0000**	**9.6840**	**9.6840**	**3.1000e-004**	**0.0000**	**9.6905**

Unmitigated Construction Off-Site

	ROG	NOx	CO	SO2	Fugitive PM10	Exhaust PM10	PM10 Total	Fugitive PM2.5	Exhaust PM2.5	PM2.5 Total	Bio- CO2	NBio- CO2	Total CO2	CH4	N2O	CO2e
Category	tons/yr										MT/yr					
Hauling					0.0000	0.0000	0.0000	0.0000	0.0000	0.0000	0.0000	0.0000	0.0000	0.0000	0.0000	0.0000
Vendor					0.0000	0.0000	0.0000	0.0000	0.0000	0.0000	0.0000	0.0000	0.0000	0.0000	0.0000	0.0000
Worker					0.0000	0.0000	0.0000	0.0000	0.0000	0.0000	0.0000	0.0000	0.0000	0.0000	0.0000	0.0000
Total					**0.0000**	**0.0000**	**0.0000**	**0.0000**	**0.0000**	**0.0000**	**0.0000**	**0.0000**	**0.0000**	**0.0000**	**0.0000**	**0.0000**

3.65 Year 17 Month 4 - 2036

Mitigated Construction On-Site

	ROG	NOx	CO	SO2	Fugitive PM10	Exhaust PM10	PM10 Total	Fugitive PM2.5	Exhaust PM2.5	PM2.5 Total	Bio- CO2	NBio- CO2	Total CO2	CH4	N2O	CO2e
Category	tons/yr										MT/yr					
Off-Road	1.1300e-003	4.8800e-003	0.0413	1.1000e-004		1.5000e-004	1.5000e-004		1.5000e-004	1.5000e-004	0.0000	9.6840	9.6840	3.1000e-004	0.0000	9.6905
Total	**1.1300e-003**	**4.8800e-003**	**0.0413**	**1.1000e-004**		**1.5000e-004**	**1.5000e-004**		**1.5000e-004**	**1.5000e-004**	**0.0000**	**9.6840**	**9.6840**	**3.1000e-004**	**0.0000**	**9.6905**

Mitigated Construction Off-Site

	ROG	NOx	CO	SO2	Fugitive PM10	Exhaust PM10	PM10 Total	Fugitive PM2.5	Exhaust PM2.5	PM2.5 Total	Bio- CO2	NBio- CO2	Total CO2	CH4	N2O	CO2e
Category	tons/yr										MT/yr					
Hauling					0.0000	0.0000	0.0000	0.0000	0.0000	0.0000	0.0000	0.0000	0.0000	0.0000	0.0000	0.0000
Vendor					0.0000	0.0000	0.0000	0.0000	0.0000	0.0000	0.0000	0.0000	0.0000	0.0000	0.0000	0.0000
Worker					0.0000	0.0000	0.0000	0.0000	0.0000	0.0000	0.0000	0.0000	0.0000	0.0000	0.0000	0.0000
Total					**0.0000**	**0.0000**	**0.0000**	**0.0000**	**0.0000**	**0.0000**	**0.0000**	**0.0000**	**0.0000**	**0.0000**	**0.0000**	**0.0000**

3.66 Year 17 Month 5 - 2036

Unmitigated Construction Off-Site

	ROG	NOx	CO	SO2	Fugitive PM10	Exhaust PM10	PM10 Total	Fugitive PM2.5	Exhaust PM2.5	PM2.5 Total	Bio- CO2	NBio- CO2	Total CO2	CH4	N2O	CO2e
Category	tons/yr										MT/yr					
Hauling					0.0000	0.0000	0.0000	0.0000	0.0000	0.0000	0.0000	0.0000	0.0000	0.0000	0.0000	0.0000
Vendor					0.0000	0.0000	0.0000	0.0000	0.0000	0.0000	0.0000	0.0000	0.0000	0.0000	0.0000	0.0000
Worker					0.0000	0.0000	0.0000	0.0000	0.0000	0.0000	0.0000	0.0000	0.0000	0.0000	0.0000	0.0000
Total					**0.0000**	**0.0000**	**0.0000**	**0.0000**	**0.0000**	**0.0000**	**0.0000**	**0.0000**	**0.0000**	**0.0000**	**0.0000**	**0.0000**

Mitigated Construction Off-Site

	ROG	NOx	CO	SO2	Fugitive PM10	Exhaust PM10	PM10 Total	Fugitive PM2.5	Exhaust PM2.5	PM2.5 Total	Bio- CO2	NBio- CO2	Total CO2	CH4	N2O	CO2e
Category	tons/yr										MT/yr					
Hauling					0.0000	0.0000	0.0000	0.0000	0.0000	0.0000	0.0000	0.0000	0.0000	0.0000	0.0000	0.0000
Vendor					0.0000	0.0000	0.0000	0.0000	0.0000	0.0000	0.0000	0.0000	0.0000	0.0000	0.0000	0.0000
Worker					0.0000	0.0000	0.0000	0.0000	0.0000	0.0000	0.0000	0.0000	0.0000	0.0000	0.0000	0.0000
Total					**0.0000**	**0.0000**	**0.0000**	**0.0000**	**0.0000**	**0.0000**	**0.0000**	**0.0000**	**0.0000**	**0.0000**	**0.0000**	**0.0000**

3.67 Year 17 Month 6 - 2036

Unmitigated Construction Off-Site

	ROG	NOx	CO	SO2	Fugitive PM10	Exhaust PM10	PM10 Total	Fugitive PM2.5	Exhaust PM2.5	PM2.5 Total	Bio- CO2	NBio- CO2	Total CO2	CH4	N2O	CO2e
Category	tons/yr										MT/yr					
Hauling					0.0000	0.0000	0.0000	0.0000	0.0000	0.0000	0.0000	0.0000	0.0000	0.0000	0.0000	0.0000
Vendor					0.0000	0.0000	0.0000	0.0000	0.0000	0.0000	0.0000	0.0000	0.0000	0.0000	0.0000	0.0000
Worker					0.0000	0.0000	0.0000	0.0000	0.0000	0.0000	0.0000	0.0000	0.0000	0.0000	0.0000	0.0000
Total					**0.0000**	**0.0000**	**0.0000**	**0.0000**	**0.0000**	**0.0000**	**0.0000**	**0.0000**	**0.0000**	**0.0000**	**0.0000**	**0.0000**

Mitigated Construction Off-Site

	ROG	NOx	CO	SO2	Fugitive PM10	Exhaust PM10	PM10 Total	Fugitive PM2.5	Exhaust PM2.5	PM2.5 Total	Bio- CO2	NBio- CO2	Total CO2	CH4	N2O	CO2e
Category	tons/yr										MT/yr					
Hauling					0.0000	0.0000	0.0000	0.0000	0.0000	0.0000	0.0000	0.0000	0.0000	0.0000	0.0000	0.0000
Vendor					0.0000	0.0000	0.0000	0.0000	0.0000	0.0000	0.0000	0.0000	0.0000	0.0000	0.0000	0.0000
Worker					0.0000	0.0000	0.0000	0.0000	0.0000	0.0000	0.0000	0.0000	0.0000	0.0000	0.0000	0.0000
Total					**0.0000**	**0.0000**	**0.0000**	**0.0000**	**0.0000**	**0.0000**	**0.0000**	**0.0000**	**0.0000**	**0.0000**	**0.0000**	**0.0000**

3.68 Year 17 Month 7 - 2036

Unmitigated Construction Off-Site

	ROG	NOx	CO	SO2	Fugitive PM10	Exhaust PM10	PM10 Total	Fugitive PM2.5	Exhaust PM2.5	PM2.5 Total	Bio- CO2	NBio- CO2	Total CO2	CH4	N2O	CO2e
Category	tons/yr										MT/yr					
Hauling					0.0000	0.0000	0.0000	0.0000	0.0000	0.0000	0.0000	0.0000	0.0000	0.0000	0.0000	0.0000
Vendor					0.0000	0.0000	0.0000	0.0000	0.0000	0.0000	0.0000	0.0000	0.0000	0.0000	0.0000	0.0000
Worker					0.0000	0.0000	0.0000	0.0000	0.0000	0.0000	0.0000	0.0000	0.0000	0.0000	0.0000	0.0000
Total					**0.0000**	**0.0000**	**0.0000**	**0.0000**	**0.0000**	**0.0000**	**0.0000**	**0.0000**	**0.0000**	**0.0000**	**0.0000**	**0.0000**

Mitigated Construction Off-Site

	ROG	NOx	CO	SO2	Fugitive PM10	Exhaust PM10	PM10 Total	Fugitive PM2.5	Exhaust PM2.5	PM2.5 Total	Bio- CO2	NBio- CO2	Total CO2	CH4	N2O	CO2e
Category	tons/yr										MT/yr					
Hauling					0.0000	0.0000	0.0000	0.0000	0.0000	0.0000	0.0000	0.0000	0.0000	0.0000	0.0000	0.0000
Vendor					0.0000	0.0000	0.0000	0.0000	0.0000	0.0000	0.0000	0.0000	0.0000	0.0000	0.0000	0.0000
Worker					0.0000	0.0000	0.0000	0.0000	0.0000	0.0000	0.0000	0.0000	0.0000	0.0000	0.0000	0.0000
Total					**0.0000**	**0.0000**	**0.0000**	**0.0000**	**0.0000**	**0.0000**	**0.0000**	**0.0000**	**0.0000**	**0.0000**	**0.0000**	**0.0000**

3.69 Year 17 Month 8 - 2036

Unmitigated Construction Off-Site

	ROG	NOx	CO	SO2	Fugitive PM10	Exhaust PM10	PM10 Total	Fugitive PM2.5	Exhaust PM2.5	PM2.5 Total	Bio- CO2	NBio- CO2	Total CO2	CH4	N2O	CO2e
Category	tons/yr										MT/yr					
Hauling					0.0000	0.0000	0.0000	0.0000	0.0000	0.0000	0.0000	0.0000	0.0000	0.0000	0.0000	0.0000
Vendor					0.0000	0.0000	0.0000	0.0000	0.0000	0.0000	0.0000	0.0000	0.0000	0.0000	0.0000	0.0000
Worker					0.0000	0.0000	0.0000	0.0000	0.0000	0.0000	0.0000	0.0000	0.0000	0.0000	0.0000	0.0000
Total					**0.0000**	**0.0000**	**0.0000**	**0.0000**	**0.0000**	**0.0000**	**0.0000**	**0.0000**	**0.0000**	**0.0000**	**0.0000**	**0.0000**

Mitigated Construction Off-Site

	ROG	NOx	CO	SO2	Fugitive PM10	Exhaust PM10	PM10 Total	Fugitive PM2.5	Exhaust PM2.5	PM2.5 Total	Bio- CO2	NBio- CO2	Total CO2	CH4	N2O	CO2e
Category	tons/yr										MT/yr					
Hauling					0.0000	0.0000	0.0000	0.0000	0.0000	0.0000	0.0000	0.0000	0.0000	0.0000	0.0000	0.0000
Vendor					0.0000	0.0000	0.0000	0.0000	0.0000	0.0000	0.0000	0.0000	0.0000	0.0000	0.0000	0.0000
Worker					0.0000	0.0000	0.0000	0.0000	0.0000	0.0000	0.0000	0.0000	0.0000	0.0000	0.0000	0.0000
Total					**0.0000**	**0.0000**	**0.0000**	**0.0000**	**0.0000**	**0.0000**	**0.0000**	**0.0000**	**0.0000**	**0.0000**	**0.0000**	**0.0000**

3.70 Year 17 Month 9 - 2036

Unmitigated Construction Off-Site

	ROG	NOx	CO	SO2	Fugitive PM10	Exhaust PM10	PM10 Total	Fugitive PM2.5	Exhaust PM2.5	PM2.5 Total	Bio- CO2	NBio- CO2	Total CO2	CH4	N2O	CO2e
Category	tons/yr										MT/yr					
Hauling					0.0000	0.0000	0.0000	0.0000	0.0000	0.0000	0.0000	0.0000	0.0000	0.0000	0.0000	0.0000
Vendor					0.0000	0.0000	0.0000	0.0000	0.0000	0.0000	0.0000	0.0000	0.0000	0.0000	0.0000	0.0000
Worker					0.0000	0.0000	0.0000	0.0000	0.0000	0.0000	0.0000	0.0000	0.0000	0.0000	0.0000	0.0000
Total					**0.0000**	**0.0000**	**0.0000**	**0.0000**	**0.0000**	**0.0000**	**0.0000**	**0.0000**	**0.0000**	**0.0000**	**0.0000**	**0.0000**

Mitigated Construction Off-Site

	ROG	NOx	CO	SO2	Fugitive PM10	Exhaust PM10	PM10 Total	Fugitive PM2.5	Exhaust PM2.5	PM2.5 Total	Bio- CO2	NBio- CO2	Total CO2	CH4	N2O	CO2e
Category	tons/yr										MT/yr					
Hauling					0.0000	0.0000	0.0000	0.0000	0.0000	0.0000	0.0000	0.0000	0.0000	0.0000	0.0000	0.0000
Vendor					0.0000	0.0000	0.0000	0.0000	0.0000	0.0000	0.0000	0.0000	0.0000	0.0000	0.0000	0.0000
Worker					0.0000	0.0000	0.0000	0.0000	0.0000	0.0000	0.0000	0.0000	0.0000	0.0000	0.0000	0.0000
Total					**0.0000**	**0.0000**	**0.0000**	**0.0000**	**0.0000**	**0.0000**	**0.0000**	**0.0000**	**0.0000**	**0.0000**	**0.0000**	**0.0000**

3.71 Year 17 Month 10 - 2036

Unmitigated Construction Off-Site

	ROG	NOx	CO	SO2	Fugitive PM10	Exhaust PM10	PM10 Total	Fugitive PM2.5	Exhaust PM2.5	PM2.5 Total	Bio- CO2	NBio- CO2	Total CO2	CH4	N2O	CO2e
Category	tons/yr										MT/yr					
Hauling					0.0000	0.0000	0.0000	0.0000	0.0000	0.0000	0.0000	0.0000	0.0000	0.0000	0.0000	0.0000
Vendor					0.0000	0.0000	0.0000	0.0000	0.0000	0.0000	0.0000	0.0000	0.0000	0.0000	0.0000	0.0000
Worker					0.0000	0.0000	0.0000	0.0000	0.0000	0.0000	0.0000	0.0000	0.0000	0.0000	0.0000	0.0000
Total					**0.0000**	**0.0000**	**0.0000**	**0.0000**	**0.0000**	**0.0000**	**0.0000**	**0.0000**	**0.0000**	**0.0000**	**0.0000**	**0.0000**

Mitigated Construction Off-Site

	ROG	NOx	CO	SO2	Fugitive PM10	Exhaust PM10	PM10 Total	Fugitive PM2.5	Exhaust PM2.5	PM2.5 Total	Bio- CO2	NBio- CO2	Total CO2	CH4	N2O	CO2e
Category	tons/yr										MT/yr					
Hauling					0.0000	0.0000	0.0000	0.0000	0.0000	0.0000	0.0000	0.0000	0.0000	0.0000	0.0000	0.0000
Vendor					0.0000	0.0000	0.0000	0.0000	0.0000	0.0000	0.0000	0.0000	0.0000	0.0000	0.0000	0.0000
Worker					0.0000	0.0000	0.0000	0.0000	0.0000	0.0000	0.0000	0.0000	0.0000	0.0000	0.0000	0.0000
Total					**0.0000**	**0.0000**	**0.0000**	**0.0000**	**0.0000**	**0.0000**	**0.0000**	**0.0000**	**0.0000**	**0.0000**	**0.0000**	**0.0000**

3.72 Year 17 Month 11 - 2036

Unmitigated Construction Off-Site

	ROG	NOx	CO	SO2	Fugitive PM10	Exhaust PM10	PM10 Total	Fugitive PM2.5	Exhaust PM2.5	PM2.5 Total	Bio- CO2	NBio- CO2	Total CO2	CH4	N2O	CO2e
Category	tons/yr										MT/yr					
Hauling					0.0000	0.0000	0.0000	0.0000	0.0000	0.0000	0.0000	0.0000	0.0000	0.0000	0.0000	0.0000
Vendor					0.0000	0.0000	0.0000	0.0000	0.0000	0.0000	0.0000	0.0000	0.0000	0.0000	0.0000	0.0000
Worker					0.0000	0.0000	0.0000	0.0000	0.0000	0.0000	0.0000	0.0000	0.0000	0.0000	0.0000	0.0000
Total					**0.0000**	**0.0000**	**0.0000**	**0.0000**	**0.0000**	**0.0000**	**0.0000**	**0.0000**	**0.0000**	**0.0000**	**0.0000**	**0.0000**

Mitigated Construction Off-Site

	ROG	NOx	CO	SO2	Fugitive PM10	Exhaust PM10	PM10 Total	Fugitive PM2.5	Exhaust PM2.5	PM2.5 Total	Bio- CO2	NBio- CO2	Total CO2	CH4	N2O	CO2e
Category	tons/yr										MT/yr					
Hauling					0.0000	0.0000	0.0000	0.0000	0.0000	0.0000	0.0000	0.0000	0.0000	0.0000	0.0000	0.0000
Vendor					0.0000	0.0000	0.0000	0.0000	0.0000	0.0000	0.0000	0.0000	0.0000	0.0000	0.0000	0.0000
Worker					0.0000	0.0000	0.0000	0.0000	0.0000	0.0000	0.0000	0.0000	0.0000	0.0000	0.0000	0.0000
Total					**0.0000**	**0.0000**	**0.0000**	**0.0000**	**0.0000**	**0.0000**	**0.0000**	**0.0000**	**0.0000**	**0.0000**	**0.0000**	**0.0000**

3.73 Year 17 Month 12 - 2036

Unmitigated Construction Off-Site

	ROG	NOx	CO	SO2	Fugitive PM10	Exhaust PM10	PM10 Total	Fugitive PM2.5	Exhaust PM2.5	PM2.5 Total	Bio- CO2	NBio- CO2	Total CO2	CH4	N2O	CO2e
Category	tons/yr										MT/yr					
Hauling					0.0000	0.0000	0.0000	0.0000	0.0000	0.0000	0.0000	0.0000	0.0000	0.0000	0.0000	0.0000
Vendor					0.0000	0.0000	0.0000	0.0000	0.0000	0.0000	0.0000	0.0000	0.0000	0.0000	0.0000	0.0000
Worker					0.0000	0.0000	0.0000	0.0000	0.0000	0.0000	0.0000	0.0000	0.0000	0.0000	0.0000	0.0000
Total					**0.0000**	**0.0000**	**0.0000**	**0.0000**	**0.0000**	**0.0000**	**0.0000**	**0.0000**	**0.0000**	**0.0000**	**0.0000**	**0.0000**

Mitigated Construction Off-Site

	ROG	NOx	CO	SO2	Fugitive PM10	Exhaust PM10	PM10 Total	Fugitive PM2.5	Exhaust PM2.5	PM2.5 Total	Bio- CO2	NBio- CO2	Total CO2	CH4	N2O	CO2e
Category	tons/yr										MT/yr					
Hauling					0.0000	0.0000	0.0000	0.0000	0.0000	0.0000	0.0000	0.0000	0.0000	0.0000	0.0000	0.0000
Vendor					0.0000	0.0000	0.0000	0.0000	0.0000	0.0000	0.0000	0.0000	0.0000	0.0000	0.0000	0.0000
Worker					0.0000	0.0000	0.0000	0.0000	0.0000	0.0000	0.0000	0.0000	0.0000	0.0000	0.0000	0.0000
Total					**0.0000**	**0.0000**	**0.0000**	**0.0000**	**0.0000**	**0.0000**	**0.0000**	**0.0000**	**0.0000**	**0.0000**	**0.0000**	**0.0000**

3.74 Year 18 Month 1 - 2037

Unmitigated Construction Off-Site

	ROG	NOx	CO	SO2	Fugitive PM10	Exhaust PM10	PM10 Total	Fugitive PM2.5	Exhaust PM2.5	PM2.5 Total	Bio- CO2	NBio- CO2	Total CO2	CH4	N2O	CO2e
Category	tons/yr										MT/yr					
Hauling					0.0000	0.0000	0.0000	0.0000	0.0000	0.0000	0.0000	0.0000	0.0000	0.0000	0.0000	0.0000
Vendor					0.0000	0.0000	0.0000	0.0000	0.0000	0.0000	0.0000	0.0000	0.0000	0.0000	0.0000	0.0000
Worker					0.0000	0.0000	0.0000	0.0000	0.0000	0.0000	0.0000	0.0000	0.0000	0.0000	0.0000	0.0000
Total					**0.0000**	**0.0000**	**0.0000**	**0.0000**	**0.0000**	**0.0000**	**0.0000**	**0.0000**	**0.0000**	**0.0000**	**0.0000**	**0.0000**

Mitigated Construction Off-Site

	ROG	NOx	CO	SO2	Fugitive PM10	Exhaust PM10	PM10 Total	Fugitive PM2.5	Exhaust PM2.5	PM2.5 Total	Bio- CO2	NBio- CO2	Total CO2	CH4	N2O	CO2e
Category	tons/yr										MT/yr					
Hauling					0.0000	0.0000	0.0000	0.0000	0.0000	0.0000	0.0000	0.0000	0.0000	0.0000	0.0000	0.0000
Vendor					0.0000	0.0000	0.0000	0.0000	0.0000	0.0000	0.0000	0.0000	0.0000	0.0000	0.0000	0.0000
Worker					0.0000	0.0000	0.0000	0.0000	0.0000	0.0000	0.0000	0.0000	0.0000	0.0000	0.0000	0.0000
Total					**0.0000**	**0.0000**	**0.0000**	**0.0000**	**0.0000**	**0.0000**	**0.0000**	**0.0000**	**0.0000**	**0.0000**	**0.0000**	**0.0000**

3.75 Year 18 Month 2 - 2037

Unmitigated Construction Off-Site

	ROG	NOx	CO	SO2	Fugitive PM10	Exhaust PM10	PM10 Total	Fugitive PM2.5	Exhaust PM2.5	PM2.5 Total	Bio- CO2	NBio- CO2	Total CO2	CH4	N2O	CO2e
Category	tons/yr										MT/yr					
Hauling					0.0000	0.0000	0.0000	0.0000	0.0000	0.0000	0.0000	0.0000	0.0000	0.0000	0.0000	0.0000
Vendor					0.0000	0.0000	0.0000	0.0000	0.0000	0.0000	0.0000	0.0000	0.0000	0.0000	0.0000	0.0000
Worker					0.0000	0.0000	0.0000	0.0000	0.0000	0.0000	0.0000	0.0000	0.0000	0.0000	0.0000	0.0000
Total					**0.0000**	**0.0000**	**0.0000**	**0.0000**	**0.0000**	**0.0000**	**0.0000**	**0.0000**	**0.0000**	**0.0000**	**0.0000**	**0.0000**

Mitigated Construction Off-Site

	ROG	NOx	CO	SO2	Fugitive PM10	Exhaust PM10	PM10 Total	Fugitive PM2.5	Exhaust PM2.5	PM2.5 Total	Bio- CO2	NBio- CO2	Total CO2	CH4	N2O	CO2e
Category	tons/yr										MT/yr					
Hauling					0.0000	0.0000	0.0000	0.0000	0.0000	0.0000	0.0000	0.0000	0.0000	0.0000	0.0000	0.0000
Vendor					0.0000	0.0000	0.0000	0.0000	0.0000	0.0000	0.0000	0.0000	0.0000	0.0000	0.0000	0.0000
Worker					0.0000	0.0000	0.0000	0.0000	0.0000	0.0000	0.0000	0.0000	0.0000	0.0000	0.0000	0.0000
Total					**0.0000**	**0.0000**	**0.0000**	**0.0000**	**0.0000**	**0.0000**	**0.0000**	**0.0000**	**0.0000**	**0.0000**	**0.0000**	**0.0000**

3.76 Year 18 Month 3 - 2037

Unmitigated Construction Off-Site

	ROG	NOx	CO	SO2	Fugitive PM10	Exhaust PM10	PM10 Total	Fugitive PM2.5	Exhaust PM2.5	PM2.5 Total	Bio- CO2	NBio- CO2	Total CO2	CH4	N2O	CO2e
Category	tons/yr										MT/yr					
Hauling					0.0000	0.0000	0.0000	0.0000	0.0000	0.0000	0.0000	0.0000	0.0000	0.0000	0.0000	0.0000
Vendor					0.0000	0.0000	0.0000	0.0000	0.0000	0.0000	0.0000	0.0000	0.0000	0.0000	0.0000	0.0000
Worker					0.0000	0.0000	0.0000	0.0000	0.0000	0.0000	0.0000	0.0000	0.0000	0.0000	0.0000	0.0000
Total					**0.0000**	**0.0000**	**0.0000**	**0.0000**	**0.0000**	**0.0000**	**0.0000**	**0.0000**	**0.0000**	**0.0000**	**0.0000**	**0.0000**

Mitigated Construction Off-Site

	ROG	NOx	CO	SO2	Fugitive PM10	Exhaust PM10	PM10 Total	Fugitive PM2.5	Exhaust PM2.5	PM2.5 Total	Bio- CO2	NBio- CO2	Total CO2	CH4	N2O	CO2e
Category	tons/yr										MT/yr					
Hauling					0.0000	0.0000	0.0000	0.0000	0.0000	0.0000	0.0000	0.0000	0.0000	0.0000	0.0000	0.0000
Vendor					0.0000	0.0000	0.0000	0.0000	0.0000	0.0000	0.0000	0.0000	0.0000	0.0000	0.0000	0.0000
Worker					0.0000	0.0000	0.0000	0.0000	0.0000	0.0000	0.0000	0.0000	0.0000	0.0000	0.0000	0.0000
Total					**0.0000**	**0.0000**	**0.0000**	**0.0000**	**0.0000**	**0.0000**	**0.0000**	**0.0000**	**0.0000**	**0.0000**	**0.0000**	**0.0000**

3.77 Year 18 Month 4 - 2037

Unmitigated Construction On-Site

	ROG	NOx	CO	SO2	Fugitive PM10	Exhaust PM10	PM10 Total	Fugitive PM2.5	Exhaust PM2.5	PM2.5 Total	Bio- CO2	NBio- CO2	Total CO2	CH4	N2O	CO2e
Category	tons/yr										MT/yr					
Off-Road	3.8100e-003	8.7000e-003	0.0215	1.1000e-004		3.0000e-004	3.0000e-004		3.0000e-004	3.0000e-004	0.0000	9.6840	9.6840	3.1000e-004	0.0000	9.6905
Total	**3.8100e-003**	**8.7000e-003**	**0.0215**	**1.1000e-004**		**3.0000e-004**	**3.0000e-004**		**3.0000e-004**	**3.0000e-004**	**0.0000**	**9.6840**	**9.6840**	**3.1000e-004**	**0.0000**	**9.6905**

Unmitigated Construction Off-Site

	ROG	NOx	CO	SO2	Fugitive PM10	Exhaust PM10	PM10 Total	Fugitive PM2.5	Exhaust PM2.5	PM2.5 Total	Bio- CO2	NBio- CO2	Total CO2	CH4	N2O	CO2e
Category	tons/yr										MT/yr					
Hauling					0.0000	0.0000	0.0000	0.0000	0.0000	0.0000	0.0000	0.0000	0.0000	0.0000	0.0000	0.0000
Vendor					0.0000	0.0000	0.0000	0.0000	0.0000	0.0000	0.0000	0.0000	0.0000	0.0000	0.0000	0.0000
Worker					0.0000	0.0000	0.0000	0.0000	0.0000	0.0000	0.0000	0.0000	0.0000	0.0000	0.0000	0.0000
Total					**0.0000**	**0.0000**	**0.0000**	**0.0000**	**0.0000**	**0.0000**	**0.0000**	**0.0000**	**0.0000**	**0.0000**	**0.0000**	**0.0000**

3.77 Year 18 Month 4 - 2037

Mitigated Construction On-Site

	ROG	NOx	CO	SO2	Fugitive PM10	Exhaust PM10	PM10 Total	Fugitive PM2.5	Exhaust PM2.5	PM2.5 Total	Bio- CO2	NBio- CO2	Total CO2	CH4	N2O	CO2e
Category	tons/yr										MT/yr					
Off-Road	1.1300e-003	4.8800e-003	0.0413	1.1000e-004		1.5000e-004	1.5000e-004		1.5000e-004	1.5000e-004	0.0000	9.6840	9.6840	3.1000e-004	0.0000	9.6905
Total	**1.1300e-003**	**4.8800e-003**	**0.0413**	**1.1000e-004**		**1.5000e-004**	**1.5000e-004**		**1.5000e-004**	**1.5000e-004**	**0.0000**	**9.6840**	**9.6840**	**3.1000e-004**	**0.0000**	**9.6905**

Mitigated Construction Off-Site

	ROG	NOx	CO	SO2	Fugitive PM10	Exhaust PM10	PM10 Total	Fugitive PM2.5	Exhaust PM2.5	PM2.5 Total	Bio- CO2	NBio- CO2	Total CO2	CH4	N2O	CO2e
Category	tons/yr										MT/yr					
Hauling					0.0000	0.0000	0.0000	0.0000	0.0000	0.0000	0.0000	0.0000	0.0000	0.0000	0.0000	0.0000
Vendor					0.0000	0.0000	0.0000	0.0000	0.0000	0.0000	0.0000	0.0000	0.0000	0.0000	0.0000	0.0000
Worker					0.0000	0.0000	0.0000	0.0000	0.0000	0.0000	0.0000	0.0000	0.0000	0.0000	0.0000	0.0000
Total					**0.0000**	**0.0000**	**0.0000**	**0.0000**	**0.0000**	**0.0000**	**0.0000**	**0.0000**	**0.0000**	**0.0000**	**0.0000**	**0.0000**

3.78 Year 18 Month 5 - 2037

Unmitigated Construction Off-Site

	ROG	NOx	CO	SO2	Fugitive PM10	Exhaust PM10	PM10 Total	Fugitive PM2.5	Exhaust PM2.5	PM2.5 Total	Bio- CO2	NBio- CO2	Total CO2	CH4	N2O	CO2e
Category	tons/yr										MT/yr					
Hauling					0.0000	0.0000	0.0000	0.0000	0.0000	0.0000	0.0000	0.0000	0.0000	0.0000	0.0000	0.0000
Vendor					0.0000	0.0000	0.0000	0.0000	0.0000	0.0000	0.0000	0.0000	0.0000	0.0000	0.0000	0.0000
Worker					0.0000	0.0000	0.0000	0.0000	0.0000	0.0000	0.0000	0.0000	0.0000	0.0000	0.0000	0.0000
Total					**0.0000**	**0.0000**	**0.0000**	**0.0000**	**0.0000**	**0.0000**	**0.0000**	**0.0000**	**0.0000**	**0.0000**	**0.0000**	**0.0000**

Mitigated Construction Off-Site

	ROG	NOx	CO	SO2	Fugitive PM10	Exhaust PM10	PM10 Total	Fugitive PM2.5	Exhaust PM2.5	PM2.5 Total	Bio- CO2	NBio- CO2	Total CO2	CH4	N2O	CO2e
Category	tons/yr										MT/yr					
Hauling					0.0000	0.0000	0.0000	0.0000	0.0000	0.0000	0.0000	0.0000	0.0000	0.0000	0.0000	0.0000
Vendor					0.0000	0.0000	0.0000	0.0000	0.0000	0.0000	0.0000	0.0000	0.0000	0.0000	0.0000	0.0000
Worker					0.0000	0.0000	0.0000	0.0000	0.0000	0.0000	0.0000	0.0000	0.0000	0.0000	0.0000	0.0000
Total					**0.0000**	**0.0000**	**0.0000**	**0.0000**	**0.0000**	**0.0000**	**0.0000**	**0.0000**	**0.0000**	**0.0000**	**0.0000**	**0.0000**

3.79 Year 18 Month 6 - 2037

Unmitigated Construction Off-Site

	ROG	NOx	CO	SO2	Fugitive PM10	Exhaust PM10	PM10 Total	Fugitive PM2.5	Exhaust PM2.5	PM2.5 Total	Bio- CO2	NBio- CO2	Total CO2	CH4	N2O	CO2e
Category	tons/yr										MT/yr					
Hauling					0.0000	0.0000	0.0000	0.0000	0.0000	0.0000	0.0000	0.0000	0.0000	0.0000	0.0000	0.0000
Vendor					0.0000	0.0000	0.0000	0.0000	0.0000	0.0000	0.0000	0.0000	0.0000	0.0000	0.0000	0.0000
Worker					0.0000	0.0000	0.0000	0.0000	0.0000	0.0000	0.0000	0.0000	0.0000	0.0000	0.0000	0.0000
Total					**0.0000**	**0.0000**	**0.0000**	**0.0000**	**0.0000**	**0.0000**	**0.0000**	**0.0000**	**0.0000**	**0.0000**	**0.0000**	**0.0000**

Mitigated Construction Off-Site

	ROG	NOx	CO	SO2	Fugitive PM10	Exhaust PM10	PM10 Total	Fugitive PM2.5	Exhaust PM2.5	PM2.5 Total	Bio- CO2	NBio- CO2	Total CO2	CH4	N2O	CO2e
Category	tons/yr										MT/yr					
Hauling					0.0000	0.0000	0.0000	0.0000	0.0000	0.0000	0.0000	0.0000	0.0000	0.0000	0.0000	0.0000
Vendor					0.0000	0.0000	0.0000	0.0000	0.0000	0.0000	0.0000	0.0000	0.0000	0.0000	0.0000	0.0000
Worker					0.0000	0.0000	0.0000	0.0000	0.0000	0.0000	0.0000	0.0000	0.0000	0.0000	0.0000	0.0000
Total					**0.0000**	**0.0000**	**0.0000**	**0.0000**	**0.0000**	**0.0000**	**0.0000**	**0.0000**	**0.0000**	**0.0000**	**0.0000**	**0.0000**

3.80 Year 18 Month 7 - 2037

Unmitigated Construction Off-Site

	ROG	NOx	CO	SO2	Fugitive PM10	Exhaust PM10	PM10 Total	Fugitive PM2.5	Exhaust PM2.5	PM2.5 Total	Bio- CO2	NBio- CO2	Total CO2	CH4	N2O	CO2e
Category	tons/yr										MT/yr					
Hauling					0.0000	0.0000	0.0000	0.0000	0.0000	0.0000	0.0000	0.0000	0.0000	0.0000	0.0000	0.0000
Vendor					0.0000	0.0000	0.0000	0.0000	0.0000	0.0000	0.0000	0.0000	0.0000	0.0000	0.0000	0.0000
Worker					0.0000	0.0000	0.0000	0.0000	0.0000	0.0000	0.0000	0.0000	0.0000	0.0000	0.0000	0.0000
Total					**0.0000**	**0.0000**	**0.0000**	**0.0000**	**0.0000**	**0.0000**	**0.0000**	**0.0000**	**0.0000**	**0.0000**	**0.0000**	**0.0000**

Mitigated Construction Off-Site

	ROG	NOx	CO	SO2	Fugitive PM10	Exhaust PM10	PM10 Total	Fugitive PM2.5	Exhaust PM2.5	PM2.5 Total	Bio- CO2	NBio- CO2	Total CO2	CH4	N2O	CO2e
Category	tons/yr										MT/yr					
Hauling					0.0000	0.0000	0.0000	0.0000	0.0000	0.0000	0.0000	0.0000	0.0000	0.0000	0.0000	0.0000
Vendor					0.0000	0.0000	0.0000	0.0000	0.0000	0.0000	0.0000	0.0000	0.0000	0.0000	0.0000	0.0000
Worker					0.0000	0.0000	0.0000	0.0000	0.0000	0.0000	0.0000	0.0000	0.0000	0.0000	0.0000	0.0000
Total					**0.0000**	**0.0000**	**0.0000**	**0.0000**	**0.0000**	**0.0000**	**0.0000**	**0.0000**	**0.0000**	**0.0000**	**0.0000**	**0.0000**

3.81 Year 18 Month 8 - 2037

Unmitigated Construction Off-Site

	ROG	NOx	CO	SO2	Fugitive PM10	Exhaust PM10	PM10 Total	Fugitive PM2.5	Exhaust PM2.5	PM2.5 Total	Bio- CO2	NBio- CO2	Total CO2	CH4	N2O	CO2e
Category	tons/yr										MT/yr					
Hauling					0.0000	0.0000	0.0000	0.0000	0.0000	0.0000	0.0000	0.0000	0.0000	0.0000	0.0000	0.0000
Vendor					0.0000	0.0000	0.0000	0.0000	0.0000	0.0000	0.0000	0.0000	0.0000	0.0000	0.0000	0.0000
Worker					0.0000	0.0000	0.0000	0.0000	0.0000	0.0000	0.0000	0.0000	0.0000	0.0000	0.0000	0.0000
Total					**0.0000**	**0.0000**	**0.0000**	**0.0000**	**0.0000**	**0.0000**	**0.0000**	**0.0000**	**0.0000**	**0.0000**	**0.0000**	**0.0000**

Mitigated Construction Off-Site

	ROG	NOx	CO	SO2	Fugitive PM10	Exhaust PM10	PM10 Total	Fugitive PM2.5	Exhaust PM2.5	PM2.5 Total	Bio- CO2	NBio- CO2	Total CO2	CH4	N2O	CO2e
Category	tons/yr										MT/yr					
Hauling					0.0000	0.0000	0.0000	0.0000	0.0000	0.0000	0.0000	0.0000	0.0000	0.0000	0.0000	0.0000
Vendor					0.0000	0.0000	0.0000	0.0000	0.0000	0.0000	0.0000	0.0000	0.0000	0.0000	0.0000	0.0000
Worker					0.0000	0.0000	0.0000	0.0000	0.0000	0.0000	0.0000	0.0000	0.0000	0.0000	0.0000	0.0000
Total					**0.0000**	**0.0000**	**0.0000**	**0.0000**	**0.0000**	**0.0000**	**0.0000**	**0.0000**	**0.0000**	**0.0000**	**0.0000**	**0.0000**

3.82 Year 18 Month 9 - 2037

Unmitigated Construction Off-Site

	ROG	NOx	CO	SO2	Fugitive PM10	Exhaust PM10	PM10 Total	Fugitive PM2.5	Exhaust PM2.5	PM2.5 Total	Bio- CO2	NBio- CO2	Total CO2	CH4	N2O	CO2e
Category	tons/yr										MT/yr					
Hauling					0.0000	0.0000	0.0000	0.0000	0.0000	0.0000	0.0000	0.0000	0.0000	0.0000	0.0000	0.0000
Vendor					0.0000	0.0000	0.0000	0.0000	0.0000	0.0000	0.0000	0.0000	0.0000	0.0000	0.0000	0.0000
Worker					0.0000	0.0000	0.0000	0.0000	0.0000	0.0000	0.0000	0.0000	0.0000	0.0000	0.0000	0.0000
Total					**0.0000**	**0.0000**	**0.0000**	**0.0000**	**0.0000**	**0.0000**	**0.0000**	**0.0000**	**0.0000**	**0.0000**	**0.0000**	**0.0000**

Mitigated Construction Off-Site

	ROG	NOx	CO	SO2	Fugitive PM10	Exhaust PM10	PM10 Total	Fugitive PM2.5	Exhaust PM2.5	PM2.5 Total	Bio- CO2	NBio- CO2	Total CO2	CH4	N2O	CO2e
Category	tons/yr										MT/yr					
Hauling					0.0000	0.0000	0.0000	0.0000	0.0000	0.0000	0.0000	0.0000	0.0000	0.0000	0.0000	0.0000
Vendor					0.0000	0.0000	0.0000	0.0000	0.0000	0.0000	0.0000	0.0000	0.0000	0.0000	0.0000	0.0000
Worker					0.0000	0.0000	0.0000	0.0000	0.0000	0.0000	0.0000	0.0000	0.0000	0.0000	0.0000	0.0000
Total					**0.0000**	**0.0000**	**0.0000**	**0.0000**	**0.0000**	**0.0000**	**0.0000**	**0.0000**	**0.0000**	**0.0000**	**0.0000**	**0.0000**

3.83 Year 18 Month 10 - 2037

Unmitigated Construction Off-Site

	ROG	NOx	CO	SO2	Fugitive PM10	Exhaust PM10	PM10 Total	Fugitive PM2.5	Exhaust PM2.5	PM2.5 Total	Bio- CO2	NBio- CO2	Total CO2	CH4	N2O	CO2e
Category	tons/yr										MT/yr					
Hauling					0.0000	0.0000	0.0000	0.0000	0.0000	0.0000	0.0000	0.0000	0.0000	0.0000	0.0000	0.0000
Vendor					0.0000	0.0000	0.0000	0.0000	0.0000	0.0000	0.0000	0.0000	0.0000	0.0000	0.0000	0.0000
Worker					0.0000	0.0000	0.0000	0.0000	0.0000	0.0000	0.0000	0.0000	0.0000	0.0000	0.0000	0.0000
Total					**0.0000**	**0.0000**	**0.0000**	**0.0000**	**0.0000**	**0.0000**	**0.0000**	**0.0000**	**0.0000**	**0.0000**	**0.0000**	**0.0000**

Mitigated Construction Off-Site

	ROG	NOx	CO	SO2	Fugitive PM10	Exhaust PM10	PM10 Total	Fugitive PM2.5	Exhaust PM2.5	PM2.5 Total	Bio- CO2	NBio- CO2	Total CO2	CH4	N2O	CO2e
Category	tons/yr										MT/yr					
Hauling					0.0000	0.0000	0.0000	0.0000	0.0000	0.0000	0.0000	0.0000	0.0000	0.0000	0.0000	0.0000
Vendor					0.0000	0.0000	0.0000	0.0000	0.0000	0.0000	0.0000	0.0000	0.0000	0.0000	0.0000	0.0000
Worker					0.0000	0.0000	0.0000	0.0000	0.0000	0.0000	0.0000	0.0000	0.0000	0.0000	0.0000	0.0000
Total					**0.0000**	**0.0000**	**0.0000**	**0.0000**	**0.0000**	**0.0000**	**0.0000**	**0.0000**	**0.0000**	**0.0000**	**0.0000**	**0.0000**

3.84 Year 18 Month 11 - 2037

Unmitigated Construction Off-Site

	ROG	NOx	CO	SO2	Fugitive PM10	Exhaust PM10	PM10 Total	Fugitive PM2.5	Exhaust PM2.5	PM2.5 Total	Bio- CO2	NBio- CO2	Total CO2	CH4	N2O	CO2e
Category	tons/yr										MT/yr					
Hauling					0.0000	0.0000	0.0000	0.0000	0.0000	0.0000	0.0000	0.0000	0.0000	0.0000	0.0000	0.0000
Vendor					0.0000	0.0000	0.0000	0.0000	0.0000	0.0000	0.0000	0.0000	0.0000	0.0000	0.0000	0.0000
Worker					0.0000	0.0000	0.0000	0.0000	0.0000	0.0000	0.0000	0.0000	0.0000	0.0000	0.0000	0.0000
Total					**0.0000**	**0.0000**	**0.0000**	**0.0000**	**0.0000**	**0.0000**	**0.0000**	**0.0000**	**0.0000**	**0.0000**	**0.0000**	**0.0000**

Mitigated Construction Off-Site

	ROG	NOx	CO	SO2	Fugitive PM10	Exhaust PM10	PM10 Total	Fugitive PM2.5	Exhaust PM2.5	PM2.5 Total	Bio- CO2	NBio- CO2	Total CO2	CH4	N2O	CO2e
Category	tons/yr										MT/yr					
Hauling					0.0000	0.0000	0.0000	0.0000	0.0000	0.0000	0.0000	0.0000	0.0000	0.0000	0.0000	0.0000
Vendor					0.0000	0.0000	0.0000	0.0000	0.0000	0.0000	0.0000	0.0000	0.0000	0.0000	0.0000	0.0000
Worker					0.0000	0.0000	0.0000	0.0000	0.0000	0.0000	0.0000	0.0000	0.0000	0.0000	0.0000	0.0000
Total					**0.0000**	**0.0000**	**0.0000**	**0.0000**	**0.0000**	**0.0000**	**0.0000**	**0.0000**	**0.0000**	**0.0000**	**0.0000**	**0.0000**

3.85 Year 18 Month 12 - 2037

Unmitigated Construction Off-Site

	ROG	NOx	CO	SO2	Fugitive PM10	Exhaust PM10	PM10 Total	Fugitive PM2.5	Exhaust PM2.5	PM2.5 Total	Bio- CO2	NBio- CO2	Total CO2	CH4	N2O	CO2e
Category	tons/yr										MT/yr					
Hauling					0.0000	0.0000	0.0000	0.0000	0.0000	0.0000	0.0000	0.0000	0.0000	0.0000	0.0000	0.0000
Vendor					0.0000	0.0000	0.0000	0.0000	0.0000	0.0000	0.0000	0.0000	0.0000	0.0000	0.0000	0.0000
Worker					0.0000	0.0000	0.0000	0.0000	0.0000	0.0000	0.0000	0.0000	0.0000	0.0000	0.0000	0.0000
Total					**0.0000**	**0.0000**	**0.0000**	**0.0000**	**0.0000**	**0.0000**	**0.0000**	**0.0000**	**0.0000**	**0.0000**	**0.0000**	**0.0000**

Mitigated Construction Off-Site

	ROG	NOx	CO	SO2	Fugitive PM10	Exhaust PM10	PM10 Total	Fugitive PM2.5	Exhaust PM2.5	PM2.5 Total	Bio- CO2	NBio- CO2	Total CO2	CH4	N2O	CO2e
Category	tons/yr										MT/yr					
Hauling					0.0000	0.0000	0.0000	0.0000	0.0000	0.0000	0.0000	0.0000	0.0000	0.0000	0.0000	0.0000
Vendor					0.0000	0.0000	0.0000	0.0000	0.0000	0.0000	0.0000	0.0000	0.0000	0.0000	0.0000	0.0000
Worker					0.0000	0.0000	0.0000	0.0000	0.0000	0.0000	0.0000	0.0000	0.0000	0.0000	0.0000	0.0000
Total					**0.0000**	**0.0000**	**0.0000**	**0.0000**	**0.0000**	**0.0000**	**0.0000**	**0.0000**	**0.0000**	**0.0000**	**0.0000**	**0.0000**

4.0 Operational Detail - Mobile

AERA - Santa Barbara - Cat Canyon Substation Construction Equipment

Santa Barbara-North of Santa Ynez County, Annual

1.0 Project Characteristics

1.1 Land Usage

Land Uses	Size	Metric	Lot Acreage	Floor Surface Area	Population
User Defined Industrial	2,100.00	User Defined Unit	2,100.00	0.00	0

1.2 Other Project Characteristics

Urbanization	Rural	**Wind Speed (m/s)**	3.1	**Precipitation Freq (Days)**	37
Climate Zone	4			**Operational Year**	2035
Utility Company	Pacific Gas & Electric Company				
CO2 Intensity (lb/MWhr)	641.35	**CH4 Intensity (lb/MWhr)**	0.029	**N2O Intensity (lb/MWhr)**	0.006

1.3 User Entered Comments & Non-Default Data

Project Characteristics -

Land Use - The project will be located in the East Cat Canyon oil field on approximately 2,100 acres.

Construction Phase - Anticipated Construction Schedule Provided by the Project Applicant.

Off-road Equipment - Units and Hours/day provided by Project Applicant. HP were adjusted whenever data was available for the size of the equipment provided by the applicant.

Off-road Equipment - Units and Hours/day provided by Project Applicant. HP were adjusted whenever data was available for the size of the equipment provided by the applicant.

Off-road Equipment - Units and Hours/day provided by Project Applicant. HP were adjusted whenever data was available for the size of the equipment provided by the applicant.

Off-road Equipment - Units and Hours/day provided by Project Applicant. HP were adjusted whenever data was available for the size of the equipment provided by the applicant.

Trips and VMT - Employee Trips are included in the offsite calculations.

On-road Fugitive Dust -

Vehicle Trips - Construction Run Only

Vechicle Emission Factors -

Vechicle Emission Factors -

Vechicle Emission Factors -

Road Dust -

Consumer Products - Construction Run Only

Area Coating -

Landscape Equipment - Construction Run Only

Construction Off-road Equipment Mitigation - Using Tier 4 Final Engines to Mitigate Construction Emissions

Table Name	Column Name	Default Value	New Value
tblAreaCoating	ReapplicationRatePercent	10	0
tblConstEquipMitigation	NumberOfEquipmentMitigated	0.00	3.00
tblConstEquipMitigation	NumberOfEquipmentMitigated	0.00	3.00
tblConstEquipMitigation	NumberOfEquipmentMitigated	0.00	1.00
tblConstEquipMitigation	NumberOfEquipmentMitigated	0.00	1.00
tblConstEquipMitigation	NumberOfEquipmentMitigated	0.00	1.00

tblConstEquipMitigation	NumberOfEquipmentMitigated	0.00	1.00
tblConstEquipMitigation	NumberOfEquipmentMitigated	0.00	2.00
tblConstEquipMitigation	NumberOfEquipmentMitigated	0.00	7.00
tblConstEquipMitigation	NumberOfEquipmentMitigated	0.00	7.00
tblConstEquipMitigation	NumberOfEquipmentMitigated	0.00	1.00
tblConstEquipMitigation	NumberOfEquipmentMitigated	0.00	2.00
tblConstEquipMitigation	NumberOfEquipmentMitigated	0.00	2.00
tblConstEquipMitigation	NumberOfEquipmentMitigated	0.00	1.00
tblConstEquipMitigation	Tier	No Change	Tier 4 Final
tblConstEquipMitigation	Tier	No Change	Tier 4 Final
tblConstEquipMitigation	Tier	No Change	Tier 4 Final
tblConstEquipMitigation	Tier	No Change	Tier 4 Final
tblConstEquipMitigation	Tier	No Change	Tier 4 Final
tblConstEquipMitigation	Tier	No Change	Tier 4 Final
tblConstEquipMitigation	Tier	No Change	Tier 4 Final
tblConstEquipMitigation	Tier	No Change	Tier 4 Final
tblConstEquipMitigation	Tier	No Change	Tier 4 Final
tblConstEquipMitigation	Tier	No Change	Tier 4 Final
tblConstEquipMitigation	Tier	No Change	Tier 4 Final
tblConstEquipMitigation	Tier	No Change	Tier 4 Final
tblConstEquipMitigation	Tier	No Change	Tier 4 Final
tblConstructionPhase	NumDays	155,000.00	25.00
tblConstructionPhase	NumDays	155,000.00	27.00
tblConstructionPhase	NumDays	155,000.00	26.00
tblConstructionPhase	NumDays	155,000.00	26.00
tblConstructionPhase	NumDaysWeek	5.00	6.00
tblConstructionPhase	NumDaysWeek	5.00	6.00
tblConstructionPhase	NumDaysWeek	5.00	6.00

tblConstructionPhase	NumDaysWeek	5.00	6.00
tblConstructionPhase	PhaseStartDate	4/30/2017	5/1/2017
tblLandUse	LotAcreage	0.00	2,100.00
tblOffRoadEquipment	HorsePower	226.00	400.00
tblOffRoadEquipment	HorsePower	89.00	73.00
tblOffRoadEquipment	HorsePower	89.00	73.00
tblOffRoadEquipment	HorsePower	84.00	11.00
tblOffRoadEquipment	HorsePower	84.00	11.00
tblOffRoadEquipment	HorsePower	84.00	11.00
tblOffRoadEquipment	HorsePower	84.00	11.00
tblOffRoadEquipment	HorsePower	97.00	92.00
tblOffRoadEquipment	HorsePower	97.00	92.00
tblOffRoadEquipment	HorsePower	62.00	60.00
tblOffRoadEquipment	HorsePower	62.00	60.00
tblOffRoadEquipment	HorsePower	62.00	60.00
tblOffRoadEquipment	HorsePower	78.00	50.00
tblOffRoadEquipment	HorsePower	78.00	50.00
tblOffRoadEquipment	HorsePower	78.00	50.00
tblOffRoadEquipment	HorsePower	205.00	68.00
tblOffRoadEquipment	HorsePower	9.00	7.00
tblOffRoadEquipment	HorsePower	81.00	6.00
tblOffRoadEquipment	HorsePower	171.00	130.00
tblOffRoadEquipment	HorsePower	171.00	130.00
tblOffRoadEquipment	HorsePower	171.00	180.00
tblOffRoadEquipment	HorsePower	171.00	180.00
tblOffRoadEquipment	HorsePower	171.00	180.00
tblOffRoadEquipment	HorsePower	64.00	45.00
tblOffRoadEquipment	HorsePower	64.00	45.00

tblOffRoadEquipment	OffRoadEquipmentUnitAmount	3.00	1.00
tblOffRoadEquipment	OffRoadEquipmentUnitAmount	3.00	1.00
tblOffRoadEquipment	OffRoadEquipmentUnitAmount	1.00	2.00
tblOffRoadEquipment	OffRoadEquipmentUnitAmount	1.00	2.00
tblOffRoadEquipment	OffRoadEquipmentUnitAmount	1.00	2.00
tblOffRoadEquipment	OffRoadEquipmentUnitAmount	3.00	1.00
tblOffRoadEquipment	OffRoadEquipmentUnitAmount	3.00	1.00
tblOffRoadEquipment	OffRoadEquipmentUnitAmount	0.00	1.00
tblOffRoadEquipment	OffRoadEquipmentUnitAmount	0.00	1.00
tblOffRoadEquipment	OffRoadEquipmentUnitAmount	0.00	1.00
tblOffRoadEquipment	OffRoadEquipmentUnitAmount	0.00	1.00
tblOffRoadEquipment	OffRoadEquipmentUnitAmount	0.00	2.00
tblOffRoadEquipment	OffRoadEquipmentUnitAmount	0.00	1.00
tblOffRoadEquipment	OffRoadEquipmentUnitAmount	0.00	1.00
tblOffRoadEquipment	PhaseName		Year -3 Month 4
tblOffRoadEquipment	PhaseName		Year -3 Month 4
tblOffRoadEquipment	PhaseName		Year -3 Month 4
tblOffRoadEquipment	PhaseName		Year -3 Month 4
tblOffRoadEquipment	PhaseName		Year -3 Month 4
tblOffRoadEquipment	PhaseName		Year -3 Month 4
tblOffRoadEquipment	PhaseName		Year -3 Month 4
tblOffRoadEquipment	UsageHours	7.00	3.00
tblOffRoadEquipment	UsageHours	8.00	10.00
tblOffRoadEquipment	UsageHours	8.00	10.00
tblOffRoadEquipment	UsageHours	8.00	10.00
tblOffRoadEquipment	UsageHours	8.00	10.00
tblOffRoadEquipment	UsageHours	8.00	10.00
tblOffRoadEquipment	UsageHours	8.00	10.00

tblOffRoadEquipment	UsageHours	7.00	10.00
tblOffRoadEquipment	UsageHours	7.00	10.00
tblProjectCharacteristics	OperationalYear	2014	2035
tblProjectCharacteristics	UrbanizationLevel	Urban	Rural

2.0 Emissions Summary

2.1 Overall Construction

Unmitigated Construction

	ROG	NOx	CO	SO2	Fugitive PM10	Exhaust PM10	PM10 Total	Fugitive PM2.5	Exhaust PM2.5	PM2.5 Total	Bio- CO2	NBio- CO2	Total CO2	CH4	N2O	CO2e
Year	tons/yr										MT/yr					
2017	0.1056	0.8322	0.6275	9.1000e-004	0.0000	0.0497	0.0497	0.0000	0.0467	0.0467	0.0000	77.6891	77.6891	0.0212	0.0000	78.1349
Total	**0.1056**	**0.8322**	**0.6275**	**9.1000e-004**	**0.0000**	**0.0497**	**0.0497**	**0.0000**	**0.0467**	**0.0467**	**0.0000**	**77.6891**	**77.6891**	**0.0212**	**0.0000**	**78.1349**

Mitigated Construction

	ROG	NOx	CO	SO2	Fugitive PM10	Exhaust PM10	PM10 Total	Fugitive PM2.5	Exhaust PM2.5	PM2.5 Total	Bio- CO2	NBio- CO2	Total CO2	CH4	N2O	CO2e
Year	tons/yr										MT/yr					
2017	0.0118	0.1613	0.5349	9.1000e-004	0.0000	1.1800e-003	1.1800e-003	0.0000	1.1800e-003	1.1800e-003	0.0000	77.6891	77.6891	0.0212	0.0000	78.1348
Total	**0.0118**	**0.1613**	**0.5349**	**9.1000e-004**	**0.0000**	**1.1800e-003**	**1.1800e-003**	**0.0000**	**1.1800e-003**	**1.1800e-003**	**0.0000**	**77.6891**	**77.6891**	**0.0212**	**0.0000**	**78.1348**

	ROG	**NOx**	**CO**	**SO2**	**Fugitive PM10**	**Exhaust PM10**	**PM10 Total**	**Fugitive PM2.5**	**Exhaust PM2.5**	**PM2.5 Total**	**Bio- CO2**	**NBio-CO2**	**Total CO2**	**CH4**	**N20**	**CO2e**
Percent Reduction	**88.80**	**80.61**	**14.76**	**0.00**	**0.00**	**97.63**	**97.63**	**0.00**	**97.47**	**97.47**	**0.00**	**0.00**	**0.00**	**0.00**	**0.00**	**0.00**

2.2 Overall Operational

Unmitigated Operational

	ROG	NOx	CO	SO2	Fugitive PM10	Exhaust PM10	PM10 Total	Fugitive PM2.5	Exhaust PM2.5	PM2.5 Total	Bio- CO2	NBio- CO2	Total CO2	CH4	N2O	CO2e
Category	tons/yr										MT/yr					
Area	0.0000					0.0000	0.0000		0.0000	0.0000	0.0000	0.0000	0.0000	0.0000	0.0000	0.0000
Energy	0.0000	0.0000	0.0000	0.0000		0.0000	0.0000		0.0000	0.0000	0.0000	0.0000	0.0000	0.0000	0.0000	0.0000
Mobile	0.0000	0.0000	0.0000	0.0000	0.0000	0.0000	0.0000	0.0000	0.0000	0.0000	0.0000	0.0000	0.0000	0.0000	0.0000	0.0000
Waste						0.0000	0.0000		0.0000	0.0000	0.0000	0.0000	0.0000	0.0000	0.0000	0.0000
Water						0.0000	0.0000		0.0000	0.0000	0.0000	0.0000	0.0000	0.0000	0.0000	0.0000
Total	**0.0000**	**0.0000**	**0.0000**	**0.0000**	**0.0000**	**0.0000**	**0.0000**	**0.0000**	**0.0000**	**0.0000**	**0.0000**	**0.0000**	**0.0000**	**0.0000**	**0.0000**	**0.0000**

2.2 Overall Operational

Mitigated Operational

	ROG	NOx	CO	SO2	Fugitive PM10	Exhaust PM10	PM10 Total	Fugitive PM2.5	Exhaust PM2.5	PM2.5 Total	Bio- CO2	NBio- CO2	Total CO2	CH4	N2O	CO2e
Category	tons/yr										MT/yr					
Area	0.0000					0.0000	0.0000		0.0000	0.0000	0.0000	0.0000	0.0000	0.0000	0.0000	0.0000
Energy	0.0000	0.0000	0.0000	0.0000		0.0000	0.0000		0.0000	0.0000	0.0000	0.0000	0.0000	0.0000	0.0000	0.0000
Mobile	0.0000	0.0000	0.0000	0.0000	0.0000	0.0000	0.0000	0.0000	0.0000	0.0000	0.0000	0.0000	0.0000	0.0000	0.0000	0.0000
Waste						0.0000	0.0000		0.0000	0.0000	0.0000	0.0000	0.0000	0.0000	0.0000	0.0000
Water						0.0000	0.0000		0.0000	0.0000	0.0000	0.0000	0.0000	0.0000	0.0000	0.0000
Total	**0.0000**	**0.0000**	**0.0000**	**0.0000**	**0.0000**	**0.0000**	**0.0000**	**0.0000**	**0.0000**	**0.0000**	**0.0000**	**0.0000**	**0.0000**	**0.0000**	**0.0000**	**0.0000**

	ROG	**NOx**	**CO**	**SO2**	**Fugitive PM10**	**Exhaust PM10**	**PM10 Total**	**Fugitive PM2.5**	**Exhaust PM2.5**	**PM2.5 Total**	**Bio- CO2**	**NBio-CO2**	**Total CO2**	**CH4**	**N20**	**CO2e**
Percent Reduction	**0.00**	**0.00**	**0.00**	**0.00**	**0.00**	**0.00**	**0.00**	**0.00**	**0.00**	**0.00**	**0.00**	**0.00**	**0.00**	**0.00**	**0.00**	**0.00**

3.0 Construction Detail

Construction Phase

Phase Number	Phase Name	Phase Type	Start Date	End Date	Num Days Week	Num Days	Phase Description
1	Year -3 Month 4	Building Construction	4/1/2017	4/29/2017	6	25	
2	Year -3 Month 5	Building Construction	5/1/2017	5/31/2017	6	27	
3	Year -3 Month 6	Building Construction	6/1/2017	6/30/2017	6	26	
4	Year -3 Month 7	Building Construction	7/1/2017	7/31/2017	6	26	

Acres of Grading (Site Preparation Phase): 0

Acres of Grading (Grading Phase): 0

Acres of Paving: 0

Residential Indoor: 0; Residential Outdoor: 0; Non-Residential Indoor: 0; Non-Residential Outdoor: 0 (Architectural Coating – sqft)

OffRoad Equipment

Phase Name	Offroad Equipment Type	Amount	Usage Hours	Horse Power	Load Factor
Year -3 Month 4	Air Compressors	1	10.00	50	0.48
Year -3 Month 4	Bore/Drill Rigs	1	2.00	68	0.50
Year -3 Month 4	Cement and Mortar Mixers	1	10.00	7	0.56
Year -3 Month 4	Concrete/Industrial Saws	1	10.00	6	0.73
Year -3 Month 4	Forklifts	1	10.00	73	0.20
Year -3 Month 4	Generator Sets	2	10.00	11	0.74
Year -3 Month 4	Other Construction Equipment	2	10.00	130	0.42
Year -3 Month 4	Plate Compactors	1	5.00	8	0.43
Year -3 Month 4	Skid Steer Loaders	1	10.00	45	0.37
Year -3 Month 4	Tractors/Loaders/Backhoes	1	10.00	92	0.37
Year -3 Month 5	Aerial Lifts	1	3.00	60	0.31
Year -3 Month 5	Air Compressors	1	10.00	50	0.48
Year -3 Month 5	Forklifts	1	10.00	73	0.20
Year -3 Month 5	Generator Sets	2	10.00	11	0.74
Year -3 Month 5	Other Construction Equipment	2	10.00	130	0.42
Year -3 Month 5	Other Construction Equipment	1	10.00	180	0.42
Year -3 Month 5	Skid Steer Loaders	1	10.00	45	0.37
Year -3 Month 5	Tractors/Loaders/Backhoes	1	10.00	92	0.37
Year -3 Month 5	Trenchers	1	5.00	80	0.50
Year -3 Month 6	Aerial Lifts	1	8.00	60	0.31
Year -3 Month 6	Air Compressors	1	10.00	50	0.48
Year -3 Month 6	Cranes	1	3.00	400	0.29
Year -3 Month 6	Generator Sets	2	10.00	11	0.74
Year -3 Month 6	Other Construction Equipment	1	10.00	180	0.42
Year -3 Month 7	Aerial Lifts	1	6.00	60	0.31
Year -3 Month 7	Generator Sets	1	10.00	11	0.74
Year -3 Month 7	Other Construction Equipment	1	10.00	180	0.42

Trips and VMT

Phase Name	Offroad Equipment Count	Worker Trip Number	Vendor Trip Number	Hauling Trip Number	Worker Trip Length	Vendor Trip Length	Hauling Trip Length	Worker Vehicle Class	Vendor Vehicle Class	Hauling Vehicle Class
Year -3 Month 4	12	0.00	0.00	0.00	12.30	4.60	20.00	LD_Mix	HDT_Mix	HHDT
Year -3 Month 5	11	0.00	0.00	0.00	12.30	4.60	20.00	LD_Mix	HDT_Mix	HHDT
Year -3 Month 6	6	0.00	0.00	0.00	12.30	4.60	20.00	LD_Mix	HDT_Mix	HHDT
Year -3 Month 7	3	0.00	0.00	0.00	12.30	4.60	20.00	LD_Mix	HDT_Mix	HHDT

3.1 Mitigation Measures Construction

Use Cleaner Engines for Construction Equipment

Clean Paved Roads

3.2 Year -3 Month 4 - 2017

Unmitigated Construction On-Site

	ROG	NOx	CO	SO2	Fugitive PM10	Exhaust PM10	PM10 Total	Fugitive PM2.5	Exhaust PM2.5	PM2.5 Total	Bio- CO2	NBio- CO2	Total CO2	CH4	N2O	CO2e
Category	tons/yr										MT/yr					
Off-Road	0.0396	0.3200	0.2348	3.4000e-004		0.0193	0.0193		0.0181	0.0181	0.0000	29.3008	29.3008	8.1200e-003	0.0000	29.4713
Total	**0.0396**	**0.3200**	**0.2348**	**3.4000e-004**		**0.0193**	**0.0193**		**0.0181**	**0.0181**	**0.0000**	**29.3008**	**29.3008**	**8.1200e-003**	**0.0000**	**29.4713**

3.2 Year -3 Month 4 - 2017

Unmitigated Construction Off-Site

	ROG	NOx	CO	SO2	Fugitive PM10	Exhaust PM10	PM10 Total	Fugitive PM2.5	Exhaust PM2.5	PM2.5 Total	Bio- CO2	NBio- CO2	Total CO2	CH4	N2O	CO2e
Category	tons/yr										MT/yr					
Hauling	0.0000	0.0000	0.0000	0.0000	0.0000	0.0000	0.0000	0.0000	0.0000	0.0000	0.0000	0.0000	0.0000	0.0000	0.0000	0.0000
Vendor	0.0000	0.0000	0.0000	0.0000	0.0000	0.0000	0.0000	0.0000	0.0000	0.0000	0.0000	0.0000	0.0000	0.0000	0.0000	0.0000
Worker	0.0000	0.0000	0.0000	0.0000	0.0000	0.0000	0.0000	0.0000	0.0000	0.0000	0.0000	0.0000	0.0000	0.0000	0.0000	0.0000
Total	**0.0000**	**0.0000**	**0.0000**	**0.0000**	**0.0000**	**0.0000**	**0.0000**	**0.0000**	**0.0000**	**0.0000**	**0.0000**	**0.0000**	**0.0000**	**0.0000**	**0.0000**	**0.0000**

Mitigated Construction On-Site

	ROG	NOx	CO	SO2	Fugitive PM10	Exhaust PM10	PM10 Total	Fugitive PM2.5	Exhaust PM2.5	PM2.5 Total	Bio- CO2	NBio- CO2	Total CO2	CH4	N2O	CO2e
Category	tons/yr										MT/yr					
Off-Road	4.4200e-003	0.0572	0.2112	3.4000e-004		4.5000e-004	4.5000e-004		4.5000e-004	4.5000e-004	0.0000	29.3008	29.3008	8.1200e-003	0.0000	29.4713
Total	**4.4200e-003**	**0.0572**	**0.2112**	**3.4000e-004**		**4.5000e-004**	**4.5000e-004**		**4.5000e-004**	**4.5000e-004**	**0.0000**	**29.3008**	**29.3008**	**8.1200e-003**	**0.0000**	**29.4713**

3.2 Year -3 Month 4 - 2017

Mitigated Construction Off-Site

	ROG	NOx	CO	SO2	Fugitive PM10	Exhaust PM10	PM10 Total	Fugitive PM2.5	Exhaust PM2.5	PM2.5 Total	Bio- CO2	NBio- CO2	Total CO2	CH4	N2O	CO2e
Category	tons/yr										MT/yr					
Hauling	0.0000	0.0000	0.0000	0.0000	0.0000	0.0000	0.0000	0.0000	0.0000	0.0000	0.0000	0.0000	0.0000	0.0000	0.0000	0.0000
Vendor	0.0000	0.0000	0.0000	0.0000	0.0000	0.0000	0.0000	0.0000	0.0000	0.0000	0.0000	0.0000	0.0000	0.0000	0.0000	0.0000
Worker	0.0000	0.0000	0.0000	0.0000	0.0000	0.0000	0.0000	0.0000	0.0000	0.0000	0.0000	0.0000	0.0000	0.0000	0.0000	0.0000
Total	**0.0000**	**0.0000**	**0.0000**	**0.0000**	**0.0000**	**0.0000**	**0.0000**	**0.0000**	**0.0000**	**0.0000**	**0.0000**	**0.0000**	**0.0000**	**0.0000**	**0.0000**	**0.0000**

3.3 Year -3 Month 5 - 2017

Unmitigated Construction On-Site

	ROG	NOx	CO	SO2	Fugitive PM10	Exhaust PM10	PM10 Total	Fugitive PM2.5	Exhaust PM2.5	PM2.5 Total	Bio- CO2	NBio- CO2	Total CO2	CH4	N2O	CO2e
Category	tons/yr										MT/yr					
Off-Road	0.0458	0.3749	0.2699	3.8000e-004		0.0234	0.0234		0.0218	0.0218	0.0000	33.3500	33.3500	9.4600e-003	0.0000	33.5487
Total	**0.0458**	**0.3749**	**0.2699**	**3.8000e-004**		**0.0234**	**0.0234**		**0.0218**	**0.0218**	**0.0000**	**33.3500**	**33.3500**	**9.4600e-003**	**0.0000**	**33.5487**

3.3 Year -3 Month 5 - 2017

Unmitigated Construction Off-Site

	ROG	NOx	CO	SO2	Fugitive PM10	Exhaust PM10	PM10 Total	Fugitive PM2.5	Exhaust PM2.5	PM2.5 Total	Bio- CO2	NBio- CO2	Total CO2	CH4	N2O	CO2e
Category	tons/yr										MT/yr					
Hauling	0.0000	0.0000	0.0000	0.0000	0.0000	0.0000	0.0000	0.0000	0.0000	0.0000	0.0000	0.0000	0.0000	0.0000	0.0000	0.0000
Vendor	0.0000	0.0000	0.0000	0.0000	0.0000	0.0000	0.0000	0.0000	0.0000	0.0000	0.0000	0.0000	0.0000	0.0000	0.0000	0.0000
Worker	0.0000	0.0000	0.0000	0.0000	0.0000	0.0000	0.0000	0.0000	0.0000	0.0000	0.0000	0.0000	0.0000	0.0000	0.0000	0.0000
Total	**0.0000**	**0.0000**	**0.0000**	**0.0000**	**0.0000**	**0.0000**	**0.0000**	**0.0000**	**0.0000**	**0.0000**	**0.0000**	**0.0000**	**0.0000**	**0.0000**	**0.0000**	**0.0000**

Mitigated Construction On-Site

	ROG	NOx	CO	SO2	Fugitive PM10	Exhaust PM10	PM10 Total	Fugitive PM2.5	Exhaust PM2.5	PM2.5 Total	Bio- CO2	NBio- CO2	Total CO2	CH4	N2O	CO2e
Category	tons/yr										MT/yr					
Off-Road	5.0900e-003	0.0623	0.2487	3.8000e-004		5.3000e-004	5.3000e-004		5.3000e-004	5.3000e-004	0.0000	33.3500	33.3500	9.4600e-003	0.0000	33.5487
Total	**5.0900e-003**	**0.0623**	**0.2487**	**3.8000e-004**		**5.3000e-004**	**5.3000e-004**		**5.3000e-004**	**5.3000e-004**	**0.0000**	**33.3500**	**33.3500**	**9.4600e-003**	**0.0000**	**33.5487**

3.3 Year -3 Month 5 - 2017

Mitigated Construction Off-Site

	ROG	NOx	CO	SO2	Fugitive PM10	Exhaust PM10	PM10 Total	Fugitive PM2.5	Exhaust PM2.5	PM2.5 Total	Bio- CO2	NBio- CO2	Total CO2	CH4	N2O	CO2e
Category	tons/yr										MT/yr					
Hauling	0.0000	0.0000	0.0000	0.0000	0.0000	0.0000	0.0000	0.0000	0.0000	0.0000	0.0000	0.0000	0.0000	0.0000	0.0000	0.0000
Vendor	0.0000	0.0000	0.0000	0.0000	0.0000	0.0000	0.0000	0.0000	0.0000	0.0000	0.0000	0.0000	0.0000	0.0000	0.0000	0.0000
Worker	0.0000	0.0000	0.0000	0.0000	0.0000	0.0000	0.0000	0.0000	0.0000	0.0000	0.0000	0.0000	0.0000	0.0000	0.0000	0.0000
Total	**0.0000**	**0.0000**	**0.0000**	**0.0000**	**0.0000**	**0.0000**	**0.0000**	**0.0000**	**0.0000**	**0.0000**	**0.0000**	**0.0000**	**0.0000**	**0.0000**	**0.0000**	**0.0000**

3.4 Year -3 Month 6 - 2017

Unmitigated Construction On-Site

	ROG	NOx	CO	SO2	Fugitive PM10	Exhaust PM10	PM10 Total	Fugitive PM2.5	Exhaust PM2.5	PM2.5 Total	Bio- CO2	NBio- CO2	Total CO2	CH4	N2O	CO2e
Category	tons/yr										MT/yr					
Off-Road	0.0182	0.1184	0.1043	1.5000e-004		6.1900e-003	6.1900e-003		5.9900e-003	5.9900e-003	0.0000	12.3896	12.3896	3.0700e-003	0.0000	12.4540
Total	**0.0182**	**0.1184**	**0.1043**	**1.5000e-004**		**6.1900e-003**	**6.1900e-003**		**5.9900e-003**	**5.9900e-003**	**0.0000**	**12.3896**	**12.3896**	**3.0700e-003**	**0.0000**	**12.4540**

3.4 Year -3 Month 6 - 2017

Unmitigated Construction Off-Site

	ROG	NOx	CO	SO2	Fugitive PM10	Exhaust PM10	PM10 Total	Fugitive PM2.5	Exhaust PM2.5	PM2.5 Total	Bio- CO2	NBio- CO2	Total CO2	CH4	N2O	CO2e
Category	tons/yr										MT/yr					
Hauling	0.0000	0.0000	0.0000	0.0000	0.0000	0.0000	0.0000	0.0000	0.0000	0.0000	0.0000	0.0000	0.0000	0.0000	0.0000	0.0000
Vendor	0.0000	0.0000	0.0000	0.0000	0.0000	0.0000	0.0000	0.0000	0.0000	0.0000	0.0000	0.0000	0.0000	0.0000	0.0000	0.0000
Worker	0.0000	0.0000	0.0000	0.0000	0.0000	0.0000	0.0000	0.0000	0.0000	0.0000	0.0000	0.0000	0.0000	0.0000	0.0000	0.0000
Total	**0.0000**	**0.0000**	**0.0000**	**0.0000**	**0.0000**	**0.0000**	**0.0000**	**0.0000**	**0.0000**	**0.0000**	**0.0000**	**0.0000**	**0.0000**	**0.0000**	**0.0000**	**0.0000**

Mitigated Construction On-Site

	ROG	NOx	CO	SO2	Fugitive PM10	Exhaust PM10	PM10 Total	Fugitive PM2.5	Exhaust PM2.5	PM2.5 Total	Bio- CO2	NBio- CO2	Total CO2	CH4	N2O	CO2e
Category	tons/yr										MT/yr					
Off-Road	1.9400e-003	0.0331	0.0632	1.5000e-004		1.7000e-004	1.7000e-004		1.7000e-004	1.7000e-004	0.0000	12.3895	12.3895	3.0700e-003	0.0000	12.4540
Total	**1.9400e-003**	**0.0331**	**0.0632**	**1.5000e-004**		**1.7000e-004**	**1.7000e-004**		**1.7000e-004**	**1.7000e-004**	**0.0000**	**12.3895**	**12.3895**	**3.0700e-003**	**0.0000**	**12.4540**

3.4 Year -3 Month 6 - 2017

Mitigated Construction Off-Site

	ROG	NOx	CO	SO2	Fugitive PM10	Exhaust PM10	PM10 Total	Fugitive PM2.5	Exhaust PM2.5	PM2.5 Total	Bio- CO2	NBio- CO2	Total CO2	CH4	N2O	CO2e
Category	tons/yr										MT/yr					
Hauling	0.0000	0.0000	0.0000	0.0000	0.0000	0.0000	0.0000	0.0000	0.0000	0.0000	0.0000	0.0000	0.0000	0.0000	0.0000	0.0000
Vendor	0.0000	0.0000	0.0000	0.0000	0.0000	0.0000	0.0000	0.0000	0.0000	0.0000	0.0000	0.0000	0.0000	0.0000	0.0000	0.0000
Worker	0.0000	0.0000	0.0000	0.0000	0.0000	0.0000	0.0000	0.0000	0.0000	0.0000	0.0000	0.0000	0.0000	0.0000	0.0000	0.0000
Total	**0.0000**	**0.0000**	**0.0000**	**0.0000**	**0.0000**	**0.0000**	**0.0000**	**0.0000**	**0.0000**	**0.0000**	**0.0000**	**0.0000**	**0.0000**	**0.0000**	**0.0000**	**0.0000**

3.5 Year -3 Month 7 - 2017

Unmitigated Construction On-Site

	ROG	NOx	CO	SO2	Fugitive PM10	Exhaust PM10	PM10 Total	Fugitive PM2.5	Exhaust PM2.5	PM2.5 Total	Bio- CO2	NBio- CO2	Total CO2	CH4	N2O	CO2e
Category	tons/yr										MT/yr					
Off-Road	2.0900e-003	0.0189	0.0186	3.0000e-005		8.5000e-004	8.5000e-004		8.3000e-004	8.3000e-004	0.0000	2.6487	2.6487	5.8000e-004	0.0000	2.6608
Total	**2.0900e-003**	**0.0189**	**0.0186**	**3.0000e-005**		**8.5000e-004**	**8.5000e-004**		**8.3000e-004**	**8.3000e-004**	**0.0000**	**2.6487**	**2.6487**	**5.8000e-004**	**0.0000**	**2.6608**

3.5 Year -3 Month 7 - 2017

Unmitigated Construction Off-Site

	ROG	NOx	CO	SO2	Fugitive PM10	Exhaust PM10	PM10 Total	Fugitive PM2.5	Exhaust PM2.5	PM2.5 Total	Bio- CO2	NBio- CO2	Total CO2	CH4	N2O	CO2e
Category	tons/yr										MT/yr					
Hauling	0.0000	0.0000	0.0000	0.0000	0.0000	0.0000	0.0000	0.0000	0.0000	0.0000	0.0000	0.0000	0.0000	0.0000	0.0000	0.0000
Vendor	0.0000	0.0000	0.0000	0.0000	0.0000	0.0000	0.0000	0.0000	0.0000	0.0000	0.0000	0.0000	0.0000	0.0000	0.0000	0.0000
Worker	0.0000	0.0000	0.0000	0.0000	0.0000	0.0000	0.0000	0.0000	0.0000	0.0000	0.0000	0.0000	0.0000	0.0000	0.0000	0.0000
Total	**0.0000**	**0.0000**	**0.0000**	**0.0000**	**0.0000**	**0.0000**	**0.0000**	**0.0000**	**0.0000**	**0.0000**	**0.0000**	**0.0000**	**0.0000**	**0.0000**	**0.0000**	**0.0000**

Mitigated Construction On-Site

	ROG	NOx	CO	SO2	Fugitive PM10	Exhaust PM10	PM10 Total	Fugitive PM2.5	Exhaust PM2.5	PM2.5 Total	Bio- CO2	NBio- CO2	Total CO2	CH4	N2O	CO2e
Category	tons/yr										MT/yr					
Off-Road	3.8000e-004	8.7600e-003	0.0118	3.0000e-005		3.0000e-005	3.0000e-005		3.0000e-005	3.0000e-005	0.0000	2.6487	2.6487	5.8000e-004	0.0000	2.6608
Total	**3.8000e-004**	**8.7600e-003**	**0.0118**	**3.0000e-005**		**3.0000e-005**	**3.0000e-005**		**3.0000e-005**	**3.0000e-005**	**0.0000**	**2.6487**	**2.6487**	**5.8000e-004**	**0.0000**	**2.6608**

3.5 Year -3 Month 7 - 2017

Mitigated Construction Off-Site

	ROG	NOx	CO	SO2	Fugitive PM10	Exhaust PM10	PM10 Total	Fugitive PM2.5	Exhaust PM2.5	PM2.5 Total	Bio- CO2	NBio- CO2	Total CO2	CH4	N2O	CO2e
Category	tons/yr										MT/yr					
Hauling	0.0000	0.0000	0.0000	0.0000	0.0000	0.0000	0.0000	0.0000	0.0000	0.0000	0.0000	0.0000	0.0000	0.0000	0.0000	0.0000
Vendor	0.0000	0.0000	0.0000	0.0000	0.0000	0.0000	0.0000	0.0000	0.0000	0.0000	0.0000	0.0000	0.0000	0.0000	0.0000	0.0000
Worker	0.0000	0.0000	0.0000	0.0000	0.0000	0.0000	0.0000	0.0000	0.0000	0.0000	0.0000	0.0000	0.0000	0.0000	0.0000	0.0000
Total	**0.0000**	**0.0000**	**0.0000**	**0.0000**	**0.0000**	**0.0000**	**0.0000**	**0.0000**	**0.0000**	**0.0000**	**0.0000**	**0.0000**	**0.0000**	**0.0000**	**0.0000**	**0.0000**

4.0 Operational Detail - Mobile

4.1 Mitigation Measures Mobile

	ROG	NOx	CO	SO2	Fugitive PM10	Exhaust PM10	PM10 Total	Fugitive PM2.5	Exhaust PM2.5	PM2.5 Total	Bio- CO2	NBio- CO2	Total CO2	CH4	N2O	CO2e
Category	tons/yr										MT/yr					
Mitigated	0.0000	0.0000	0.0000	0.0000	0.0000	0.0000	0.0000	0.0000	0.0000	0.0000	0.0000	0.0000	0.0000	0.0000	0.0000	0.0000
Unmitigated	0.0000	0.0000	0.0000	0.0000	0.0000	0.0000	0.0000	0.0000	0.0000	0.0000	0.0000	0.0000	0.0000	0.0000	0.0000	0.0000

4.2 Trip Summary Information

	Average Daily Trip Rate			Unmitigated	Mitigated
Land Use	Weekday	Saturday	Sunday	Annual VMT	Annual VMT
User Defined Industrial	0.00	0.00	0.00		
Total	0.00	0.00	0.00		

4.3 Trip Type Information

	Miles			Trip %			Trip Purpose %		
Land Use	H-W or C-W	H-S or C-C	H-O or C-NW	H-W or C-W	H-S or C-C	H-O or C-NW	Primary	Diverted	Pass-by
User Defined Industrial	8.80	4.60	4.60	0.00	0.00	0.00	0	0	0

LDA	LDT1	LDT2	MDV	LHD1	LHD2	MHD	HHD	OBUS	UBUS	MCY	SBUS	MH
0.491782	0.035344	0.208299	0.151084	0.049421	0.007284	0.022101	0.017711	0.002208	0.002109	0.008228	0.001403	0.003026

4.4 Fleet Mix

5.0 Energy Detail

Historical Energy Use: N

5.1 Mitigation Measures Energy

	ROG	NOx	CO	SO2	Fugitive PM10	Exhaust PM10	PM10 Total	Fugitive PM2.5	Exhaust PM2.5	PM2.5 Total	Bio- CO2	NBio- CO2	Total CO2	CH4	N2O	CO2e
Category	tons/yr										MT/yr					
Electricity Mitigated						0.0000	0.0000		0.0000	0.0000	0.0000	0.0000	0.0000	0.0000	0.0000	0.0000
Electricity Unmitigated						0.0000	0.0000		0.0000	0.0000	0.0000	0.0000	0.0000	0.0000	0.0000	0.0000
NaturalGas Mitigated	0.0000	0.0000	0.0000	0.0000		0.0000	0.0000		0.0000	0.0000	0.0000	0.0000	0.0000	0.0000	0.0000	0.0000
NaturalGas Unmitigated	0.0000	0.0000	0.0000	0.0000		0.0000	0.0000		0.0000	0.0000	0.0000	0.0000	0.0000	0.0000	0.0000	0.0000

5.2 Energy by Land Use - NaturalGas

Unmitigated

	NaturalGas Use	ROG	NOx	CO	SO2	Fugitive PM10	Exhaust PM10	PM10 Total	Fugitive PM2.5	Exhaust PM2.5	PM2.5 Total	Bio- CO2	NBio- CO2	Total CO2	CH4	N2O	CO2e
Land Use	kBTU/yr	tons/yr										MT/yr					
User Defined Industrial	0	0.0000	0.0000	0.0000	0.0000		0.0000	0.0000		0.0000	0.0000	0.0000	0.0000	0.0000	0.0000	0.0000	0.0000
Total		**0.0000**	**0.0000**	**0.0000**	**0.0000**		**0.0000**	**0.0000**		**0.0000**	**0.0000**	**0.0000**	**0.0000**	**0.0000**	**0.0000**	**0.0000**	**0.0000**

5.2 Energy by Land Use - NaturalGas

Mitigated

	NaturalGas Use	ROG	NOx	CO	SO2	Fugitive PM10	Exhaust PM10	PM10 Total	Fugitive PM2.5	Exhaust PM2.5	PM2.5 Total	Bio- CO2	NBio- CO2	Total CO2	CH4	N2O	CO2e
Land Use	kBTU/yr	tons/yr										MT/yr					
User Defined Industrial	0	0.0000	0.0000	0.0000	0.0000		0.0000	0.0000		0.0000	0.0000	0.0000	0.0000	0.0000	0.0000	0.0000	0.0000
Total		**0.0000**	**0.0000**	**0.0000**	**0.0000**		**0.0000**	**0.0000**		**0.0000**	**0.0000**	**0.0000**	**0.0000**	**0.0000**	**0.0000**	**0.0000**	**0.0000**

5.3 Energy by Land Use - Electricity

Unmitigated

	Electricity Use	Total CO2	CH4	N2O	CO2e
Land Use	kWh/yr	MT/yr			
User Defined Industrial	0	0.0000	0.0000	0.0000	0.0000
Total		**0.0000**	**0.0000**	**0.0000**	**0.0000**

5.3 Energy by Land Use - Electricity

Mitigated

	Electricity Use	Total CO2	CH4	N2O	CO2e
Land Use	kWh/yr	MT/yr			
User Defined Industrial	0	0.0000	0.0000	0.0000	0.0000
Total		**0.0000**	**0.0000**	**0.0000**	**0.0000**

6.0 Area Detail

6.1 Mitigation Measures Area

	ROG	NOx	CO	SO2	Fugitive PM10	Exhaust PM10	PM10 Total	Fugitive PM2.5	Exhaust PM2.5	PM2.5 Total	Bio- CO2	NBio- CO2	Total CO2	CH4	N2O	CO2e
Category	tons/yr										MT/yr					
Mitigated	0.0000					0.0000	0.0000		0.0000	0.0000	0.0000	0.0000	0.0000	0.0000	0.0000	0.0000
Unmitigated	0.0000					0.0000	0.0000		0.0000	0.0000	0.0000	0.0000	0.0000	0.0000	0.0000	0.0000

6.2 Area by SubCategory

Unmitigated

	ROG	NOx	CO	SO2	Fugitive PM10	Exhaust PM10	PM10 Total	Fugitive PM2.5	Exhaust PM2.5	PM2.5 Total	Bio- CO2	NBio- CO2	Total CO2	CH4	N2O	CO2e
SubCategory	tons/yr										MT/yr					
Architectural Coating	0.0000					0.0000	0.0000		0.0000	0.0000	0.0000	0.0000	0.0000	0.0000	0.0000	0.0000
Total	**0.0000**					**0.0000**	**0.0000**		**0.0000**	**0.0000**	**0.0000**	**0.0000**	**0.0000**	**0.0000**	**0.0000**	**0.0000**

Mitigated

	ROG	NOx	CO	SO2	Fugitive PM10	Exhaust PM10	PM10 Total	Fugitive PM2.5	Exhaust PM2.5	PM2.5 Total	Bio- CO2	NBio- CO2	Total CO2	CH4	N2O	CO2e
SubCategory	tons/yr										MT/yr					
Architectural Coating	0.0000					0.0000	0.0000		0.0000	0.0000	0.0000	0.0000	0.0000	0.0000	0.0000	0.0000
Total	**0.0000**					**0.0000**	**0.0000**		**0.0000**	**0.0000**	**0.0000**	**0.0000**	**0.0000**	**0.0000**	**0.0000**	**0.0000**

7.0 Water Detail

7.1 Mitigation Measures Water

	Total CO2	CH4	N2O	CO2e
Category	MT/yr			
Mitigated	0.0000	0.0000	0.0000	0.0000
Unmitigated	0.0000	0.0000	0.0000	0.0000

7.2 Water by Land Use

Unmitigated

	Indoor/Outdoor Use	Total CO2	CH4	N2O	CO2e
Land Use	Mgal	MT/yr			
User Defined Industrial	0 / 0	0.0000	0.0000	0.0000	0.0000
Total		**0.0000**	**0.0000**	**0.0000**	**0.0000**

7.2 Water by Land Use

Mitigated

	Indoor/Outdoor Use	Total CO2	CH4	N2O	CO2e
Land Use	Mgal	MT/yr			
User Defined Industrial	0 / 0	0.0000	0.0000	0.0000	0.0000
Total		**0.0000**	**0.0000**	**0.0000**	**0.0000**

8.0 Waste Detail

8.1 Mitigation Measures Waste

Category/Year

	Total CO2	CH4	N2O	CO2e
	MT/yr			
Mitigated	0.0000	0.0000	0.0000	0.0000
Unmitigated	0.0000	0.0000	0.0000	0.0000

8.2 Waste by Land Use

Unmitigated

	Waste Disposed	Total CO2	CH4	N2O	CO2e
Land Use	tons	MT/yr			
User Defined Industrial	0	0.0000	0.0000	0.0000	0.0000
Total		**0.0000**	**0.0000**	**0.0000**	**0.0000**

Mitigated

	Waste Disposed	Total CO2	CH4	N2O	CO2e
Land Use	tons	MT/yr			
User Defined Industrial	0	0.0000	0.0000	0.0000	0.0000
Total		**0.0000**	**0.0000**	**0.0000**	**0.0000**

9.0 Operational Offroad

Equipment Type	Number	Hours/Day	Days/Year	Horse Power	Load Factor	Fuel Type

10.0 Vegetation

AERA - Santa Barbara - Cat Canyon 115KV Interconnect Construction Equipment

Santa Barbara-North of Santa Ynez County, Annual

1.0 Project Characteristics

1.1 Land Usage

Land Uses	Size	Metric	Lot Acreage	Floor Surface Area	Population
User Defined Industrial	2,100.00	User Defined Unit	2,100.00	0.00	0

1.2 Other Project Characteristics

Urbanization	Rural	**Wind Speed (m/s)**	3.1	**Precipitation Freq (Days)**	37
Climate Zone	4			**Operational Year**	2035
Utility Company	Pacific Gas & Electric Company				
CO2 Intensity (lb/MWhr)	641.35	**CH4 Intensity (lb/MWhr)**	0.029	**N2O Intensity (lb/MWhr)**	0.006

1.3 User Entered Comments & Non-Default Data

Project Characteristics -

Land Use - The project will be located in the East Cat Canyon oil field on approximately 2,100 acres.

Construction Phase - Anticipated Construction Schedule Provided by the Project Applicant.

Off-road Equipment - Units and Hours/day provided by Project Applicant. HP were adjusted whenever data was available for the size of the equipment provided by the applicant.

Trips and VMT - Employee Trips are included in the offsite calculations.

On-road Fugitive Dust -

Vehicle Trips - Construction Run Only

Vechicle Emission Factors -

Vechicle Emission Factors -

Vechicle Emission Factors -

Road Dust -

Consumer Products - Construction Run Only

Landscape Equipment - Construction Run Only

Construction Off-road Equipment Mitigation - Using Tier 4 Final Engines to Mitigate Construction Emissions

Off-road Equipment - Anticipated Equipment and Schedule

Area Coating -

Table Name	Column Name	Default Value	New Value
tblAreaCoating	ReapplicationRatePercent	10	0
tblConstEquipMitigation	NumberOfEquipmentMitigated	0.00	1.00
tblConstEquipMitigation	NumberOfEquipmentMitigated	0.00	6.00
tblConstEquipMitigation	Tier	No Change	Tier 4 Final
tblConstEquipMitigation	Tier	No Change	Tier 4 Final
tblConstructionPhase	NumDays	155,000.00	53.00
tblConstructionPhase	NumDaysWeek	5.00	6.00
tblLandUse	LotAcreage	0.00	2,100.00
tblOffRoadEquipment	HorsePower	171.00	180.00
tblOffRoadEquipment	HorsePower	171.00	210.00
tblOffRoadEquipment	OffRoadEquipmentUnitAmount	0.00	3.00
tblOffRoadEquipment	OffRoadEquipmentUnitAmount	0.00	3.00
tblOffRoadEquipment	PhaseName		Year -3
tblOffRoadEquipment	PhaseName		Year -3
tblOffRoadEquipment	UsageHours	7.00	10.00
tblProjectCharacteristics	OperationalYear	2014	2035
tblProjectCharacteristics	UrbanizationLevel	Urban	Rural

2.0 Emissions Summary

2.1 Overall Construction

Unmitigated Construction

	ROG	NOx	CO	SO2	Fugitive PM10	Exhaust PM10	PM10 Total	Fugitive PM2.5	Exhaust PM2.5	PM2.5 Total	Bio- CO2	NBio- CO2	Total CO2	CH4	N2O	CO2e
Year	tons/yr										MT/yr					
2017	0.0215	0.2548	0.0913	1.9000e-004	0.0000	0.0114	0.0114	0.0000	0.0105	0.0105	0.0000	17.3463	17.3463	5.3100e-003	0.0000	17.4579
Total	**0.0215**	**0.2548**	**0.0913**	**1.9000e-004**	**0.0000**	**0.0114**	**0.0114**	**0.0000**	**0.0105**	**0.0105**	**0.0000**	**17.3463**	**17.3463**	**5.3100e-003**	**0.0000**	**17.4579**

Mitigated Construction

	ROG	NOx	CO	SO2	Fugitive PM10	Exhaust PM10	PM10 Total	Fugitive PM2.5	Exhaust PM2.5	PM2.5 Total	Bio- CO2	NBio- CO2	Total CO2	CH4	N2O	CO2e
Year	tons/yr										MT/yr					
2017	2.3000e-003	9.9600e-003	0.0842	1.9000e-004	0.0000	3.1000e-004	3.1000e-004	0.0000	3.1000e-004	3.1000e-004	0.0000	17.3463	17.3463	5.3100e-003	0.0000	17.4579
Total	**2.3000e-003**	**9.9600e-003**	**0.0842**	**1.9000e-004**	**0.0000**	**3.1000e-004**	**3.1000e-004**	**0.0000**	**3.1000e-004**	**3.1000e-004**	**0.0000**	**17.3463**	**17.3463**	**5.3100e-003**	**0.0000**	**17.4579**

	ROG	**NOx**	**CO**	**SO2**	**Fugitive PM10**	**Exhaust PM10**	**PM10 Total**	**Fugitive PM2.5**	**Exhaust PM2.5**	**PM2.5 Total**	**Bio- CO2**	**NBio-CO2**	**Total CO2**	**CH4**	**N20**	**CO2e**
Percent Reduction	**89.28**	**96.09**	**7.73**	**0.00**	**0.00**	**97.27**	**97.27**	**0.00**	**97.03**	**97.03**	**0.00**	**0.00**	**0.00**	**0.00**	**0.00**	**0.00**

2.2 Overall Operational

Unmitigated Operational

	ROG	NOx	CO	SO2	Fugitive PM10	Exhaust PM10	PM10 Total	Fugitive PM2.5	Exhaust PM2.5	PM2.5 Total	Bio- CO2	NBio- CO2	Total CO2	CH4	N2O	CO2e
Category	tons/yr										MT/yr					
Area	0.0000					0.0000	0.0000		0.0000	0.0000	0.0000	0.0000	0.0000	0.0000	0.0000	0.0000
Energy	0.0000	0.0000	0.0000	0.0000		0.0000	0.0000		0.0000	0.0000	0.0000	0.0000	0.0000	0.0000	0.0000	0.0000
Mobile	0.0000	0.0000	0.0000	0.0000	0.0000	0.0000	0.0000	0.0000	0.0000	0.0000	0.0000	0.0000	0.0000	0.0000	0.0000	0.0000
Waste						0.0000	0.0000		0.0000	0.0000	0.0000	0.0000	0.0000	0.0000	0.0000	0.0000
Water						0.0000	0.0000		0.0000	0.0000	0.0000	0.0000	0.0000	0.0000	0.0000	0.0000
Total	**0.0000**	**0.0000**	**0.0000**	**0.0000**	**0.0000**	**0.0000**	**0.0000**	**0.0000**	**0.0000**	**0.0000**	**0.0000**	**0.0000**	**0.0000**	**0.0000**	**0.0000**	**0.0000**

2.2 Overall Operational

Mitigated Operational

	ROG	NOx	CO	SO2	Fugitive PM10	Exhaust PM10	PM10 Total	Fugitive PM2.5	Exhaust PM2.5	PM2.5 Total	Bio- CO2	NBio- CO2	Total CO2	CH4	N2O	CO2e
Category	tons/yr										MT/yr					
Area	0.0000					0.0000	0.0000		0.0000	0.0000	0.0000	0.0000	0.0000	0.0000	0.0000	0.0000
Energy	0.0000	0.0000	0.0000	0.0000		0.0000	0.0000		0.0000	0.0000	0.0000	0.0000	0.0000	0.0000	0.0000	0.0000
Mobile	0.0000	0.0000	0.0000	0.0000	0.0000	0.0000	0.0000	0.0000	0.0000	0.0000	0.0000	0.0000	0.0000	0.0000	0.0000	0.0000
Waste						0.0000	0.0000		0.0000	0.0000	0.0000	0.0000	0.0000	0.0000	0.0000	0.0000
Water						0.0000	0.0000		0.0000	0.0000	0.0000	0.0000	0.0000	0.0000	0.0000	0.0000
Total	**0.0000**	**0.0000**	**0.0000**	**0.0000**	**0.0000**	**0.0000**	**0.0000**	**0.0000**	**0.0000**	**0.0000**	**0.0000**	**0.0000**	**0.0000**	**0.0000**	**0.0000**	**0.0000**

	ROG	**NOx**	**CO**	**SO2**	**Fugitive PM10**	**Exhaust PM10**	**PM10 Total**	**Fugitive PM2.5**	**Exhaust PM2.5**	**PM2.5 Total**	**Bio- CO2**	**NBio-CO2**	**Total CO2**	**CH4**	**N20**	**CO2e**
Percent Reduction	**0.00**	**0.00**	**0.00**	**0.00**	**0.00**	**0.00**	**0.00**	**0.00**	**0.00**	**0.00**	**0.00**	**0.00**	**0.00**	**0.00**	**0.00**	**0.00**

3.0 Construction Detail

Construction Phase

Phase Number	Phase Name	Phase Type	Start Date	End Date	Num Days Week	Num Days	Phase Description
1	Year -3	Building Construction	5/1/2017	6/30/2017	6	53	

Acres of Grading (Site Preparation Phase): 0

Acres of Grading (Grading Phase): 0

Acres of Paving: 0

Residential Indoor: 0; Residential Outdoor: 0; Non-Residential Indoor: 0; Non-Residential Outdoor: 0 (Architectural Coating – sqft)

OffRoad Equipment

Phase Name	Offroad Equipment Type	Amount	Usage Hours	Horse Power	Load Factor
Year -3	Cranes	1	10.00	226	0.29
Year -3	Other Construction Equipment	3	10.00	180	0.42
Year -3	Other Construction Equipment	3	10.00	210	0.42

Trips and VMT

Phase Name	Offroad Equipment Count	Worker Trip Number	Vendor Trip Number	Hauling Trip Number	Worker Trip Length	Vendor Trip Length	Hauling Trip Length	Worker Vehicle Class	Vendor Vehicle Class	Hauling Vehicle Class
Year -3	7	0.00	0.00	0.00	12.30	4.60	20.00	LD_Mix	HDT_Mix	HHDT

3.1 Mitigation Measures Construction

Use Cleaner Engines for Construction Equipment

Clean Paved Roads

3.2 Year -3 - 2017

Unmitigated Construction On-Site

	ROG	NOx	CO	SO2	Fugitive PM10	Exhaust PM10	PM10 Total	Fugitive PM2.5	Exhaust PM2.5	PM2.5 Total	Bio- CO2	NBio- CO2	Total CO2	CH4	N2O	CO2e
Category	tons/yr										MT/yr					
Off-Road	0.0215	0.2548	0.0913	1.9000e-004		0.0114	0.0114		0.0105	0.0105	0.0000	17.3463	17.3463	5.3100e-003	0.0000	17.4579
Total	**0.0215**	**0.2548**	**0.0913**	**1.9000e-004**		**0.0114**	**0.0114**		**0.0105**	**0.0105**	**0.0000**	**17.3463**	**17.3463**	**5.3100e-003**	**0.0000**	**17.4579**

Unmitigated Construction Off-Site

	ROG	NOx	CO	SO2	Fugitive PM10	Exhaust PM10	PM10 Total	Fugitive PM2.5	Exhaust PM2.5	PM2.5 Total	Bio- CO2	NBio- CO2	Total CO2	CH4	N2O	CO2e
Category	tons/yr										MT/yr					
Hauling	0.0000	0.0000	0.0000	0.0000	0.0000	0.0000	0.0000	0.0000	0.0000	0.0000	0.0000	0.0000	0.0000	0.0000	0.0000	0.0000
Vendor	0.0000	0.0000	0.0000	0.0000	0.0000	0.0000	0.0000	0.0000	0.0000	0.0000	0.0000	0.0000	0.0000	0.0000	0.0000	0.0000
Worker	0.0000	0.0000	0.0000	0.0000	0.0000	0.0000	0.0000	0.0000	0.0000	0.0000	0.0000	0.0000	0.0000	0.0000	0.0000	0.0000
Total	**0.0000**	**0.0000**	**0.0000**	**0.0000**	**0.0000**	**0.0000**	**0.0000**	**0.0000**	**0.0000**	**0.0000**	**0.0000**	**0.0000**	**0.0000**	**0.0000**	**0.0000**	**0.0000**

3.2 Year -3 - 2017

Mitigated Construction On-Site

	ROG	NOx	CO	SO2	Fugitive PM10	Exhaust PM10	PM10 Total	Fugitive PM2.5	Exhaust PM2.5	PM2.5 Total	Bio- CO2	NBio- CO2	Total CO2	CH4	N2O	CO2e
Category	tons/yr										MT/yr					
Off-Road	2.3000e-003	9.9600e-003	0.0842	1.9000e-004		3.1000e-004	3.1000e-004		3.1000e-004	3.1000e-004	0.0000	17.3463	17.3463	5.3100e-003	0.0000	17.4579
Total	**2.3000e-003**	**9.9600e-003**	**0.0842**	**1.9000e-004**		**3.1000e-004**	**3.1000e-004**		**3.1000e-004**	**3.1000e-004**	**0.0000**	**17.3463**	**17.3463**	**5.3100e-003**	**0.0000**	**17.4579**

Mitigated Construction Off-Site

	ROG	NOx	CO	SO2	Fugitive PM10	Exhaust PM10	PM10 Total	Fugitive PM2.5	Exhaust PM2.5	PM2.5 Total	Bio- CO2	NBio- CO2	Total CO2	CH4	N2O	CO2e
Category	tons/yr										MT/yr					
Hauling	0.0000	0.0000	0.0000	0.0000	0.0000	0.0000	0.0000	0.0000	0.0000	0.0000	0.0000	0.0000	0.0000	0.0000	0.0000	0.0000
Vendor	0.0000	0.0000	0.0000	0.0000	0.0000	0.0000	0.0000	0.0000	0.0000	0.0000	0.0000	0.0000	0.0000	0.0000	0.0000	0.0000
Worker	0.0000	0.0000	0.0000	0.0000	0.0000	0.0000	0.0000	0.0000	0.0000	0.0000	0.0000	0.0000	0.0000	0.0000	0.0000	0.0000
Total	**0.0000**	**0.0000**	**0.0000**	**0.0000**	**0.0000**	**0.0000**	**0.0000**	**0.0000**	**0.0000**	**0.0000**	**0.0000**	**0.0000**	**0.0000**	**0.0000**	**0.0000**	**0.0000**

4.0 Operational Detail - Mobile

4.1 Mitigation Measures Mobile

	ROG	NOx	CO	SO2	Fugitive PM10	Exhaust PM10	PM10 Total	Fugitive PM2.5	Exhaust PM2.5	PM2.5 Total	Bio- CO2	NBio- CO2	Total CO2	CH4	N2O	CO2e
Category	tons/yr										MT/yr					
Mitigated	0.0000	0.0000	0.0000	0.0000	0.0000	0.0000	0.0000	0.0000	0.0000	0.0000	0.0000	0.0000	0.0000	0.0000	0.0000	0.0000
Unmitigated	0.0000	0.0000	0.0000	0.0000	0.0000	0.0000	0.0000	0.0000	0.0000	0.0000	0.0000	0.0000	0.0000	0.0000	0.0000	0.0000

4.2 Trip Summary Information

	Average Daily Trip Rate			Unmitigated	Mitigated
Land Use	Weekday	Saturday	Sunday	Annual VMT	Annual VMT
User Defined Industrial	0.00	0.00	0.00		
Total	0.00	0.00	0.00		

4.3 Trip Type Information

	Miles			Trip %			Trip Purpose %		
Land Use	H-W or C-W	H-S or C-C	H-O or C-NW	H-W or C-W	H-S or C-C	H-O or C-NW	Primary	Diverted	Pass-by
User Defined Industrial	8.80	4.60	4.60	0.00	0.00	0.00	0	0	0

4.4 Fleet Mix

LDA	LDT1	LDT2	MDV	LHD1	LHD2	MHD	HHD	OBUS	UBUS	MCY	SBUS	MH
0.491782	0.035344	0.208299	0.151084	0.049421	0.007284	0.022101	0.017711	0.002208	0.002109	0.008228	0.001403	0.003026

5.0 Energy Detail

Historical Energy Use: N

5.1 Mitigation Measures Energy

	ROG	NOx	CO	SO2	Fugitive PM10	Exhaust PM10	PM10 Total	Fugitive PM2.5	Exhaust PM2.5	PM2.5 Total	Bio- CO2	NBio- CO2	Total CO2	CH4	N2O	CO2e
Category	tons/yr										MT/yr					
Electricity Mitigated						0.0000	0.0000		0.0000	0.0000	0.0000	0.0000	0.0000	0.0000	0.0000	0.0000
Electricity Unmitigated						0.0000	0.0000		0.0000	0.0000	0.0000	0.0000	0.0000	0.0000	0.0000	0.0000
NaturalGas Mitigated	0.0000	0.0000	0.0000	0.0000		0.0000	0.0000		0.0000	0.0000	0.0000	0.0000	0.0000	0.0000	0.0000	0.0000
NaturalGas Unmitigated	0.0000	0.0000	0.0000	0.0000		0.0000	0.0000		0.0000	0.0000	0.0000	0.0000	0.0000	0.0000	0.0000	0.0000

5.2 Energy by Land Use - NaturalGas

Unmitigated

	NaturalGas Use	ROG	NOx	CO	SO2	Fugitive PM10	Exhaust PM10	PM10 Total	Fugitive PM2.5	Exhaust PM2.5	PM2.5 Total	Bio- CO2	NBio- CO2	Total CO2	CH4	N2O	CO2e
Land Use	kBTU/yr	tons/yr										MT/yr					
User Defined Industrial	0	0.0000	0.0000	0.0000	0.0000		0.0000	0.0000		0.0000	0.0000	0.0000	0.0000	0.0000	0.0000	0.0000	0.0000
Total		**0.0000**	**0.0000**	**0.0000**	**0.0000**		**0.0000**	**0.0000**		**0.0000**	**0.0000**	**0.0000**	**0.0000**	**0.0000**	**0.0000**	**0.0000**	**0.0000**

5.2 Energy by Land Use - NaturalGas

Mitigated

	NaturalGas Use	ROG	NOx	CO	SO2	Fugitive PM10	Exhaust PM10	PM10 Total	Fugitive PM2.5	Exhaust PM2.5	PM2.5 Total	Bio- CO2	NBio- CO2	Total CO2	CH4	N2O	CO2e
Land Use	kBTU/yr	tons/yr										MT/yr					
User Defined Industrial	0	0.0000	0.0000	0.0000	0.0000		0.0000	0.0000		0.0000	0.0000	0.0000	0.0000	0.0000	0.0000	0.0000	0.0000
Total		**0.0000**	**0.0000**	**0.0000**	**0.0000**		**0.0000**	**0.0000**		**0.0000**	**0.0000**	**0.0000**	**0.0000**	**0.0000**	**0.0000**	**0.0000**	**0.0000**

5.3 Energy by Land Use - Electricity

Unmitigated

	Electricity Use	Total CO2	CH4	N2O	CO2e
Land Use	kWh/yr	MT/yr			
User Defined Industrial	0	0.0000	0.0000	0.0000	0.0000
Total		**0.0000**	**0.0000**	**0.0000**	**0.0000**

5.3 Energy by Land Use - Electricity

Mitigated

	Electricity Use	Total CO2	CH4	N2O	CO2e
Land Use	kWh/yr	MT/yr			
User Defined Industrial	0	0.0000	0.0000	0.0000	0.0000
Total		**0.0000**	**0.0000**	**0.0000**	**0.0000**

6.0 Area Detail

6.1 Mitigation Measures Area

	ROG	NOx	CO	SO2	Fugitive PM10	Exhaust PM10	PM10 Total	Fugitive PM2.5	Exhaust PM2.5	PM2.5 Total	Bio- CO2	NBio- CO2	Total CO2	CH4	N2O	CO2e
Category	tons/yr										MT/yr					
Mitigated	0.0000					0.0000	0.0000		0.0000	0.0000	0.0000	0.0000	0.0000	0.0000	0.0000	0.0000
Unmitigated	0.0000					0.0000	0.0000		0.0000	0.0000	0.0000	0.0000	0.0000	0.0000	0.0000	0.0000

6.2 Area by SubCategory

Unmitigated

	ROG	NOx	CO	SO2	Fugitive PM10	Exhaust PM10	PM10 Total	Fugitive PM2.5	Exhaust PM2.5	PM2.5 Total	Bio- CO2	NBio- CO2	Total CO2	CH4	N2O	CO2e
SubCategory	tons/yr										MT/yr					
Architectural Coating	0.0000					0.0000	0.0000		0.0000	0.0000	0.0000	0.0000	0.0000	0.0000	0.0000	0.0000
Total	**0.0000**					**0.0000**	**0.0000**		**0.0000**	**0.0000**	**0.0000**	**0.0000**	**0.0000**	**0.0000**	**0.0000**	**0.0000**

Mitigated

	ROG	NOx	CO	SO2	Fugitive PM10	Exhaust PM10	PM10 Total	Fugitive PM2.5	Exhaust PM2.5	PM2.5 Total	Bio- CO2	NBio- CO2	Total CO2	CH4	N2O	CO2e
SubCategory	tons/yr										MT/yr					
Architectural Coating	0.0000					0.0000	0.0000		0.0000	0.0000	0.0000	0.0000	0.0000	0.0000	0.0000	0.0000
Total	**0.0000**					**0.0000**	**0.0000**		**0.0000**	**0.0000**	**0.0000**	**0.0000**	**0.0000**	**0.0000**	**0.0000**	**0.0000**

7.0 Water Detail

7.1 Mitigation Measures Water

	Total CO2	CH4	N2O	CO2e
Category	MT/yr			
Mitigated	0.0000	0.0000	0.0000	0.0000
Unmitigated	0.0000	0.0000	0.0000	0.0000

7.2 Water by Land Use

Unmitigated

	Indoor/Outdoor Use	Total CO2	CH4	N2O	CO2e
Land Use	Mgal	MT/yr			
User Defined Industrial	0 / 0	0.0000	0.0000	0.0000	0.0000
Total		**0.0000**	**0.0000**	**0.0000**	**0.0000**

7.2 Water by Land Use

Mitigated

	Indoor/Outdoor Use	Total CO2	CH4	N2O	CO2e
Land Use	Mgal	MT/yr			
User Defined Industrial	0 / 0	0.0000	0.0000	0.0000	0.0000
Total		**0.0000**	**0.0000**	**0.0000**	**0.0000**

8.0 Waste Detail

8.1 Mitigation Measures Waste

Category/Year

	Total CO2	CH4	N2O	CO2e
	MT/yr			
Unmitigated	0.0000	0.0000	0.0000	0.0000
Mitigated	0.0000	0.0000	0.0000	0.0000

8.2 Waste by Land Use

Unmitigated

	Waste Disposed	Total CO2	CH4	N2O	CO2e
Land Use	tons	MT/yr			
User Defined Industrial	0	0.0000	0.0000	0.0000	0.0000
Total		**0.0000**	**0.0000**	**0.0000**	**0.0000**

Mitigated

	Waste Disposed	Total CO2	CH4	N2O	CO2e
Land Use	tons	MT/yr			
User Defined Industrial	0	0.0000	0.0000	0.0000	0.0000
Total		**0.0000**	**0.0000**	**0.0000**	**0.0000**

9.0 Operational Offroad

Equipment Type	Number	Hours/Day	Days/Year	Horse Power	Load Factor	Fuel Type

10.0 Vegetation

AERA - Santa Barbara - Cat Canyon Construction Fugitive Dust Unpaved Road Travel Emission Calculatio

Santa Barbara-North of Santa Ynez County, Annual

1.0 Project Characteristics

1.1 Land Usage

Land Uses	Size	Metric	Lot Acreage	Floor Surface Area	Population
User Defined Industrial	2,100.00	User Defined Unit	2,100.00	0.00	0

1.2 Other Project Characteristics

Urbanization	Rural	**Wind Speed (m/s)**	3.1	**Precipitation Freq (Days)**	37
Climate Zone	4			**Operational Year**	2035
Utility Company	Pacific Gas & Electric Company				
CO2 Intensity (lb/MWhr)	641.35	**CH4 Intensity (lb/MWhr)**	0.029	**N2O Intensity (lb/MWhr)**	0.006

1.3 User Entered Comments & Non-Default Data

Project Characteristics -

Land Use - The project will be located in the East Cat Canyon oil field on approximately 2,100 acres.

Construction Phase - All annual trips were included in 1 day since some years have very limited annual trips. This was a simply way to model the trips in the appropriate year.

Grading -

Consumer Products - Construction Run Only

Landscape Equipment - Construction Run Only

Construction Off-road Equipment Mitigation -

Trips and VMT - Annual trips were all included in one day. Travel is all on paved roads until the site entrance and then an average round trip distance of 0.6 miles was calculated.

On-road Fugitive Dust - This is a unpaved road travel only so % Paved was set to zero.

Table Name	Column Name	Default Value	New Value
tblConstructionPhase	NumDays	15,500.00	1.00
tblConstructionPhase	NumDays	15,500.00	1.00
tblConstructionPhase	NumDays	15,500.00	1.00
tblConstructionPhase	NumDays	15,500.00	1.00
tblConstructionPhase	NumDays	15,500.00	1.00
tblConstructionPhase	NumDays	15,500.00	1.00
tblConstructionPhase	NumDays	15,500.00	1.00
tblConstructionPhase	NumDays	15,500.00	1.00
tblConstructionPhase	NumDays	15,500.00	1.00
tblConstructionPhase	NumDays	15,500.00	1.00
tblConstructionPhase	NumDays	15,500.00	1.00
tblConstructionPhase	NumDays	15,500.00	1.00
tblConstructionPhase	NumDays	15,500.00	1.00
tblConstructionPhase	NumDays	15,500.00	1.00
tblConstructionPhase	NumDays	15,500.00	1.00
tblConstructionPhase	NumDays	15,500.00	1.00
tblConstructionPhase	NumDays	15,500.00	1.00
tblConstructionPhase	NumDays	15,500.00	1.00
tblConstructionPhase	NumDays	15,500.00	1.00
tblConstructionPhase	NumDays	15,500.00	1.00
tblConstructionPhase	NumDays	15,500.00	1.00
tblConstructionPhase	NumDaysWeek	5.00	6.00
tblConstructionPhase	NumDaysWeek	5.00	6.00
tblConstructionPhase	NumDaysWeek	5.00	6.00
tblConstructionPhase	NumDaysWeek	5.00	6.00
tblConstructionPhase	NumDaysWeek	5.00	6.00
tblConstructionPhase	NumDaysWeek	5.00	6.00
tblConstructionPhase	NumDaysWeek	5.00	6.00

tblConstructionPhase	NumDaysWeek	5.00	6.00
tblConstructionPhase	NumDaysWeek	5.00	6.00
tblConstructionPhase	NumDaysWeek	5.00	6.00
tblConstructionPhase	NumDaysWeek	5.00	6.00
tblConstructionPhase	NumDaysWeek	5.00	6.00
tblConstructionPhase	NumDaysWeek	5.00	6.00
tblConstructionPhase	NumDaysWeek	5.00	6.00
tblConstructionPhase	NumDaysWeek	5.00	6.00
tblConstructionPhase	NumDaysWeek	5.00	6.00
tblConstructionPhase	NumDaysWeek	5.00	6.00
tblConstructionPhase	NumDaysWeek	5.00	6.00
tblConstructionPhase	NumDaysWeek	5.00	6.00
tblConstructionPhase	PhaseEndDate	1/2/2025	1/1/2026
tblConstructionPhase	PhaseEndDate	1/2/2026	1/1/2028
tblConstructionPhase	PhaseEndDate	1/3/2028	1/1/2029
tblConstructionPhase	PhaseEndDate	1/2/2029	1/1/2030
tblConstructionPhase	PhaseEndDate	1/2/2030	1/1/2031
tblConstructionPhase	PhaseEndDate	1/2/2031	1/1/2032
tblConstructionPhase	PhaseEndDate	1/2/2032	1/1/2033
tblConstructionPhase	PhaseEndDate	1/3/2033	1/2/2034
tblConstructionPhase	PhaseEndDate	1/3/2034	1/1/2035
tblConstructionPhase	PhaseEndDate	1/2/2035	1/1/2036
tblConstructionPhase	PhaseEndDate	1/3/2017	1/1/2018
tblConstructionPhase	PhaseEndDate	1/2/2036	1/1/2037
tblConstructionPhase	PhaseEndDate	1/2/2018	1/1/2019
tblConstructionPhase	PhaseEndDate	1/2/2019	1/1/2020
tblConstructionPhase	PhaseEndDate	1/2/2020	1/1/2021

tblConstructionPhase	PhaseEndDate	1/2/2021	1/1/2022
tblConstructionPhase	PhaseEndDate	1/3/2022	1/2/2023
tblConstructionPhase	PhaseEndDate	1/3/2023	1/1/2024
tblConstructionPhase	PhaseEndDate	1/2/2024	1/1/2025
tblConstructionPhase	PhaseStartDate	1/2/2025	1/1/2026
tblConstructionPhase	PhaseStartDate	1/2/2026	1/1/2028
tblConstructionPhase	PhaseStartDate	1/2/2028	1/1/2029
tblConstructionPhase	PhaseStartDate	1/2/2029	1/1/2030
tblConstructionPhase	PhaseStartDate	1/2/2030	1/1/2031
tblConstructionPhase	PhaseStartDate	1/2/2031	1/1/2032
tblConstructionPhase	PhaseStartDate	1/2/2032	1/1/2033
tblConstructionPhase	PhaseStartDate	1/2/2033	1/1/2034
tblConstructionPhase	PhaseStartDate	1/3/2034	1/1/2035
tblConstructionPhase	PhaseStartDate	1/2/2035	1/1/2036
tblConstructionPhase	PhaseStartDate	1/3/2017	1/1/2018
tblConstructionPhase	PhaseStartDate	1/2/2036	1/1/2037
tblConstructionPhase	PhaseStartDate	1/2/2018	1/1/2019
tblConstructionPhase	PhaseStartDate	1/2/2019	1/1/2020
tblConstructionPhase	PhaseStartDate	1/2/2020	1/1/2021
tblConstructionPhase	PhaseStartDate	1/2/2021	1/1/2022
tblConstructionPhase	PhaseStartDate	1/2/2022	1/1/2023
tblConstructionPhase	PhaseStartDate	1/3/2023	1/1/2024
tblConstructionPhase	PhaseStartDate	1/2/2024	1/1/2025
tblLandUse	LotAcreage	0.00	2,100.00
tblOnRoadDust	VendorPercentPave	100.00	0.00
tblOnRoadDust	VendorPercentPave	100.00	0.00
tblOnRoadDust	VendorPercentPave	100.00	0.00
tblOnRoadDust	VendorPercentPave	100.00	0.00

tblOnRoadDust	VendorPercentPave	100.00	0.00
tblOnRoadDust	VendorPercentPave	100.00	0.00
tblOnRoadDust	VendorPercentPave	100.00	0.00
tblOnRoadDust	VendorPercentPave	100.00	0.00
tblOnRoadDust	VendorPercentPave	100.00	0.00
tblOnRoadDust	VendorPercentPave	100.00	0.00
tblOnRoadDust	VendorPercentPave	100.00	0.00
tblOnRoadDust	VendorPercentPave	100.00	0.00
tblOnRoadDust	VendorPercentPave	100.00	0.00
tblOnRoadDust	VendorPercentPave	100.00	0.00
tblOnRoadDust	VendorPercentPave	100.00	0.00
tblOnRoadDust	VendorPercentPave	100.00	0.00
tblOnRoadDust	VendorPercentPave	100.00	0.00
tblOnRoadDust	VendorPercentPave	100.00	0.00
tblOnRoadDust	VendorPercentPave	100.00	0.00
tblOnRoadDust	WorkerPercentPave	100.00	0.00
tblOnRoadDust	WorkerPercentPave	100.00	0.00
tblOnRoadDust	WorkerPercentPave	100.00	0.00
tblOnRoadDust	WorkerPercentPave	100.00	0.00
tblOnRoadDust	WorkerPercentPave	100.00	0.00
tblOnRoadDust	WorkerPercentPave	100.00	0.00
tblOnRoadDust	WorkerPercentPave	100.00	0.00
tblOnRoadDust	WorkerPercentPave	100.00	0.00
tblOnRoadDust	WorkerPercentPave	100.00	0.00
tblOnRoadDust	WorkerPercentPave	100.00	0.00
tblOnRoadDust	WorkerPercentPave	100.00	0.00

tblOnRoadDust	WorkerPercentPave	100.00	0.00
tblOnRoadDust	WorkerPercentPave	100.00	0.00
tblOnRoadDust	WorkerPercentPave	100.00	0.00
tblOnRoadDust	WorkerPercentPave	100.00	0.00
tblOnRoadDust	WorkerPercentPave	100.00	0.00
tblOnRoadDust	WorkerPercentPave	100.00	0.00
tblOnRoadDust	WorkerPercentPave	100.00	0.00
tblOnRoadDust	WorkerPercentPave	100.00	0.00
tblProjectCharacteristics	OperationalYear	2014	2035
tblProjectCharacteristics	UrbanizationLevel	Urban	Rural
tblTripsAndVMT	VendorTripLength	4.60	0.60
tblTripsAndVMT	VendorTripLength	4.60	0.60
tblTripsAndVMT	VendorTripLength	4.60	0.60
tblTripsAndVMT	VendorTripLength	4.60	0.60
tblTripsAndVMT	VendorTripLength	4.60	0.60
tblTripsAndVMT	VendorTripLength	4.60	0.60
tblTripsAndVMT	VendorTripLength	4.60	0.60
tblTripsAndVMT	VendorTripLength	4.60	0.60
tblTripsAndVMT	VendorTripLength	4.60	0.60
tblTripsAndVMT	VendorTripLength	4.60	0.60
tblTripsAndVMT	VendorTripLength	4.60	0.60
tblTripsAndVMT	VendorTripLength	4.60	0.60
tblTripsAndVMT	VendorTripLength	4.60	0.60
tblTripsAndVMT	VendorTripLength	4.60	0.60
tblTripsAndVMT	VendorTripLength	4.60	0.60
tblTripsAndVMT	VendorTripLength	4.60	0.60
tblTripsAndVMT	VendorTripLength	4.60	0.60

tblTripsAndVMT	VendorTripLength	4.60	0.60
tblTripsAndVMT	VendorTripLength	4.60	0.60
tblTripsAndVMT	VendorTripNumber	0.00	211.00
tblTripsAndVMT	VendorTripNumber	0.00	1.00
tblTripsAndVMT	VendorTripNumber	0.00	2.00
tblTripsAndVMT	VendorTripNumber	0.00	2.00
tblTripsAndVMT	VendorTripNumber	0.00	2.00
tblTripsAndVMT	VendorTripNumber	0.00	2.00
tblTripsAndVMT	VendorTripNumber	0.00	1.00
tblTripsAndVMT	VendorTripNumber	0.00	5.00
tblTripsAndVMT	VendorTripNumber	0.00	1,278.00
tblTripsAndVMT	VendorTripNumber	0.00	737.00
tblTripsAndVMT	VendorTripNumber	0.00	8.00
tblTripsAndVMT	VendorTripNumber	0.00	8.00
tblTripsAndVMT	VendorTripNumber	0.00	5.00
tblTripsAndVMT	VendorTripNumber	0.00	470.00
tblTripsAndVMT	VendorTripNumber	0.00	576.00
tblTripsAndVMT	VendorTripNumber	0.00	2.00
tblTripsAndVMT	VendorVehicleClass	HDT_Mix	HHDT
tblTripsAndVMT	VendorVehicleClass	HDT_Mix	HHDT
tblTripsAndVMT	VendorVehicleClass	HDT_Mix	HHDT
tblTripsAndVMT	VendorVehicleClass	HDT_Mix	HHDT
tblTripsAndVMT	VendorVehicleClass	HDT_Mix	HHDT
tblTripsAndVMT	VendorVehicleClass	HDT_Mix	HHDT
tblTripsAndVMT	VendorVehicleClass	HDT_Mix	HHDT
tblTripsAndVMT	VendorVehicleClass	HDT_Mix	HHDT
tblTripsAndVMT	VendorVehicleClass	HDT_Mix	HHDT
tblTripsAndVMT	VendorVehicleClass	HDT_Mix	HHDT

tblTripsAndVMT	VendorVehicleClass	HDT_Mix	HHDT
tblTripsAndVMT	VendorVehicleClass	HDT_Mix	HHDT
tblTripsAndVMT	VendorVehicleClass	HDT_Mix	HHDT
tblTripsAndVMT	VendorVehicleClass	HDT_Mix	HHDT
tblTripsAndVMT	VendorVehicleClass	HDT_Mix	HHDT
tblTripsAndVMT	VendorVehicleClass	HDT_Mix	HHDT
tblTripsAndVMT	VendorVehicleClass	HDT_Mix	HHDT
tblTripsAndVMT	VendorVehicleClass	HDT_Mix	HHDT
tblTripsAndVMT	VendorVehicleClass	HDT_Mix	HHDT
tblTripsAndVMT	VendorVehicleClass	HDT_Mix	HHDT
tblTripsAndVMT	WorkerTripLength	12.30	0.60
tblTripsAndVMT	WorkerTripLength	12.30	0.60
tblTripsAndVMT	WorkerTripLength	12.30	0.60
tblTripsAndVMT	WorkerTripLength	12.30	0.60
tblTripsAndVMT	WorkerTripLength	12.30	0.60
tblTripsAndVMT	WorkerTripLength	12.30	0.60
tblTripsAndVMT	WorkerTripLength	12.30	0.60
tblTripsAndVMT	WorkerTripLength	12.30	0.60
tblTripsAndVMT	WorkerTripLength	12.30	0.60
tblTripsAndVMT	WorkerTripLength	12.30	0.60
tblTripsAndVMT	WorkerTripLength	12.30	0.60
tblTripsAndVMT	WorkerTripLength	12.30	0.60
tblTripsAndVMT	WorkerTripLength	12.30	0.60
tblTripsAndVMT	WorkerTripLength	12.30	0.60
tblTripsAndVMT	WorkerTripLength	12.30	0.60
tblTripsAndVMT	WorkerTripLength	12.30	0.60
tblTripsAndVMT	WorkerTripLength	12.30	0.60

tblTripsAndVMT	WorkerTripLength	12.30	0.60
tblTripsAndVMT	WorkerTripLength	12.30	0.60
tblTripsAndVMT	WorkerTripNumber	0.00	5,967.00
tblTripsAndVMT	WorkerTripNumber	0.00	1,632.00
tblTripsAndVMT	WorkerTripNumber	0.00	1,563.00
tblTripsAndVMT	WorkerTripNumber	0.00	886.00
tblTripsAndVMT	WorkerTripNumber	0.00	2,614.00
tblTripsAndVMT	WorkerTripNumber	0.00	2,967.00
tblTripsAndVMT	WorkerTripNumber	0.00	801.00
tblTripsAndVMT	WorkerTripNumber	0.00	156.00
tblTripsAndVMT	WorkerTripNumber	0.00	1,002.00
tblTripsAndVMT	WorkerTripNumber	0.00	7,513.00
tblTripsAndVMT	WorkerTripNumber	0.00	156.00
tblTripsAndVMT	WorkerTripNumber	0.00	57,047.00
tblTripsAndVMT	WorkerTripNumber	0.00	156.00
tblTripsAndVMT	WorkerTripNumber	0.00	70,561.00
tblTripsAndVMT	WorkerTripNumber	0.00	5,054.00
tblTripsAndVMT	WorkerTripNumber	0.00	4,828.00
tblTripsAndVMT	WorkerTripNumber	0.00	1,732.00
tblTripsAndVMT	WorkerTripNumber	0.00	25,090.00
tblTripsAndVMT	WorkerTripNumber	0.00	35,554.00
tblTripsAndVMT	WorkerTripNumber	0.00	312.00

2.0 Emissions Summary

2.1 Overall Construction

Unmitigated Construction

	ROG	NOx	CO	SO2	Fugitive PM10	Exhaust PM10	PM10 Total	Fugitive PM2.5	Exhaust PM2.5	PM2.5 Total	Bio- CO2	NBio- CO2	Total CO2	CH4	N2O	CO2e
Year	tons/yr										MT/yr					
2017					2.4515			0.2447								
2018					23.1441			2.3099								
2019					28.2920			2.8237								
2020					2.0087			0.2005								
2021					1.9190			0.1915								
2022					0.6893			0.0688								
2023					10.1426			1.0123								
2024					14.3369			1.4309								
2025					0.1246			0.0124								
2026					0.6480			0.0647								
2028					0.6210			0.0620								
2029					0.3524			0.0352								
2030					1.0381			0.1036								
2031					1.1781			0.1176								
2032					0.3182			0.0318								
2033					0.0619			6.1800e-003								
2034					0.3976			0.0397								
2035					2.9832			0.2977								

	ROG	NOx	CO	SO2	Fugitive PM10	Exhaust PM10	PM10 Total	Fugitive PM2.5	Exhaust PM2.5	PM2.5 Total	Bio- CO2	NBio- CO2	Total CO2	CH4	N2O	CO2e
Year	tons/yr										MT/yr					
2036					0.0619			6.1800e-003								
2037					0.0619			6.1800e-003								
Total					**90.8309**			**9.0655**								

2.1 Overall Construction

Mitigated Construction

	ROG	NOx	CO	SO2	Fugitive PM10	Exhaust PM10	PM10 Total	Fugitive PM2.5	Exhaust PM2.5	PM2.5 Total	Bio- CO2	NBio- CO2	Total CO2	CH4	N2O	CO2e
Year	tons/yr										MT/yr					
2017					1.5011			0.1496								
2018					14.1714			1.4127								
2019					17.3235			1.7269								
2020					1.2299			0.1226								
2021					1.1750			0.1171								
2022					0.4220			0.0421								
2023					6.2104			0.6191								
2024					8.7786			0.8751								
2025					0.0763			7.6100e-003								
2026					0.3968			0.0396								

	ROG	NOx	CO	SO2	Fugitive PM10	Exhaust PM10	PM10 Total	Fugitive PM2.5	Exhaust PM2.5	PM2.5 Total	Bio- CO2	NBio- CO2	Total CO2	CH4	N2O	CO2e
Year	tons/yr										MT/yr					
2028					0.3803			0.0379								
2029					0.2158			0.0215								
2030					0.6356			0.0634								
2031					0.7214			0.0719								
2032					0.1949			0.0194								
2033					0.0379			3.7800e-003								
2034					0.2435			0.0243								
2035					1.8267			0.1821								
2036					0.0379			3.7800e-003								
2037					0.0379			3.7800e-003								
Total					**55.6168**			**5.5441**								

	ROG	**NOx**	**CO**	**SO2**	**Fugitive PM10**	**Exhaust PM10**	**PM10 Total**	**Fugitive PM2.5**	**Exhaust PM2.5**	**PM2.5 Total**	**Bio- CO2**	**NBio-CO2**	**Total CO2**	**CH4**	**N20**	**CO2e**
Percent Reduction	**0.00**	**0.00**	**0.00**	**0.00**	**38.77**	**0.00**	**0.00**	**38.84**	**0.00**	**0.00**	**0.00**	**0.00**	**0.00**	**0.00**	**0.00**	**0.00**

2.2 Overall Operational

Unmitigated Operational

	ROG	NOx	CO	SO2	Fugitive PM10	Exhaust PM10	PM10 Total	Fugitive PM2.5	Exhaust PM2.5	PM2.5 Total	Bio- CO2	NBio- CO2	Total CO2	CH4	N2O	CO2e
Category	tons/yr										MT/yr					
Area																
Energy																
Mobile					0.0000			0.0000								
Waste																
Water																
Total					**0.0000**			**0.0000**								

2.2 Overall Operational

Mitigated Operational

	ROG	NOx	CO	SO2	Fugitive PM10	Exhaust PM10	PM10 Total	Fugitive PM2.5	Exhaust PM2.5	PM2.5 Total	Bio- CO2	NBio- CO2	Total CO2	CH4	N2O	CO2e
Category	tons/yr										MT/yr					
Area																
Energy																
Mobile					0.0000			0.0000								
Waste																
Water																
Total					**0.0000**			**0.0000**								

	ROG	**NOx**	**CO**	**SO2**	**Fugitive PM10**	**Exhaust PM10**	**PM10 Total**	**Fugitive PM2.5**	**Exhaust PM2.5**	**PM2.5 Total**	**Bio- CO2**	**NBio-CO2**	**Total CO2**	**CH4**	**N20**	**CO2e**
Percent Reduction	**0.00**	**0.00**	**0.00**	**0.00**	**0.00**	**0.00**	**0.00**	**0.00**	**0.00**	**0.00**	**0.00**	**0.00**	**0.00**	**0.00**	**0.00**	**0.00**

3.0 Construction Detail

Construction Phase

Phase Number	Phase Name	Phase Type	Start Date	End Date	Num Days Week	Num Days	Phase Description
1	-3	Grading	1/1/2017	1/2/2017	6	1	
2	-2	Grading	1/1/2018	1/1/2018	6	1	
3	-1	Grading	1/1/2019	1/1/2019	6	1	
4	1	Grading	1/1/2020	1/1/2020	6	1	
5	2	Grading	1/1/2021	1/1/2021	6	1	
6	3	Grading	1/1/2022	1/1/2022	6	1	
7	4	Grading	1/1/2023	1/2/2023	6	1	
8	5	Grading	1/1/2024	1/1/2024	6	1	
9	6	Grading	1/1/2025	1/1/2025	6	1	
10	7	Grading	1/1/2026	1/1/2026	6	1	
11	9	Grading	1/1/2028	1/1/2028	6	1	
12	10	Grading	1/1/2029	1/1/2029	6	1	
13	11	Grading	1/1/2030	1/1/2030	6	1	
14	12	Grading	1/1/2031	1/1/2031	6	1	
15	13	Grading	1/1/2032	1/1/2032	6	1	
16	14	Grading	1/1/2033	1/1/2033	6	1	
17	15	Grading	1/1/2034	1/2/2034	6	1	
18	16	Grading	1/1/2035	1/1/2035	6	1	
19	17	Grading	1/1/2036	1/1/2036	6	1	
20	18	Grading	1/1/2037	1/1/2037	6	1	

Acres of Grading (Site Preparation Phase): 0

Acres of Grading (Grading Phase): 0

Acres of Paving: 0

Residential Indoor: 0; Residential Outdoor: 0; Non-Residential Indoor: 0; Non-Residential Outdoor: 0 (Architectural Coating – sqft)

OffRoad Equipment

Phase Name	Offroad Equipment Type	Amount	Usage Hours	Horse Power	Load Factor

Trips and VMT

Phase Name	Offroad Equipment Count	Worker Trip Number	Vendor Trip Number	Hauling Trip Number	Worker Trip Length	Vendor Trip Length	Hauling Trip Length	Worker Vehicle Class	Vendor Vehicle Class	Hauling Vehicle Class
-3	0	5,967.00	211.00	0.00	0.60	0.60		LD_Mix	HHDT	
7	0	1,632.00	1.00	0.00	0.60	0.60		LD_Mix	HHDT	
9	0	1,563.00	2.00	0.00	0.60	0.60		LD_Mix	HHDT	
10	0	886.00	2.00	0.00	0.60	0.60		LD_Mix	HHDT	
11	0	2,614.00	2.00	0.00	0.60	0.60		LD_Mix	HHDT	
12	0	2,967.00	2.00	0.00	0.60	0.60		LD_Mix	HHDT	
13	0	801.00	1.00	0.00	0.60	0.60		LD_Mix	HHDT	
14	0	156.00	0.00	0.00	0.60	0.60		LD_Mix	HHDT	
15	0	1,002.00	0.00	0.00	0.60	0.60		LD_Mix	HHDT	
16	0	7,513.00	5.00	0.00	0.60	0.60		LD_Mix	HHDT	
17	0	156.00	0.00	0.00	0.60	0.60		LD_Mix	HHDT	
-2	0	57,047.00	1,278.00	0.00	0.60	0.60		LD_Mix	HHDT	
18	0	156.00	0.00	0.00	0.60	0.60		LD_Mix	HHDT	
-1	0	70,561.00	737.00	0.00	0.60	0.60		LD_Mix	HHDT	
1	0	5,054.00	8.00	0.00	0.60	0.60		LD_Mix	HHDT	
2	0	4,828.00	8.00	0.00	0.60	0.60		LD_Mix	HHDT	
3	0	1,732.00	5.00	0.00	0.60	0.60		LD_Mix	HHDT	
4	0	25,090.00	470.00	0.00	0.60	0.60		LD_Mix	HHDT	
5	0	35,554.00	576.00	0.00	0.60	0.60		LD_Mix	HHDT	
6	0	312.00	2.00	0.00	0.60	0.60		LD_Mix	HHDT	

3.1 Mitigation Measures Construction

Water Exposed Area

Reduce Vehicle Speed on Unpaved Roads

Clean Paved Roads

3.2 -3 - 2017

Unmitigated Construction On-Site

	ROG	NOx	CO	SO2	Fugitive PM10	Exhaust PM10	PM10 Total	Fugitive PM2.5	Exhaust PM2.5	PM2.5 Total	Bio- CO2	NBio- CO2	Total CO2	CH4	N2O	CO2e
Category	tons/yr										MT/yr					
Fugitive Dust					0.0000			0.0000								
Total					**0.0000**			**0.0000**								

3.2 -3 - 2017

Unmitigated Construction Off-Site

	ROG	NOx	CO	SO2	Fugitive PM10	Exhaust PM10	PM10 Total	Fugitive PM2.5	Exhaust PM2.5	PM2.5 Total	Bio- CO2	NBio- CO2	Total CO2	CH4	N2O	CO2e
Category	tons/yr										MT/yr					
Hauling					0.0000			0.0000								
Vendor					0.0837			8.3600e-003								
Worker					2.3678			0.2363								
Total					**2.4515**			**0.2447**								

Mitigated Construction On-Site

	ROG	NOx	CO	SO2	Fugitive PM10	Exhaust PM10	PM10 Total	Fugitive PM2.5	Exhaust PM2.5	PM2.5 Total	Bio- CO2	NBio- CO2	Total CO2	CH4	N2O	CO2e
Category	tons/yr										MT/yr					
Fugitive Dust					0.0000			0.0000								
Total					**0.0000**			**0.0000**								

3.2 -3 - 2017

Mitigated Construction Off-Site

	ROG	NOx	CO	SO2	Fugitive PM10	Exhaust PM10	PM10 Total	Fugitive PM2.5	Exhaust PM2.5	PM2.5 Total	Bio- CO2	NBio- CO2	Total CO2	CH4	N2O	CO2e
Category	tons/yr										MT/yr					
Hauling					0.0000			0.0000								
Vendor					0.0513			5.1100e-003								
Worker					1.4498			0.1445								
Total					**1.5011**			**0.1496**								

3.3 -2 - 2018

Unmitigated Construction On-Site

	ROG	NOx	CO	SO2	Fugitive PM10	Exhaust PM10	PM10 Total	Fugitive PM2.5	Exhaust PM2.5	PM2.5 Total	Bio- CO2	NBio- CO2	Total CO2	CH4	N2O	CO2e
Category	tons/yr										MT/yr					
Fugitive Dust					0.0000			0.0000								
Total					**0.0000**			**0.0000**								

3.3 -2 - 2018

Unmitigated Construction Off-Site

	ROG	NOx	CO	SO2	Fugitive PM10	Exhaust PM10	PM10 Total	Fugitive PM2.5	Exhaust PM2.5	PM2.5 Total	Bio- CO2	NBio- CO2	Total CO2	CH4	N2O	CO2e
Category	tons/yr										MT/yr					
Hauling					0.0000			0.0000								
Vendor					0.5072			0.0506								
Worker					22.6370			2.2593								
Total					**23.1441**			**2.3099**								

Mitigated Construction On-Site

	ROG	NOx	CO	SO2	Fugitive PM10	Exhaust PM10	PM10 Total	Fugitive PM2.5	Exhaust PM2.5	PM2.5 Total	Bio- CO2	NBio- CO2	Total CO2	CH4	N2O	CO2e
Category	tons/yr										MT/yr					
Fugitive Dust					0.0000			0.0000								
Total					**0.0000**			**0.0000**								

3.3 -2 - 2018

Mitigated Construction Off-Site

	ROG	NOx	CO	SO2	Fugitive PM10	Exhaust PM10	PM10 Total	Fugitive PM2.5	Exhaust PM2.5	PM2.5 Total	Bio- CO2	NBio- CO2	Total CO2	CH4	N2O	CO2e
Category	tons/yr										MT/yr					
Hauling					0.0000			0.0000								
Vendor					0.3106			0.0310								
Worker					13.8609			1.3817								
Total					**14.1714**			**1.4127**								

3.4 -1 - 2019

Unmitigated Construction On-Site

	ROG	NOx	CO	SO2	Fugitive PM10	Exhaust PM10	PM10 Total	Fugitive PM2.5	Exhaust PM2.5	PM2.5 Total	Bio- CO2	NBio- CO2	Total CO2	CH4	N2O	CO2e
Category	tons/yr										MT/yr					
Fugitive Dust					0.0000			0.0000								
Total					**0.0000**			**0.0000**								

3.4 -1 - 2019

Unmitigated Construction Off-Site

	ROG	NOx	CO	SO2	Fugitive PM10	Exhaust PM10	PM10 Total	Fugitive PM2.5	Exhaust PM2.5	PM2.5 Total	Bio- CO2	NBio- CO2	Total CO2	CH4	N2O	CO2e
Category	tons/yr										MT/yr					
Hauling					0.0000			0.0000								
Vendor					0.2925			0.0292								
Worker					27.9995			2.7945								
Total					**28.2920**			**2.8237**								

Mitigated Construction On-Site

	ROG	NOx	CO	SO2	Fugitive PM10	Exhaust PM10	PM10 Total	Fugitive PM2.5	Exhaust PM2.5	PM2.5 Total	Bio- CO2	NBio- CO2	Total CO2	CH4	N2O	CO2e
Category	tons/yr										MT/yr					
Fugitive Dust					0.0000			0.0000								
Total					**0.0000**			**0.0000**								

3.4 -1 - 2019

Mitigated Construction Off-Site

	ROG	NOx	CO	SO2	Fugitive PM10	Exhaust PM10	PM10 Total	Fugitive PM2.5	Exhaust PM2.5	PM2.5 Total	Bio- CO2	NBio- CO2	Total CO2	CH4	N2O	CO2e
Category	tons/yr										MT/yr					
Hauling					0.0000			0.0000								
Vendor					0.1791			0.0179								
Worker					17.1444			1.7090								
Total					**17.3235**			**1.7269**								

3.5 1 - 2020

Unmitigated Construction On-Site

	ROG	NOx	CO	SO2	Fugitive PM10	Exhaust PM10	PM10 Total	Fugitive PM2.5	Exhaust PM2.5	PM2.5 Total	Bio- CO2	NBio- CO2	Total CO2	CH4	N2O	CO2e
Category	tons/yr										MT/yr					
Fugitive Dust					0.0000			0.0000								
Total					**0.0000**			**0.0000**								

3.5 1 - 2020

Unmitigated Construction Off-Site

	ROG	NOx	CO	SO2	Fugitive PM10	Exhaust PM10	PM10 Total	Fugitive PM2.5	Exhaust PM2.5	PM2.5 Total	Bio- CO2	NBio- CO2	Total CO2	CH4	N2O	CO2e
Category	tons/yr										MT/yr					
Hauling					0.0000			0.0000								
Vendor					3.1700e-003			3.2000e-004								
Worker					2.0055			0.2002								
Total					**2.0087**			**0.2005**								

Mitigated Construction On-Site

	ROG	NOx	CO	SO2	Fugitive PM10	Exhaust PM10	PM10 Total	Fugitive PM2.5	Exhaust PM2.5	PM2.5 Total	Bio- CO2	NBio- CO2	Total CO2	CH4	N2O	CO2e
Category	tons/yr										MT/yr					
Fugitive Dust					0.0000			0.0000								
Total					**0.0000**			**0.0000**								

3.5 1 - 2020

Mitigated Construction Off-Site

	ROG	NOx	CO	SO2	Fugitive PM10	Exhaust PM10	PM10 Total	Fugitive PM2.5	Exhaust PM2.5	PM2.5 Total	Bio- CO2	NBio- CO2	Total CO2	CH4	N2O	CO2e
Category	tons/yr										MT/yr					
Hauling					0.0000			0.0000								
Vendor					1.9400e-003			1.9000e-004								
Worker					1.2280			0.1224								
Total					**1.2299**			**0.1226**								

3.6 2 - 2021

Unmitigated Construction On-Site

	ROG	NOx	CO	SO2	Fugitive PM10	Exhaust PM10	PM10 Total	Fugitive PM2.5	Exhaust PM2.5	PM2.5 Total	Bio- CO2	NBio- CO2	Total CO2	CH4	N2O	CO2e
Category	tons/yr										MT/yr					
Fugitive Dust					0.0000			0.0000								
Total					**0.0000**			**0.0000**								

3.6 2 - 2021

Unmitigated Construction Off-Site

	ROG	NOx	CO	SO2	Fugitive PM10	Exhaust PM10	PM10 Total	Fugitive PM2.5	Exhaust PM2.5	PM2.5 Total	Bio- CO2	NBio- CO2	Total CO2	CH4	N2O	CO2e
Category	tons/yr										MT/yr					
Hauling					0.0000			0.0000								
Vendor					3.1700e-003			3.2000e-004								
Worker					1.9158			0.1912								
Total					**1.9190**			**0.1915**								

Mitigated Construction On-Site

	ROG	NOx	CO	SO2	Fugitive PM10	Exhaust PM10	PM10 Total	Fugitive PM2.5	Exhaust PM2.5	PM2.5 Total	Bio- CO2	NBio- CO2	Total CO2	CH4	N2O	CO2e
Category	tons/yr										MT/yr					
Fugitive Dust					0.0000			0.0000								
Total					**0.0000**			**0.0000**								

3.6 2 - 2021

Mitigated Construction Off-Site

	ROG	NOx	CO	SO2	Fugitive PM10	Exhaust PM10	PM10 Total	Fugitive PM2.5	Exhaust PM2.5	PM2.5 Total	Bio- CO2	NBio- CO2	Total CO2	CH4	N2O	CO2e
Category	tons/yr										MT/yr					
Hauling					0.0000			0.0000								
Vendor					1.9400e-003			1.9000e-004								
Worker					1.1731			0.1169								
Total					**1.1750**			**0.1171**								

3.7 3 - 2022

Unmitigated Construction On-Site

	ROG	NOx	CO	SO2	Fugitive PM10	Exhaust PM10	PM10 Total	Fugitive PM2.5	Exhaust PM2.5	PM2.5 Total	Bio- CO2	NBio- CO2	Total CO2	CH4	N2O	CO2e
Category	tons/yr										MT/yr					
Fugitive Dust					0.0000			0.0000								
Total					**0.0000**			**0.0000**								

3.7 3 - 2022

Unmitigated Construction Off-Site

	ROG	NOx	CO	SO2	Fugitive PM10	Exhaust PM10	PM10 Total	Fugitive PM2.5	Exhaust PM2.5	PM2.5 Total	Bio- CO2	NBio- CO2	Total CO2	CH4	N2O	CO2e
Category	tons/yr										MT/yr					
Hauling					0.0000			0.0000								
Vendor					1.9800e-003			2.0000e-004								
Worker					0.6873			0.0686								
Total					**0.6893**			**0.0688**								

Mitigated Construction On-Site

	ROG	NOx	CO	SO2	Fugitive PM10	Exhaust PM10	PM10 Total	Fugitive PM2.5	Exhaust PM2.5	PM2.5 Total	Bio- CO2	NBio- CO2	Total CO2	CH4	N2O	CO2e
Category	tons/yr										MT/yr					
Fugitive Dust					0.0000			0.0000								
Total					**0.0000**			**0.0000**								

3.7 3 - 2022

Mitigated Construction Off-Site

	ROG	NOx	CO	SO2	Fugitive PM10	Exhaust PM10	PM10 Total	Fugitive PM2.5	Exhaust PM2.5	PM2.5 Total	Bio- CO2	NBio- CO2	Total CO2	CH4	N2O	CO2e
Category	tons/yr										MT/yr					
Hauling					0.0000			0.0000								
Vendor					1.2200e-003			1.2000e-004								
Worker					0.4208			0.0420								
Total					**0.4221**			**0.0421**								

3.8 4 - 2023

Unmitigated Construction On-Site

	ROG	NOx	CO	SO2	Fugitive PM10	Exhaust PM10	PM10 Total	Fugitive PM2.5	Exhaust PM2.5	PM2.5 Total	Bio- CO2	NBio- CO2	Total CO2	CH4	N2O	CO2e
Category	tons/yr										MT/yr					
Fugitive Dust					0.0000			0.0000								
Total					**0.0000**			**0.0000**								

3.8 4 - 2023

Unmitigated Construction Off-Site

	ROG	NOx	CO	SO2	Fugitive PM10	Exhaust PM10	PM10 Total	Fugitive PM2.5	Exhaust PM2.5	PM2.5 Total	Bio- CO2	NBio- CO2	Total CO2	CH4	N2O	CO2e
Category	tons/yr										MT/yr					
Hauling					0.0000			0.0000								
Vendor					0.1865			0.0186								
Worker					9.9560			0.9937								
Total					**10.1426**			**1.0123**								

Mitigated Construction On-Site

	ROG	NOx	CO	SO2	Fugitive PM10	Exhaust PM10	PM10 Total	Fugitive PM2.5	Exhaust PM2.5	PM2.5 Total	Bio- CO2	NBio- CO2	Total CO2	CH4	N2O	CO2e
Category	tons/yr										MT/yr					
Fugitive Dust					0.0000			0.0000								
Total					**0.0000**			**0.0000**								

3.8 4 - 2023

Mitigated Construction Off-Site

	ROG	NOx	CO	SO2	Fugitive PM10	Exhaust PM10	PM10 Total	Fugitive PM2.5	Exhaust PM2.5	PM2.5 Total	Bio- CO2	NBio- CO2	Total CO2	CH4	N2O	CO2e
Category	tons/yr										MT/yr					
Hauling					0.0000			0.0000								
Vendor					0.1142			0.0114								
Worker					6.0962			0.6077								
Total					**6.2104**			**0.6191**								

3.9 5 - 2024

Unmitigated Construction On-Site

	ROG	NOx	CO	SO2	Fugitive PM10	Exhaust PM10	PM10 Total	Fugitive PM2.5	Exhaust PM2.5	PM2.5 Total	Bio- CO2	NBio- CO2	Total CO2	CH4	N2O	CO2e
Category	tons/yr										MT/yr					
Fugitive Dust					0.0000			0.0000								
Total					**0.0000**			**0.0000**								

3.9 5 - 2024

Unmitigated Construction Off-Site

	ROG	NOx	CO	SO2	Fugitive PM10	Exhaust PM10	PM10 Total	Fugitive PM2.5	Exhaust PM2.5	PM2.5 Total	Bio- CO2	NBio- CO2	Total CO2	CH4	N2O	CO2e
Category	tons/yr										MT/yr					
Hauling					0.0000			0.0000								
Vendor					0.2286			0.0228								
Worker					14.1083			1.4081								
Total					**14.3369**			**1.4309**								

Mitigated Construction On-Site

	ROG	NOx	CO	SO2	Fugitive PM10	Exhaust PM10	PM10 Total	Fugitive PM2.5	Exhaust PM2.5	PM2.5 Total	Bio- CO2	NBio- CO2	Total CO2	CH4	N2O	CO2e
Category	tons/yr										MT/yr					
Fugitive Dust					0.0000			0.0000								
Total					**0.0000**			**0.0000**								

3.9 5 - 2024

Mitigated Construction Off-Site

	ROG	NOx	CO	SO2	Fugitive PM10	Exhaust PM10	PM10 Total	Fugitive PM2.5	Exhaust PM2.5	PM2.5 Total	Bio- CO2	NBio- CO2	Total CO2	CH4	N2O	CO2e
Category	tons/yr										MT/yr					
Hauling					0.0000			0.0000								
Vendor					0.1400			0.0140								
Worker					8.6387			0.8611								
Total					**8.7786**			**0.8751**								

3.10 6 - 2025

Unmitigated Construction On-Site

	ROG	NOx	CO	SO2	Fugitive PM10	Exhaust PM10	PM10 Total	Fugitive PM2.5	Exhaust PM2.5	PM2.5 Total	Bio- CO2	NBio- CO2	Total CO2	CH4	N2O	CO2e
Category	tons/yr										MT/yr					
Fugitive Dust					0.0000			0.0000								
Total					**0.0000**			**0.0000**								

3.10 6 - 2025

Unmitigated Construction Off-Site

	ROG	NOx	CO	SO2	Fugitive PM10	Exhaust PM10	PM10 Total	Fugitive PM2.5	Exhaust PM2.5	PM2.5 Total	Bio- CO2	NBio- CO2	Total CO2	CH4	N2O	CO2e
Category	tons/yr										MT/yr					
Hauling					0.0000			0.0000								
Vendor					7.9000e-004			8.0000e-005								
Worker					0.1238			0.0124								
Total					**0.1246**			**0.0124**								

Mitigated Construction On-Site

	ROG	NOx	CO	SO2	Fugitive PM10	Exhaust PM10	PM10 Total	Fugitive PM2.5	Exhaust PM2.5	PM2.5 Total	Bio- CO2	NBio- CO2	Total CO2	CH4	N2O	CO2e
Category	tons/yr										MT/yr					
Fugitive Dust					0.0000			0.0000								
Total					**0.0000**			**0.0000**								

3.10 6 - 2025

Mitigated Construction Off-Site

	ROG	NOx	CO	SO2	Fugitive PM10	Exhaust PM10	PM10 Total	Fugitive PM2.5	Exhaust PM2.5	PM2.5 Total	Bio- CO2	NBio- CO2	Total CO2	CH4	N2O	CO2e
Category	tons/yr										MT/yr					
Hauling					0.0000			0.0000								
Vendor					4.9000e-004			5.0000e-005								
Worker					0.0758			7.5600e-003								
Total					**0.0763**			**7.6100e-003**								

3.11 7 - 2026

Unmitigated Construction On-Site

	ROG	NOx	CO	SO2	Fugitive PM10	Exhaust PM10	PM10 Total	Fugitive PM2.5	Exhaust PM2.5	PM2.5 Total	Bio- CO2	NBio- CO2	Total CO2	CH4	N2O	CO2e
Category	tons/yr										MT/yr					
Fugitive Dust					0.0000			0.0000								
Total					**0.0000**			**0.0000**								

3.11 7 - 2026

Unmitigated Construction Off-Site

	ROG	NOx	CO	SO2	Fugitive PM10	Exhaust PM10	PM10 Total	Fugitive PM2.5	Exhaust PM2.5	PM2.5 Total	Bio- CO2	NBio- CO2	Total CO2	CH4	N2O	CO2e
Category	tons/yr										MT/yr					
Hauling					0.0000			0.0000								
Vendor					4.0000e-004			4.0000e-005								
Worker					0.6476			0.0646								
Total					**0.6480**			**0.0647**								

Mitigated Construction On-Site

	ROG	NOx	CO	SO2	Fugitive PM10	Exhaust PM10	PM10 Total	Fugitive PM2.5	Exhaust PM2.5	PM2.5 Total	Bio- CO2	NBio- CO2	Total CO2	CH4	N2O	CO2e
Category	tons/yr										MT/yr					
Fugitive Dust					0.0000			0.0000								
Total					**0.0000**			**0.0000**								

3.11 7 - 2026

Mitigated Construction Off-Site

	ROG	NOx	CO	SO2	Fugitive PM10	Exhaust PM10	PM10 Total	Fugitive PM2.5	Exhaust PM2.5	PM2.5 Total	Bio- CO2	NBio- CO2	Total CO2	CH4	N2O	CO2e
Category	tons/yr										MT/yr					
Hauling					0.0000			0.0000								
Vendor					2.4000e-004			2.0000e-005								
Worker					0.3965			0.0395								
Total					**0.3968**			**0.0396**								

3.12 9 - 2028

Unmitigated Construction On-Site

	ROG	NOx	CO	SO2	Fugitive PM10	Exhaust PM10	PM10 Total	Fugitive PM2.5	Exhaust PM2.5	PM2.5 Total	Bio- CO2	NBio- CO2	Total CO2	CH4	N2O	CO2e
Category	tons/yr										MT/yr					
Fugitive Dust					0.0000			0.0000								
Total					**0.0000**			**0.0000**								

3.12 9 - 2028

Unmitigated Construction Off-Site

	ROG	NOx	CO	SO2	Fugitive PM10	Exhaust PM10	PM10 Total	Fugitive PM2.5	Exhaust PM2.5	PM2.5 Total	Bio- CO2	NBio- CO2	Total CO2	CH4	N2O	CO2e
Category	tons/yr										MT/yr					
Hauling					0.0000			0.0000								
Vendor					7.9000e-004			8.0000e-005								
Worker					0.6202			0.0619								
Total					**0.6210**			**0.0620**								

Mitigated Construction On-Site

	ROG	NOx	CO	SO2	Fugitive PM10	Exhaust PM10	PM10 Total	Fugitive PM2.5	Exhaust PM2.5	PM2.5 Total	Bio- CO2	NBio- CO2	Total CO2	CH4	N2O	CO2e
Category	tons/yr										MT/yr					
Fugitive Dust					0.0000			0.0000								
Total					**0.0000**			**0.0000**								

3.12 9 - 2028

Mitigated Construction Off-Site

	ROG	NOx	CO	SO2	Fugitive PM10	Exhaust PM10	PM10 Total	Fugitive PM2.5	Exhaust PM2.5	PM2.5 Total	Bio- CO2	NBio- CO2	Total CO2	CH4	N2O	CO2e
Category	tons/yr										MT/yr					
Hauling					0.0000			0.0000								
Vendor					4.9000e-004			5.0000e-005								
Worker					0.3798			0.0379								
Total					**0.3803**			**0.0379**								

3.13 10 - 2029

Unmitigated Construction On-Site

	ROG	NOx	CO	SO2	Fugitive PM10	Exhaust PM10	PM10 Total	Fugitive PM2.5	Exhaust PM2.5	PM2.5 Total	Bio- CO2	NBio- CO2	Total CO2	CH4	N2O	CO2e
Category	tons/yr										MT/yr					
Fugitive Dust					0.0000			0.0000								
Total					**0.0000**			**0.0000**								

3.13 10 - 2029

Unmitigated Construction Off-Site

	ROG	NOx	CO	SO2	Fugitive PM10	Exhaust PM10	PM10 Total	Fugitive PM2.5	Exhaust PM2.5	PM2.5 Total	Bio- CO2	NBio- CO2	Total CO2	CH4	N2O	CO2e
Category	tons/yr										MT/yr					
Hauling					0.0000			0.0000								
Vendor					7.9000e-004			8.0000e-005								
Worker					0.3516			0.0351								
Total					**0.3524**			**0.0352**								

Mitigated Construction On-Site

	ROG	NOx	CO	SO2	Fugitive PM10	Exhaust PM10	PM10 Total	Fugitive PM2.5	Exhaust PM2.5	PM2.5 Total	Bio- CO2	NBio- CO2	Total CO2	CH4	N2O	CO2e
Category	tons/yr										MT/yr					
Fugitive Dust					0.0000			0.0000								
Total					**0.0000**			**0.0000**								

3.13 10 - 2029

Mitigated Construction Off-Site

	ROG	NOx	CO	SO2	Fugitive PM10	Exhaust PM10	PM10 Total	Fugitive PM2.5	Exhaust PM2.5	PM2.5 Total	Bio- CO2	NBio- CO2	Total CO2	CH4	N2O	CO2e
Category	tons/yr										MT/yr					
Hauling					0.0000			0.0000								
Vendor					4.9000e-004			5.0000e-005								
Worker					0.2153			0.0215								
Total					**0.2158**			**0.0215**								

3.14 11 - 2030

Unmitigated Construction On-Site

	ROG	NOx	CO	SO2	Fugitive PM10	Exhaust PM10	PM10 Total	Fugitive PM2.5	Exhaust PM2.5	PM2.5 Total	Bio- CO2	NBio- CO2	Total CO2	CH4	N2O	CO2e
Category	tons/yr										MT/yr					
Fugitive Dust					0.0000			0.0000								
Total					**0.0000**			**0.0000**								

3.14 11 - 2030

Unmitigated Construction Off-Site

	ROG	NOx	CO	SO2	Fugitive PM10	Exhaust PM10	PM10 Total	Fugitive PM2.5	Exhaust PM2.5	PM2.5 Total	Bio- CO2	NBio- CO2	Total CO2	CH4	N2O	CO2e
Category	tons/yr										MT/yr					
Hauling					0.0000			0.0000								
Vendor					7.9000e-004			8.0000e-005								
Worker					1.0373			0.1035								
Total					**1.0381**			**0.1036**								

Mitigated Construction On-Site

	ROG	NOx	CO	SO2	Fugitive PM10	Exhaust PM10	PM10 Total	Fugitive PM2.5	Exhaust PM2.5	PM2.5 Total	Bio- CO2	NBio- CO2	Total CO2	CH4	N2O	CO2e
Category	tons/yr										MT/yr					
Fugitive Dust					0.0000			0.0000								
Total					**0.0000**			**0.0000**								

3.14 11 - 2030

Mitigated Construction Off-Site

	ROG	NOx	CO	SO2	Fugitive PM10	Exhaust PM10	PM10 Total	Fugitive PM2.5	Exhaust PM2.5	PM2.5 Total	Bio- CO2	NBio- CO2	Total CO2	CH4	N2O	CO2e
Category	tons/yr										MT/yr					
Hauling					0.0000			0.0000								
Vendor					4.9000e-004			5.0000e-005								
Worker					0.6351			0.0633								
Total					**0.6356**			**0.0634**								

3.15 12 - 2031

Unmitigated Construction On-Site

	ROG	NOx	CO	SO2	Fugitive PM10	Exhaust PM10	PM10 Total	Fugitive PM2.5	Exhaust PM2.5	PM2.5 Total	Bio- CO2	NBio- CO2	Total CO2	CH4	N2O	CO2e
Category	tons/yr										MT/yr					
Fugitive Dust					0.0000			0.0000								
Total					**0.0000**			**0.0000**								

3.15 12 - 2031

Unmitigated Construction Off-Site

	ROG	NOx	CO	SO2	Fugitive PM10	Exhaust PM10	PM10 Total	Fugitive PM2.5	Exhaust PM2.5	PM2.5 Total	Bio- CO2	NBio- CO2	Total CO2	CH4	N2O	CO2e
Category	tons/yr										MT/yr					
Hauling					0.0000			0.0000								
Vendor					7.9000e-004			8.0000e-005								
Worker					1.1773			0.1175								
Total					**1.1781**			**0.1176**								

Mitigated Construction On-Site

	ROG	NOx	CO	SO2	Fugitive PM10	Exhaust PM10	PM10 Total	Fugitive PM2.5	Exhaust PM2.5	PM2.5 Total	Bio- CO2	NBio- CO2	Total CO2	CH4	N2O	CO2e
Category	tons/yr										MT/yr					
Fugitive Dust					0.0000			0.0000								
Total					**0.0000**			**0.0000**								

3.15 12 - 2031

Mitigated Construction Off-Site

	ROG	NOx	CO	SO2	Fugitive PM10	Exhaust PM10	PM10 Total	Fugitive PM2.5	Exhaust PM2.5	PM2.5 Total	Bio- CO2	NBio- CO2	Total CO2	CH4	N2O	CO2e
Category	tons/yr										MT/yr					
Hauling					0.0000			0.0000								
Vendor					4.9000e-004			5.0000e-005								
Worker					0.7209			0.0719								
Total					**0.7214**			**0.0719**								

3.16 13 - 2032

Unmitigated Construction On-Site

	ROG	NOx	CO	SO2	Fugitive PM10	Exhaust PM10	PM10 Total	Fugitive PM2.5	Exhaust PM2.5	PM2.5 Total	Bio- CO2	NBio- CO2	Total CO2	CH4	N2O	CO2e
Category	tons/yr										MT/yr					
Fugitive Dust					0.0000			0.0000								
Total					**0.0000**			**0.0000**								

3.16 13 - 2032

Unmitigated Construction Off-Site

	ROG	NOx	CO	SO2	Fugitive PM10	Exhaust PM10	PM10 Total	Fugitive PM2.5	Exhaust PM2.5	PM2.5 Total	Bio- CO2	NBio- CO2	Total CO2	CH4	N2O	CO2e
Category	tons/yr										MT/yr					
Hauling					0.0000			0.0000								
Vendor					4.0000e-004			4.0000e-005								
Worker					0.3179			0.0317								
Total					**0.3183**			**0.0318**								

Mitigated Construction On-Site

	ROG	NOx	CO	SO2	Fugitive PM10	Exhaust PM10	PM10 Total	Fugitive PM2.5	Exhaust PM2.5	PM2.5 Total	Bio- CO2	NBio- CO2	Total CO2	CH4	N2O	CO2e
Category	tons/yr										MT/yr					
Fugitive Dust					0.0000			0.0000								
Total					**0.0000**			**0.0000**								

3.16 13 - 2032

Mitigated Construction Off-Site

	ROG	NOx	CO	SO2	Fugitive PM10	Exhaust PM10	PM10 Total	Fugitive PM2.5	Exhaust PM2.5	PM2.5 Total	Bio- CO2	NBio- CO2	Total CO2	CH4	N2O	CO2e
Category	tons/yr										MT/yr					
Hauling					0.0000			0.0000								
Vendor					2.4000e-004			2.0000e-005								
Worker					0.1946			0.0194								
Total					**0.1949**			**0.0194**								

3.17 14 - 2033

Unmitigated Construction On-Site

	ROG	NOx	CO	SO2	Fugitive PM10	Exhaust PM10	PM10 Total	Fugitive PM2.5	Exhaust PM2.5	PM2.5 Total	Bio- CO2	NBio- CO2	Total CO2	CH4	N2O	CO2e
Category	tons/yr										MT/yr					
Fugitive Dust					0.0000			0.0000								
Total					**0.0000**			**0.0000**								

3.17 14 - 2033

Unmitigated Construction Off-Site

	ROG	NOx	CO	SO2	Fugitive PM10	Exhaust PM10	PM10 Total	Fugitive PM2.5	Exhaust PM2.5	PM2.5 Total	Bio- CO2	NBio- CO2	Total CO2	CH4	N2O	CO2e
Category	tons/yr										MT/yr					
Hauling					0.0000			0.0000								
Vendor					0.0000			0.0000								
Worker					0.0619			6.1800e-003								
Total					**0.0619**			**6.1800e-003**								

Mitigated Construction On-Site

	ROG	NOx	CO	SO2	Fugitive PM10	Exhaust PM10	PM10 Total	Fugitive PM2.5	Exhaust PM2.5	PM2.5 Total	Bio- CO2	NBio- CO2	Total CO2	CH4	N2O	CO2e
Category	tons/yr										MT/yr					
Fugitive Dust					0.0000			0.0000								
Total					**0.0000**			**0.0000**								

3.17 14 - 2033

Mitigated Construction Off-Site

	ROG	NOx	CO	SO2	Fugitive PM10	Exhaust PM10	PM10 Total	Fugitive PM2.5	Exhaust PM2.5	PM2.5 Total	Bio- CO2	NBio- CO2	Total CO2	CH4	N2O	CO2e
Category	tons/yr										MT/yr					
Hauling					0.0000			0.0000								
Vendor					0.0000			0.0000								
Worker					0.0379			3.7800e-003								
Total					**0.0379**			**3.7800e-003**								

3.18 15 - 2034

Unmitigated Construction On-Site

	ROG	NOx	CO	SO2	Fugitive PM10	Exhaust PM10	PM10 Total	Fugitive PM2.5	Exhaust PM2.5	PM2.5 Total	Bio- CO2	NBio- CO2	Total CO2	CH4	N2O	CO2e
Category	tons/yr										MT/yr					
Fugitive Dust					0.0000			0.0000								
Total					**0.0000**			**0.0000**								

3.18 15 - 2034

Unmitigated Construction Off-Site

	ROG	NOx	CO	SO2	Fugitive PM10	Exhaust PM10	PM10 Total	Fugitive PM2.5	Exhaust PM2.5	PM2.5 Total	Bio- CO2	NBio- CO2	Total CO2	CH4	N2O	CO2e
Category	tons/yr										MT/yr					
Hauling					0.0000			0.0000								
Vendor					0.0000			0.0000								
Worker					0.3976			0.0397								
Total					**0.3976**			**0.0397**								

Mitigated Construction On-Site

	ROG	NOx	CO	SO2	Fugitive PM10	Exhaust PM10	PM10 Total	Fugitive PM2.5	Exhaust PM2.5	PM2.5 Total	Bio- CO2	NBio- CO2	Total CO2	CH4	N2O	CO2e
Category	tons/yr										MT/yr					
Fugitive Dust					0.0000			0.0000								
Total					**0.0000**			**0.0000**								

3.18 15 - 2034

Mitigated Construction Off-Site

	ROG	NOx	CO	SO2	Fugitive PM10	Exhaust PM10	PM10 Total	Fugitive PM2.5	Exhaust PM2.5	PM2.5 Total	Bio- CO2	NBio- CO2	Total CO2	CH4	N2O	CO2e
Category	tons/yr										MT/yr					
Hauling					0.0000			0.0000								
Vendor					0.0000			0.0000								
Worker					0.2435			0.0243								
Total					**0.2435**			**0.0243**								

3.19 16 - 2035

Unmitigated Construction On-Site

	ROG	NOx	CO	SO2	Fugitive PM10	Exhaust PM10	PM10 Total	Fugitive PM2.5	Exhaust PM2.5	PM2.5 Total	Bio- CO2	NBio- CO2	Total CO2	CH4	N2O	CO2e
Category	tons/yr										MT/yr					
Fugitive Dust					0.0000			0.0000								
Total					**0.0000**			**0.0000**								

3.19 16 - 2035

Unmitigated Construction Off-Site

	ROG	NOx	CO	SO2	Fugitive PM10	Exhaust PM10	PM10 Total	Fugitive PM2.5	Exhaust PM2.5	PM2.5 Total	Bio- CO2	NBio- CO2	Total CO2	CH4	N2O	CO2e
Category	tons/yr										MT/yr					
Hauling					0.0000			0.0000								
Vendor					1.9800e-003			2.0000e-004								
Worker					2.9813			0.2976								
Total					**2.9832**			**0.2978**								

Mitigated Construction On-Site

	ROG	NOx	CO	SO2	Fugitive PM10	Exhaust PM10	PM10 Total	Fugitive PM2.5	Exhaust PM2.5	PM2.5 Total	Bio- CO2	NBio- CO2	Total CO2	CH4	N2O	CO2e
Category	tons/yr										MT/yr					
Fugitive Dust					0.0000			0.0000								
Total					**0.0000**			**0.0000**								

3.19 16 - 2035

Mitigated Construction Off-Site

	ROG	NOx	CO	SO2	Fugitive PM10	Exhaust PM10	PM10 Total	Fugitive PM2.5	Exhaust PM2.5	PM2.5 Total	Bio- CO2	NBio- CO2	Total CO2	CH4	N2O	CO2e
Category	tons/yr										MT/yr					
Hauling					0.0000			0.0000								
Vendor					1.2200e-003			1.2000e-004								
Worker					1.8255			0.1820								
Total					**1.8267**			**0.1821**								

3.20 17 - 2036

Unmitigated Construction On-Site

	ROG	NOx	CO	SO2	Fugitive PM10	Exhaust PM10	PM10 Total	Fugitive PM2.5	Exhaust PM2.5	PM2.5 Total	Bio- CO2	NBio- CO2	Total CO2	CH4	N2O	CO2e
Category	tons/yr										MT/yr					
Fugitive Dust					0.0000			0.0000								
Total					**0.0000**			**0.0000**								

3.20 17 - 2036

Unmitigated Construction Off-Site

	ROG	NOx	CO	SO2	Fugitive PM10	Exhaust PM10	PM10 Total	Fugitive PM2.5	Exhaust PM2.5	PM2.5 Total	Bio- CO2	NBio- CO2	Total CO2	CH4	N2O	CO2e
Category	tons/yr										MT/yr					
Hauling					0.0000			0.0000								
Vendor					0.0000			0.0000								
Worker					0.0619			6.1800e-003								
Total					**0.0619**			**6.1800e-003**								

Mitigated Construction On-Site

	ROG	NOx	CO	SO2	Fugitive PM10	Exhaust PM10	PM10 Total	Fugitive PM2.5	Exhaust PM2.5	PM2.5 Total	Bio- CO2	NBio- CO2	Total CO2	CH4	N2O	CO2e
Category	tons/yr										MT/yr					
Fugitive Dust					0.0000			0.0000								
Total					**0.0000**			**0.0000**								

3.20 17 - 2036

Mitigated Construction Off-Site

	ROG	NOx	CO	SO2	Fugitive PM10	Exhaust PM10	PM10 Total	Fugitive PM2.5	Exhaust PM2.5	PM2.5 Total	Bio- CO2	NBio- CO2	Total CO2	CH4	N2O	CO2e
Category	tons/yr										MT/yr					
Hauling					0.0000			0.0000								
Vendor					0.0000			0.0000								
Worker					0.0379			3.7800e-003								
Total					**0.0379**			**3.7800e-003**								

3.21 18 - 2037

Unmitigated Construction On-Site

	ROG	NOx	CO	SO2	Fugitive PM10	Exhaust PM10	PM10 Total	Fugitive PM2.5	Exhaust PM2.5	PM2.5 Total	Bio- CO2	NBio- CO2	Total CO2	CH4	N2O	CO2e
Category	tons/yr										MT/yr					
Fugitive Dust					0.0000			0.0000								
Total					**0.0000**			**0.0000**								

3.21 18 - 2037

Unmitigated Construction Off-Site

	ROG	NOx	CO	SO2	Fugitive PM10	Exhaust PM10	PM10 Total	Fugitive PM2.5	Exhaust PM2.5	PM2.5 Total	Bio- CO2	NBio- CO2	Total CO2	CH4	N2O	CO2e
Category	tons/yr										MT/yr					
Hauling					0.0000			0.0000								
Vendor					0.0000			0.0000								
Worker					0.0619			6.1800e-003								
Total					**0.0619**			**6.1800e-003**								

Mitigated Construction On-Site

	ROG	NOx	CO	SO2	Fugitive PM10	Exhaust PM10	PM10 Total	Fugitive PM2.5	Exhaust PM2.5	PM2.5 Total	Bio- CO2	NBio- CO2	Total CO2	CH4	N2O	CO2e
Category	tons/yr										MT/yr					
Fugitive Dust					0.0000			0.0000								
Total					**0.0000**			**0.0000**								

3.21 18 - 2037

Mitigated Construction Off-Site

	ROG	NOx	CO	SO2	Fugitive PM10	Exhaust PM10	PM10 Total	Fugitive PM2.5	Exhaust PM2.5	PM2.5 Total	Bio- CO2	NBio- CO2	Total CO2	CH4	N2O	CO2e
Category	tons/yr										MT/yr					
Hauling					0.0000			0.0000								
Vendor					0.0000			0.0000								
Worker					0.0379			3.7800e-003								
Total					**0.0379**			**3.7800e-003**								

4.0 Operational Detail - Mobile

4.1 Mitigation Measures Mobile

	ROG	NOx	CO	SO2	Fugitive PM10	Exhaust PM10	PM10 Total	Fugitive PM2.5	Exhaust PM2.5	PM2.5 Total	Bio- CO2	NBio- CO2	Total CO2	CH4	N2O	CO2e
Category	tons/yr										MT/yr					
Mitigated					0.0000			0.0000								
Unmitigated					0.0000			0.0000								

AERA - Santa Barbara - Cat Canyon Construction Fugitive Dust Grading Emission Calculations

Santa Barbara-North of Santa Ynez County, Annual

1.0 Project Characteristics

1.1 Land Usage

Land Uses	Size	Metric	Lot Acreage	Floor Surface Area	Population
User Defined Industrial	2,100.00	User Defined Unit	2,100.00	0.00	0

1.2 Other Project Characteristics

Urbanization	Rural	**Wind Speed (m/s)**	3.1	**Precipitation Freq (Days)**	37
Climate Zone	4			**Operational Year**	2035
Utility Company	Pacific Gas & Electric Company				
CO2 Intensity (lb/MWhr)	641.35	**CH4 Intensity (lb/MWhr)**	0.029	**N2O Intensity (lb/MWhr)**	0.006

1.3 User Entered Comments & Non-Default Data

Project Characteristics -

Land Use - The project will be located in the East Cat Canyon oil field on approximately 2,100 acres.

Construction Phase - Estimated work schedule

Grading - Estimated additional acreage to be disturbed for grading during the project construction.

Consumer Products - Construction Run Only

Landscape Equipment - Construction Run Only

Construction Off-road Equipment Mitigation -

Off-road Equipment -

Area Coating -

Table Name	Column Name	Default Value	New Value
tblAreaCoating	ReapplicationRatePercent	10	0
tblConstructionPhase	NumDays	15,500.00	313.00
tblConstructionPhase	NumDays	15,500.00	313.00
tblConstructionPhase	NumDays	15,500.00	313.00
tblConstructionPhase	NumDays	15,500.00	313.00
tblConstructionPhase	NumDays	15,500.00	313.00
tblConstructionPhase	NumDays	15,500.00	313.00
tblConstructionPhase	NumDays	15,500.00	313.00
tblConstructionPhase	NumDays	15,500.00	313.00
tblConstructionPhase	NumDays	15,500.00	313.00
tblConstructionPhase	NumDays	15,500.00	313.00
tblConstructionPhase	NumDays	15,500.00	313.00
tblConstructionPhase	NumDaysWeek	5.00	6.00
tblConstructionPhase	NumDaysWeek	5.00	6.00
tblConstructionPhase	NumDaysWeek	5.00	6.00
tblConstructionPhase	NumDaysWeek	5.00	6.00
tblConstructionPhase	NumDaysWeek	5.00	6.00
tblConstructionPhase	NumDaysWeek	5.00	6.00
tblConstructionPhase	NumDaysWeek	5.00	6.00
tblConstructionPhase	NumDaysWeek	5.00	6.00
tblConstructionPhase	NumDaysWeek	5.00	6.00
tblConstructionPhase	NumDaysWeek	5.00	6.00
tblConstructionPhase	PhaseEndDate	1/1/2018	12/31/2017
tblConstructionPhase	PhaseEndDate	12/30/2032	12/31/2034
tblConstructionPhase	PhaseEndDate	12/30/2020	12/31/2020
tblConstructionPhase	PhaseEndDate	12/31/2021	12/31/2024

tblConstructionPhase	PhaseEndDate	12/31/2025	12/31/2026
tblConstructionPhase	PhaseEndDate	12/31/2027	12/31/2029
tblConstructionPhase	PhaseStartDate	1/1/2032	1/1/2034
tblConstructionPhase	PhaseStartDate	1/1/2021	1/1/2024
tblConstructionPhase	PhaseStartDate	1/1/2025	1/1/2026
tblConstructionPhase	PhaseStartDate	1/1/2027	1/1/2029
tblLandUse	LotAcreage	0.00	2,100.00
tblProjectCharacteristics	OperationalYear	2014	2035
tblProjectCharacteristics	UrbanizationLevel	Urban	Rural

2.0 Emissions Summary

2.1 Overall Construction

Unmitigated Construction

	ROG	NOx	CO	SO2	Fugitive PM10	Exhaust PM10	PM10 Total	Fugitive PM2.5	Exhaust PM2.5	PM2.5 Total	Bio- CO2	NBio- CO2	Total CO2	CH4	N2O	CO2e
Year	tons/yr										MT/yr					
2017					0.0267	0.0000	0.0267	2.8800e-003	0.0000	2.8800e-003	0.0000	0.0000	0.0000	0.0000	0.0000	0.0000
2018					0.0225	0.0000	0.0225	2.4300e-003	0.0000	2.4300e-003	0.0000	0.0000	0.0000	0.0000	0.0000	0.0000
2019					0.0317	0.0000	0.0317	3.4200e-003	0.0000	3.4200e-003	0.0000	0.0000	0.0000	0.0000	0.0000	0.0000
2020					5.6300e-003	0.0000	5.6300e-003	6.1000e-004	0.0000	6.1000e-004	0.0000	0.0000	0.0000	0.0000	0.0000	0.0000
2024					0.0431	0.0000	0.0431	4.6600e-003	0.0000	4.6600e-003	0.0000	0.0000	0.0000	0.0000	0.0000	0.0000
2026					1.3300e-003	0.0000	1.3300e-003	1.4000e-004	0.0000	1.4000e-004	0.0000	0.0000	0.0000	0.0000	0.0000	0.0000
2029					1.5900e-003	0.0000	1.5900e-003	1.7000e-004	0.0000	1.7000e-004	0.0000	0.0000	0.0000	0.0000	0.0000	0.0000
2030					1.8700e-003	0.0000	1.8700e-003	2.0000e-004	0.0000	2.0000e-004	0.0000	0.0000	0.0000	0.0000	0.0000	0.0000
2031					5.7700e-003	0.0000	5.7700e-003	6.2000e-004	0.0000	6.2000e-004	0.0000	0.0000	0.0000	0.0000	0.0000	0.0000
2034					2.4900e-003	0.0000	2.4900e-003	2.7000e-004	0.0000	2.7000e-004	0.0000	0.0000	0.0000	0.0000	0.0000	0.0000
2035					0.0191	0.0000	0.0191	2.0600e-003	0.0000	2.0600e-003	0.0000	0.0000	0.0000	0.0000	0.0000	0.0000
Total					**0.1618**	**0.0000**	**0.1618**	**0.0175**	**0.0000**	**0.0175**	**0.0000**	**0.0000**	**0.0000**	**0.0000**	**0.0000**	**0.0000**

2.1 Overall Construction

Mitigated Construction

	ROG	NOx	CO	SO2	Fugitive PM10	Exhaust PM10	PM10 Total	Fugitive PM2.5	Exhaust PM2.5	PM2.5 Total	Bio- CO2	NBio- CO2	Total CO2	CH4	N2O	CO2e
Year	tons/yr										MT/yr					
2017					0.0104	0.0000	0.0104	1.1200e-003	0.0000	1.1200e-003	0.0000	0.0000	0.0000	0.0000	0.0000	0.0000
2018					8.7700e-003	0.0000	8.7700e-003	9.5000e-004	0.0000	9.5000e-004	0.0000	0.0000	0.0000	0.0000	0.0000	0.0000
2019					0.0124	0.0000	0.0124	1.3400e-003	0.0000	1.3400e-003	0.0000	0.0000	0.0000	0.0000	0.0000	0.0000
2020					2.2000e-003	0.0000	2.2000e-003	2.4000e-004	0.0000	2.4000e-004	0.0000	0.0000	0.0000	0.0000	0.0000	0.0000
2024					0.0168	0.0000	0.0168	1.8200e-003	0.0000	1.8200e-003	0.0000	0.0000	0.0000	0.0000	0.0000	0.0000
2026					5.2000e-004	0.0000	5.2000e-004	6.0000e-005	0.0000	6.0000e-005	0.0000	0.0000	0.0000	0.0000	0.0000	0.0000
2029					6.2000e-004	0.0000	6.2000e-004	7.0000e-005	0.0000	7.0000e-005	0.0000	0.0000	0.0000	0.0000	0.0000	0.0000
2030					7.3000e-004	0.0000	7.3000e-004	8.0000e-005	0.0000	8.0000e-005	0.0000	0.0000	0.0000	0.0000	0.0000	0.0000
2031					2.2500e-003	0.0000	2.2500e-003	2.4000e-004	0.0000	2.4000e-004	0.0000	0.0000	0.0000	0.0000	0.0000	0.0000
2034					9.7000e-004	0.0000	9.7000e-004	1.1000e-004	0.0000	1.1000e-004	0.0000	0.0000	0.0000	0.0000	0.0000	0.0000
2035					7.4500e-003	0.0000	7.4500e-003	8.0000e-004	0.0000	8.0000e-004	0.0000	0.0000	0.0000	0.0000	0.0000	0.0000
Total					**0.0631**	**0.0000**	**0.0631**	**6.8300e-003**	**0.0000**	**6.8300e-003**	**0.0000**	**0.0000**	**0.0000**	**0.0000**	**0.0000**	**0.0000**

	ROG	**NOx**	**CO**	**SO2**	**Fugitive PM10**	**Exhaust PM10**	**PM10 Total**	**Fugitive PM2.5**	**Exhaust PM2.5**	**PM2.5 Total**	**Bio- CO2**	**NBio-CO2**	**Total CO2**	**CH4**	**N20**	**CO2e**
Percent Reduction	**0.00**	**0.00**	**0.00**	**0.00**	**60.99**	**0.00**	**60.99**	**60.88**	**0.00**	**60.88**	**0.00**	**0.00**	**0.00**	**0.00**	**0.00**	**0.00**

2.2 Overall Operational

Unmitigated Operational

	ROG	NOx	CO	SO2	Fugitive PM10	Exhaust PM10	PM10 Total	Fugitive PM2.5	Exhaust PM2.5	PM2.5 Total	Bio- CO2	NBio- CO2	Total CO2	CH4	N2O	CO2e
Category	tons/yr										MT/yr					
Area	0.0000					0.0000	0.0000		0.0000	0.0000	0.0000	0.0000	0.0000	0.0000	0.0000	0.0000
Energy	0.0000	0.0000	0.0000	0.0000		0.0000	0.0000		0.0000	0.0000	0.0000	0.0000	0.0000	0.0000	0.0000	0.0000
Mobile	0.0000	0.0000	0.0000	0.0000	0.0000	0.0000	0.0000	0.0000	0.0000	0.0000	0.0000	0.0000	0.0000	0.0000	0.0000	0.0000
Waste						0.0000	0.0000		0.0000	0.0000	0.0000	0.0000	0.0000	0.0000	0.0000	0.0000
Water						0.0000	0.0000		0.0000	0.0000	0.0000	0.0000	0.0000	0.0000	0.0000	0.0000
Total	**0.0000**	**0.0000**	**0.0000**	**0.0000**	**0.0000**	**0.0000**	**0.0000**	**0.0000**	**0.0000**	**0.0000**	**0.0000**	**0.0000**	**0.0000**	**0.0000**	**0.0000**	**0.0000**

2.2 Overall Operational

Mitigated Operational

	ROG	NOx	CO	SO2	Fugitive PM10	Exhaust PM10	PM10 Total	Fugitive PM2.5	Exhaust PM2.5	PM2.5 Total	Bio- CO2	NBio- CO2	Total CO2	CH4	N2O	CO2e
Category	tons/yr										MT/yr					
Area	0.0000					0.0000	0.0000		0.0000	0.0000	0.0000	0.0000	0.0000	0.0000	0.0000	0.0000
Energy	0.0000	0.0000	0.0000	0.0000		0.0000	0.0000		0.0000	0.0000	0.0000	0.0000	0.0000	0.0000	0.0000	0.0000
Mobile	0.0000	0.0000	0.0000	0.0000	0.0000	0.0000	0.0000	0.0000	0.0000	0.0000	0.0000	0.0000	0.0000	0.0000	0.0000	0.0000
Waste						0.0000	0.0000		0.0000	0.0000	0.0000	0.0000	0.0000	0.0000	0.0000	0.0000
Water						0.0000	0.0000		0.0000	0.0000	0.0000	0.0000	0.0000	0.0000	0.0000	0.0000
Total	**0.0000**	**0.0000**	**0.0000**	**0.0000**	**0.0000**	**0.0000**	**0.0000**	**0.0000**	**0.0000**	**0.0000**	**0.0000**	**0.0000**	**0.0000**	**0.0000**	**0.0000**	**0.0000**

	ROG	**NOx**	**CO**	**SO2**	**Fugitive PM10**	**Exhaust PM10**	**PM10 Total**	**Fugitive PM2.5**	**Exhaust PM2.5**	**PM2.5 Total**	**Bio- CO2**	**NBio-CO2**	**Total CO2**	**CH4**	**N20**	**CO2e**
Percent Reduction	**0.00**	**0.00**	**0.00**	**0.00**	**0.00**	**0.00**	**0.00**	**0.00**	**0.00**	**0.00**	**0.00**	**0.00**	**0.00**	**0.00**	**0.00**	**0.00**

3.0 Construction Detail

Construction Phase

Phase Number	Phase Name	Phase Type	Start Date	End Date	Num Days Week	Num Days	Phase Description
1	-3	Grading	1/1/2017	12/31/2017	6	313	
2	-2	Grading	1/1/2018	12/31/2018	6	313	
3	-1	Grading	1/1/2019	12/31/2019	6	313	
4	1	Grading	1/1/2020	12/31/2020	6	313	
5	5	Grading	1/1/2024	12/31/2024	6	313	
6	7	Grading	1/1/2026	12/31/2026	6	313	
7	10	Grading	1/1/2029	12/31/2029	6	313	
8	11	Grading	1/1/2030	12/31/2030	6	313	
9	12	Grading	1/1/2031	12/31/2031	6	313	
10	15	Grading	1/1/2034	12/31/2034	6	313	
11	16	Grading	1/1/2035	12/31/2035	6	313	

Acres of Grading (Site Preparation Phase): 0

Acres of Grading (Grading Phase): 0

Acres of Paving: 0

Residential Indoor: 0; Residential Outdoor: 0; Non-Residential Indoor: 0; Non-Residential Outdoor: 0 (Architectural Coating – sqft)

OffRoad Equipment

Phase Name	Offroad Equipment Type	Amount	Usage Hours	Horse Power	Load Factor

Trips and VMT

Phase Name	Offroad Equipment Count	Worker Trip Number	Vendor Trip Number	Hauling Trip Number	Worker Trip Length	Vendor Trip Length	Hauling Trip Length	Worker Vehicle Class	Vendor Vehicle Class	Hauling Vehicle Class
-3				0.00	12.30	4.60				
15				0.00	12.30	4.60				
16				0.00	12.30	4.60				
-2				0.00	12.30	4.60				
-1				0.00	12.30	4.60				
1				0.00	12.30	4.60				
5				0.00	12.30	4.60				
7				0.00	12.30	4.60				
10				0.00	12.30	4.60				
11				0.00	12.30	4.60				
12				0.00	12.30	4.60				

3.1 Mitigation Measures Construction

Water Exposed Area

Reduce Vehicle Speed on Unpaved Roads

3.2 -3 - 2017

Unmitigated Construction On-Site

	ROG	NOx	CO	SO2	Fugitive PM10	Exhaust PM10	PM10 Total	Fugitive PM2.5	Exhaust PM2.5	PM2.5 Total	Bio- CO2	NBio- CO2	Total CO2	CH4	N2O	CO2e
Category	tons/yr										MT/yr					
Fugitive Dust					0.0267	0.0000	0.0267	2.8800e-003	0.0000	2.8800e-003	0.0000	0.0000	0.0000	0.0000	0.0000	0.0000
Total					**0.0267**	**0.0000**	**0.0267**	**2.8800e-003**	**0.0000**	**2.8800e-003**	**0.0000**	**0.0000**	**0.0000**	**0.0000**	**0.0000**	**0.0000**

Unmitigated Construction Off-Site

	ROG	NOx	CO	SO2	Fugitive PM10	Exhaust PM10	PM10 Total	Fugitive PM2.5	Exhaust PM2.5	PM2.5 Total	Bio- CO2	NBio- CO2	Total CO2	CH4	N2O	CO2e
Category	tons/yr										MT/yr					
Hauling					0.0000	0.0000	0.0000	0.0000	0.0000	0.0000	0.0000	0.0000	0.0000	0.0000	0.0000	0.0000
Vendor					0.0000	0.0000	0.0000	0.0000	0.0000	0.0000	0.0000	0.0000	0.0000	0.0000	0.0000	0.0000
Worker					0.0000	0.0000	0.0000	0.0000	0.0000	0.0000	0.0000	0.0000	0.0000	0.0000	0.0000	0.0000
Total					**0.0000**	**0.0000**	**0.0000**	**0.0000**	**0.0000**	**0.0000**	**0.0000**	**0.0000**	**0.0000**	**0.0000**	**0.0000**	**0.0000**

3.2 -3 - 2017

Mitigated Construction On-Site

	ROG	NOx	CO	SO2	Fugitive PM10	Exhaust PM10	PM10 Total	Fugitive PM2.5	Exhaust PM2.5	PM2.5 Total	Bio- CO2	NBio- CO2	Total CO2	CH4	N2O	CO2e
Category	tons/yr										MT/yr					
Fugitive Dust					0.0104	0.0000	0.0104	1.1200e-003	0.0000	1.1200e-003	0.0000	0.0000	0.0000	0.0000	0.0000	0.0000
Total					**0.0104**	**0.0000**	**0.0104**	**1.1200e-003**	**0.0000**	**1.1200e-003**	**0.0000**	**0.0000**	**0.0000**	**0.0000**	**0.0000**	**0.0000**

Mitigated Construction Off-Site

	ROG	NOx	CO	SO2	Fugitive PM10	Exhaust PM10	PM10 Total	Fugitive PM2.5	Exhaust PM2.5	PM2.5 Total	Bio- CO2	NBio- CO2	Total CO2	CH4	N2O	CO2e
Category	tons/yr										MT/yr					
Hauling					0.0000	0.0000	0.0000	0.0000	0.0000	0.0000	0.0000	0.0000	0.0000	0.0000	0.0000	0.0000
Vendor					0.0000	0.0000	0.0000	0.0000	0.0000	0.0000	0.0000	0.0000	0.0000	0.0000	0.0000	0.0000
Worker					0.0000	0.0000	0.0000	0.0000	0.0000	0.0000	0.0000	0.0000	0.0000	0.0000	0.0000	0.0000
Total					**0.0000**	**0.0000**	**0.0000**	**0.0000**	**0.0000**	**0.0000**	**0.0000**	**0.0000**	**0.0000**	**0.0000**	**0.0000**	**0.0000**

3.3 -2 - 2018

Unmitigated Construction On-Site

	ROG	NOx	CO	SO2	Fugitive PM10	Exhaust PM10	PM10 Total	Fugitive PM2.5	Exhaust PM2.5	PM2.5 Total	Bio- CO2	NBio- CO2	Total CO2	CH4	N2O	CO2e
Category	tons/yr										MT/yr					
Fugitive Dust					0.0225	0.0000	0.0225	2.4300e-003	0.0000	2.4300e-003	0.0000	0.0000	0.0000	0.0000	0.0000	0.0000
Total					**0.0225**	**0.0000**	**0.0225**	**2.4300e-003**	**0.0000**	**2.4300e-003**	**0.0000**	**0.0000**	**0.0000**	**0.0000**	**0.0000**	**0.0000**

Unmitigated Construction Off-Site

	ROG	NOx	CO	SO2	Fugitive PM10	Exhaust PM10	PM10 Total	Fugitive PM2.5	Exhaust PM2.5	PM2.5 Total	Bio- CO2	NBio- CO2	Total CO2	CH4	N2O	CO2e
Category	tons/yr										MT/yr					
Hauling					0.0000	0.0000	0.0000	0.0000	0.0000	0.0000	0.0000	0.0000	0.0000	0.0000	0.0000	0.0000
Vendor					0.0000	0.0000	0.0000	0.0000	0.0000	0.0000	0.0000	0.0000	0.0000	0.0000	0.0000	0.0000
Worker					0.0000	0.0000	0.0000	0.0000	0.0000	0.0000	0.0000	0.0000	0.0000	0.0000	0.0000	0.0000
Total					**0.0000**	**0.0000**	**0.0000**	**0.0000**	**0.0000**	**0.0000**	**0.0000**	**0.0000**	**0.0000**	**0.0000**	**0.0000**	**0.0000**

3.3 -2 - 2018

Mitigated Construction On-Site

	ROG	NOx	CO	SO2	Fugitive PM10	Exhaust PM10	PM10 Total	Fugitive PM2.5	Exhaust PM2.5	PM2.5 Total	Bio- CO2	NBio- CO2	Total CO2	CH4	N2O	CO2e
Category	tons/yr										MT/yr					
Fugitive Dust					8.7700e-003	0.0000	8.7700e-003	9.5000e-004	0.0000	9.5000e-004	0.0000	0.0000	0.0000	0.0000	0.0000	0.0000
Total					**8.7700e-003**	**0.0000**	**8.7700e-003**	**9.5000e-004**	**0.0000**	**9.5000e-004**	**0.0000**	**0.0000**	**0.0000**	**0.0000**	**0.0000**	**0.0000**

Mitigated Construction Off-Site

	ROG	NOx	CO	SO2	Fugitive PM10	Exhaust PM10	PM10 Total	Fugitive PM2.5	Exhaust PM2.5	PM2.5 Total	Bio- CO2	NBio- CO2	Total CO2	CH4	N2O	CO2e
Category	tons/yr										MT/yr					
Hauling					0.0000	0.0000	0.0000	0.0000	0.0000	0.0000	0.0000	0.0000	0.0000	0.0000	0.0000	0.0000
Vendor					0.0000	0.0000	0.0000	0.0000	0.0000	0.0000	0.0000	0.0000	0.0000	0.0000	0.0000	0.0000
Worker					0.0000	0.0000	0.0000	0.0000	0.0000	0.0000	0.0000	0.0000	0.0000	0.0000	0.0000	0.0000
Total					**0.0000**	**0.0000**	**0.0000**	**0.0000**	**0.0000**	**0.0000**	**0.0000**	**0.0000**	**0.0000**	**0.0000**	**0.0000**	**0.0000**

3.4 -1 - 2019

Unmitigated Construction On-Site

	ROG	NOx	CO	SO2	Fugitive PM10	Exhaust PM10	PM10 Total	Fugitive PM2.5	Exhaust PM2.5	PM2.5 Total	Bio- CO2	NBio- CO2	Total CO2	CH4	N2O	CO2e
Category	tons/yr										MT/yr					
Fugitive Dust					0.0317	0.0000	0.0317	3.4200e-003	0.0000	3.4200e-003	0.0000	0.0000	0.0000	0.0000	0.0000	0.0000
Total					**0.0317**	**0.0000**	**0.0317**	**3.4200e-003**	**0.0000**	**3.4200e-003**	**0.0000**	**0.0000**	**0.0000**	**0.0000**	**0.0000**	**0.0000**

Unmitigated Construction Off-Site

	ROG	NOx	CO	SO2	Fugitive PM10	Exhaust PM10	PM10 Total	Fugitive PM2.5	Exhaust PM2.5	PM2.5 Total	Bio- CO2	NBio- CO2	Total CO2	CH4	N2O	CO2e
Category	tons/yr										MT/yr					
Hauling					0.0000	0.0000	0.0000	0.0000	0.0000	0.0000	0.0000	0.0000	0.0000	0.0000	0.0000	0.0000
Vendor					0.0000	0.0000	0.0000	0.0000	0.0000	0.0000	0.0000	0.0000	0.0000	0.0000	0.0000	0.0000
Worker					0.0000	0.0000	0.0000	0.0000	0.0000	0.0000	0.0000	0.0000	0.0000	0.0000	0.0000	0.0000
Total					**0.0000**	**0.0000**	**0.0000**	**0.0000**	**0.0000**	**0.0000**	**0.0000**	**0.0000**	**0.0000**	**0.0000**	**0.0000**	**0.0000**

3.4 -1 - 2019

Mitigated Construction On-Site

	ROG	NOx	CO	SO2	Fugitive PM10	Exhaust PM10	PM10 Total	Fugitive PM2.5	Exhaust PM2.5	PM2.5 Total	Bio- CO2	NBio- CO2	Total CO2	CH4	N2O	CO2e
Category	tons/yr										MT/yr					
Fugitive Dust					0.0124	0.0000	0.0124	1.3400e-003	0.0000	1.3400e-003	0.0000	0.0000	0.0000	0.0000	0.0000	0.0000
Total					**0.0124**	**0.0000**	**0.0124**	**1.3400e-003**	**0.0000**	**1.3400e-003**	**0.0000**	**0.0000**	**0.0000**	**0.0000**	**0.0000**	**0.0000**

Mitigated Construction Off-Site

	ROG	NOx	CO	SO2	Fugitive PM10	Exhaust PM10	PM10 Total	Fugitive PM2.5	Exhaust PM2.5	PM2.5 Total	Bio- CO2	NBio- CO2	Total CO2	CH4	N2O	CO2e
Category	tons/yr										MT/yr					
Hauling					0.0000	0.0000	0.0000	0.0000	0.0000	0.0000	0.0000	0.0000	0.0000	0.0000	0.0000	0.0000
Vendor					0.0000	0.0000	0.0000	0.0000	0.0000	0.0000	0.0000	0.0000	0.0000	0.0000	0.0000	0.0000
Worker					0.0000	0.0000	0.0000	0.0000	0.0000	0.0000	0.0000	0.0000	0.0000	0.0000	0.0000	0.0000
Total					**0.0000**	**0.0000**	**0.0000**	**0.0000**	**0.0000**	**0.0000**	**0.0000**	**0.0000**	**0.0000**	**0.0000**	**0.0000**	**0.0000**

3.5 1 - 2020

Unmitigated Construction On-Site

	ROG	NOx	CO	SO2	Fugitive PM10	Exhaust PM10	PM10 Total	Fugitive PM2.5	Exhaust PM2.5	PM2.5 Total	Bio- CO2	NBio- CO2	Total CO2	CH4	N2O	CO2e
Category	tons/yr										MT/yr					
Fugitive Dust					5.6300e-003	0.0000	5.6300e-003	6.1000e-004	0.0000	6.1000e-004	0.0000	0.0000	0.0000	0.0000	0.0000	0.0000
Total					**5.6300e-003**	**0.0000**	**5.6300e-003**	**6.1000e-004**	**0.0000**	**6.1000e-004**	**0.0000**	**0.0000**	**0.0000**	**0.0000**	**0.0000**	**0.0000**

Unmitigated Construction Off-Site

	ROG	NOx	CO	SO2	Fugitive PM10	Exhaust PM10	PM10 Total	Fugitive PM2.5	Exhaust PM2.5	PM2.5 Total	Bio- CO2	NBio- CO2	Total CO2	CH4	N2O	CO2e
Category	tons/yr										MT/yr					
Hauling					0.0000	0.0000	0.0000	0.0000	0.0000	0.0000	0.0000	0.0000	0.0000	0.0000	0.0000	0.0000
Vendor					0.0000	0.0000	0.0000	0.0000	0.0000	0.0000	0.0000	0.0000	0.0000	0.0000	0.0000	0.0000
Worker					0.0000	0.0000	0.0000	0.0000	0.0000	0.0000	0.0000	0.0000	0.0000	0.0000	0.0000	0.0000
Total					**0.0000**	**0.0000**	**0.0000**	**0.0000**	**0.0000**	**0.0000**	**0.0000**	**0.0000**	**0.0000**	**0.0000**	**0.0000**	**0.0000**

3.5 1 - 2020

Mitigated Construction On-Site

	ROG	NOx	CO	SO2	Fugitive PM10	Exhaust PM10	PM10 Total	Fugitive PM2.5	Exhaust PM2.5	PM2.5 Total	Bio- CO2	NBio- CO2	Total CO2	CH4	N2O	CO2e
Category	tons/yr										MT/yr					
Fugitive Dust					2.2000e-003	0.0000	2.2000e-003	2.4000e-004	0.0000	2.4000e-004	0.0000	0.0000	0.0000	0.0000	0.0000	0.0000
Total					**2.2000e-003**	**0.0000**	**2.2000e-003**	**2.4000e-004**	**0.0000**	**2.4000e-004**	**0.0000**	**0.0000**	**0.0000**	**0.0000**	**0.0000**	**0.0000**

Mitigated Construction Off-Site

	ROG	NOx	CO	SO2	Fugitive PM10	Exhaust PM10	PM10 Total	Fugitive PM2.5	Exhaust PM2.5	PM2.5 Total	Bio- CO2	NBio- CO2	Total CO2	CH4	N2O	CO2e
Category	tons/yr										MT/yr					
Hauling					0.0000	0.0000	0.0000	0.0000	0.0000	0.0000	0.0000	0.0000	0.0000	0.0000	0.0000	0.0000
Vendor					0.0000	0.0000	0.0000	0.0000	0.0000	0.0000	0.0000	0.0000	0.0000	0.0000	0.0000	0.0000
Worker					0.0000	0.0000	0.0000	0.0000	0.0000	0.0000	0.0000	0.0000	0.0000	0.0000	0.0000	0.0000
Total					**0.0000**	**0.0000**	**0.0000**	**0.0000**	**0.0000**	**0.0000**	**0.0000**	**0.0000**	**0.0000**	**0.0000**	**0.0000**	**0.0000**

3.6 5 - 2024

Unmitigated Construction On-Site

	ROG	NOx	CO	SO2	Fugitive PM10	Exhaust PM10	PM10 Total	Fugitive PM2.5	Exhaust PM2.5	PM2.5 Total	Bio- CO2	NBio- CO2	Total CO2	CH4	N2O	CO2e
Category	tons/yr										MT/yr					
Fugitive Dust					0.0431	0.0000	0.0431	4.6600e-003	0.0000	4.6600e-003	0.0000	0.0000	0.0000	0.0000	0.0000	0.0000
Total					**0.0431**	**0.0000**	**0.0431**	**4.6600e-003**	**0.0000**	**4.6600e-003**	**0.0000**	**0.0000**	**0.0000**	**0.0000**	**0.0000**	**0.0000**

Unmitigated Construction Off-Site

	ROG	NOx	CO	SO2	Fugitive PM10	Exhaust PM10	PM10 Total	Fugitive PM2.5	Exhaust PM2.5	PM2.5 Total	Bio- CO2	NBio- CO2	Total CO2	CH4	N2O	CO2e
Category	tons/yr										MT/yr					
Hauling					0.0000	0.0000	0.0000	0.0000	0.0000	0.0000	0.0000	0.0000	0.0000	0.0000	0.0000	0.0000
Vendor					0.0000	0.0000	0.0000	0.0000	0.0000	0.0000	0.0000	0.0000	0.0000	0.0000	0.0000	0.0000
Worker					0.0000	0.0000	0.0000	0.0000	0.0000	0.0000	0.0000	0.0000	0.0000	0.0000	0.0000	0.0000
Total					**0.0000**	**0.0000**	**0.0000**	**0.0000**	**0.0000**	**0.0000**	**0.0000**	**0.0000**	**0.0000**	**0.0000**	**0.0000**	**0.0000**

3.6 5 - 2024

Mitigated Construction On-Site

	ROG	NOx	CO	SO2	Fugitive PM10	Exhaust PM10	PM10 Total	Fugitive PM2.5	Exhaust PM2.5	PM2.5 Total	Bio- CO2	NBio- CO2	Total CO2	CH4	N2O	CO2e
Category	tons/yr										MT/yr					
Fugitive Dust					0.0168	0.0000	0.0168	1.8200e-003	0.0000	1.8200e-003	0.0000	0.0000	0.0000	0.0000	0.0000	0.0000
Total					**0.0168**	**0.0000**	**0.0168**	**1.8200e-003**	**0.0000**	**1.8200e-003**	**0.0000**	**0.0000**	**0.0000**	**0.0000**	**0.0000**	**0.0000**

Mitigated Construction Off-Site

	ROG	NOx	CO	SO2	Fugitive PM10	Exhaust PM10	PM10 Total	Fugitive PM2.5	Exhaust PM2.5	PM2.5 Total	Bio- CO2	NBio- CO2	Total CO2	CH4	N2O	CO2e
Category	tons/yr										MT/yr					
Hauling					0.0000	0.0000	0.0000	0.0000	0.0000	0.0000	0.0000	0.0000	0.0000	0.0000	0.0000	0.0000
Vendor					0.0000	0.0000	0.0000	0.0000	0.0000	0.0000	0.0000	0.0000	0.0000	0.0000	0.0000	0.0000
Worker					0.0000	0.0000	0.0000	0.0000	0.0000	0.0000	0.0000	0.0000	0.0000	0.0000	0.0000	0.0000
Total					**0.0000**	**0.0000**	**0.0000**	**0.0000**	**0.0000**	**0.0000**	**0.0000**	**0.0000**	**0.0000**	**0.0000**	**0.0000**	**0.0000**

3.7 7 - 2026

Unmitigated Construction On-Site

	ROG	NOx	CO	SO2	Fugitive PM10	Exhaust PM10	PM10 Total	Fugitive PM2.5	Exhaust PM2.5	PM2.5 Total	Bio- CO2	NBio- CO2	Total CO2	CH4	N2O	CO2e
Category	tons/yr										MT/yr					
Fugitive Dust					1.3300e-003	0.0000	1.3300e-003	1.4000e-004	0.0000	1.4000e-004	0.0000	0.0000	0.0000	0.0000	0.0000	0.0000
Total					**1.3300e-003**	**0.0000**	**1.3300e-003**	**1.4000e-004**	**0.0000**	**1.4000e-004**	**0.0000**	**0.0000**	**0.0000**	**0.0000**	**0.0000**	**0.0000**

Unmitigated Construction Off-Site

	ROG	NOx	CO	SO2	Fugitive PM10	Exhaust PM10	PM10 Total	Fugitive PM2.5	Exhaust PM2.5	PM2.5 Total	Bio- CO2	NBio- CO2	Total CO2	CH4	N2O	CO2e
Category	tons/yr										MT/yr					
Hauling					0.0000	0.0000	0.0000	0.0000	0.0000	0.0000	0.0000	0.0000	0.0000	0.0000	0.0000	0.0000
Vendor					0.0000	0.0000	0.0000	0.0000	0.0000	0.0000	0.0000	0.0000	0.0000	0.0000	0.0000	0.0000
Worker					0.0000	0.0000	0.0000	0.0000	0.0000	0.0000	0.0000	0.0000	0.0000	0.0000	0.0000	0.0000
Total					**0.0000**	**0.0000**	**0.0000**	**0.0000**	**0.0000**	**0.0000**	**0.0000**	**0.0000**	**0.0000**	**0.0000**	**0.0000**	**0.0000**

3.7 7 - 2026

Mitigated Construction On-Site

	ROG	NOx	CO	SO2	Fugitive PM10	Exhaust PM10	PM10 Total	Fugitive PM2.5	Exhaust PM2.5	PM2.5 Total	Bio- CO2	NBio- CO2	Total CO2	CH4	N2O	CO2e
Category	tons/yr										MT/yr					
Fugitive Dust					5.2000e-004	0.0000	5.2000e-004	6.0000e-005	0.0000	6.0000e-005	0.0000	0.0000	0.0000	0.0000	0.0000	0.0000
Total					**5.2000e-004**	**0.0000**	**5.2000e-004**	**6.0000e-005**	**0.0000**	**6.0000e-005**	**0.0000**	**0.0000**	**0.0000**	**0.0000**	**0.0000**	**0.0000**

Mitigated Construction Off-Site

	ROG	NOx	CO	SO2	Fugitive PM10	Exhaust PM10	PM10 Total	Fugitive PM2.5	Exhaust PM2.5	PM2.5 Total	Bio- CO2	NBio- CO2	Total CO2	CH4	N2O	CO2e
Category	tons/yr										MT/yr					
Hauling					0.0000	0.0000	0.0000	0.0000	0.0000	0.0000	0.0000	0.0000	0.0000	0.0000	0.0000	0.0000
Vendor					0.0000	0.0000	0.0000	0.0000	0.0000	0.0000	0.0000	0.0000	0.0000	0.0000	0.0000	0.0000
Worker					0.0000	0.0000	0.0000	0.0000	0.0000	0.0000	0.0000	0.0000	0.0000	0.0000	0.0000	0.0000
Total					**0.0000**	**0.0000**	**0.0000**	**0.0000**	**0.0000**	**0.0000**	**0.0000**	**0.0000**	**0.0000**	**0.0000**	**0.0000**	**0.0000**

3.8 10 - 2029

Unmitigated Construction On-Site

	ROG	NOx	CO	SO2	Fugitive PM10	Exhaust PM10	PM10 Total	Fugitive PM2.5	Exhaust PM2.5	PM2.5 Total	Bio- CO2	NBio- CO2	Total CO2	CH4	N2O	CO2e
Category	tons/yr										MT/yr					
Fugitive Dust					1.5900e-003	0.0000	1.5900e-003	1.7000e-004	0.0000	1.7000e-004	0.0000	0.0000	0.0000	0.0000	0.0000	0.0000
Total					**1.5900e-003**	**0.0000**	**1.5900e-003**	**1.7000e-004**	**0.0000**	**1.7000e-004**	**0.0000**	**0.0000**	**0.0000**	**0.0000**	**0.0000**	**0.0000**

Unmitigated Construction Off-Site

	ROG	NOx	CO	SO2	Fugitive PM10	Exhaust PM10	PM10 Total	Fugitive PM2.5	Exhaust PM2.5	PM2.5 Total	Bio- CO2	NBio- CO2	Total CO2	CH4	N2O	CO2e
Category	tons/yr										MT/yr					
Hauling					0.0000	0.0000	0.0000	0.0000	0.0000	0.0000	0.0000	0.0000	0.0000	0.0000	0.0000	0.0000
Vendor					0.0000	0.0000	0.0000	0.0000	0.0000	0.0000	0.0000	0.0000	0.0000	0.0000	0.0000	0.0000
Worker					0.0000	0.0000	0.0000	0.0000	0.0000	0.0000	0.0000	0.0000	0.0000	0.0000	0.0000	0.0000
Total					**0.0000**	**0.0000**	**0.0000**	**0.0000**	**0.0000**	**0.0000**	**0.0000**	**0.0000**	**0.0000**	**0.0000**	**0.0000**	**0.0000**

3.8 10 - 2029

Mitigated Construction On-Site

	ROG	NOx	CO	SO2	Fugitive PM10	Exhaust PM10	PM10 Total	Fugitive PM2.5	Exhaust PM2.5	PM2.5 Total	Bio- CO2	NBio- CO2	Total CO2	CH4	N2O	CO2e
Category	tons/yr										MT/yr					
Fugitive Dust					6.2000e-004	0.0000	6.2000e-004	7.0000e-005	0.0000	7.0000e-005	0.0000	0.0000	0.0000	0.0000	0.0000	0.0000
Total					**6.2000e-004**	**0.0000**	**6.2000e-004**	**7.0000e-005**	**0.0000**	**7.0000e-005**	**0.0000**	**0.0000**	**0.0000**	**0.0000**	**0.0000**	**0.0000**

Mitigated Construction Off-Site

	ROG	NOx	CO	SO2	Fugitive PM10	Exhaust PM10	PM10 Total	Fugitive PM2.5	Exhaust PM2.5	PM2.5 Total	Bio- CO2	NBio- CO2	Total CO2	CH4	N2O	CO2e
Category	tons/yr										MT/yr					
Hauling					0.0000	0.0000	0.0000	0.0000	0.0000	0.0000	0.0000	0.0000	0.0000	0.0000	0.0000	0.0000
Vendor					0.0000	0.0000	0.0000	0.0000	0.0000	0.0000	0.0000	0.0000	0.0000	0.0000	0.0000	0.0000
Worker					0.0000	0.0000	0.0000	0.0000	0.0000	0.0000	0.0000	0.0000	0.0000	0.0000	0.0000	0.0000
Total					**0.0000**	**0.0000**	**0.0000**	**0.0000**	**0.0000**	**0.0000**	**0.0000**	**0.0000**	**0.0000**	**0.0000**	**0.0000**	**0.0000**

3.9 11 - 2030

Unmitigated Construction On-Site

	ROG	NOx	CO	SO2	Fugitive PM10	Exhaust PM10	PM10 Total	Fugitive PM2.5	Exhaust PM2.5	PM2.5 Total	Bio- CO2	NBio- CO2	Total CO2	CH4	N2O	CO2e
Category	tons/yr										MT/yr					
Fugitive Dust					1.8700e-003	0.0000	1.8700e-003	2.0000e-004	0.0000	2.0000e-004	0.0000	0.0000	0.0000	0.0000	0.0000	0.0000
Total					**1.8700e-003**	**0.0000**	**1.8700e-003**	**2.0000e-004**	**0.0000**	**2.0000e-004**	**0.0000**	**0.0000**	**0.0000**	**0.0000**	**0.0000**	**0.0000**

Unmitigated Construction Off-Site

	ROG	NOx	CO	SO2	Fugitive PM10	Exhaust PM10	PM10 Total	Fugitive PM2.5	Exhaust PM2.5	PM2.5 Total	Bio- CO2	NBio- CO2	Total CO2	CH4	N2O	CO2e
Category	tons/yr										MT/yr					
Hauling					0.0000	0.0000	0.0000	0.0000	0.0000	0.0000	0.0000	0.0000	0.0000	0.0000	0.0000	0.0000
Vendor					0.0000	0.0000	0.0000	0.0000	0.0000	0.0000	0.0000	0.0000	0.0000	0.0000	0.0000	0.0000
Worker					0.0000	0.0000	0.0000	0.0000	0.0000	0.0000	0.0000	0.0000	0.0000	0.0000	0.0000	0.0000
Total					**0.0000**	**0.0000**	**0.0000**	**0.0000**	**0.0000**	**0.0000**	**0.0000**	**0.0000**	**0.0000**	**0.0000**	**0.0000**	**0.0000**

3.9 11 - 2030

Mitigated Construction On-Site

	ROG	NOx	CO	SO2	Fugitive PM10	Exhaust PM10	PM10 Total	Fugitive PM2.5	Exhaust PM2.5	PM2.5 Total	Bio- CO2	NBio- CO2	Total CO2	CH4	N2O	CO2e
Category	tons/yr										MT/yr					
Fugitive Dust					7.3000e-004	0.0000	7.3000e-004	8.0000e-005	0.0000	8.0000e-005	0.0000	0.0000	0.0000	0.0000	0.0000	0.0000
Total					**7.3000e-004**	**0.0000**	**7.3000e-004**	**8.0000e-005**	**0.0000**	**8.0000e-005**	**0.0000**	**0.0000**	**0.0000**	**0.0000**	**0.0000**	**0.0000**

Mitigated Construction Off-Site

	ROG	NOx	CO	SO2	Fugitive PM10	Exhaust PM10	PM10 Total	Fugitive PM2.5	Exhaust PM2.5	PM2.5 Total	Bio- CO2	NBio- CO2	Total CO2	CH4	N2O	CO2e
Category	tons/yr										MT/yr					
Hauling					0.0000	0.0000	0.0000	0.0000	0.0000	0.0000	0.0000	0.0000	0.0000	0.0000	0.0000	0.0000
Vendor					0.0000	0.0000	0.0000	0.0000	0.0000	0.0000	0.0000	0.0000	0.0000	0.0000	0.0000	0.0000
Worker					0.0000	0.0000	0.0000	0.0000	0.0000	0.0000	0.0000	0.0000	0.0000	0.0000	0.0000	0.0000
Total					**0.0000**	**0.0000**	**0.0000**	**0.0000**	**0.0000**	**0.0000**	**0.0000**	**0.0000**	**0.0000**	**0.0000**	**0.0000**	**0.0000**

3.10 12 - 2031

Unmitigated Construction On-Site

	ROG	NOx	CO	SO2	Fugitive PM10	Exhaust PM10	PM10 Total	Fugitive PM2.5	Exhaust PM2.5	PM2.5 Total	Bio- CO2	NBio- CO2	Total CO2	CH4	N2O	CO2e
Category	tons/yr										MT/yr					
Fugitive Dust					5.7700e-003	0.0000	5.7700e-003	6.2000e-004	0.0000	6.2000e-004	0.0000	0.0000	0.0000	0.0000	0.0000	0.0000
Total					**5.7700e-003**	**0.0000**	**5.7700e-003**	**6.2000e-004**	**0.0000**	**6.2000e-004**	**0.0000**	**0.0000**	**0.0000**	**0.0000**	**0.0000**	**0.0000**

Unmitigated Construction Off-Site

	ROG	NOx	CO	SO2	Fugitive PM10	Exhaust PM10	PM10 Total	Fugitive PM2.5	Exhaust PM2.5	PM2.5 Total	Bio- CO2	NBio- CO2	Total CO2	CH4	N2O	CO2e
Category	tons/yr										MT/yr					
Hauling					0.0000	0.0000	0.0000	0.0000	0.0000	0.0000	0.0000	0.0000	0.0000	0.0000	0.0000	0.0000
Vendor					0.0000	0.0000	0.0000	0.0000	0.0000	0.0000	0.0000	0.0000	0.0000	0.0000	0.0000	0.0000
Worker					0.0000	0.0000	0.0000	0.0000	0.0000	0.0000	0.0000	0.0000	0.0000	0.0000	0.0000	0.0000
Total					**0.0000**	**0.0000**	**0.0000**	**0.0000**	**0.0000**	**0.0000**	**0.0000**	**0.0000**	**0.0000**	**0.0000**	**0.0000**	**0.0000**

3.10 12 - 2031

Mitigated Construction On-Site

	ROG	NOx	CO	SO2	Fugitive PM10	Exhaust PM10	PM10 Total	Fugitive PM2.5	Exhaust PM2.5	PM2.5 Total	Bio- CO2	NBio- CO2	Total CO2	CH4	N2O	CO2e
Category	tons/yr										MT/yr					
Fugitive Dust					2.2500e-003	0.0000	2.2500e-003	2.4000e-004	0.0000	2.4000e-004	0.0000	0.0000	0.0000	0.0000	0.0000	0.0000
Total					**2.2500e-003**	**0.0000**	**2.2500e-003**	**2.4000e-004**	**0.0000**	**2.4000e-004**	**0.0000**	**0.0000**	**0.0000**	**0.0000**	**0.0000**	**0.0000**

Mitigated Construction Off-Site

	ROG	NOx	CO	SO2	Fugitive PM10	Exhaust PM10	PM10 Total	Fugitive PM2.5	Exhaust PM2.5	PM2.5 Total	Bio- CO2	NBio- CO2	Total CO2	CH4	N2O	CO2e
Category	tons/yr										MT/yr					
Hauling					0.0000	0.0000	0.0000	0.0000	0.0000	0.0000	0.0000	0.0000	0.0000	0.0000	0.0000	0.0000
Vendor					0.0000	0.0000	0.0000	0.0000	0.0000	0.0000	0.0000	0.0000	0.0000	0.0000	0.0000	0.0000
Worker					0.0000	0.0000	0.0000	0.0000	0.0000	0.0000	0.0000	0.0000	0.0000	0.0000	0.0000	0.0000
Total					**0.0000**	**0.0000**	**0.0000**	**0.0000**	**0.0000**	**0.0000**	**0.0000**	**0.0000**	**0.0000**	**0.0000**	**0.0000**	**0.0000**

3.11 15 - 2034

Unmitigated Construction On-Site

	ROG	NOx	CO	SO2	Fugitive PM10	Exhaust PM10	PM10 Total	Fugitive PM2.5	Exhaust PM2.5	PM2.5 Total	Bio- CO2	NBio- CO2	Total CO2	CH4	N2O	CO2e
Category	tons/yr										MT/yr					
Fugitive Dust					2.4900e-003	0.0000	2.4900e-003	2.7000e-004	0.0000	2.7000e-004	0.0000	0.0000	0.0000	0.0000	0.0000	0.0000
Total					**2.4900e-003**	**0.0000**	**2.4900e-003**	**2.7000e-004**	**0.0000**	**2.7000e-004**	**0.0000**	**0.0000**	**0.0000**	**0.0000**	**0.0000**	**0.0000**

Unmitigated Construction Off-Site

	ROG	NOx	CO	SO2	Fugitive PM10	Exhaust PM10	PM10 Total	Fugitive PM2.5	Exhaust PM2.5	PM2.5 Total	Bio- CO2	NBio- CO2	Total CO2	CH4	N2O	CO2e
Category	tons/yr										MT/yr					
Hauling					0.0000	0.0000	0.0000	0.0000	0.0000	0.0000	0.0000	0.0000	0.0000	0.0000	0.0000	0.0000
Vendor					0.0000	0.0000	0.0000	0.0000	0.0000	0.0000	0.0000	0.0000	0.0000	0.0000	0.0000	0.0000
Worker					0.0000	0.0000	0.0000	0.0000	0.0000	0.0000	0.0000	0.0000	0.0000	0.0000	0.0000	0.0000
Total					**0.0000**	**0.0000**	**0.0000**	**0.0000**	**0.0000**	**0.0000**	**0.0000**	**0.0000**	**0.0000**	**0.0000**	**0.0000**	**0.0000**

3.11 15 - 2034

Mitigated Construction On-Site

	ROG	NOx	CO	SO2	Fugitive PM10	Exhaust PM10	PM10 Total	Fugitive PM2.5	Exhaust PM2.5	PM2.5 Total	Bio- CO2	NBio- CO2	Total CO2	CH4	N2O	CO2e
Category	tons/yr										MT/yr					
Fugitive Dust					9.7000e-004	0.0000	9.7000e-004	1.1000e-004	0.0000	1.1000e-004	0.0000	0.0000	0.0000	0.0000	0.0000	0.0000
Total					**9.7000e-004**	**0.0000**	**9.7000e-004**	**1.1000e-004**	**0.0000**	**1.1000e-004**	**0.0000**	**0.0000**	**0.0000**	**0.0000**	**0.0000**	**0.0000**

Mitigated Construction Off-Site

	ROG	NOx	CO	SO2	Fugitive PM10	Exhaust PM10	PM10 Total	Fugitive PM2.5	Exhaust PM2.5	PM2.5 Total	Bio- CO2	NBio- CO2	Total CO2	CH4	N2O	CO2e
Category	tons/yr										MT/yr					
Hauling					0.0000	0.0000	0.0000	0.0000	0.0000	0.0000	0.0000	0.0000	0.0000	0.0000	0.0000	0.0000
Vendor					0.0000	0.0000	0.0000	0.0000	0.0000	0.0000	0.0000	0.0000	0.0000	0.0000	0.0000	0.0000
Worker					0.0000	0.0000	0.0000	0.0000	0.0000	0.0000	0.0000	0.0000	0.0000	0.0000	0.0000	0.0000
Total					**0.0000**	**0.0000**	**0.0000**	**0.0000**	**0.0000**	**0.0000**	**0.0000**	**0.0000**	**0.0000**	**0.0000**	**0.0000**	**0.0000**

3.12 16 - 2035

Unmitigated Construction On-Site

	ROG	NOx	CO	SO2	Fugitive PM10	Exhaust PM10	PM10 Total	Fugitive PM2.5	Exhaust PM2.5	PM2.5 Total	Bio- CO2	NBio- CO2	Total CO2	CH4	N2O	CO2e
Category	tons/yr										MT/yr					
Fugitive Dust					0.0191	0.0000	0.0191	2.0600e-003	0.0000	2.0600e-003	0.0000	0.0000	0.0000	0.0000	0.0000	0.0000
Total					**0.0191**	**0.0000**	**0.0191**	**2.0600e-003**	**0.0000**	**2.0600e-003**	**0.0000**	**0.0000**	**0.0000**	**0.0000**	**0.0000**	**0.0000**

Unmitigated Construction Off-Site

	ROG	NOx	CO	SO2	Fugitive PM10	Exhaust PM10	PM10 Total	Fugitive PM2.5	Exhaust PM2.5	PM2.5 Total	Bio- CO2	NBio- CO2	Total CO2	CH4	N2O	CO2e
Category	tons/yr										MT/yr					
Hauling					0.0000	0.0000	0.0000	0.0000	0.0000	0.0000	0.0000	0.0000	0.0000	0.0000	0.0000	0.0000
Vendor					0.0000	0.0000	0.0000	0.0000	0.0000	0.0000	0.0000	0.0000	0.0000	0.0000	0.0000	0.0000
Worker					0.0000	0.0000	0.0000	0.0000	0.0000	0.0000	0.0000	0.0000	0.0000	0.0000	0.0000	0.0000
Total					**0.0000**	**0.0000**	**0.0000**	**0.0000**	**0.0000**	**0.0000**	**0.0000**	**0.0000**	**0.0000**	**0.0000**	**0.0000**	**0.0000**

3.12 16 - 2035

Mitigated Construction On-Site

	ROG	NOx	CO	SO2	Fugitive PM10	Exhaust PM10	PM10 Total	Fugitive PM2.5	Exhaust PM2.5	PM2.5 Total	Bio- CO2	NBio- CO2	Total CO2	CH4	N2O	CO2e
Category	tons/yr										MT/yr					
Fugitive Dust					7.4500e-003	0.0000	7.4500e-003	8.0000e-004	0.0000	8.0000e-004	0.0000	0.0000	0.0000	0.0000	0.0000	0.0000
Total					**7.4500e-003**	**0.0000**	**7.4500e-003**	**8.0000e-004**	**0.0000**	**8.0000e-004**	**0.0000**	**0.0000**	**0.0000**	**0.0000**	**0.0000**	**0.0000**

Mitigated Construction Off-Site

	ROG	NOx	CO	SO2	Fugitive PM10	Exhaust PM10	PM10 Total	Fugitive PM2.5	Exhaust PM2.5	PM2.5 Total	Bio- CO2	NBio- CO2	Total CO2	CH4	N2O	CO2e
Category	tons/yr										MT/yr					
Hauling					0.0000	0.0000	0.0000	0.0000	0.0000	0.0000	0.0000	0.0000	0.0000	0.0000	0.0000	0.0000
Vendor					0.0000	0.0000	0.0000	0.0000	0.0000	0.0000	0.0000	0.0000	0.0000	0.0000	0.0000	0.0000
Worker					0.0000	0.0000	0.0000	0.0000	0.0000	0.0000	0.0000	0.0000	0.0000	0.0000	0.0000	0.0000
Total					**0.0000**	**0.0000**	**0.0000**	**0.0000**	**0.0000**	**0.0000**	**0.0000**	**0.0000**	**0.0000**	**0.0000**	**0.0000**	**0.0000**

4.0 Operational Detail - Mobile

4.1 Mitigation Measures Mobile

	ROG	NOx	CO	SO2	Fugitive PM10	Exhaust PM10	PM10 Total	Fugitive PM2.5	Exhaust PM2.5	PM2.5 Total	Bio- CO2	NBio- CO2	Total CO2	CH4	N2O	CO2e
Category	tons/yr										MT/yr					
Mitigated	0.0000	0.0000	0.0000	0.0000	0.0000	0.0000	0.0000	0.0000	0.0000	0.0000	0.0000	0.0000	0.0000	0.0000	0.0000	0.0000
Unmitigated	0.0000	0.0000	0.0000	0.0000	0.0000	0.0000	0.0000	0.0000	0.0000	0.0000	0.0000	0.0000	0.0000	0.0000	0.0000	0.0000

4.2 Trip Summary Information

	Average Daily Trip Rate			Unmitigated	Mitigated
Land Use	Weekday	Saturday	Sunday	Annual VMT	Annual VMT
User Defined Industrial	0.00	0.00	0.00		
Total	0.00	0.00	0.00		

4.3 Trip Type Information

	Miles			Trip %			Trip Purpose %		
Land Use	H-W or C-W	H-S or C-C	H-O or C-NW	H-W or C-W	H-S or C-C	H-O or C-NW	Primary	Diverted	Pass-by
User Defined Industrial	8.80	4.60	4.60	0.00	0.00	0.00	0	0	0

4.4 Fleet Mix

LDA	LDT1	LDT2	MDV	LHD1	LHD2	MHD	HHD	OBUS	UBUS	MCY	SBUS	MH
0.491782	0.035344	0.208299	0.151084	0.049421	0.007284	0.022101	0.017711	0.002208	0.002109	0.008228	0.001403	0.003026

5.0 Energy Detail

Historical Energy Use: N

5.1 Mitigation Measures Energy

	ROG	NOx	CO	SO2	Fugitive PM10	Exhaust PM10	PM10 Total	Fugitive PM2.5	Exhaust PM2.5	PM2.5 Total	Bio- CO2	NBio- CO2	Total CO2	CH4	N2O	CO2e
Category	tons/yr										MT/yr					
Electricity Mitigated						0.0000	0.0000		0.0000	0.0000	0.0000	0.0000	0.0000	0.0000	0.0000	0.0000
Electricity Unmitigated						0.0000	0.0000		0.0000	0.0000	0.0000	0.0000	0.0000	0.0000	0.0000	0.0000
NaturalGas Mitigated	0.0000	0.0000	0.0000	0.0000		0.0000	0.0000		0.0000	0.0000	0.0000	0.0000	0.0000	0.0000	0.0000	0.0000
NaturalGas Unmitigated	0.0000	0.0000	0.0000	0.0000		0.0000	0.0000		0.0000	0.0000	0.0000	0.0000	0.0000	0.0000	0.0000	0.0000

5.2 Energy by Land Use - NaturalGas

Unmitigated

	NaturalGas Use	ROG	NOx	CO	SO2	Fugitive PM10	Exhaust PM10	PM10 Total	Fugitive PM2.5	Exhaust PM2.5	PM2.5 Total	Bio- CO2	NBio- CO2	Total CO2	CH4	N2O	CO2e
Land Use	kBTU/yr	tons/yr										MT/yr					
User Defined Industrial	0	0.0000	0.0000	0.0000	0.0000		0.0000	0.0000		0.0000	0.0000	0.0000	0.0000	0.0000	0.0000	0.0000	0.0000
Total		**0.0000**	**0.0000**	**0.0000**	**0.0000**		**0.0000**	**0.0000**		**0.0000**	**0.0000**	**0.0000**	**0.0000**	**0.0000**	**0.0000**	**0.0000**	**0.0000**

5.2 Energy by Land Use - NaturalGas

Mitigated

	NaturalGas Use	ROG	NOx	CO	SO2	Fugitive PM10	Exhaust PM10	PM10 Total	Fugitive PM2.5	Exhaust PM2.5	PM2.5 Total	Bio- CO2	NBio- CO2	Total CO2	CH4	N2O	CO2e
Land Use	kBTU/yr	tons/yr										MT/yr					
User Defined Industrial	0	0.0000	0.0000	0.0000	0.0000		0.0000	0.0000		0.0000	0.0000	0.0000	0.0000	0.0000	0.0000	0.0000	0.0000
Total		**0.0000**	**0.0000**	**0.0000**	**0.0000**		**0.0000**	**0.0000**		**0.0000**	**0.0000**	**0.0000**	**0.0000**	**0.0000**	**0.0000**	**0.0000**	**0.0000**

5.3 Energy by Land Use - Electricity

Unmitigated

	Electricity Use	Total CO2	CH4	N2O	CO2e
Land Use	kWh/yr	MT/yr			
User Defined Industrial	0	0.0000	0.0000	0.0000	0.0000
Total		**0.0000**	**0.0000**	**0.0000**	**0.0000**

5.3 Energy by Land Use - Electricity

Mitigated

	Electricity Use	Total CO2	CH4	N2O	CO2e
Land Use	kWh/yr	MT/yr			
User Defined Industrial	0	0.0000	0.0000	0.0000	0.0000
Total		**0.0000**	**0.0000**	**0.0000**	**0.0000**

6.0 Area Detail

6.1 Mitigation Measures Area

	ROG	NOx	CO	SO2	Fugitive PM10	Exhaust PM10	PM10 Total	Fugitive PM2.5	Exhaust PM2.5	PM2.5 Total	Bio- CO2	NBio- CO2	Total CO2	CH4	N2O	CO2e
Category	tons/yr										MT/yr					
Mitigated	0.0000					0.0000	0.0000		0.0000	0.0000	0.0000	0.0000	0.0000	0.0000	0.0000	0.0000
Unmitigated	0.0000					0.0000	0.0000		0.0000	0.0000	0.0000	0.0000	0.0000	0.0000	0.0000	0.0000

6.2 Area by SubCategory

Unmitigated

	ROG	NOx	CO	SO2	Fugitive PM10	Exhaust PM10	PM10 Total	Fugitive PM2.5	Exhaust PM2.5	PM2.5 Total	Bio- CO2	NBio- CO2	Total CO2	CH4	N2O	CO2e
SubCategory	tons/yr										MT/yr					
Architectural Coating	0.0000					0.0000	0.0000		0.0000	0.0000	0.0000	0.0000	0.0000	0.0000	0.0000	0.0000
Total	**0.0000**					**0.0000**	**0.0000**		**0.0000**	**0.0000**	**0.0000**	**0.0000**	**0.0000**	**0.0000**	**0.0000**	**0.0000**

Mitigated

	ROG	NOx	CO	SO2	Fugitive PM10	Exhaust PM10	PM10 Total	Fugitive PM2.5	Exhaust PM2.5	PM2.5 Total	Bio- CO2	NBio- CO2	Total CO2	CH4	N2O	CO2e
SubCategory	tons/yr										MT/yr					
Architectural Coating	0.0000					0.0000	0.0000		0.0000	0.0000	0.0000	0.0000	0.0000	0.0000	0.0000	0.0000
Total	**0.0000**					**0.0000**	**0.0000**		**0.0000**	**0.0000**	**0.0000**	**0.0000**	**0.0000**	**0.0000**	**0.0000**	**0.0000**

7.0 Water Detail

7.1 Mitigation Measures Water

	Total CO2	CH4	N2O	CO2e
Category	MT/yr			
Mitigated	0.0000	0.0000	0.0000	0.0000
Unmitigated	0.0000	0.0000	0.0000	0.0000

7.2 Water by Land Use

Unmitigated

	Indoor/Outdoor Use	Total CO2	CH4	N2O	CO2e
Land Use	Mgal	MT/yr			
User Defined Industrial	0 / 0	0.0000	0.0000	0.0000	0.0000
Total		**0.0000**	**0.0000**	**0.0000**	**0.0000**

7.2 Water by Land Use

Mitigated

	Indoor/Outdoor Use	Total CO2	CH4	N2O	CO2e
Land Use	Mgal	MT/yr			
User Defined Industrial	0 / 0	0.0000	0.0000	0.0000	0.0000
Total		**0.0000**	**0.0000**	**0.0000**	**0.0000**

8.0 Waste Detail

8.1 Mitigation Measures Waste

Category/Year

	Total CO2	CH4	N2O	CO2e
	MT/yr			
Mitigated	0.0000	0.0000	0.0000	0.0000
Unmitigated	0.0000	0.0000	0.0000	0.0000

8.2 Waste by Land Use

Unmitigated

	Waste Disposed	Total CO2	CH4	N2O	CO2e
Land Use	tons	MT/yr			
User Defined Industrial	0	0.0000	0.0000	0.0000	0.0000
Total		**0.0000**	**0.0000**	**0.0000**	**0.0000**

Mitigated

	Waste Disposed	Total CO2	CH4	N2O	CO2e
Land Use	tons	MT/yr			
User Defined Industrial	0	0.0000	0.0000	0.0000	0.0000
Total		**0.0000**	**0.0000**	**0.0000**	**0.0000**

9.0 Operational Offroad

Equipment Type	Number	Hours/Day	Days/Year	Horse Power	Load Factor	Fuel Type

10.0 Vegetation

AERA - Santa Barbara - Cat Canyon Construction Fugitive Dust Cut/Fill Emission Calculations

Santa Barbara-North of Santa Ynez County, Annual

1.0 Project Characteristics

1.1 Land Usage

Land Uses	Size	Metric	Lot Acreage	Floor Surface Area	Population
User Defined Industrial	2,100.00	User Defined Unit	2,100.00	0.00	0

1.2 Other Project Characteristics

Urbanization	Rural	**Wind Speed (m/s)**	3.1	**Precipitation Freq (Days)**	37
Climate Zone	4			**Operational Year**	2035
Utility Company	Pacific Gas & Electric Company				
CO2 Intensity (lb/MWhr)	641.35	**CH4 Intensity (lb/MWhr)**	0.029	**N2O Intensity (lb/MWhr)**	0.006

1.3 User Entered Comments & Non-Default Data

Project Characteristics -

Land Use - The project will be located in the East Cat Canyon oil field on approximately 2,100 acres.

Construction Phase - Construction Schedule

Grading - Estimated cut and fill during the project construction. Grading emissions are calculated in a separate model run.

Consumer Products - Construction Run Only

Landscape Equipment - Construction Run Only

Construction Off-road Equipment Mitigation -

Off-road Equipment -

Table Name	Column Name	Default Value	New Value
tblConstructionPhase	NumDays	15,500.00	312.00

tblConstructionPhase	NumDays	15,500.00	313.00
tblConstructionPhase	NumDays	15,500.00	313.00
tblConstructionPhase	NumDays	15,500.00	313.00
tblConstructionPhase	NumDays	15,500.00	313.00
tblConstructionPhase	NumDays	15,500.00	313.00
tblConstructionPhase	NumDays	15,500.00	313.00
tblConstructionPhase	NumDays	15,500.00	313.00
tblConstructionPhase	NumDays	15,500.00	313.00
tblConstructionPhase	NumDays	15,500.00	313.00
tblConstructionPhase	NumDays	15,500.00	313.00
tblConstructionPhase	NumDays	15,500.00	313.00
tblConstructionPhase	NumDays	15,500.00	313.00
tblConstructionPhase	NumDays	15,500.00	313.00
tblConstructionPhase	NumDays	15,500.00	313.00
tblConstructionPhase	NumDaysWeek	5.00	6.00
tblConstructionPhase	NumDaysWeek	5.00	6.00
tblConstructionPhase	NumDaysWeek	5.00	6.00
tblConstructionPhase	NumDaysWeek	5.00	6.00
tblConstructionPhase	NumDaysWeek	5.00	6.00
tblConstructionPhase	NumDaysWeek	5.00	6.00
tblConstructionPhase	NumDaysWeek	5.00	6.00
tblConstructionPhase	NumDaysWeek	5.00	6.00
tblConstructionPhase	NumDaysWeek	5.00	6.00
tblConstructionPhase	NumDaysWeek	5.00	6.00
tblConstructionPhase	NumDaysWeek	5.00	6.00
tblConstructionPhase	NumDaysWeek	5.00	6.00
tblConstructionPhase	NumDaysWeek	5.00	6.00
tblConstructionPhase	NumDaysWeek	5.00	6.00

tblConstructionPhase	NumDaysWeek	5.00	6.00
tblConstructionPhase	PhaseEndDate	12/30/2017	12/31/2017
tblConstructionPhase	PhaseEndDate	12/31/2027	12/31/2028
tblConstructionPhase	PhaseEndDate	12/30/2032	12/31/2034
tblConstructionPhase	PhaseEndDate	12/30/2020	12/31/2020
tblConstructionPhase	PhaseEndDate	1/1/2024	12/31/2023
tblConstructionPhase	PhaseEndDate	12/30/2024	12/31/2024
tblConstructionPhase	PhaseEndDate	12/31/2025	12/31/2026
tblConstructionPhase	PhaseStartDate	1/1/2027	1/1/2028
tblConstructionPhase	PhaseStartDate	1/1/2032	1/1/2034
tblConstructionPhase	PhaseStartDate	1/1/2025	1/1/2026
tblGrading	MaterialExported	0.00	521,238.00
tblGrading	MaterialExported	0.00	42,099.00
tblGrading	MaterialExported	0.00	25,199.00
tblGrading	MaterialExported	0.00	78,439.00
tblGrading	MaterialExported	0.00	11,997.00
tblGrading	MaterialExported	0.00	177,032.00
tblGrading	MaterialExported	0.00	435,779.00
tblGrading	MaterialExported	0.00	284,010.00
tblGrading	MaterialExported	0.00	121,268.00
tblGrading	MaterialExported	0.00	1,444,936.00
tblGrading	MaterialExported	0.00	6,276.00
tblGrading	MaterialImported	0.00	266,903.00
tblGrading	MaterialImported	0.00	13,573.00
tblGrading	MaterialImported	0.00	207,038.00
tblGrading	MaterialImported	0.00	17,828.00
tblGrading	MaterialImported	0.00	501,266.00
tblGrading	MaterialImported	0.00	310,882.00

tblGrading	MaterialImported	0.00	768,987.00
tblGrading	MaterialImported	0.00	35,804.00
tblGrading	MaterialImported	0.00	975,163.00
tblGrading	MaterialImported	0.00	13,724.00
tblLandUse	LotAcreage	0.00	2,100.00
tblProjectCharacteristics	OperationalYear	2014	2035
tblProjectCharacteristics	UrbanizationLevel	Urban	Rural

2.0 Emissions Summary

2.1 Overall Construction

Unmitigated Construction

	ROG	NOx	CO	SO2	Fugitive PM10	Exhaust PM10	PM10 Total	Fugitive PM2.5	Exhaust PM2.5	PM2.5 Total	Bio- CO2	NBio- CO2	Total CO2	CH4	N2O	CO2e
Year	tons/yr										MT/yr					
2017					0.0696			0.0105								
2018					0.0659			9.9800e-003								
2019					0.0930			0.0141								
2020					0.0139			2.1100e-003								
2021					0.0000			0.0000								
2022					0.0000			0.0000								
2023					0.0000			0.0000								
2024					0.2144			0.0325								
2026					1.7700e-003			2.7000e-004								
2028					0.0000			0.0000								
2029					3.7200e-003			5.6000e-004								
2030					3.4200e-003			5.2000e-004								
2031					0.0252			3.8200e-003								
2034					2.6300e-003			4.0000e-004								
2035					0.0599			9.0700e-003								
Total					**0.5535**			**0.0838**								

2.1 Overall Construction

Mitigated Construction

	ROG	NOx	CO	SO2	Fugitive PM10	Exhaust PM10	PM10 Total	Fugitive PM2.5	Exhaust PM2.5	PM2.5 Total	Bio- CO2	NBio- CO2	Total CO2	CH4	N2O	CO2e
Year	tons/yr										MT/yr					
2017					0.0271			4.1100e-003								
2018					0.0257			3.8900e-003								
2019					0.0363			5.4900e-003								
2020					5.4300e-003			8.2000e-004								
2021					0.0000			0.0000								
2022					0.0000			0.0000								
2023					0.0000			0.0000								
2024					0.0836			0.0127								
2026					6.9000e-004			1.0000e-004								
2028					0.0000			0.0000								
2029					1.4500e-003			2.2000e-004								
2030					1.3400e-003			2.0000e-004								
2031					9.8300e-003			1.4900e-003								
2034					1.0200e-003			1.6000e-004								
2035					0.0234			3.5400e-003								
Total					**0.2159**			**0.0327**								

	ROG	NOx	CO	SO2	Fugitive PM10	Exhaust PM10	PM10 Total	Fugitive PM2.5	Exhaust PM2.5	PM2.5 Total	Bio- CO2	NBio-CO2	Total CO2	CH4	N20	CO2e
Percent Reduction	**0.00**	**0.00**	**0.00**	**0.00**	**61.00**	**0.00**	**0.00**	**61.01**	**0.00**	**0.00**	**0.00**	**0.00**	**0.00**	**0.00**	**0.00**	**0.00**

2.2 Overall Operational

Unmitigated Operational

	ROG	NOx	CO	SO2	Fugitive PM10	Exhaust PM10	PM10 Total	Fugitive PM2.5	Exhaust PM2.5	PM2.5 Total	Bio- CO2	NBio- CO2	Total CO2	CH4	N2O	CO2e
Category	tons/yr										MT/yr					
Area																
Energy																
Mobile					0.0000			0.0000								
Waste																
Water																
Total					**0.0000**			**0.0000**								

2.2 Overall Operational

Mitigated Operational

	ROG	NOx	CO	SO2	Fugitive PM10	Exhaust PM10	PM10 Total	Fugitive PM2.5	Exhaust PM2.5	PM2.5 Total	Bio- CO2	NBio- CO2	Total CO2	CH4	N2O	CO2e
Category	tons/yr										MT/yr					
Area																
Energy																
Mobile					0.0000			0.0000								
Waste																
Water																
Total					**0.0000**			**0.0000**								

	ROG	**NOx**	**CO**	**SO2**	**Fugitive PM10**	**Exhaust PM10**	**PM10 Total**	**Fugitive PM2.5**	**Exhaust PM2.5**	**PM2.5 Total**	**Bio- CO2**	**NBio-CO2**	**Total CO2**	**CH4**	**N20**	**CO2e**
Percent Reduction	**0.00**	**0.00**	**0.00**	**0.00**	**0.00**	**0.00**	**0.00**	**0.00**	**0.00**	**0.00**	**0.00**	**0.00**	**0.00**	**0.00**	**0.00**	**0.00**

3.0 Construction Detail

Construction Phase

Phase Number	Phase Name	Phase Type	Start Date	End Date	Num Days Week	Num Days	Phase Description
1	-3	Grading	1/1/2017	12/31/2017	6	312	
2	-2	Grading	1/1/2018	12/31/2018	6	313	
3	-1	Grading	1/1/2019	12/31/2019	6	313	
4	1	Grading	1/1/2020	12/31/2020	6	313	
5	2	Grading	1/1/2021	12/31/2021	6	313	
6	3	Grading	1/1/2022	12/31/2022	6	313	
7	4	Grading	1/1/2023	12/31/2023	6	313	
8	5	Grading	1/1/2024	12/31/2024	6	313	
9	7	Grading	1/1/2026	12/31/2026	6	313	
10	9	Grading	1/1/2028	12/31/2028	6	313	
11	10	Grading	1/1/2029	12/31/2029	6	313	
12	11	Grading	1/1/2030	12/31/2030	6	313	
13	12	Grading	1/1/2031	12/31/2031	6	313	
14	15	Grading	1/1/2034	12/31/2034	6	313	
15	16	Grading	1/1/2035	12/31/2035	6	313	

Acres of Grading (Site Preparation Phase): 0

Acres of Grading (Grading Phase): 0

Acres of Paving: 0

Residential Indoor: 0; Residential Outdoor: 0; Non-Residential Indoor: 0; Non-Residential Outdoor: 0 (Architectural Coating – sqft)

OffRoad Equipment

Phase Name	Offroad Equipment Type	Amount	Usage Hours	Horse Power	Load Factor

Trips and VMT

Phase Name	Offroad Equipment Count	Worker Trip Number	Vendor Trip Number	Hauling Trip Number	Worker Trip Length	Vendor Trip Length	Hauling Trip Length	Worker Vehicle Class	Vendor Vehicle Class	Hauling Vehicle Class
-3				0.00	12.30	4.60				
9				0.00	12.30	4.60				
10				0.00	12.30	4.60				
11				0.00	12.30	4.60				
12				0.00	12.30	4.60				
15				0.00	12.30	4.60				
16				0.00	12.30	4.60				
-2				0.00	12.30	4.60				
-1				0.00	12.30	4.60				
1				0.00	12.30	4.60				
2				0.00	12.30	4.60				
3				0.00	12.30	4.60				
4				0.00	12.30	4.60				
5				0.00	12.30	4.60				
7				0.00	12.30	4.60				

3.1 Mitigation Measures Construction

Water Exposed Area

Reduce Vehicle Speed on Unpaved Roads

3.2 -3 - 2017

Unmitigated Construction On-Site

	ROG	NOx	CO	SO2	Fugitive PM10	Exhaust PM10	PM10 Total	Fugitive PM2.5	Exhaust PM2.5	PM2.5 Total	Bio- CO2	NBio- CO2	Total CO2	CH4	N2O	CO2e
Category	tons/yr										MT/yr					
Fugitive Dust					0.0696			0.0105								
Total					**0.0696**			**0.0105**								

Unmitigated Construction Off-Site

	ROG	NOx	CO	SO2	Fugitive PM10	Exhaust PM10	PM10 Total	Fugitive PM2.5	Exhaust PM2.5	PM2.5 Total	Bio- CO2	NBio- CO2	Total CO2	CH4	N2O	CO2e
Category	tons/yr										MT/yr					
Hauling					0.0000			0.0000								
Vendor					0.0000			0.0000								
Worker					0.0000			0.0000								
Total					**0.0000**			**0.0000**								

3.2 -3 - 2017

Mitigated Construction On-Site

	ROG	NOx	CO	SO2	Fugitive PM10	Exhaust PM10	PM10 Total	Fugitive PM2.5	Exhaust PM2.5	PM2.5 Total	Bio- CO2	NBio- CO2	Total CO2	CH4	N2O	CO2e
Category	tons/yr										MT/yr					
Fugitive Dust					0.0271			4.1100e-003								
Total					**0.0271**			**4.1100e-003**								

Mitigated Construction Off-Site

	ROG	NOx	CO	SO2	Fugitive PM10	Exhaust PM10	PM10 Total	Fugitive PM2.5	Exhaust PM2.5	PM2.5 Total	Bio- CO2	NBio- CO2	Total CO2	CH4	N2O	CO2e
Category	tons/yr										MT/yr					
Hauling					0.0000			0.0000								
Vendor					0.0000			0.0000								
Worker					0.0000			0.0000								
Total					**0.0000**			**0.0000**								

3.3 -2 - 2018

Unmitigated Construction On-Site

	ROG	NOx	CO	SO2	Fugitive PM10	Exhaust PM10	PM10 Total	Fugitive PM2.5	Exhaust PM2.5	PM2.5 Total	Bio- CO2	NBio- CO2	Total CO2	CH4	N2O	CO2e
Category	tons/yr										MT/yr					
Fugitive Dust					0.0659			9.9800e-003								
Total					**0.0659**			**9.9800e-003**								

Unmitigated Construction Off-Site

	ROG	NOx	CO	SO2	Fugitive PM10	Exhaust PM10	PM10 Total	Fugitive PM2.5	Exhaust PM2.5	PM2.5 Total	Bio- CO2	NBio- CO2	Total CO2	CH4	N2O	CO2e
Category	tons/yr										MT/yr					
Hauling					0.0000			0.0000								
Vendor					0.0000			0.0000								
Worker					0.0000			0.0000								
Total					**0.0000**			**0.0000**								

3.3 -2 - 2018

Mitigated Construction On-Site

	ROG	NOx	CO	SO2	Fugitive PM10	Exhaust PM10	PM10 Total	Fugitive PM2.5	Exhaust PM2.5	PM2.5 Total	Bio- CO2	NBio- CO2	Total CO2	CH4	N2O	CO2e
Category	tons/yr										MT/yr					
Fugitive Dust					0.0257			3.8900e-003								
Total					**0.0257**			**3.8900e-003**								

Mitigated Construction Off-Site

	ROG	NOx	CO	SO2	Fugitive PM10	Exhaust PM10	PM10 Total	Fugitive PM2.5	Exhaust PM2.5	PM2.5 Total	Bio- CO2	NBio- CO2	Total CO2	CH4	N2O	CO2e
Category	tons/yr										MT/yr					
Hauling					0.0000			0.0000								
Vendor					0.0000			0.0000								
Worker					0.0000			0.0000								
Total					**0.0000**			**0.0000**								

3.4 -1 - 2019

Unmitigated Construction On-Site

	ROG	NOx	CO	SO2	Fugitive PM10	Exhaust PM10	PM10 Total	Fugitive PM2.5	Exhaust PM2.5	PM2.5 Total	Bio- CO2	NBio- CO2	Total CO2	CH4	N2O	CO2e
Category	tons/yr										MT/yr					
Fugitive Dust					0.0930			0.0141								
Total					**0.0930**			**0.0141**								

Unmitigated Construction Off-Site

	ROG	NOx	CO	SO2	Fugitive PM10	Exhaust PM10	PM10 Total	Fugitive PM2.5	Exhaust PM2.5	PM2.5 Total	Bio- CO2	NBio- CO2	Total CO2	CH4	N2O	CO2e
Category	tons/yr										MT/yr					
Hauling					0.0000			0.0000								
Vendor					0.0000			0.0000								
Worker					0.0000			0.0000								
Total					**0.0000**			**0.0000**								

3.4 -1 - 2019

Mitigated Construction On-Site

	ROG	NOx	CO	SO2	Fugitive PM10	Exhaust PM10	PM10 Total	Fugitive PM2.5	Exhaust PM2.5	PM2.5 Total	Bio- CO2	NBio- CO2	Total CO2	CH4	N2O	CO2e
Category	tons/yr										MT/yr					
Fugitive Dust					0.0363			5.4900e-003								
Total					**0.0363**			**5.4900e-003**								

Mitigated Construction Off-Site

	ROG	NOx	CO	SO2	Fugitive PM10	Exhaust PM10	PM10 Total	Fugitive PM2.5	Exhaust PM2.5	PM2.5 Total	Bio- CO2	NBio- CO2	Total CO2	CH4	N2O	CO2e
Category	tons/yr										MT/yr					
Hauling					0.0000			0.0000								
Vendor					0.0000			0.0000								
Worker					0.0000			0.0000								
Total					**0.0000**			**0.0000**								

3.5 1 - 2020

Unmitigated Construction On-Site

	ROG	NOx	CO	SO2	Fugitive PM10	Exhaust PM10	PM10 Total	Fugitive PM2.5	Exhaust PM2.5	PM2.5 Total	Bio- CO2	NBio- CO2	Total CO2	CH4	N2O	CO2e
Category	tons/yr										MT/yr					
Fugitive Dust					0.0139			2.1100e-003								
Total					**0.0139**			**2.1100e-003**								

Unmitigated Construction Off-Site

	ROG	NOx	CO	SO2	Fugitive PM10	Exhaust PM10	PM10 Total	Fugitive PM2.5	Exhaust PM2.5	PM2.5 Total	Bio- CO2	NBio- CO2	Total CO2	CH4	N2O	CO2e
Category	tons/yr										MT/yr					
Hauling					0.0000			0.0000								
Vendor					0.0000			0.0000								
Worker					0.0000			0.0000								
Total					**0.0000**			**0.0000**								

3.5 1 - 2020

Mitigated Construction On-Site

	ROG	NOx	CO	SO2	Fugitive PM10	Exhaust PM10	PM10 Total	Fugitive PM2.5	Exhaust PM2.5	PM2.5 Total	Bio- CO2	NBio- CO2	Total CO2	CH4	N2O	CO2e
Category	tons/yr										MT/yr					
Fugitive Dust					5.4300e-003			8.2000e-004								
Total					**5.4300e-003**			**8.2000e-004**								

Mitigated Construction Off-Site

	ROG	NOx	CO	SO2	Fugitive PM10	Exhaust PM10	PM10 Total	Fugitive PM2.5	Exhaust PM2.5	PM2.5 Total	Bio- CO2	NBio- CO2	Total CO2	CH4	N2O	CO2e
Category	tons/yr										MT/yr					
Hauling					0.0000			0.0000								
Vendor					0.0000			0.0000								
Worker					0.0000			0.0000								
Total					**0.0000**			**0.0000**								

3.6 2 - 2021

Unmitigated Construction On-Site

	ROG	NOx	CO	SO2	Fugitive PM10	Exhaust PM10	PM10 Total	Fugitive PM2.5	Exhaust PM2.5	PM2.5 Total	Bio- CO2	NBio- CO2	Total CO2	CH4	N2O	CO2e
Category	tons/yr										MT/yr					
Fugitive Dust					0.0000			0.0000								
Total					**0.0000**			**0.0000**								

Unmitigated Construction Off-Site

	ROG	NOx	CO	SO2	Fugitive PM10	Exhaust PM10	PM10 Total	Fugitive PM2.5	Exhaust PM2.5	PM2.5 Total	Bio- CO2	NBio- CO2	Total CO2	CH4	N2O	CO2e
Category	tons/yr										MT/yr					
Hauling					0.0000			0.0000								
Vendor					0.0000			0.0000								
Worker					0.0000			0.0000								
Total					**0.0000**			**0.0000**								

3.6 2 - 2021

Mitigated Construction On-Site

	ROG	NOx	CO	SO2	Fugitive PM10	Exhaust PM10	PM10 Total	Fugitive PM2.5	Exhaust PM2.5	PM2.5 Total	Bio- CO2	NBio- CO2	Total CO2	CH4	N2O	CO2e
Category	tons/yr										MT/yr					
Fugitive Dust					0.0000			0.0000								
Total					**0.0000**			**0.0000**								

Mitigated Construction Off-Site

	ROG	NOx	CO	SO2	Fugitive PM10	Exhaust PM10	PM10 Total	Fugitive PM2.5	Exhaust PM2.5	PM2.5 Total	Bio- CO2	NBio- CO2	Total CO2	CH4	N2O	CO2e
Category	tons/yr										MT/yr					
Hauling					0.0000			0.0000								
Vendor					0.0000			0.0000								
Worker					0.0000			0.0000								
Total					**0.0000**			**0.0000**								

3.7 3 - 2022

Unmitigated Construction On-Site

	ROG	NOx	CO	SO2	Fugitive PM10	Exhaust PM10	PM10 Total	Fugitive PM2.5	Exhaust PM2.5	PM2.5 Total	Bio- CO2	NBio- CO2	Total CO2	CH4	N2O	CO2e
Category	tons/yr										MT/yr					
Fugitive Dust					0.0000			0.0000								
Total					**0.0000**			**0.0000**								

Unmitigated Construction Off-Site

	ROG	NOx	CO	SO2	Fugitive PM10	Exhaust PM10	PM10 Total	Fugitive PM2.5	Exhaust PM2.5	PM2.5 Total	Bio- CO2	NBio- CO2	Total CO2	CH4	N2O	CO2e
Category	tons/yr										MT/yr					
Hauling					0.0000			0.0000								
Vendor					0.0000			0.0000								
Worker					0.0000			0.0000								
Total					**0.0000**			**0.0000**								

3.7 3 - 2022

Mitigated Construction On-Site

	ROG	NOx	CO	SO2	Fugitive PM10	Exhaust PM10	PM10 Total	Fugitive PM2.5	Exhaust PM2.5	PM2.5 Total	Bio- CO2	NBio- CO2	Total CO2	CH4	N2O	CO2e
Category	tons/yr										MT/yr					
Fugitive Dust					0.0000			0.0000								
Total					**0.0000**			**0.0000**								

Mitigated Construction Off-Site

	ROG	NOx	CO	SO2	Fugitive PM10	Exhaust PM10	PM10 Total	Fugitive PM2.5	Exhaust PM2.5	PM2.5 Total	Bio- CO2	NBio- CO2	Total CO2	CH4	N2O	CO2e
Category	tons/yr										MT/yr					
Hauling					0.0000			0.0000								
Vendor					0.0000			0.0000								
Worker					0.0000			0.0000								
Total					**0.0000**			**0.0000**								

3.8 4 - 2023

Unmitigated Construction On-Site

	ROG	NOx	CO	SO2	Fugitive PM10	Exhaust PM10	PM10 Total	Fugitive PM2.5	Exhaust PM2.5	PM2.5 Total	Bio- CO2	NBio- CO2	Total CO2	CH4	N2O	CO2e
Category	tons/yr										MT/yr					
Fugitive Dust					0.0000			0.0000								
Total					**0.0000**			**0.0000**								

Unmitigated Construction Off-Site

	ROG	NOx	CO	SO2	Fugitive PM10	Exhaust PM10	PM10 Total	Fugitive PM2.5	Exhaust PM2.5	PM2.5 Total	Bio- CO2	NBio- CO2	Total CO2	CH4	N2O	CO2e
Category	tons/yr										MT/yr					
Hauling					0.0000			0.0000								
Vendor					0.0000			0.0000								
Worker					0.0000			0.0000								
Total					**0.0000**			**0.0000**								

3.8 4 - 2023

Mitigated Construction On-Site

	ROG	NOx	CO	SO2	Fugitive PM10	Exhaust PM10	PM10 Total	Fugitive PM2.5	Exhaust PM2.5	PM2.5 Total	Bio- CO2	NBio- CO2	Total CO2	CH4	N2O	CO2e
Category	tons/yr										MT/yr					
Fugitive Dust					0.0000			0.0000								
Total					**0.0000**			**0.0000**								

Mitigated Construction Off-Site

	ROG	NOx	CO	SO2	Fugitive PM10	Exhaust PM10	PM10 Total	Fugitive PM2.5	Exhaust PM2.5	PM2.5 Total	Bio- CO2	NBio- CO2	Total CO2	CH4	N2O	CO2e
Category	tons/yr										MT/yr					
Hauling					0.0000			0.0000								
Vendor					0.0000			0.0000								
Worker					0.0000			0.0000								
Total					**0.0000**			**0.0000**								

3.9 5 - 2024

Unmitigated Construction On-Site

	ROG	NOx	CO	SO2	Fugitive PM10	Exhaust PM10	PM10 Total	Fugitive PM2.5	Exhaust PM2.5	PM2.5 Total	Bio- CO2	NBio- CO2	Total CO2	CH4	N2O	CO2e
Category	tons/yr										MT/yr					
Fugitive Dust					0.2144			0.0325								
Total					**0.2144**			**0.0325**								

Unmitigated Construction Off-Site

	ROG	NOx	CO	SO2	Fugitive PM10	Exhaust PM10	PM10 Total	Fugitive PM2.5	Exhaust PM2.5	PM2.5 Total	Bio- CO2	NBio- CO2	Total CO2	CH4	N2O	CO2e
Category	tons/yr										MT/yr					
Hauling					0.0000			0.0000								
Vendor					0.0000			0.0000								
Worker					0.0000			0.0000								
Total					**0.0000**			**0.0000**								

3.9 5 - 2024

Mitigated Construction On-Site

	ROG	NOx	CO	SO2	Fugitive PM10	Exhaust PM10	PM10 Total	Fugitive PM2.5	Exhaust PM2.5	PM2.5 Total	Bio- CO2	NBio- CO2	Total CO2	CH4	N2O	CO2e
Category	tons/yr										MT/yr					
Fugitive Dust					0.0836			0.0127								
Total					**0.0836**			**0.0127**								

Mitigated Construction Off-Site

	ROG	NOx	CO	SO2	Fugitive PM10	Exhaust PM10	PM10 Total	Fugitive PM2.5	Exhaust PM2.5	PM2.5 Total	Bio- CO2	NBio- CO2	Total CO2	CH4	N2O	CO2e
Category	tons/yr										MT/yr					
Hauling					0.0000			0.0000								
Vendor					0.0000			0.0000								
Worker					0.0000			0.0000								
Total					**0.0000**			**0.0000**								

3.10 7 - 2026

Unmitigated Construction On-Site

	ROG	NOx	CO	SO2	Fugitive PM10	Exhaust PM10	PM10 Total	Fugitive PM2.5	Exhaust PM2.5	PM2.5 Total	Bio- CO2	NBio- CO2	Total CO2	CH4	N2O	CO2e
Category	tons/yr										MT/yr					
Fugitive Dust					1.7700e-003			2.7000e-004								
Total					**1.7700e-003**			**2.7000e-004**								

Unmitigated Construction Off-Site

	ROG	NOx	CO	SO2	Fugitive PM10	Exhaust PM10	PM10 Total	Fugitive PM2.5	Exhaust PM2.5	PM2.5 Total	Bio- CO2	NBio- CO2	Total CO2	CH4	N2O	CO2e
Category	tons/yr										MT/yr					
Hauling					0.0000			0.0000								
Vendor					0.0000			0.0000								
Worker					0.0000			0.0000								
Total					**0.0000**			**0.0000**								

3.10 7 - 2026

Mitigated Construction On-Site

	ROG	NOx	CO	SO2	Fugitive PM10	Exhaust PM10	PM10 Total	Fugitive PM2.5	Exhaust PM2.5	PM2.5 Total	Bio- CO2	NBio- CO2	Total CO2	CH4	N2O	CO2e
Category	tons/yr										MT/yr					
Fugitive Dust					6.9000e-004			1.0000e-004								
Total					**6.9000e-004**			**1.0000e-004**								

Mitigated Construction Off-Site

	ROG	NOx	CO	SO2	Fugitive PM10	Exhaust PM10	PM10 Total	Fugitive PM2.5	Exhaust PM2.5	PM2.5 Total	Bio- CO2	NBio- CO2	Total CO2	CH4	N2O	CO2e
Category	tons/yr										MT/yr					
Hauling					0.0000			0.0000								
Vendor					0.0000			0.0000								
Worker					0.0000			0.0000								
Total					**0.0000**			**0.0000**								

3.11 9 - 2028

Unmitigated Construction On-Site

	ROG	NOx	CO	SO2	Fugitive PM10	Exhaust PM10	PM10 Total	Fugitive PM2.5	Exhaust PM2.5	PM2.5 Total	Bio- CO2	NBio- CO2	Total CO2	CH4	N2O	CO2e
Category	tons/yr										MT/yr					
Fugitive Dust					0.0000			0.0000								
Total					**0.0000**			**0.0000**								

Unmitigated Construction Off-Site

	ROG	NOx	CO	SO2	Fugitive PM10	Exhaust PM10	PM10 Total	Fugitive PM2.5	Exhaust PM2.5	PM2.5 Total	Bio- CO2	NBio- CO2	Total CO2	CH4	N2O	CO2e
Category	tons/yr										MT/yr					
Hauling					0.0000			0.0000								
Vendor					0.0000			0.0000								
Worker					0.0000			0.0000								
Total					**0.0000**			**0.0000**								

3.11 9 - 2028

Mitigated Construction On-Site

	ROG	NOx	CO	SO2	Fugitive PM10	Exhaust PM10	PM10 Total	Fugitive PM2.5	Exhaust PM2.5	PM2.5 Total	Bio- CO2	NBio- CO2	Total CO2	CH4	N2O	CO2e
Category	tons/yr										MT/yr					
Fugitive Dust					0.0000			0.0000								
Total					**0.0000**			**0.0000**								

Mitigated Construction Off-Site

	ROG	NOx	CO	SO2	Fugitive PM10	Exhaust PM10	PM10 Total	Fugitive PM2.5	Exhaust PM2.5	PM2.5 Total	Bio- CO2	NBio- CO2	Total CO2	CH4	N2O	CO2e
Category	tons/yr										MT/yr					
Hauling					0.0000			0.0000								
Vendor					0.0000			0.0000								
Worker					0.0000			0.0000								
Total					**0.0000**			**0.0000**								

3.12 10 - 2029

Unmitigated Construction On-Site

	ROG	NOx	CO	SO2	Fugitive PM10	Exhaust PM10	PM10 Total	Fugitive PM2.5	Exhaust PM2.5	PM2.5 Total	Bio- CO2	NBio- CO2	Total CO2	CH4	N2O	CO2e
Category	tons/yr										MT/yr					
Fugitive Dust					3.7200e-003			5.6000e-004								
Total					**3.7200e-003**			**5.6000e-004**								

Unmitigated Construction Off-Site

	ROG	NOx	CO	SO2	Fugitive PM10	Exhaust PM10	PM10 Total	Fugitive PM2.5	Exhaust PM2.5	PM2.5 Total	Bio- CO2	NBio- CO2	Total CO2	CH4	N2O	CO2e
Category	tons/yr										MT/yr					
Hauling					0.0000			0.0000								
Vendor					0.0000			0.0000								
Worker					0.0000			0.0000								
Total					**0.0000**			**0.0000**								

3.12 10 - 2029

Mitigated Construction On-Site

	ROG	NOx	CO	SO2	Fugitive PM10	Exhaust PM10	PM10 Total	Fugitive PM2.5	Exhaust PM2.5	PM2.5 Total	Bio- CO2	NBio- CO2	Total CO2	CH4	N2O	CO2e
Category	tons/yr										MT/yr					
Fugitive Dust					1.4500e-003			2.2000e-004								
Total					**1.4500e-003**			**2.2000e-004**								

Mitigated Construction Off-Site

	ROG	NOx	CO	SO2	Fugitive PM10	Exhaust PM10	PM10 Total	Fugitive PM2.5	Exhaust PM2.5	PM2.5 Total	Bio- CO2	NBio- CO2	Total CO2	CH4	N2O	CO2e
Category	tons/yr										MT/yr					
Hauling					0.0000			0.0000								
Vendor					0.0000			0.0000								
Worker					0.0000			0.0000								
Total					**0.0000**			**0.0000**								

3.13 11 - 2030

Unmitigated Construction On-Site

	ROG	NOx	CO	SO2	Fugitive PM10	Exhaust PM10	PM10 Total	Fugitive PM2.5	Exhaust PM2.5	PM2.5 Total	Bio- CO2	NBio- CO2	Total CO2	CH4	N2O	CO2e
Category	tons/yr										MT/yr					
Fugitive Dust					3.4200e-003			5.2000e-004								
Total					**3.4200e-003**			**5.2000e-004**								

Unmitigated Construction Off-Site

	ROG	NOx	CO	SO2	Fugitive PM10	Exhaust PM10	PM10 Total	Fugitive PM2.5	Exhaust PM2.5	PM2.5 Total	Bio- CO2	NBio- CO2	Total CO2	CH4	N2O	CO2e
Category	tons/yr										MT/yr					
Hauling					0.0000			0.0000								
Vendor					0.0000			0.0000								
Worker					0.0000			0.0000								
Total					**0.0000**			**0.0000**								

3.13 11 - 2030

Mitigated Construction On-Site

	ROG	NOx	CO	SO2	Fugitive PM10	Exhaust PM10	PM10 Total	Fugitive PM2.5	Exhaust PM2.5	PM2.5 Total	Bio- CO2	NBio- CO2	Total CO2	CH4	N2O	CO2e
Category	tons/yr										MT/yr					
Fugitive Dust					1.3400e-003			2.0000e-004								
Total					**1.3400e-003**			**2.0000e-004**								

Mitigated Construction Off-Site

	ROG	NOx	CO	SO2	Fugitive PM10	Exhaust PM10	PM10 Total	Fugitive PM2.5	Exhaust PM2.5	PM2.5 Total	Bio- CO2	NBio- CO2	Total CO2	CH4	N2O	CO2e
Category	tons/yr										MT/yr					
Hauling					0.0000			0.0000								
Vendor					0.0000			0.0000								
Worker					0.0000			0.0000								
Total					**0.0000**			**0.0000**								

3.14 12 - 2031

Unmitigated Construction On-Site

	ROG	NOx	CO	SO2	Fugitive PM10	Exhaust PM10	PM10 Total	Fugitive PM2.5	Exhaust PM2.5	PM2.5 Total	Bio- CO2	NBio- CO2	Total CO2	CH4	N2O	CO2e
Category	tons/yr										MT/yr					
Fugitive Dust					0.0252			3.8200e-003								
Total					**0.0252**			**3.8200e-003**								

Unmitigated Construction Off-Site

	ROG	NOx	CO	SO2	Fugitive PM10	Exhaust PM10	PM10 Total	Fugitive PM2.5	Exhaust PM2.5	PM2.5 Total	Bio- CO2	NBio- CO2	Total CO2	CH4	N2O	CO2e
Category	tons/yr										MT/yr					
Hauling					0.0000			0.0000								
Vendor					0.0000			0.0000								
Worker					0.0000			0.0000								
Total					**0.0000**			**0.0000**								

3.14 12 - 2031

Mitigated Construction On-Site

	ROG	NOx	CO	SO2	Fugitive PM10	Exhaust PM10	PM10 Total	Fugitive PM2.5	Exhaust PM2.5	PM2.5 Total	Bio- CO2	NBio- CO2	Total CO2	CH4	N2O	CO2e
Category	tons/yr										MT/yr					
Fugitive Dust					9.8300e-003			1.4900e-003								
Total					**9.8300e-003**			**1.4900e-003**								

Mitigated Construction Off-Site

	ROG	NOx	CO	SO2	Fugitive PM10	Exhaust PM10	PM10 Total	Fugitive PM2.5	Exhaust PM2.5	PM2.5 Total	Bio- CO2	NBio- CO2	Total CO2	CH4	N2O	CO2e
Category	tons/yr										MT/yr					
Hauling					0.0000			0.0000								
Vendor					0.0000			0.0000								
Worker					0.0000			0.0000								
Total					**0.0000**			**0.0000**								

3.15 15 - 2034

Unmitigated Construction On-Site

	ROG	NOx	CO	SO2	Fugitive PM10	Exhaust PM10	PM10 Total	Fugitive PM2.5	Exhaust PM2.5	PM2.5 Total	Bio- CO2	NBio- CO2	Total CO2	CH4	N2O	CO2e
Category	tons/yr										MT/yr					
Fugitive Dust					2.6300e-003			4.0000e-004								
Total					**2.6300e-003**			**4.0000e-004**								

Unmitigated Construction Off-Site

	ROG	NOx	CO	SO2	Fugitive PM10	Exhaust PM10	PM10 Total	Fugitive PM2.5	Exhaust PM2.5	PM2.5 Total	Bio- CO2	NBio- CO2	Total CO2	CH4	N2O	CO2e
Category	tons/yr										MT/yr					
Hauling					0.0000			0.0000								
Vendor					0.0000			0.0000								
Worker					0.0000			0.0000								
Total					**0.0000**			**0.0000**								

3.15 15 - 2034

Mitigated Construction On-Site

	ROG	NOx	CO	SO2	Fugitive PM10	Exhaust PM10	PM10 Total	Fugitive PM2.5	Exhaust PM2.5	PM2.5 Total	Bio- CO2	NBio- CO2	Total CO2	CH4	N2O	CO2e
Category	tons/yr										MT/yr					
Fugitive Dust					1.0200e-003			1.6000e-004								
Total					**1.0200e-003**			**1.6000e-004**								

Mitigated Construction Off-Site

	ROG	NOx	CO	SO2	Fugitive PM10	Exhaust PM10	PM10 Total	Fugitive PM2.5	Exhaust PM2.5	PM2.5 Total	Bio- CO2	NBio- CO2	Total CO2	CH4	N2O	CO2e
Category	tons/yr										MT/yr					
Hauling					0.0000			0.0000								
Vendor					0.0000			0.0000								
Worker					0.0000			0.0000								
Total					**0.0000**			**0.0000**								

3.16 16 - 2035

Unmitigated Construction On-Site

	ROG	NOx	CO	SO2	Fugitive PM10	Exhaust PM10	PM10 Total	Fugitive PM2.5	Exhaust PM2.5	PM2.5 Total	Bio- CO2	NBio- CO2	Total CO2	CH4	N2O	CO2e
Category	tons/yr										MT/yr					
Fugitive Dust					0.0599			9.0700e-003								
Total					**0.0599**			**9.0700e-003**								

Unmitigated Construction Off-Site

	ROG	NOx	CO	SO2	Fugitive PM10	Exhaust PM10	PM10 Total	Fugitive PM2.5	Exhaust PM2.5	PM2.5 Total	Bio- CO2	NBio- CO2	Total CO2	CH4	N2O	CO2e
Category	tons/yr										MT/yr					
Hauling					0.0000			0.0000								
Vendor					0.0000			0.0000								
Worker					0.0000			0.0000								
Total					**0.0000**			**0.0000**								

3.16 16 - 2035

Mitigated Construction On-Site

	ROG	NOx	CO	SO2	Fugitive PM10	Exhaust PM10	PM10 Total	Fugitive PM2.5	Exhaust PM2.5	PM2.5 Total	Bio- CO2	NBio- CO2	Total CO2	CH4	N2O	CO2e
Category	tons/yr										MT/yr					
Fugitive Dust					0.0234			3.5400e-003								
Total					**0.0234**			**3.5400e-003**								

Mitigated Construction Off-Site

	ROG	NOx	CO	SO2	Fugitive PM10	Exhaust PM10	PM10 Total	Fugitive PM2.5	Exhaust PM2.5	PM2.5 Total	Bio- CO2	NBio- CO2	Total CO2	CH4	N2O	CO2e
Category	tons/yr										MT/yr					
Hauling					0.0000			0.0000								
Vendor					0.0000			0.0000								
Worker					0.0000			0.0000								
Total					**0.0000**			**0.0000**								

4.0 Operational Detail - Mobile

AERA - Santa Barbara - Cat Canyon Drilling Equipment Emission Calculations Years All

Santa Barbara-North of Santa Ynez County, Annual

1.0 Project Characteristics

1.1 Land Usage

Land Uses	Size	Metric	Lot Acreage	Floor Surface Area	Population
User Defined Industrial	2,100.00	User Defined Unit	2,100.00	0.00	0

1.2 Other Project Characteristics

Urbanization	Rural	**Wind Speed (m/s)**	3.1	**Precipitation Freq (Days)**	37
Climate Zone	4			**Operational Year**	2035
Utility Company	Pacific Gas & Electric Company				
CO2 Intensity (lb/MWhr)	641.35	**CH4 Intensity (lb/MWhr)**	0.029	**N2O Intensity (lb/MWhr)**	0.006

1.3 User Entered Comments & Non-Default Data

Project Characteristics -

Land Use - The project will be located in the East Cat Canyon oil field on approximately 2,100 acres.

Construction Phase - Anticipated Construction Schedule Provided by the Project Applicant.

Off-road Equipment - Units and Hours/day provided by Project Applicant. HP were adjusted whenever data was available for the size of the equipment provided by the applicant.

Off-road Equipment - Units and Hours/day provided by Project Applicant. HP were adjusted whenever data was available for the size of the equipment provided by the applicant.

Off-road Equipment - Units and Hours/day provided by Project Applicant. HP were adjusted whenever data was available for the size of the equipment provided by the applicant.

Off-road Equipment - Units and Hours/day provided by Project Applicant. HP were adjusted whenever data was available for the size of the equipment provided by the applicant.

Off-road Equipment - Units and Hours/day provided by Project Applicant. HP were adjusted whenever data was available for the size of the equipment provided by the applicant.

Off-road Equipment - Units and Hours/day provided by Project Applicant. HP were adjusted whenever data was available for the size of the equipment provided by the applicant.

Off-road Equipment - Units and Hours/day provided by Project Applicant. HP were adjusted whenever data was available for the size of the equipment provided by the applicant.

Off-road Equipment - Units and Hours/day provided by Project Applicant. HP were adjusted whenever data was available for the size of the equipment provided by the applicant.

Off-road Equipment - Units and Hours/day provided by Project Applicant. HP were adjusted whenever data was available for the size of the equipment provided by the applicant.

Off-road Equipment - Units and Hours/day provided by Project Applicant. HP were adjusted whenever data was available for the size of the equipment provided by the applicant.

Off-road Equipment - Units and Hours/day provided by Project Applicant. HP were adjusted whenever data was available for the size of the equipment provided by the applicant.

Off-road Equipment - Units and Hours/day provided by Project Applicant. HP were adjusted whenever data was available for the size of the equipment provided by the applicant.

Off-road Equipment - Units and Hours/day provided by Project Applicant. HP were adjusted whenever data was available for the size of the equipment provided by the applicant.

Off-road Equipment - Units and Hours/day provided by Project Applicant. HP were adjusted whenever data was available for the size of the equipment provided by the applicant.

Off-road Equipment - Units and Hours/day provided by Project Applicant. HP were adjusted whenever data was available for the size of the equipment provided by the applicant.

Off-road Equipment - Units and Hours/day provided by Project Applicant. HP were adjusted whenever data was available for the size of the equipment provided by the applicant.

Off-road Equipment - Units and Hours/day provided by Project Applicant. HP were adjusted whenever data was available for the size of the equipment provided by the applicant.

Off-road Equipment - Units and Hours/day provided by Project Applicant. HP were adjusted whenever data was available for the size of the equipment provided by the applicant.

Off-road Equipment - Units and Hours/day provided by Project Applicant. HP were adjusted whenever data was available for the size of the equipment provided by the applicant.

Off-road Equipment - Units and Hours/day provided by Project Applicant. HP were adjusted whenever data was available for the size of the equipment provided by the applicant.

Off-road Equipment - Units and Hours/day provided by Project Applicant. HP were adjusted whenever data was available for the size of the equipment provided by the applicant.

Off-road Equipment - Units and Hours/day provided by Project Applicant. HP were adjusted whenever data was available for the size of the equipment provided by the applicant.

Off-road Equipment - Units and Hours/day provided by Project Applicant. HP were adjusted whenever data was available for the size of the equipment provided by the applicant.

Off-road Equipment - Units and Hours/day provided by Project Applicant. HP were adjusted whenever data was available for the size of the equipment provided

by the applicant.
Off-road Equipment - Units and Hours/day provided by Project Applicant. HP were adjusted whenever data was available for the size of the equipment provided by the applicant.

Off-road Equipment - Units and Hours/day provided by Project Applicant. HP were adjusted whenever data was available for the size of the equipment provided by the applicant.

Off-road Equipment - Units and Hours/day provided by Project Applicant. HP were adjusted whenever data was available for the size of the equipment provided by the applicant.

Off-road Equipment - Units and Hours/day provided by Project Applicant. HP were adjusted whenever data was available for the size of the equipment provided by the applicant.

Off-road Equipment - Units and Hours/day provided by Project Applicant. HP were adjusted whenever data was available for the size of the equipment provided by the applicant.

Off-road Equipment - Units and Hours/day provided by Project Applicant. HP were adjusted whenever data was available for the size of the equipment provided by the applicant.

Trips and VMT - Employee Trips are included in the offsite calculations.

On-road Fugitive Dust -

Vehicle Trips - Construction Run Only

Vechicle Emission Factors -

Vechicle Emission Factors -

Vechicle Emission Factors -

Road Dust -

Consumer Products - Construction Run Only

Landscape Equipment - Construction Run Only

Construction Off-road Equipment Mitigation - Using Tier 4 Engines to Mitigate Construction Emissions

Area Coating -

Table Name	Column Name	Default Value	New Value
tblAreaCoating	ReapplicationRatePercent	10	0
tblConstEquipMitigation	NumberOfEquipmentMitigated	0.00	62.00
tblConstEquipMitigation	NumberOfEquipmentMitigated	0.00	88.00
tblConstEquipMitigation	NumberOfEquipmentMitigated	0.00	312.00
tblConstEquipMitigation	NumberOfEquipmentMitigated	0.00	31.00
tblConstEquipMitigation	NumberOfEquipmentMitigated	0.00	31.00

tblConstEquipMitigation	Tier	No Change	Tier 4 Final
tblConstEquipMitigation	Tier	No Change	Tier 4 Final
tblConstEquipMitigation	Tier	No Change	Tier 4 Final
tblConstEquipMitigation	Tier	No Change	Tier 4 Final
tblConstEquipMitigation	Tier	No Change	Tier 4 Final
tblConstructionPhase	NumDays	155,000.00	313.00
tblConstructionPhase	NumDays	155,000.00	52.00
tblConstructionPhase	NumDays	155,000.00	105.00
tblConstructionPhase	NumDays	155,000.00	184.00
tblConstructionPhase	NumDays	155,000.00	158.00
tblConstructionPhase	NumDays	155,000.00	130.00
tblConstructionPhase	NumDays	155,000.00	52.00
tblConstructionPhase	NumDays	155,000.00	131.00
tblConstructionPhase	NumDays	155,000.00	158.00
tblConstructionPhase	NumDays	155,000.00	210.00
tblConstructionPhase	NumDays	155,000.00	79.00
tblConstructionPhase	NumDays	155,000.00	314.00
tblConstructionPhase	NumDays	155,000.00	78.00
tblConstructionPhase	NumDays	155,000.00	78.00
tblConstructionPhase	NumDays	155,000.00	79.00
tblConstructionPhase	NumDays	155,000.00	79.00
tblConstructionPhase	NumDays	155,000.00	79.00
tblConstructionPhase	NumDays	155,000.00	79.00
tblConstructionPhase	NumDays	155,000.00	79.00
tblConstructionPhase	NumDays	155,000.00	79.00
tblConstructionPhase	NumDays	155,000.00	79.00
tblConstructionPhase	NumDays	155,000.00	79.00
tblConstructionPhase	NumDays	155,000.00	26.00

tblConstructionPhase	NumDays	155,000.00	79.00
tblConstructionPhase	NumDays	155,000.00	79.00
tblConstructionPhase	NumDays	155,000.00	26.00
tblConstructionPhase	NumDays	155,000.00	26.00
tblConstructionPhase	NumDays	155,000.00	314.00
tblConstructionPhase	NumDays	155,000.00	184.00
tblConstructionPhase	NumDays	155,000.00	106.00
tblConstructionPhase	NumDays	155,000.00	52.00
tblConstructionPhase	NumDaysWeek	5.00	6.00
tblConstructionPhase	NumDaysWeek	5.00	6.00
tblConstructionPhase	NumDaysWeek	5.00	6.00
tblConstructionPhase	NumDaysWeek	5.00	6.00
tblConstructionPhase	NumDaysWeek	5.00	6.00
tblConstructionPhase	NumDaysWeek	5.00	6.00
tblConstructionPhase	NumDaysWeek	5.00	6.00
tblConstructionPhase	NumDaysWeek	5.00	6.00
tblConstructionPhase	NumDaysWeek	5.00	6.00
tblConstructionPhase	NumDaysWeek	5.00	6.00
tblConstructionPhase	NumDaysWeek	5.00	6.00
tblConstructionPhase	NumDaysWeek	5.00	6.00
tblConstructionPhase	NumDaysWeek	5.00	6.00
tblConstructionPhase	NumDaysWeek	5.00	6.00
tblConstructionPhase	NumDaysWeek	5.00	6.00
tblConstructionPhase	NumDaysWeek	5.00	6.00
tblConstructionPhase	NumDaysWeek	5.00	6.00
tblConstructionPhase	NumDaysWeek	5.00	6.00
tblConstructionPhase	NumDaysWeek	5.00	6.00

tblConstructionPhase	NumDaysWeek	5.00	6.00
tblConstructionPhase	NumDaysWeek	5.00	6.00
tblConstructionPhase	NumDaysWeek	5.00	6.00
tblConstructionPhase	NumDaysWeek	5.00	6.00
tblConstructionPhase	NumDaysWeek	5.00	6.00
tblConstructionPhase	NumDaysWeek	5.00	6.00
tblConstructionPhase	NumDaysWeek	5.00	6.00
tblConstructionPhase	NumDaysWeek	5.00	6.00
tblConstructionPhase	NumDaysWeek	5.00	6.00
tblConstructionPhase	NumDaysWeek	5.00	6.00
tblConstructionPhase	PhaseEndDate	12/30/2027	10/31/2028
tblConstructionPhase	PhaseEndDate	3/2/2029	10/31/2029
tblConstructionPhase	PhaseEndDate	6/3/2030	10/31/2030
tblConstructionPhase	PhaseEndDate	5/3/2031	10/31/2031
tblConstructionPhase	PhaseEndDate	3/31/2032	10/29/2032
tblConstructionPhase	PhaseEndDate	12/29/2032	10/31/2033
tblConstructionPhase	PhaseEndDate	4/1/2034	10/31/2034
tblConstructionPhase	PhaseEndDate	5/3/2035	10/31/2035
tblConstructionPhase	PhaseEndDate	7/2/2036	10/31/2036
tblConstructionPhase	PhaseEndDate	1/31/2037	10/31/2037
tblConstructionPhase	PhaseEndDate	1/30/2038	10/30/2038
tblConstructionPhase	PhaseEndDate	1/29/2039	10/29/2039
tblConstructionPhase	PhaseEndDate	1/30/2040	10/31/2040
tblConstructionPhase	PhaseEndDate	1/31/2041	10/31/2041
tblConstructionPhase	PhaseEndDate	1/31/2042	10/31/2042
tblConstructionPhase	PhaseEndDate	1/31/2043	10/31/2043
tblConstructionPhase	PhaseEndDate	2/1/2044	10/31/2044

tblConstructionPhase	PhaseEndDate	1/31/2045	10/31/2045
tblConstructionPhase	PhaseEndDate	1/31/2046	10/31/2046
tblConstructionPhase	PhaseEndDate	1/31/2047	10/31/2047
tblConstructionPhase	PhaseEndDate	1/30/2021	10/30/2021
tblConstructionPhase	PhaseEndDate	1/31/2048	10/31/2048
tblConstructionPhase	PhaseEndDate	2/1/2049	10/31/2049
tblConstructionPhase	PhaseEndDate	11/30/2021	10/31/2022
tblConstructionPhase	PhaseEndDate	11/30/2022	10/31/2023
tblConstructionPhase	PhaseEndDate	10/31/2024	12/31/2024
tblConstructionPhase	PhaseEndDate	8/2/2025	10/31/2025
tblConstructionPhase	PhaseEndDate	3/4/2026	10/31/2026
tblConstructionPhase	PhaseEndDate	12/31/2026	10/30/2027
tblConstructionPhase	PhaseStartDate	10/31/2027	9/1/2028
tblConstructionPhase	PhaseStartDate	11/1/2028	7/1/2029
tblConstructionPhase	PhaseStartDate	11/1/2029	4/1/2030
tblConstructionPhase	PhaseStartDate	11/1/2030	5/1/2031
tblConstructionPhase	PhaseStartDate	11/1/2031	6/1/2032
tblConstructionPhase	PhaseStartDate	10/30/2032	9/1/2033
tblConstructionPhase	PhaseStartDate	11/1/2033	6/1/2034
tblConstructionPhase	PhaseStartDate	11/1/2034	5/1/2035
tblConstructionPhase	PhaseStartDate	11/1/2035	3/1/2036
tblConstructionPhase	PhaseStartDate	11/1/2036	8/1/2037
tblConstructionPhase	PhaseStartDate	11/1/2037	8/1/2038
tblConstructionPhase	PhaseStartDate	10/31/2038	8/1/2039
tblConstructionPhase	PhaseStartDate	10/30/2039	8/1/2040
tblConstructionPhase	PhaseStartDate	11/1/2040	8/1/2041
tblConstructionPhase	PhaseStartDate	11/1/2041	8/1/2042
tblConstructionPhase	PhaseStartDate	11/1/2042	8/1/2043

tblConstructionPhase	PhaseStartDate	11/1/2043	8/1/2044
tblConstructionPhase	PhaseStartDate	11/1/2044	8/1/2045
tblConstructionPhase	PhaseStartDate	11/1/2045	8/1/2046
tblConstructionPhase	PhaseStartDate	11/1/2046	8/1/2047
tblConstructionPhase	PhaseStartDate	1/1/2021	10/1/2021
tblConstructionPhase	PhaseStartDate	11/1/2047	8/1/2048
tblConstructionPhase	PhaseStartDate	11/1/2048	8/1/2049
tblConstructionPhase	PhaseStartDate	10/31/2021	10/1/2022
tblConstructionPhase	PhaseStartDate	11/1/2022	10/1/2023
tblConstructionPhase	PhaseStartDate	11/1/2023	1/1/2024
tblConstructionPhase	PhaseStartDate	1/1/2025	4/1/2025
tblConstructionPhase	PhaseStartDate	11/1/2025	7/1/2026
tblConstructionPhase	PhaseStartDate	11/1/2026	9/1/2027
tblLandUse	LotAcreage	0.00	2,100.00
tblOffRoadEquipment	HorsePower	226.00	38.00
tblOffRoadEquipment	HorsePower	226.00	240.00
tblOffRoadEquipment	HorsePower	226.00	38.00
tblOffRoadEquipment	HorsePower	226.00	240.00
tblOffRoadEquipment	HorsePower	226.00	38.00
tblOffRoadEquipment	HorsePower	226.00	240.00
tblOffRoadEquipment	HorsePower	226.00	38.00
tblOffRoadEquipment	HorsePower	226.00	240.00
tblOffRoadEquipment	HorsePower	226.00	38.00
tblOffRoadEquipment	HorsePower	226.00	240.00
tblOffRoadEquipment	HorsePower	226.00	38.00
tblOffRoadEquipment	HorsePower	226.00	240.00
tblOffRoadEquipment	HorsePower	226.00	38.00
tblOffRoadEquipment	HorsePower	226.00	240.00

tblOffRoadEquipment	HorsePower	226.00	38.00
tblOffRoadEquipment	HorsePower	226.00	240.00
tblOffRoadEquipment	HorsePower	226.00	38.00
tblOffRoadEquipment	HorsePower	226.00	240.00
tblOffRoadEquipment	HorsePower	226.00	38.00
tblOffRoadEquipment	HorsePower	226.00	240.00
tblOffRoadEquipment	HorsePower	226.00	38.00
tblOffRoadEquipment	HorsePower	226.00	240.00
tblOffRoadEquipment	HorsePower	226.00	38.00
tblOffRoadEquipment	HorsePower	226.00	240.00
tblOffRoadEquipment	HorsePower	226.00	38.00
tblOffRoadEquipment	HorsePower	226.00	240.00
tblOffRoadEquipment	HorsePower	226.00	38.00
tblOffRoadEquipment	HorsePower	226.00	240.00
tblOffRoadEquipment	HorsePower	226.00	38.00
tblOffRoadEquipment	HorsePower	226.00	240.00
tblOffRoadEquipment	HorsePower	226.00	38.00
tblOffRoadEquipment	HorsePower	226.00	240.00
tblOffRoadEquipment	HorsePower	226.00	38.00
tblOffRoadEquipment	HorsePower	226.00	240.00
tblOffRoadEquipment	HorsePower	226.00	38.00
tblOffRoadEquipment	HorsePower	226.00	240.00
tblOffRoadEquipment	HorsePower	226.00	38.00
tblOffRoadEquipment	HorsePower	226.00	240.00
tblOffRoadEquipment	HorsePower	226.00	38.00
tblOffRoadEquipment	HorsePower	226.00	240.00

tblOffRoadEquipment	HorsePower	226.00	38.00
tblOffRoadEquipment	HorsePower	226.00	240.00
tblOffRoadEquipment	HorsePower	226.00	38.00
tblOffRoadEquipment	HorsePower	226.00	240.00
tblOffRoadEquipment	HorsePower	226.00	38.00
tblOffRoadEquipment	HorsePower	226.00	240.00
tblOffRoadEquipment	HorsePower	226.00	38.00
tblOffRoadEquipment	HorsePower	226.00	240.00
tblOffRoadEquipment	HorsePower	226.00	38.00
tblOffRoadEquipment	HorsePower	226.00	240.00
tblOffRoadEquipment	HorsePower	226.00	38.00
tblOffRoadEquipment	HorsePower	226.00	240.00
tblOffRoadEquipment	HorsePower	226.00	38.00
tblOffRoadEquipment	HorsePower	226.00	240.00
tblOffRoadEquipment	HorsePower	226.00	38.00
tblOffRoadEquipment	HorsePower	226.00	240.00
tblOffRoadEquipment	HorsePower	226.00	38.00
tblOffRoadEquipment	HorsePower	226.00	240.00
tblOffRoadEquipment	HorsePower	226.00	38.00
tblOffRoadEquipment	HorsePower	226.00	240.00
tblOffRoadEquipment	HorsePower	84.00	600.00
tblOffRoadEquipment	HorsePower	84.00	550.00
tblOffRoadEquipment	HorsePower	84.00	600.00
tblOffRoadEquipment	HorsePower	84.00	550.00
tblOffRoadEquipment	HorsePower	84.00	600.00
tblOffRoadEquipment	HorsePower	84.00	550.00
tblOffRoadEquipment	HorsePower	84.00	600.00
tblOffRoadEquipment	HorsePower	84.00	550.00

tblOffRoadEquipment	HorsePower	84.00	600.00
tblOffRoadEquipment	HorsePower	84.00	550.00
tblOffRoadEquipment	HorsePower	84.00	600.00
tblOffRoadEquipment	HorsePower	84.00	550.00
tblOffRoadEquipment	HorsePower	84.00	600.00
tblOffRoadEquipment	HorsePower	84.00	550.00
tblOffRoadEquipment	HorsePower	84.00	600.00
tblOffRoadEquipment	HorsePower	84.00	550.00
tblOffRoadEquipment	HorsePower	84.00	600.00
tblOffRoadEquipment	HorsePower	84.00	550.00
tblOffRoadEquipment	HorsePower	84.00	600.00
tblOffRoadEquipment	HorsePower	84.00	550.00
tblOffRoadEquipment	HorsePower	84.00	600.00
tblOffRoadEquipment	HorsePower	84.00	550.00
tblOffRoadEquipment	HorsePower	84.00	600.00
tblOffRoadEquipment	HorsePower	84.00	550.00
tblOffRoadEquipment	HorsePower	84.00	600.00
tblOffRoadEquipment	HorsePower	84.00	550.00
tblOffRoadEquipment	HorsePower	84.00	600.00
tblOffRoadEquipment	HorsePower	84.00	550.00
tblOffRoadEquipment	HorsePower	84.00	600.00
tblOffRoadEquipment	HorsePower	84.00	550.00
tblOffRoadEquipment	HorsePower	84.00	600.00
tblOffRoadEquipment	HorsePower	84.00	550.00

tblOffRoadEquipment	HorsePower	84.00	600.00
tblOffRoadEquipment	HorsePower	84.00	550.00
tblOffRoadEquipment	HorsePower	84.00	600.00
tblOffRoadEquipment	HorsePower	84.00	550.00
tblOffRoadEquipment	HorsePower	84.00	600.00
tblOffRoadEquipment	HorsePower	84.00	550.00
tblOffRoadEquipment	HorsePower	84.00	600.00
tblOffRoadEquipment	HorsePower	84.00	550.00
tblOffRoadEquipment	HorsePower	84.00	600.00
tblOffRoadEquipment	HorsePower	84.00	550.00
tblOffRoadEquipment	HorsePower	84.00	600.00
tblOffRoadEquipment	HorsePower	84.00	550.00
tblOffRoadEquipment	HorsePower	84.00	600.00
tblOffRoadEquipment	HorsePower	84.00	550.00
tblOffRoadEquipment	HorsePower	84.00	600.00
tblOffRoadEquipment	HorsePower	84.00	550.00
tblOffRoadEquipment	HorsePower	84.00	600.00
tblOffRoadEquipment	HorsePower	84.00	550.00
tblOffRoadEquipment	HorsePower	84.00	600.00
tblOffRoadEquipment	HorsePower	84.00	550.00
tblOffRoadEquipment	HorsePower	84.00	600.00
tblOffRoadEquipment	HorsePower	84.00	550.00
tblOffRoadEquipment	HorsePower	84.00	600.00
tblOffRoadEquipment	HorsePower	84.00	550.00
tblOffRoadEquipment	HorsePower	97.00	100.00
tblOffRoadEquipment	HorsePower	97.00	100.00

tblOffRoadEquipment	HorsePower	97.00	100.00
tblOffRoadEquipment	HorsePower	97.00	100.00
tblOffRoadEquipment	HorsePower	97.00	100.00
tblOffRoadEquipment	HorsePower	97.00	100.00
tblOffRoadEquipment	HorsePower	97.00	100.00
tblOffRoadEquipment	HorsePower	97.00	100.00
tblOffRoadEquipment	HorsePower	97.00	100.00
tblOffRoadEquipment	HorsePower	97.00	100.00
tblOffRoadEquipment	HorsePower	97.00	100.00
tblOffRoadEquipment	HorsePower	97.00	100.00
tblOffRoadEquipment	HorsePower	97.00	100.00
tblOffRoadEquipment	HorsePower	97.00	100.00
tblOffRoadEquipment	HorsePower	97.00	100.00
tblOffRoadEquipment	HorsePower	97.00	100.00
tblOffRoadEquipment	HorsePower	97.00	100.00
tblOffRoadEquipment	HorsePower	97.00	100.00
tblOffRoadEquipment	HorsePower	97.00	100.00
tblOffRoadEquipment	HorsePower	97.00	100.00
tblOffRoadEquipment	HorsePower	97.00	100.00
tblOffRoadEquipment	HorsePower	97.00	100.00
tblOffRoadEquipment	HorsePower	97.00	100.00
tblOffRoadEquipment	HorsePower	97.00	100.00
tblOffRoadEquipment	HorsePower	97.00	100.00
tblOffRoadEquipment	HorsePower	97.00	100.00
tblOffRoadEquipment	HorsePower	97.00	100.00

tblOffRoadEquipment	HorsePower	97.00	100.00
tblOffRoadEquipment	HorsePower	46.00	42.00
tblOffRoadEquipment	HorsePower	46.00	42.00
tblOffRoadEquipment	HorsePower	46.00	42.00
tblOffRoadEquipment	HorsePower	46.00	42.00
tblOffRoadEquipment	HorsePower	46.00	42.00
tblOffRoadEquipment	HorsePower	46.00	42.00
tblOffRoadEquipment	HorsePower	46.00	42.00
tblOffRoadEquipment	HorsePower	46.00	42.00
tblOffRoadEquipment	HorsePower	46.00	42.00
tblOffRoadEquipment	HorsePower	46.00	42.00
tblOffRoadEquipment	HorsePower	46.00	42.00
tblOffRoadEquipment	HorsePower	46.00	42.00
tblOffRoadEquipment	HorsePower	46.00	42.00
tblOffRoadEquipment	HorsePower	46.00	42.00
tblOffRoadEquipment	HorsePower	46.00	42.00
tblOffRoadEquipment	HorsePower	46.00	42.00
tblOffRoadEquipment	HorsePower	46.00	42.00
tblOffRoadEquipment	HorsePower	46.00	42.00
tblOffRoadEquipment	HorsePower	46.00	42.00
tblOffRoadEquipment	HorsePower	46.00	42.00
tblOffRoadEquipment	HorsePower	46.00	42.00
tblOffRoadEquipment	HorsePower	46.00	42.00
tblOffRoadEquipment	HorsePower	46.00	42.00
tblOffRoadEquipment	HorsePower	46.00	42.00
tblOffRoadEquipment	HorsePower	46.00	42.00

tblOffRoadEquipment	HorsePower	46.00	42.00
tblOffRoadEquipment	HorsePower	46.00	42.00
tblOffRoadEquipment	HorsePower	46.00	42.00
tblOffRoadEquipment	HorsePower	46.00	42.00
tblOffRoadEquipment	HorsePower	171.00	210.00
tblOffRoadEquipment	HorsePower	171.00	210.00
tblOffRoadEquipment	HorsePower	171.00	180.00
tblOffRoadEquipment	HorsePower	171.00	475.00
tblOffRoadEquipment	HorsePower	171.00	180.00
tblOffRoadEquipment	HorsePower	171.00	385.00
tblOffRoadEquipment	HorsePower	171.00	630.00
tblOffRoadEquipment	HorsePower	171.00	365.00
tblOffRoadEquipment	HorsePower	171.00	245.00
tblOffRoadEquipment	HorsePower	171.00	210.00
tblOffRoadEquipment	HorsePower	171.00	210.00
tblOffRoadEquipment	HorsePower	171.00	210.00
tblOffRoadEquipment	HorsePower	171.00	180.00
tblOffRoadEquipment	HorsePower	171.00	475.00
tblOffRoadEquipment	HorsePower	171.00	180.00
tblOffRoadEquipment	HorsePower	171.00	385.00
tblOffRoadEquipment	HorsePower	171.00	630.00
tblOffRoadEquipment	HorsePower	171.00	365.00
tblOffRoadEquipment	HorsePower	171.00	245.00
tblOffRoadEquipment	HorsePower	171.00	210.00
tblOffRoadEquipment	HorsePower	171.00	210.00
tblOffRoadEquipment	HorsePower	171.00	210.00
tblOffRoadEquipment	HorsePower	171.00	180.00
tblOffRoadEquipment	HorsePower	171.00	475.00

tblOffRoadEquipment	HorsePower	171.00	180.00
tblOffRoadEquipment	HorsePower	171.00	385.00
tblOffRoadEquipment	HorsePower	171.00	630.00
tblOffRoadEquipment	HorsePower	171.00	365.00
tblOffRoadEquipment	HorsePower	171.00	245.00
tblOffRoadEquipment	HorsePower	171.00	210.00
tblOffRoadEquipment	HorsePower	171.00	210.00
tblOffRoadEquipment	HorsePower	171.00	210.00
tblOffRoadEquipment	HorsePower	171.00	180.00
tblOffRoadEquipment	HorsePower	171.00	475.00
tblOffRoadEquipment	HorsePower	171.00	180.00
tblOffRoadEquipment	HorsePower	171.00	385.00
tblOffRoadEquipment	HorsePower	171.00	630.00
tblOffRoadEquipment	HorsePower	171.00	365.00
tblOffRoadEquipment	HorsePower	171.00	245.00
tblOffRoadEquipment	HorsePower	171.00	210.00
tblOffRoadEquipment	HorsePower	171.00	210.00
tblOffRoadEquipment	HorsePower	171.00	210.00
tblOffRoadEquipment	HorsePower	171.00	180.00
tblOffRoadEquipment	HorsePower	171.00	475.00
tblOffRoadEquipment	HorsePower	171.00	180.00
tblOffRoadEquipment	HorsePower	171.00	385.00
tblOffRoadEquipment	HorsePower	171.00	630.00
tblOffRoadEquipment	HorsePower	171.00	365.00
tblOffRoadEquipment	HorsePower	171.00	245.00
tblOffRoadEquipment	HorsePower	171.00	210.00
tblOffRoadEquipment	HorsePower	171.00	210.00
tblOffRoadEquipment	HorsePower	171.00	210.00

tblOffRoadEquipment	HorsePower	171.00	180.00
tblOffRoadEquipment	HorsePower	171.00	475.00
tblOffRoadEquipment	HorsePower	171.00	180.00
tblOffRoadEquipment	HorsePower	171.00	385.00
tblOffRoadEquipment	HorsePower	171.00	630.00
tblOffRoadEquipment	HorsePower	171.00	365.00
tblOffRoadEquipment	HorsePower	171.00	245.00
tblOffRoadEquipment	HorsePower	171.00	210.00
tblOffRoadEquipment	HorsePower	171.00	210.00
tblOffRoadEquipment	HorsePower	171.00	210.00
tblOffRoadEquipment	HorsePower	171.00	180.00
tblOffRoadEquipment	HorsePower	171.00	475.00
tblOffRoadEquipment	HorsePower	171.00	180.00
tblOffRoadEquipment	HorsePower	171.00	385.00
tblOffRoadEquipment	HorsePower	171.00	630.00
tblOffRoadEquipment	HorsePower	171.00	365.00
tblOffRoadEquipment	HorsePower	171.00	245.00
tblOffRoadEquipment	HorsePower	171.00	210.00
tblOffRoadEquipment	HorsePower	171.00	210.00
tblOffRoadEquipment	HorsePower	171.00	210.00
tblOffRoadEquipment	HorsePower	171.00	180.00
tblOffRoadEquipment	HorsePower	171.00	475.00
tblOffRoadEquipment	HorsePower	171.00	180.00
tblOffRoadEquipment	HorsePower	171.00	385.00
tblOffRoadEquipment	HorsePower	171.00	630.00
tblOffRoadEquipment	HorsePower	171.00	365.00
tblOffRoadEquipment	HorsePower	171.00	245.00
tblOffRoadEquipment	HorsePower	171.00	210.00

tblOffRoadEquipment	HorsePower	171.00	210.00
tblOffRoadEquipment	HorsePower	171.00	210.00
tblOffRoadEquipment	HorsePower	171.00	180.00
tblOffRoadEquipment	HorsePower	171.00	475.00
tblOffRoadEquipment	HorsePower	171.00	180.00
tblOffRoadEquipment	HorsePower	171.00	385.00
tblOffRoadEquipment	HorsePower	171.00	630.00
tblOffRoadEquipment	HorsePower	171.00	365.00
tblOffRoadEquipment	HorsePower	171.00	245.00
tblOffRoadEquipment	HorsePower	171.00	210.00
tblOffRoadEquipment	HorsePower	171.00	210.00
tblOffRoadEquipment	HorsePower	171.00	210.00
tblOffRoadEquipment	HorsePower	171.00	180.00
tblOffRoadEquipment	HorsePower	171.00	475.00
tblOffRoadEquipment	HorsePower	171.00	180.00
tblOffRoadEquipment	HorsePower	171.00	385.00
tblOffRoadEquipment	HorsePower	171.00	630.00
tblOffRoadEquipment	HorsePower	171.00	365.00
tblOffRoadEquipment	HorsePower	171.00	245.00
tblOffRoadEquipment	HorsePower	171.00	210.00
tblOffRoadEquipment	HorsePower	171.00	210.00
tblOffRoadEquipment	HorsePower	171.00	210.00
tblOffRoadEquipment	HorsePower	171.00	180.00
tblOffRoadEquipment	HorsePower	171.00	475.00
tblOffRoadEquipment	HorsePower	171.00	180.00
tblOffRoadEquipment	HorsePower	171.00	385.00
tblOffRoadEquipment	HorsePower	171.00	630.00
tblOffRoadEquipment	HorsePower	171.00	365.00

tblOffRoadEquipment	HorsePower	171.00	245.00
tblOffRoadEquipment	HorsePower	171.00	210.00
tblOffRoadEquipment	HorsePower	171.00	210.00
tblOffRoadEquipment	HorsePower	171.00	210.00
tblOffRoadEquipment	HorsePower	171.00	180.00
tblOffRoadEquipment	HorsePower	171.00	475.00
tblOffRoadEquipment	HorsePower	171.00	180.00
tblOffRoadEquipment	HorsePower	171.00	385.00
tblOffRoadEquipment	HorsePower	171.00	630.00
tblOffRoadEquipment	HorsePower	171.00	365.00
tblOffRoadEquipment	HorsePower	171.00	245.00
tblOffRoadEquipment	HorsePower	171.00	210.00
tblOffRoadEquipment	HorsePower	171.00	210.00
tblOffRoadEquipment	HorsePower	171.00	210.00
tblOffRoadEquipment	HorsePower	171.00	180.00
tblOffRoadEquipment	HorsePower	171.00	475.00
tblOffRoadEquipment	HorsePower	171.00	180.00
tblOffRoadEquipment	HorsePower	171.00	385.00
tblOffRoadEquipment	HorsePower	171.00	630.00
tblOffRoadEquipment	HorsePower	171.00	365.00
tblOffRoadEquipment	HorsePower	171.00	245.00
tblOffRoadEquipment	HorsePower	171.00	210.00
tblOffRoadEquipment	HorsePower	171.00	210.00
tblOffRoadEquipment	HorsePower	171.00	210.00
tblOffRoadEquipment	HorsePower	171.00	180.00
tblOffRoadEquipment	HorsePower	171.00	475.00
tblOffRoadEquipment	HorsePower	171.00	180.00
tblOffRoadEquipment	HorsePower	171.00	385.00

tblOffRoadEquipment	HorsePower	171.00	630.00
tblOffRoadEquipment	HorsePower	171.00	365.00
tblOffRoadEquipment	HorsePower	171.00	245.00
tblOffRoadEquipment	HorsePower	171.00	210.00
tblOffRoadEquipment	HorsePower	171.00	210.00
tblOffRoadEquipment	HorsePower	171.00	210.00
tblOffRoadEquipment	HorsePower	171.00	180.00
tblOffRoadEquipment	HorsePower	171.00	475.00
tblOffRoadEquipment	HorsePower	171.00	180.00
tblOffRoadEquipment	HorsePower	171.00	385.00
tblOffRoadEquipment	HorsePower	171.00	630.00
tblOffRoadEquipment	HorsePower	171.00	365.00
tblOffRoadEquipment	HorsePower	171.00	245.00
tblOffRoadEquipment	HorsePower	171.00	210.00
tblOffRoadEquipment	HorsePower	171.00	210.00
tblOffRoadEquipment	HorsePower	171.00	210.00
tblOffRoadEquipment	HorsePower	171.00	180.00
tblOffRoadEquipment	HorsePower	171.00	475.00
tblOffRoadEquipment	HorsePower	171.00	180.00
tblOffRoadEquipment	HorsePower	171.00	385.00
tblOffRoadEquipment	HorsePower	171.00	630.00
tblOffRoadEquipment	HorsePower	171.00	365.00
tblOffRoadEquipment	HorsePower	171.00	245.00
tblOffRoadEquipment	HorsePower	171.00	210.00
tblOffRoadEquipment	HorsePower	171.00	210.00
tblOffRoadEquipment	HorsePower	171.00	210.00
tblOffRoadEquipment	HorsePower	171.00	180.00
tblOffRoadEquipment	HorsePower	171.00	475.00

tblOffRoadEquipment	HorsePower	171.00	180.00
tblOffRoadEquipment	HorsePower	171.00	385.00
tblOffRoadEquipment	HorsePower	171.00	630.00
tblOffRoadEquipment	HorsePower	171.00	365.00
tblOffRoadEquipment	HorsePower	171.00	245.00
tblOffRoadEquipment	HorsePower	171.00	210.00
tblOffRoadEquipment	HorsePower	171.00	210.00
tblOffRoadEquipment	HorsePower	171.00	210.00
tblOffRoadEquipment	HorsePower	171.00	180.00
tblOffRoadEquipment	HorsePower	171.00	475.00
tblOffRoadEquipment	HorsePower	171.00	180.00
tblOffRoadEquipment	HorsePower	171.00	385.00
tblOffRoadEquipment	HorsePower	171.00	630.00
tblOffRoadEquipment	HorsePower	171.00	365.00
tblOffRoadEquipment	HorsePower	171.00	245.00
tblOffRoadEquipment	HorsePower	171.00	210.00
tblOffRoadEquipment	HorsePower	171.00	210.00
tblOffRoadEquipment	HorsePower	171.00	210.00
tblOffRoadEquipment	HorsePower	171.00	180.00
tblOffRoadEquipment	HorsePower	171.00	475.00
tblOffRoadEquipment	HorsePower	171.00	180.00
tblOffRoadEquipment	HorsePower	171.00	385.00
tblOffRoadEquipment	HorsePower	171.00	630.00
tblOffRoadEquipment	HorsePower	171.00	365.00
tblOffRoadEquipment	HorsePower	171.00	245.00
tblOffRoadEquipment	HorsePower	171.00	210.00
tblOffRoadEquipment	HorsePower	171.00	210.00
tblOffRoadEquipment	HorsePower	171.00	210.00

tblOffRoadEquipment	HorsePower	171.00	180.00
tblOffRoadEquipment	HorsePower	171.00	475.00
tblOffRoadEquipment	HorsePower	171.00	180.00
tblOffRoadEquipment	HorsePower	171.00	385.00
tblOffRoadEquipment	HorsePower	171.00	630.00
tblOffRoadEquipment	HorsePower	171.00	365.00
tblOffRoadEquipment	HorsePower	171.00	245.00
tblOffRoadEquipment	HorsePower	171.00	210.00
tblOffRoadEquipment	HorsePower	171.00	210.00
tblOffRoadEquipment	HorsePower	171.00	210.00
tblOffRoadEquipment	HorsePower	171.00	180.00
tblOffRoadEquipment	HorsePower	171.00	475.00
tblOffRoadEquipment	HorsePower	171.00	180.00
tblOffRoadEquipment	HorsePower	171.00	385.00
tblOffRoadEquipment	HorsePower	171.00	630.00
tblOffRoadEquipment	HorsePower	171.00	365.00
tblOffRoadEquipment	HorsePower	171.00	245.00
tblOffRoadEquipment	HorsePower	171.00	210.00
tblOffRoadEquipment	HorsePower	171.00	210.00
tblOffRoadEquipment	HorsePower	171.00	210.00
tblOffRoadEquipment	HorsePower	171.00	180.00
tblOffRoadEquipment	HorsePower	171.00	475.00
tblOffRoadEquipment	HorsePower	171.00	180.00
tblOffRoadEquipment	HorsePower	171.00	385.00
tblOffRoadEquipment	HorsePower	171.00	630.00
tblOffRoadEquipment	HorsePower	171.00	365.00
tblOffRoadEquipment	HorsePower	171.00	245.00
tblOffRoadEquipment	HorsePower	171.00	210.00

tblOffRoadEquipment	HorsePower	171.00	210.00
tblOffRoadEquipment	HorsePower	171.00	210.00
tblOffRoadEquipment	HorsePower	171.00	180.00
tblOffRoadEquipment	HorsePower	171.00	475.00
tblOffRoadEquipment	HorsePower	171.00	180.00
tblOffRoadEquipment	HorsePower	171.00	385.00
tblOffRoadEquipment	HorsePower	171.00	630.00
tblOffRoadEquipment	HorsePower	171.00	365.00
tblOffRoadEquipment	HorsePower	171.00	245.00
tblOffRoadEquipment	HorsePower	171.00	210.00
tblOffRoadEquipment	HorsePower	171.00	210.00
tblOffRoadEquipment	HorsePower	171.00	210.00
tblOffRoadEquipment	HorsePower	171.00	180.00
tblOffRoadEquipment	HorsePower	171.00	475.00
tblOffRoadEquipment	HorsePower	171.00	180.00
tblOffRoadEquipment	HorsePower	171.00	385.00
tblOffRoadEquipment	HorsePower	171.00	630.00
tblOffRoadEquipment	HorsePower	171.00	365.00
tblOffRoadEquipment	HorsePower	171.00	245.00
tblOffRoadEquipment	HorsePower	171.00	210.00
tblOffRoadEquipment	HorsePower	171.00	210.00
tblOffRoadEquipment	HorsePower	171.00	210.00
tblOffRoadEquipment	HorsePower	171.00	180.00
tblOffRoadEquipment	HorsePower	171.00	475.00
tblOffRoadEquipment	HorsePower	171.00	180.00
tblOffRoadEquipment	HorsePower	171.00	385.00
tblOffRoadEquipment	HorsePower	171.00	630.00
tblOffRoadEquipment	HorsePower	171.00	365.00

tblOffRoadEquipment	HorsePower	171.00	245.00
tblOffRoadEquipment	HorsePower	171.00	210.00
tblOffRoadEquipment	HorsePower	171.00	210.00
tblOffRoadEquipment	HorsePower	171.00	210.00
tblOffRoadEquipment	HorsePower	171.00	180.00
tblOffRoadEquipment	HorsePower	171.00	475.00
tblOffRoadEquipment	HorsePower	171.00	180.00
tblOffRoadEquipment	HorsePower	171.00	385.00
tblOffRoadEquipment	HorsePower	171.00	630.00
tblOffRoadEquipment	HorsePower	171.00	365.00
tblOffRoadEquipment	HorsePower	171.00	245.00
tblOffRoadEquipment	HorsePower	171.00	210.00
tblOffRoadEquipment	HorsePower	171.00	210.00
tblOffRoadEquipment	HorsePower	171.00	210.00
tblOffRoadEquipment	HorsePower	171.00	180.00
tblOffRoadEquipment	HorsePower	171.00	475.00
tblOffRoadEquipment	HorsePower	171.00	180.00
tblOffRoadEquipment	HorsePower	171.00	385.00
tblOffRoadEquipment	HorsePower	171.00	630.00
tblOffRoadEquipment	HorsePower	171.00	365.00
tblOffRoadEquipment	HorsePower	171.00	245.00
tblOffRoadEquipment	HorsePower	171.00	210.00
tblOffRoadEquipment	HorsePower	171.00	210.00
tblOffRoadEquipment	HorsePower	171.00	210.00
tblOffRoadEquipment	HorsePower	171.00	180.00
tblOffRoadEquipment	HorsePower	171.00	475.00
tblOffRoadEquipment	HorsePower	171.00	180.00
tblOffRoadEquipment	HorsePower	171.00	385.00

tblOffRoadEquipment	HorsePower	171.00	630.00
tblOffRoadEquipment	HorsePower	171.00	365.00
tblOffRoadEquipment	HorsePower	171.00	245.00
tblOffRoadEquipment	HorsePower	171.00	210.00
tblOffRoadEquipment	HorsePower	171.00	210.00
tblOffRoadEquipment	HorsePower	171.00	210.00
tblOffRoadEquipment	HorsePower	171.00	180.00
tblOffRoadEquipment	HorsePower	171.00	475.00
tblOffRoadEquipment	HorsePower	171.00	180.00
tblOffRoadEquipment	HorsePower	171.00	385.00
tblOffRoadEquipment	HorsePower	171.00	630.00
tblOffRoadEquipment	HorsePower	171.00	365.00
tblOffRoadEquipment	HorsePower	171.00	245.00
tblOffRoadEquipment	HorsePower	171.00	210.00
tblOffRoadEquipment	HorsePower	171.00	210.00
tblOffRoadEquipment	HorsePower	171.00	210.00
tblOffRoadEquipment	HorsePower	171.00	180.00
tblOffRoadEquipment	HorsePower	171.00	475.00
tblOffRoadEquipment	HorsePower	171.00	180.00
tblOffRoadEquipment	HorsePower	171.00	385.00
tblOffRoadEquipment	HorsePower	171.00	630.00
tblOffRoadEquipment	HorsePower	171.00	365.00
tblOffRoadEquipment	HorsePower	171.00	245.00
tblOffRoadEquipment	HorsePower	171.00	210.00
tblOffRoadEquipment	HorsePower	171.00	210.00
tblOffRoadEquipment	HorsePower	171.00	210.00
tblOffRoadEquipment	HorsePower	171.00	180.00
tblOffRoadEquipment	HorsePower	171.00	475.00

tblOffRoadEquipment	HorsePower	171.00	180.00
tblOffRoadEquipment	HorsePower	171.00	385.00
tblOffRoadEquipment	HorsePower	171.00	630.00
tblOffRoadEquipment	HorsePower	171.00	365.00
tblOffRoadEquipment	HorsePower	171.00	245.00
tblOffRoadEquipment	HorsePower	171.00	210.00
tblOffRoadEquipment	OffRoadEquipmentUnitAmount	1.00	2.00
tblOffRoadEquipment	OffRoadEquipmentUnitAmount	1.00	2.00
tblOffRoadEquipment	OffRoadEquipmentUnitAmount	1.00	2.00
tblOffRoadEquipment	OffRoadEquipmentUnitAmount	1.00	2.00
tblOffRoadEquipment	OffRoadEquipmentUnitAmount	1.00	2.00
tblOffRoadEquipment	OffRoadEquipmentUnitAmount	1.00	2.00
tblOffRoadEquipment	OffRoadEquipmentUnitAmount	1.00	2.00
tblOffRoadEquipment	OffRoadEquipmentUnitAmount	1.00	2.00
tblOffRoadEquipment	OffRoadEquipmentUnitAmount	1.00	2.00
tblOffRoadEquipment	OffRoadEquipmentUnitAmount	1.00	2.00
tblOffRoadEquipment	OffRoadEquipmentUnitAmount	1.00	2.00
tblOffRoadEquipment	OffRoadEquipmentUnitAmount	1.00	2.00
tblOffRoadEquipment	OffRoadEquipmentUnitAmount	1.00	2.00
tblOffRoadEquipment	OffRoadEquipmentUnitAmount	1.00	2.00
tblOffRoadEquipment	OffRoadEquipmentUnitAmount	1.00	2.00
tblOffRoadEquipment	OffRoadEquipmentUnitAmount	1.00	2.00
tblOffRoadEquipment	OffRoadEquipmentUnitAmount	3.00	1.00
tblOffRoadEquipment	OffRoadEquipmentUnitAmount	3.00	1.00
tblOffRoadEquipment	OffRoadEquipmentUnitAmount	3.00	1.00
tblOffRoadEquipment	OffRoadEquipmentUnitAmount	3.00	1.00

tblOffRoadEquipment	OffRoadEquipmentUnitAmount	3.00	1.00
tblOffRoadEquipment	OffRoadEquipmentUnitAmount	3.00	1.00
tblOffRoadEquipment	OffRoadEquipmentUnitAmount	3.00	1.00
tblOffRoadEquipment	OffRoadEquipmentUnitAmount	3.00	1.00
tblOffRoadEquipment	OffRoadEquipmentUnitAmount	3.00	1.00
tblOffRoadEquipment	OffRoadEquipmentUnitAmount	3.00	1.00
tblOffRoadEquipment	OffRoadEquipmentUnitAmount	3.00	1.00
tblOffRoadEquipment	OffRoadEquipmentUnitAmount	3.00	1.00
tblOffRoadEquipment	OffRoadEquipmentUnitAmount	3.00	1.00
tblOffRoadEquipment	OffRoadEquipmentUnitAmount	3.00	1.00
tblOffRoadEquipment	OffRoadEquipmentUnitAmount	3.00	1.00
tblOffRoadEquipment	OffRoadEquipmentUnitAmount	3.00	1.00
tblOffRoadEquipment	OffRoadEquipmentUnitAmount	3.00	1.00
tblOffRoadEquipment	OffRoadEquipmentUnitAmount	3.00	1.00
tblOffRoadEquipment	OffRoadEquipmentUnitAmount	3.00	1.00
tblOffRoadEquipment	OffRoadEquipmentUnitAmount	3.00	1.00
tblOffRoadEquipment	OffRoadEquipmentUnitAmount	3.00	1.00
tblOffRoadEquipment	OffRoadEquipmentUnitAmount	3.00	1.00
tblOffRoadEquipment	OffRoadEquipmentUnitAmount	3.00	1.00
tblOffRoadEquipment	OffRoadEquipmentUnitAmount	3.00	1.00
tblOffRoadEquipment	OffRoadEquipmentUnitAmount	3.00	1.00
tblOffRoadEquipment	OffRoadEquipmentUnitAmount	3.00	1.00
tblOffRoadEquipment	OffRoadEquipmentUnitAmount	3.00	1.00
tblOffRoadEquipment	OffRoadEquipmentUnitAmount	3.00	1.00
tblOffRoadEquipment	OffRoadEquipmentUnitAmount	3.00	1.00
tblOffRoadEquipment	UsageHours	7.00	3.10

tblOffRoadEquipment	UsageHours	7.00	0.70
tblOffRoadEquipment	UsageHours	7.00	2.30
tblOffRoadEquipment	UsageHours	7.00	0.80
tblOffRoadEquipment	UsageHours	7.00	3.00
tblOffRoadEquipment	UsageHours	7.00	0.90
tblOffRoadEquipment	UsageHours	7.00	2.90
tblOffRoadEquipment	UsageHours	7.00	0.80
tblOffRoadEquipment	UsageHours	7.00	2.70
tblOffRoadEquipment	UsageHours	7.00	0.80
tblOffRoadEquipment	UsageHours	7.00	2.70
tblOffRoadEquipment	UsageHours	7.00	0.80
tblOffRoadEquipment	UsageHours	7.00	2.90
tblOffRoadEquipment	UsageHours	7.00	1.00
tblOffRoadEquipment	UsageHours	7.00	3.10
tblOffRoadEquipment	UsageHours	7.00	0.90
tblOffRoadEquipment	UsageHours	7.00	2.80
tblOffRoadEquipment	UsageHours	7.00	0.80
tblOffRoadEquipment	UsageHours	7.00	3.60
tblOffRoadEquipment	UsageHours	7.00	1.20
tblOffRoadEquipment	UsageHours	7.00	2.70
tblOffRoadEquipment	UsageHours	7.00	0.90
tblOffRoadEquipment	UsageHours	7.00	2.30
tblOffRoadEquipment	UsageHours	7.00	0.50
tblOffRoadEquipment	UsageHours	7.00	2.70
tblOffRoadEquipment	UsageHours	7.00	0.90
tblOffRoadEquipment	UsageHours	7.00	2.70
tblOffRoadEquipment	UsageHours	7.00	0.90
tblOffRoadEquipment	UsageHours	7.00	2.70

tblOffRoadEquipment	UsageHours	7.00	0.90
tblOffRoadEquipment	UsageHours	7.00	2.70
tblOffRoadEquipment	UsageHours	7.00	0.90
tblOffRoadEquipment	UsageHours	7.00	2.70
tblOffRoadEquipment	UsageHours	7.00	0.90
tblOffRoadEquipment	UsageHours	7.00	2.70
tblOffRoadEquipment	UsageHours	7.00	0.90
tblOffRoadEquipment	UsageHours	7.00	2.70
tblOffRoadEquipment	UsageHours	7.00	0.90
tblOffRoadEquipment	UsageHours	7.00	2.70
tblOffRoadEquipment	UsageHours	7.00	0.90
tblOffRoadEquipment	UsageHours	7.00	2.70
tblOffRoadEquipment	UsageHours	7.00	0.90
tblOffRoadEquipment	UsageHours	7.00	2.70
tblOffRoadEquipment	UsageHours	7.00	0.90
tblOffRoadEquipment	UsageHours	7.00	1.20
tblOffRoadEquipment	UsageHours	7.00	0.40
tblOffRoadEquipment	UsageHours	7.00	2.70
tblOffRoadEquipment	UsageHours	7.00	0.90
tblOffRoadEquipment	UsageHours	7.00	2.70
tblOffRoadEquipment	UsageHours	7.00	0.90
tblOffRoadEquipment	UsageHours	7.00	2.30
tblOffRoadEquipment	UsageHours	7.00	0.80
tblOffRoadEquipment	UsageHours	7.00	2.30
tblOffRoadEquipment	UsageHours	7.00	0.80
tblOffRoadEquipment	UsageHours	7.00	4.10
tblOffRoadEquipment	UsageHours	7.00	1.10
tblOffRoadEquipment	UsageHours	7.00	2.70

tblOffRoadEquipment	UsageHours	7.00	0.70
tblOffRoadEquipment	UsageHours	7.00	2.80
tblOffRoadEquipment	UsageHours	7.00	0.80
tblOffRoadEquipment	UsageHours	7.00	2.90
tblOffRoadEquipment	UsageHours	7.00	1.00
tblOffRoadEquipment	UsageHours	8.00	16.10
tblOffRoadEquipment	UsageHours	8.00	23.90
tblOffRoadEquipment	UsageHours	8.00	15.70
tblOffRoadEquipment	UsageHours	8.00	11.60
tblOffRoadEquipment	UsageHours	8.00	13.00
tblOffRoadEquipment	UsageHours	8.00	19.40
tblOffRoadEquipment	UsageHours	8.00	12.70
tblOffRoadEquipment	UsageHours	8.00	18.90
tblOffRoadEquipment	UsageHours	8.00	22.30
tblOffRoadEquipment	UsageHours	8.00	16.60
tblOffRoadEquipment	UsageHours	8.00	22.60
tblOffRoadEquipment	UsageHours	8.00	16.80
tblOffRoadEquipment	UsageHours	8.00	19.60
tblOffRoadEquipment	UsageHours	8.00	14.50
tblOffRoadEquipment	UsageHours	8.00	12.10
tblOffRoadEquipment	UsageHours	8.00	18.00
tblOffRoadEquipment	UsageHours	8.00	12.90
tblOffRoadEquipment	UsageHours	8.00	19.10
tblOffRoadEquipment	UsageHours	8.00	12.10
tblOffRoadEquipment	UsageHours	8.00	18.00
tblOffRoadEquipment	UsageHours	8.00	18.10
tblOffRoadEquipment	UsageHours	8.00	13.40
tblOffRoadEquipment	UsageHours	8.00	12.40

tblOffRoadEquipment	UsageHours	8.00	18.40
tblOffRoadEquipment	UsageHours	8.00	18.30
tblOffRoadEquipment	UsageHours	8.00	13.60
tblOffRoadEquipment	UsageHours	8.00	18.30
tblOffRoadEquipment	UsageHours	8.00	13.60
tblOffRoadEquipment	UsageHours	8.00	18.10
tblOffRoadEquipment	UsageHours	8.00	13.40
tblOffRoadEquipment	UsageHours	8.00	18.10
tblOffRoadEquipment	UsageHours	8.00	13.40
tblOffRoadEquipment	UsageHours	8.00	18.10
tblOffRoadEquipment	UsageHours	8.00	13.40
tblOffRoadEquipment	UsageHours	8.00	18.10
tblOffRoadEquipment	UsageHours	8.00	13.40
tblOffRoadEquipment	UsageHours	8.00	18.10
tblOffRoadEquipment	UsageHours	8.00	13.40
tblOffRoadEquipment	UsageHours	8.00	18.10
tblOffRoadEquipment	UsageHours	8.00	13.40
tblOffRoadEquipment	UsageHours	8.00	18.10
tblOffRoadEquipment	UsageHours	8.00	13.40
tblOffRoadEquipment	UsageHours	8.00	7.80
tblOffRoadEquipment	UsageHours	8.00	5.80
tblOffRoadEquipment	UsageHours	8.00	18.10
tblOffRoadEquipment	UsageHours	8.00	13.40
tblOffRoadEquipment	UsageHours	8.00	18.10
tblOffRoadEquipment	UsageHours	8.00	13.40
tblOffRoadEquipment	UsageHours	8.00	15.70

tblOffRoadEquipment	UsageHours	8.00	11.60
tblOffRoadEquipment	UsageHours	8.00	15.70
tblOffRoadEquipment	UsageHours	8.00	11.60
tblOffRoadEquipment	UsageHours	8.00	19.60
tblOffRoadEquipment	UsageHours	8.00	14.60
tblOffRoadEquipment	UsageHours	8.00	12.60
tblOffRoadEquipment	UsageHours	8.00	18.70
tblOffRoadEquipment	UsageHours	8.00	12.80
tblOffRoadEquipment	UsageHours	8.00	19.00
tblOffRoadEquipment	UsageHours	8.00	19.60
tblOffRoadEquipment	UsageHours	8.00	14.50
tblOffRoadEquipment	UsageHours	7.00	1.70
tblOffRoadEquipment	UsageHours	7.00	0.80
tblOffRoadEquipment	UsageHours	7.00	1.30
tblOffRoadEquipment	UsageHours	7.00	1.40
tblOffRoadEquipment	UsageHours	7.00	1.10
tblOffRoadEquipment	UsageHours	7.00	1.20
tblOffRoadEquipment	UsageHours	7.00	1.00
tblOffRoadEquipment	UsageHours	7.00	1.20
tblOffRoadEquipment	UsageHours	7.00	1.30
tblOffRoadEquipment	UsageHours	7.00	1.20
tblOffRoadEquipment	UsageHours	7.00	0.90
tblOffRoadEquipment	UsageHours	7.00	1.30
tblOffRoadEquipment	UsageHours	7.00	0.90
tblOffRoadEquipment	UsageHours	7.00	0.90
tblOffRoadEquipment	UsageHours	7.00	0.90
tblOffRoadEquipment	UsageHours	7.00	0.90
tblOffRoadEquipment	UsageHours	7.00	0.90

tblOffRoadEquipment	UsageHours	7.00	0.90
tblOffRoadEquipment	UsageHours	7.00	0.90
tblOffRoadEquipment	UsageHours	7.00	0.90
tblOffRoadEquipment	UsageHours	7.00	0.90
tblOffRoadEquipment	UsageHours	7.00	0.90
tblOffRoadEquipment	UsageHours	7.00	0.40
tblOffRoadEquipment	UsageHours	7.00	0.90
tblOffRoadEquipment	UsageHours	7.00	0.90
tblOffRoadEquipment	UsageHours	7.00	0.80
tblOffRoadEquipment	UsageHours	7.00	0.80
tblOffRoadEquipment	UsageHours	7.00	2.00
tblOffRoadEquipment	UsageHours	7.00	1.30
tblOffRoadEquipment	UsageHours	7.00	1.30
tblOffRoadEquipment	UsageHours	7.00	1.00
tblOffRoadEquipment	UsageHours	8.00	5.10
tblOffRoadEquipment	UsageHours	8.00	2.30
tblOffRoadEquipment	UsageHours	8.00	4.00
tblOffRoadEquipment	UsageHours	8.00	3.90
tblOffRoadEquipment	UsageHours	8.00	3.40
tblOffRoadEquipment	UsageHours	8.00	3.50
tblOffRoadEquipment	UsageHours	8.00	2.90
tblOffRoadEquipment	UsageHours	8.00	3.70
tblOffRoadEquipment	UsageHours	8.00	4.00
tblOffRoadEquipment	UsageHours	8.00	3.60
tblOffRoadEquipment	UsageHours	8.00	2.70
tblOffRoadEquipment	UsageHours	8.00	3.90
tblOffRoadEquipment	UsageHours	8.00	2.70
tblOffRoadEquipment	UsageHours	8.00	2.70

tblOffRoadEquipment	UsageHours	8.00	2.70
tblOffRoadEquipment	UsageHours	8.00	2.70
tblOffRoadEquipment	UsageHours	8.00	2.70
tblOffRoadEquipment	UsageHours	8.00	2.70
tblOffRoadEquipment	UsageHours	8.00	2.70
tblOffRoadEquipment	UsageHours	8.00	2.70
tblOffRoadEquipment	UsageHours	8.00	2.70
tblOffRoadEquipment	UsageHours	8.00	2.70
tblOffRoadEquipment	UsageHours	8.00	1.20
tblOffRoadEquipment	UsageHours	8.00	2.70
tblOffRoadEquipment	UsageHours	8.00	2.70
tblOffRoadEquipment	UsageHours	8.00	2.30
tblOffRoadEquipment	UsageHours	8.00	2.30
tblOffRoadEquipment	UsageHours	8.00	6.10
tblOffRoadEquipment	UsageHours	8.00	3.90
tblOffRoadEquipment	UsageHours	8.00	4.00
tblOffRoadEquipment	UsageHours	8.00	2.90
tblProjectCharacteristics	OperationalYear	2014	2035
tblProjectCharacteristics	UrbanizationLevel	Urban	Rural

2.0 Emissions Summary

2.1 Overall Construction

Unmitigated Construction

	ROG	NOx	CO	SO2	Fugitive PM10	Exhaust PM10	PM10 Total	Fugitive PM2.5	Exhaust PM2.5	PM2.5 Total	Bio- CO2	NBio- CO2	Total CO2	CH4	N2O	CO2e
Year	tons/yr										MT/yr					
2019	2.0670	21.7162	11.0478	0.0486	0.0000	0.6790	0.6790	0.0000	0.6666	0.6666	0.0000	4,913.4085	4,913.4085	0.3353	0.0000	4,920.4498
2020	1.5116	14.9482	8.4265	0.0376	0.0000	0.4770	0.4770	0.0000	0.4680	0.4680	0.0000	3,785.1274	3,785.1274	0.2529	0.0000	3,790.4391
2021	0.0377	0.3484	0.2227	9.9000e-004	0.0000	0.0113	0.0113	0.0000	0.0110	0.0110	0.0000	99.9643	99.9643	6.8600e-003	0.0000	100.1083
2022	0.0706	0.6072	0.4335	1.9900e-003	0.0000	0.0198	0.0198	0.0000	0.0194	0.0194	0.0000	200.3380	200.3380	0.0134	0.0000	200.6183
2023	0.0673	0.5434	0.4296	1.9900e-003	0.0000	0.0174	0.0174	0.0000	0.0170	0.0170	0.0000	200.3484	200.3484	0.0130	0.0000	200.6223
2024	1.9076	14.4198	12.7400	0.0597	0.0000	0.4539	0.4539	0.0000	0.4440	0.4440	0.0000	6,011.3004	6,011.3004	0.3688	0.0000	6,019.0455
2025	0.6850	4.8032	4.7672	0.0224	0.0000	0.1478	0.1478	0.0000	0.1444	0.1444	0.0000	2,260.7670	2,260.7670	0.1386	0.0000	2,263.6776
2026	0.4020	2.8204	2.7977	0.0132	0.0000	0.0869	0.0869	0.0000	0.0849	0.0849	0.0000	1,325.3967	1,325.3967	0.0818	0.0000	1,327.1151
2027	0.1531	1.0741	1.0630	4.9800e-003	0.0000	0.0334	0.0334	0.0000	0.0326	0.0326	0.0000	500.7147	500.7147	0.0319	0.0000	501.3839
2028	0.1224	0.8592	0.8504	3.9800e-003	0.0000	0.0267	0.0267	0.0000	0.0260	0.0260	0.0000	400.7099	400.7099	0.0255	0.0000	401.2446
2029	0.4061	2.8491	2.8249	0.0133	0.0000	0.0879	0.0879	0.0000	0.0858	0.0858	0.0000	1,337.4724	1,337.4724	0.0829	0.0000	1,339.2134
2030	0.5746	2.2067	4.5841	0.0228	0.0000	0.0686	0.0686	0.0000	0.0686	0.0686	0.0000	2,341.4054	2,341.4054	0.0439	0.0000	2,342.3276
2031	0.4344	1.6665	3.4620	0.0172	0.0000	0.0518	0.0518	0.0000	0.0518	0.0518	0.0000	1,768.7383	1,768.7383	0.0332	0.0000	1,769.4355
2032	0.3620	1.3896	2.8865	0.0143	0.0000	0.0432	0.0432	0.0000	0.0432	0.0432	0.0000	1,473.9477	1,473.9477	0.0277	0.0000	1,474.5287
2033	0.1266	0.4847	1.0071	5.0000e-003	0.0000	0.0151	0.0151	0.0000	0.0151	0.0151	0.0000	513.6884	513.6884	9.6800e-003	0.0000	513.8916
2034	0.3910	1.5003	3.1158	0.0155	0.0000	0.0466	0.0466	0.0000	0.0466	0.0466	0.0000	1,591.1696	1,591.1696	0.0299	0.0000	1,591.7971
2035	0.4639	1.3507	3.9831	0.0198	0.0000	0.0439	0.0439	0.0000	0.0439	0.0439	0.0000	2,036.0376	2,036.0376	0.0350	0.0000	2,036.7730
2036	0.5878	1.7083	5.0322	0.0250	0.0000	0.0554	0.0554	0.0000	0.0554	0.0554	0.0000	2,567.4623	2,567.4623	0.0444	0.0000	2,568.3947

	ROG	NOx	CO	SO2	Fugitive PM10	Exhaust PM10	PM10 Total	Fugitive PM2.5	Exhaust PM2.5	PM2.5 Total	Bio- CO2	NBio- CO2	Total CO2	CH4	N2O	CO2e
Year	tons/yr										MT/yr					
2037	0.1652	0.4801	1.4141	7.0200e-003	0.0000	0.0156	0.0156	0.0000	0.0156	0.0156	0.0000	721.3763	721.3763	0.0125	0.0000	721.6383
2038	0.1649	0.4792	1.4119	7.0100e-003	0.0000	0.0156	0.0156	0.0000	0.0156	0.0156	0.0000	720.5062	720.5062	0.0125	0.0000	720.7678
2039	0.1649	0.4792	1.4119	7.0100e-003	0.0000	0.0156	0.0156	0.0000	0.0156	0.0156	0.0000	720.5062	720.5062	0.0125	0.0000	720.7678
2040	0.1599	0.4129	1.4140	7.0200e-003	0.0000	0.0129	0.0129	0.0000	0.0129	0.0129	0.0000	721.3774	721.3774	0.0125	0.0000	721.6391
2041	0.1599	0.4129	1.4140	7.0200e-003	0.0000	0.0129	0.0129	0.0000	0.0129	0.0129	0.0000	721.3774	721.3774	0.0125	0.0000	721.6391
2042	0.1599	0.4129	1.4140	7.0200e-003	0.0000	0.0129	0.0129	0.0000	0.0129	0.0129	0.0000	721.3774	721.3774	0.0125	0.0000	721.6391
2043	0.2341	0.6068	2.0984	0.0105	0.0000	0.0192	0.0192	0.0000	0.0192	0.0192	0.0000	1,082.1772	1,082.1772	0.0182	0.0000	1,082.5589
2044	0.2341	0.6068	2.0984	0.0105	0.0000	0.0192	0.0192	0.0000	0.0192	0.0192	0.0000	1,082.1772	1,082.1772	0.0182	0.0000	1,082.5589
2045	0.2341	0.6068	2.0984	0.0105	0.0000	0.0192	0.0192	0.0000	0.0192	0.0192	0.0000	1,082.1772	1,082.1772	0.0182	0.0000	1,082.5589
2046	0.2341	0.6068	2.0984	0.0105	0.0000	0.0192	0.0192	0.0000	0.0192	0.0192	0.0000	1,082.1772	1,082.1772	0.0182	0.0000	1,082.5589
2047	0.2341	0.6068	2.0984	0.0105	0.0000	0.0192	0.0192	0.0000	0.0192	0.0192	0.0000	1,082.1772	1,082.1772	0.0182	0.0000	1,082.5589
2048	0.2341	0.6068	2.0984	0.0105	0.0000	0.0192	0.0192	0.0000	0.0192	0.0192	0.0000	1,082.1772	1,082.1772	0.0182	0.0000	1,082.5589
2049	0.2311	0.5991	2.0718	0.0104	0.0000	0.0190	0.0190	0.0000	0.0190	0.0190	0.0000	1,068.4787	1,068.4787	0.0180	0.0000	1,068.8556
Total	**12.9808**	**82.2130**	**92.8160**	**0.4438**	**0.0000**	**2.5854**	**2.5854**	**0.0000**	**2.5438**	**2.5438**	**0.0000**	**45,216.0593**	**45,216.0593**	**1.7765**	**0.0000**	**45,253.3662**

2.1 Overall Construction

Mitigated Construction

	ROG	NOx	CO	SO2	Fugitive PM10	Exhaust PM10	PM10 Total	Fugitive PM2.5	Exhaust PM2.5	PM2.5 Total	Bio- CO2	NBio- CO2	Total CO2	CH4	N2O	CO2e
Year	tons/yr										MT/yr					
2019	0.4691	1.1150	22.5188	0.0486	0.0000	0.0331	0.0331	0.0000	0.0331	0.0331	0.0000	4,913.4026	4,913.4026	0.3353	0.0000	4,920.4439
2020	0.3694	1.0173	17.3992	0.0376	0.0000	0.0294	0.0294	0.0000	0.0294	0.0294	0.0000	3,785.1229	3,785.1229	0.2529	0.0000	3,790.4346
2021	0.0101	0.0320	0.4605	9.9000e-004	0.0000	9.2000e-004	9.2000e-004	0.0000	9.2000e-004	9.2000e-004	0.0000	99.9641	99.9641	6.8600e-003	0.0000	100.1082
2022	0.0204	0.0700	0.9226	1.9900e-003	0.0000	2.0200e-003	2.0200e-003	0.0000	2.0200e-003	2.0200e-003	0.0000	200.3378	200.3378	0.0134	0.0000	200.6181
2023	0.0207	0.0753	0.9228	1.9900e-003	0.0000	2.2200e-003	2.2200e-003	0.0000	2.2200e-003	2.2200e-003	0.0000	200.3482	200.3482	0.0130	0.0000	200.6220
2024	0.6267	2.3882	27.6553	0.0597	0.0000	0.0712	0.0712	0.0000	0.0712	0.0712	0.0000	6,011.2933	6,011.2933	0.3688	0.0000	6,019.0383
2025	0.2384	0.9518	10.4023	0.0224	0.0000	0.0287	0.0287	0.0000	0.0287	0.0287	0.0000	2,260.7643	2,260.7643	0.1386	0.0000	2,263.6749
2026	0.1398	0.5588	6.0997	0.0132	0.0000	0.0168	0.0168	0.0000	0.0168	0.0168	0.0000	1,325.3951	1,325.3951	0.0818	0.0000	1,327.1136
2027	0.0530	0.2125	2.3067	4.9800e-003	0.0000	6.3800e-003	6.3800e-003	0.0000	6.3800e-003	6.3800e-003	0.0000	500.7141	500.7141	0.0319	0.0000	501.3833
2028	0.0424	0.1700	1.8459	3.9800e-003	0.0000	5.1100e-003	5.1100e-003	0.0000	5.1100e-003	5.1100e-003	0.0000	400.7094	400.7094	0.0255	0.0000	401.2441
2029	0.1412	0.5642	6.1558	0.0133	0.0000	0.0170	0.0170	0.0000	0.0170	0.0170	0.0000	1,337.4708	1,337.4708	0.0829	0.0000	1,339.2118
2030	0.2511	1.1488	10.5181	0.0228	0.0000	0.0336	0.0336	0.0000	0.0336	0.0336	0.0000	2,341.4026	2,341.4026	0.0439	0.0000	2,342.3248
2031	0.1897	0.8684	7.9439	0.0172	0.0000	0.0254	0.0254	0.0000	0.0254	0.0254	0.0000	1,768.7362	1,768.7362	0.0332	0.0000	1,769.4334
2032	0.1581	0.7239	6.6208	0.0143	0.0000	0.0212	0.0212	0.0000	0.0212	0.0212	0.0000	1,473.9459	1,473.9459	0.0277	0.0000	1,474.5270
2033	0.0551	0.2529	2.3070	5.0000e-003	0.0000	7.3900e-003	7.3900e-003	0.0000	7.3900e-003	7.3900e-003	0.0000	513.6878	513.6878	9.6800e-003	0.0000	513.8910
2034	0.1707	0.7819	7.1470	0.0155	0.0000	0.0229	0.0229	0.0000	0.0229	0.0229	0.0000	1,591.1677	1,591.1677	0.0299	0.0000	1,591.7952
2035	0.2213	1.0502	9.1454	0.0198	0.0000	0.0306	0.0306	0.0000	0.0306	0.0306	0.0000	2,036.0352	2,036.0352	0.0350	0.0000	2,036.7705
2036	0.2794	1.3284	11.5300	0.0250	0.0000	0.0386	0.0386	0.0000	0.0386	0.0386	0.0000	2,567.4592	2,567.4592	0.0444	0.0000	2,568.3917

	ROG	NOx	CO	SO2	Fugitive PM10	Exhaust PM10	PM10 Total	Fugitive PM2.5	Exhaust PM2.5	PM2.5 Total	Bio- CO2	NBio- CO2	Total CO2	CH4	N2O	CO2e
Year	tons/yr										MT/yr					
2037	0.0785	0.3733	3.2396	7.0200e-003	0.0000	0.0108	0.0108	0.0000	0.0108	0.0108	0.0000	721.3754	721.3754	0.0125	0.0000	721.6375
2038	0.0784	0.3727	3.2356	7.0100e-003	0.0000	0.0108	0.0108	0.0000	0.0108	0.0108	0.0000	720.5054	720.5054	0.0125	0.0000	720.7670
2039	0.0784	0.3727	3.2356	7.0100e-003	0.0000	0.0108	0.0108	0.0000	0.0108	0.0108	0.0000	720.5054	720.5054	0.0125	0.0000	720.7670
2040	0.0790	0.3793	3.2396	7.0200e-003	0.0000	0.0111	0.0111	0.0000	0.0111	0.0111	0.0000	721.3765	721.3765	0.0125	0.0000	721.6383
2041	0.0790	0.3793	3.2396	7.0200e-003	0.0000	0.0111	0.0111	0.0000	0.0111	0.0111	0.0000	721.3765	721.3765	0.0125	0.0000	721.6383
2042	0.0790	0.3793	3.2396	7.0200e-003	0.0000	0.0111	0.0111	0.0000	0.0111	0.0111	0.0000	721.3765	721.3765	0.0125	0.0000	721.6383
2043	0.1177	0.5601	4.8647	0.0105	0.0000	0.0166	0.0166	0.0000	0.0166	0.0166	0.0000	1,082.1759	1,082.1759	0.0182	0.0000	1,082.5576
2044	0.1177	0.5601	4.8647	0.0105	0.0000	0.0166	0.0166	0.0000	0.0166	0.0166	0.0000	1,082.1759	1,082.1759	0.0182	0.0000	1,082.5576
2045	0.1177	0.5601	4.8647	0.0105	0.0000	0.0166	0.0166	0.0000	0.0166	0.0166	0.0000	1,082.1759	1,082.1759	0.0182	0.0000	1,082.5576
2046	0.1177	0.5601	4.8647	0.0105	0.0000	0.0166	0.0166	0.0000	0.0166	0.0166	0.0000	1,082.1759	1,082.1759	0.0182	0.0000	1,082.5576
2047	0.1177	0.5601	4.8647	0.0105	0.0000	0.0166	0.0166	0.0000	0.0166	0.0166	0.0000	1,082.1759	1,082.1759	0.0182	0.0000	1,082.5576
2048	0.1177	0.5601	4.8647	0.0105	0.0000	0.0166	0.0166	0.0000	0.0166	0.0166	0.0000	1,082.1759	1,082.1759	0.0182	0.0000	1,082.5576
2049	0.1163	0.5530	4.8031	0.0104	0.0000	0.0164	0.0164	0.0000	0.0164	0.0164	0.0000	1,068.4774	1,068.4774	0.0180	0.0000	1,068.8544
Total	**4.7515**	**19.4796**	**205.3228**	**0.4438**	**0.0000**	**0.5744**	**0.5744**	**0.0000**	**0.5744**	**0.5744**	**0.0000**	**45,216.0055**	**45,216.0055**	**1.7765**	**0.0000**	**45,253.3124**

	ROG	NOx	CO	SO2	Fugitive PM10	Exhaust PM10	PM10 Total	Fugitive PM2.5	Exhaust PM2.5	PM2.5 Total	Bio- CO2	NBio-CO2	Total CO2	CH4	N20	CO2e
Percent Reduction	**63.40**	**76.31**	**-121.21**	**0.00**	**0.00**	**77.78**	**77.78**	**0.00**	**77.42**	**77.42**	**0.00**	**0.00**	**0.00**	**0.00**	**0.00**	**0.00**

2.2 Overall Operational

Unmitigated Operational

	ROG	NOx	CO	SO2	Fugitive PM10	Exhaust PM10	PM10 Total	Fugitive PM2.5	Exhaust PM2.5	PM2.5 Total	Bio- CO2	NBio- CO2	Total CO2	CH4	N2O	CO2e
Category	tons/yr										MT/yr					
Area	0.0000					0.0000	0.0000		0.0000	0.0000	0.0000	0.0000	0.0000	0.0000	0.0000	0.0000
Energy	0.0000	0.0000	0.0000	0.0000		0.0000	0.0000		0.0000	0.0000	0.0000	0.0000	0.0000	0.0000	0.0000	0.0000
Mobile	0.0000	0.0000	0.0000	0.0000	0.0000	0.0000	0.0000	0.0000	0.0000	0.0000	0.0000	0.0000	0.0000	0.0000	0.0000	0.0000
Waste						0.0000	0.0000		0.0000	0.0000	0.0000	0.0000	0.0000	0.0000	0.0000	0.0000
Water						0.0000	0.0000		0.0000	0.0000	0.0000	0.0000	0.0000	0.0000	0.0000	0.0000
Total	**0.0000**	**0.0000**	**0.0000**	**0.0000**	**0.0000**	**0.0000**	**0.0000**	**0.0000**	**0.0000**	**0.0000**	**0.0000**	**0.0000**	**0.0000**	**0.0000**	**0.0000**	**0.0000**

2.2 Overall Operational

Mitigated Operational

	ROG	NOx	CO	SO2	Fugitive PM10	Exhaust PM10	PM10 Total	Fugitive PM2.5	Exhaust PM2.5	PM2.5 Total	Bio- CO2	NBio- CO2	Total CO2	CH4	N2O	CO2e
Category	tons/yr										MT/yr					
Area	0.0000					0.0000	0.0000		0.0000	0.0000	0.0000	0.0000	0.0000	0.0000	0.0000	0.0000
Energy	0.0000	0.0000	0.0000	0.0000		0.0000	0.0000		0.0000	0.0000	0.0000	0.0000	0.0000	0.0000	0.0000	0.0000
Mobile	0.0000	0.0000	0.0000	0.0000	0.0000	0.0000	0.0000	0.0000	0.0000	0.0000	0.0000	0.0000	0.0000	0.0000	0.0000	0.0000
Waste						0.0000	0.0000		0.0000	0.0000	0.0000	0.0000	0.0000	0.0000	0.0000	0.0000
Water						0.0000	0.0000		0.0000	0.0000	0.0000	0.0000	0.0000	0.0000	0.0000	0.0000
Total	**0.0000**	**0.0000**	**0.0000**	**0.0000**	**0.0000**	**0.0000**	**0.0000**	**0.0000**	**0.0000**	**0.0000**	**0.0000**	**0.0000**	**0.0000**	**0.0000**	**0.0000**	**0.0000**

	ROG	**NOx**	**CO**	**SO2**	**Fugitive PM10**	**Exhaust PM10**	**PM10 Total**	**Fugitive PM2.5**	**Exhaust PM2.5**	**PM2.5 Total**	**Bio- CO2**	**NBio-CO2**	**Total CO2**	**CH4**	**N20**	**CO2e**
Percent Reduction	**0.00**	**0.00**	**0.00**	**0.00**	**0.00**	**0.00**	**0.00**	**0.00**	**0.00**	**0.00**	**0.00**	**0.00**	**0.00**	**0.00**	**0.00**	**0.00**

3.0 Construction Detail

Construction Phase

Phase Number	Phase Name	Phase Type	Start Date	End Date	Num Days Week	Num Days	Phase Description
1	Year -1	Building Construction	1/1/2019	12/31/2019	6	313	
2	Year 1	Building Construction	1/1/2020	12/31/2020	6	314	
3	Year 2	Building Construction	10/1/2021	10/30/2021	6	26	

4	Year 3	Building Construction	10/1/2022	10/31/2022	6	26	
5	Year 4	Building Construction	10/1/2023	10/31/2023	6	26	
6	Year 5	Building Construction	1/1/2024	12/31/2024	6	314	
7	Year 6	Building Construction	4/1/2025	10/31/2025	6	184	
8	Year 7	Building Construction	7/1/2026	10/31/2026	6	106	
9	Year 8	Building Construction	9/1/2027	10/30/2027	6	52	
10	Year 9	Building Construction	9/1/2028	10/31/2028	6	52	
11	Year 10	Building Construction	7/1/2029	10/31/2029	6	105	
12	Year 11	Building Construction	4/1/2030	10/31/2030	6	184	
13	Year 12	Building Construction	5/1/2031	10/31/2031	6	158	
14	Year 13	Building Construction	6/1/2032	10/29/2032	6	130	
15	Year 14	Building Construction	9/1/2033	10/31/2033	6	52	
16	Year 15	Building Construction	6/1/2034	10/31/2034	6	131	
17	Year 16	Building Construction	5/1/2035	10/31/2035	6	158	
18	Year 17	Building Construction	3/1/2036	10/31/2036	6	210	
19	Year 18	Building Construction	8/1/2037	10/31/2037	6	79	
20	Year 19	Building Construction	8/1/2038	10/30/2038	6	78	
21	Year 20	Building Construction	8/1/2039	10/29/2039	6	78	
22	Year 21	Building Construction	8/1/2040	10/31/2040	6	79	
23	Year 22	Building Construction	8/1/2041	10/31/2041	6	79	
24	Year 23	Building Construction	8/1/2042	10/31/2042	6	79	
25	Year 24	Building Construction	8/1/2043	10/31/2043	6	79	
26	Year 25	Building Construction	8/1/2044	10/31/2044	6	79	
27	Year 26	Building Construction	8/1/2045	10/31/2045	6	79	
28	Year 27	Building Construction	8/1/2046	10/31/2046	6	79	
29	Year 28	Building Construction	8/1/2047	10/31/2047	6	79	
30	Year 29	Building Construction	8/1/2048	10/31/2048	6	79	
31	Year 30	Building Construction	8/1/2049	10/31/2049	6	79	

Acres of Grading (Site Preparation Phase): 0

Acres of Grading (Grading Phase): 0

Acres of Paving: 0

Residential Indoor: 0; Residential Outdoor: 0; Non-Residential Indoor: 0; Non-Residential Outdoor: 0 (Architectural Coating – sqft)

OffRoad Equipment

Phase Name	Offroad Equipment Type	Amount	Usage Hours	Horse Power	Load Factor
Year -1	Cranes	1	3.10	38	0.29
Year -1	Cranes	1	0.70	240	0.29
Year -1	Generator Sets	2	16.10	600	0.74
Year -1	Generator Sets	1	23.90	550	0.74
Year -1	Other Construction Equipment	1	1.90	210	0.42
Year -1	Other Construction Equipment	1	1.00	210	0.42
Year -1	Other Construction Equipment	1	5.40	180	0.42
Year -1	Other Construction Equipment	1	2.10	475	0.42
Year -1	Other Construction Equipment	1	2.10	180	0.42
Year -1	Other Construction Equipment	1	19.00	385	0.42
Year -1	Other Construction Equipment	1	3.00	630	0.42
Year -1	Other Construction Equipment	1	3.00	365	0.42
Year -1	Other Construction Equipment	1	3.00	245	0.42
Year -1	Other Construction Equipment	1	6.90	210	0.42
Year -1	Tractors/Loaders/Backhoes	1	1.70	100	0.37
Year -1	Welders	1	5.10	42	0.45
Year 1	Cranes	1	2.30	38	0.29
Year 1	Cranes	1	0.50	240	0.29
Year 1	Generator Sets	2	12.40	600	0.74
Year 1	Generator Sets	1	18.40	550	0.74

Year 1	Other Construction Equipment	1	1.80	210	0.42
Year 1	Other Construction Equipment	1	2.90	210	0.42
Year 1	Other Construction Equipment	1	4.20	180	0.42
Year 1	Other Construction Equipment	1	1.50	475	0.42
Year 1	Other Construction Equipment	1	1.50	180	0.42
Year 1	Other Construction Equipment	1	14.70	385	0.42
Year 1	Other Construction Equipment	1	2.40	630	0.42
Year 1	Other Construction Equipment	1	2.40	365	0.42
Year 1	Other Construction Equipment	1	2.40	245	0.42
Year 1	Other Construction Equipment	1	9.40	210	0.42
Year 1	Tractors/Loaders/Backhoes	1	1.30	100	0.37
Year 1	Welders	1	3.90	42	0.45
Year 2	Cranes	1	1.20	38	0.29
Year 2	Cranes	1	0.40	240	0.29
Year 2	Generator Sets	1	7.80	600	0.74
Year 2	Generator Sets	1	5.80	550	0.74
Year 2	Other Construction Equipment	1	0.80	210	0.42
Year 2	Other Construction Equipment	1	0.40	210	0.42
Year 2	Other Construction Equipment	1	0.80	180	0.42
Year 2	Other Construction Equipment	1	1.20	475	0.42
Year 2	Other Construction Equipment	1	1.20	180	0.42
Year 2	Other Construction Equipment	1	4.30	385	0.42
Year 2	Other Construction Equipment	1	0.70	630	0.42
Year 2	Other Construction Equipment	1	0.70	365	0.42
Year 2	Other Construction Equipment	1	0.70	245	0.42
Year 2	Other Construction Equipment	1	2.80	210	0.42
Year 2	Tractors/Loaders/Backhoes	1	0.40	100	0.37
Year 2	Welders	1	1.20	42	0.45

Year 3	Cranes	1	2.30	38	0.29
Year 3	Cranes	1	0.80	240	0.29
Year 3	Generator Sets	1	15.70	600	0.74
Year 3	Generator Sets	1	11.60	550	0.74
Year 3	Other Construction Equipment	1	1.50	210	0.42
Year 3	Other Construction Equipment	1	0.80	210	0.42
Year 3	Other Construction Equipment	1	1.50	180	0.42
Year 3	Other Construction Equipment	1	2.30	475	0.42
Year 3	Other Construction Equipment	1	2.30	180	0.42
Year 3	Other Construction Equipment	1	8.60	385	0.42
Year 3	Other Construction Equipment	1	1.40	630	0.42
Year 3	Other Construction Equipment	1	1.40	365	0.42
Year 3	Other Construction Equipment	1	1.40	245	0.42
Year 3	Other Construction Equipment	1	5.50	210	0.42
Year 3	Tractors/Loaders/Backhoes	1	0.80	100	0.37
Year 3	Welders	1	2.30	42	0.45
Year 4	Cranes	1	2.30	38	0.29
Year 4	Cranes	1	0.80	240	0.29
Year 4	Generator Sets	1	15.70	600	0.74
Year 4	Generator Sets	1	11.60	550	0.74
Year 4	Other Construction Equipment	1	1.50	210	0.42
Year 4	Other Construction Equipment	1	0.80	210	0.42
Year 4	Other Construction Equipment	1	1.50	180	0.42
Year 4	Other Construction Equipment	1	2.30	475	0.42
Year 4	Other Construction Equipment	1	2.30	180	0.42
Year 4	Other Construction Equipment	1	8.60	385	0.42
Year 4	Other Construction Equipment	1	1.40	630	0.42
Year 4	Other Construction Equipment	1	1.40	365	0.42

Year 4	Other Construction Equipment	1	1.40	245	0.42
Year 4	Other Construction Equipment	1	5.50	210	0.42
Year 4	Tractors/Loaders/Backhoes	1	0.80	100	0.37
Year 4	Welders	1	2.30	42	0.45
Year 5	Cranes	1	4.10	38	0.29
Year 5	Cranes	1	1.10	240	0.29
Year 5	Generator Sets	2	19.60	600	0.74
Year 5	Generator Sets	2	14.60	550	0.74
Year 5	Other Construction Equipment	1	3.10	210	0.42
Year 5	Other Construction Equipment	1	4.00	210	0.42
Year 5	Other Construction Equipment	1	6.10	180	0.42
Year 5	Other Construction Equipment	1	3.20	475	0.42
Year 5	Other Construction Equipment	1	3.20	180	0.42
Year 5	Other Construction Equipment	1	22.90	385	0.42
Year 5	Other Construction Equipment	1	3.70	630	0.42
Year 5	Other Construction Equipment	1	3.70	365	0.42
Year 5	Other Construction Equipment	1	3.70	245	0.42
Year 5	Other Construction Equipment	1	14.70	210	0.42
Year 5	Tractors/Loaders/Backhoes	1	2.00	100	0.37
Year 5	Welders	1	6.10	42	0.45
Year 6	Cranes	1	2.70	38	0.29
Year 6	Cranes	1	0.70	240	0.29
Year 6	Generator Sets	2	12.60	600	0.74
Year 6	Generator Sets	1	18.70	550	0.74
Year 6	Other Construction Equipment	1	2.00	210	0.42
Year 6	Other Construction Equipment	1	2.50	210	0.42
Year 6	Other Construction Equipment	1	3.80	180	0.42
Year 6	Other Construction Equipment	1	2.10	475	0.42

Year 6	Other Construction Equipment	1	2.10	180	0.42
Year 6	Other Construction Equipment	1	14.70	385	0.42
Year 6	Other Construction Equipment	1	2.30	630	0.42
Year 6	Other Construction Equipment	1	2.30	365	0.42
Year 6	Other Construction Equipment	1	2.30	245	0.42
Year 6	Other Construction Equipment	1	9.40	210	0.42
Year 6	Tractors/Loaders/Backhoes	1	1.30	100	0.37
Year 6	Welders	1	3.90	42	0.45
Year 7	Cranes	1	2.80	38	0.29
Year 7	Cranes	1	0.80	240	0.29
Year 7	Generator Sets	2	12.80	600	0.74
Year 7	Generator Sets	1	19.00	550	0.74
Year 7	Other Construction Equipment	1	2.10	210	0.42
Year 7	Other Construction Equipment	1	2.50	210	0.42
Year 7	Other Construction Equipment	1	3.80	180	0.42
Year 7	Other Construction Equipment	1	2.30	475	0.42
Year 7	Other Construction Equipment	1	2.30	180	0.42
Year 7	Other Construction Equipment	1	14.90	385	0.42
Year 7	Other Construction Equipment	1	2.40	630	0.42
Year 7	Other Construction Equipment	1	2.40	365	0.42
Year 7	Other Construction Equipment	1	2.40	245	0.42
Year 7	Other Construction Equipment	1	9.50	210	0.42
Year 7	Tractors/Loaders/Backhoes	1	1.30	100	0.37
Year 7	Welders	1	4.00	42	0.45
Year 8	Cranes	1	2.90	38	0.29
Year 8	Cranes	1	1.00	240	0.29
Year 8	Generator Sets	1	19.60	600	0.74
Year 8	Generator Sets	1	14.50	550	0.74

Year 8	Other Construction Equipment	1	1.90	210	0.42
Year 8	Other Construction Equipment	1	1.00	210	0.42
Year 8	Other Construction Equipment	1	1.90	180	0.42
Year 8	Other Construction Equipment	1	2.90	475	0.42
Year 8	Other Construction Equipment	1	2.90	180	0.42
Year 8	Other Construction Equipment	1	10.80	385	0.42
Year 8	Other Construction Equipment	1	1.70	630	0.42
Year 8	Other Construction Equipment	1	1.70	365	0.42
Year 8	Other Construction Equipment	1	1.70	245	0.42
Year 8	Other Construction Equipment	1	6.90	210	0.42
Year 8	Tractors/Loaders/Backhoes	1	1.00	100	0.37
Year 8	Welders	1	2.90	42	0.45
Year 9	Cranes	1	2.30	38	0.29
Year 9	Cranes	1	0.80	240	0.29
Year 9	Generator Sets	1	15.70	600	0.74
Year 9	Generator Sets	1	11.60	550	0.74
Year 9	Other Construction Equipment	1	1.50	210	0.42
Year 9	Other Construction Equipment	1	0.80	210	0.42
Year 9	Other Construction Equipment	1	1.50	180	0.42
Year 9	Other Construction Equipment	1	2.30	475	0.42
Year 9	Other Construction Equipment	1	2.30	180	0.42
Year 9	Other Construction Equipment	1	8.60	385	0.42
Year 9	Other Construction Equipment	1	1.40	630	0.42
Year 9	Other Construction Equipment	1	1.40	365	0.42
Year 9	Other Construction Equipment	1	1.40	245	0.42
Year 9	Other Construction Equipment	1	5.50	210	0.42
Year 9	Tractors/Loaders/Backhoes	1	0.80	100	0.37
Year 9	Welders	1	2.30	42	0.45

Year 10	Cranes	1	3.00	38	0.29
Year 10	Cranes	1	0.90	240	0.29
Year 10	Generator Sets	2	13.00	600	0.74
Year 10	Generator Sets	1	19.40	550	0.74
Year 10	Other Construction Equipment	1	2.20	210	0.42
Year 10	Other Construction Equipment	1	2.30	210	0.42
Year 10	Other Construction Equipment	1	3.60	180	0.42
Year 10	Other Construction Equipment	1	2.60	475	0.42
Year 10	Other Construction Equipment	1	2.60	180	0.42
Year 10	Other Construction Equipment	1	15.00	385	0.42
Year 10	Other Construction Equipment	1	2.40	630	0.42
Year 10	Other Construction Equipment	1	2.40	365	0.42
Year 10	Other Construction Equipment	1	2.40	245	0.42
Year 10	Other Construction Equipment	1	9.60	210	0.42
Year 10	Tractors/Loaders/Backhoes	1	1.30	100	0.37
Year 10	Welders	1	4.00	42	0.45
Year 11	Cranes	1	2.90	38	0.29
Year 11	Cranes	1	0.80	240	0.29
Year 11	Generator Sets	2	12.70	600	0.74
Year 11	Generator Sets	1	18.90	550	0.74
Year 11	Other Construction Equipment	1	2.10	210	0.42
Year 11	Other Construction Equipment	1	2.30	210	0.42
Year 11	Other Construction Equipment	1	3.60	180	0.42
Year 11	Other Construction Equipment	1	2.40	475	0.42
Year 11	Other Construction Equipment	1	2.40	180	0.42
Year 11	Other Construction Equipment	1	14.70	385	0.42
Year 11	Other Construction Equipment	1	2.30	630	0.42
Year 11	Other Construction Equipment	1	2.30	365	0.42

Year 11	Other Construction Equipment	1	2.30	245	0.42
Year 11	Other Construction Equipment	1	9.40	210	0.42
Year 11	Tractors/Loaders/Backhoes	1	1.40	100	0.37
Year 11	Welders	1	3.90	42	0.45
Year 12	Cranes	1	2.70	38	0.29
Year 12	Cranes	1	0.80	240	0.29
Year 12	Generator Sets	1	22.30	600	0.74
Year 12	Generator Sets	1	16.60	550	0.74
Year 12	Other Construction Equipment	1	1.90	210	0.42
Year 12	Other Construction Equipment	1	1.90	210	0.42
Year 12	Other Construction Equipment	1	3.00	180	0.42
Year 12	Other Construction Equipment	1	2.30	475	0.42
Year 12	Other Construction Equipment	1	2.30	180	0.42
Year 12	Other Construction Equipment	1	12.80	385	0.42
Year 12	Other Construction Equipment	1	2.10	630	0.42
Year 12	Other Construction Equipment	1	2.10	365	0.42
Year 12	Other Construction Equipment	1	2.10	245	0.42
Year 12	Other Construction Equipment	1	8.20	210	0.42
Year 12	Tractors/Loaders/Backhoes	1	1.10	100	0.37
Year 12	Welders	1	3.40	42	0.45
Year 13	Cranes	1	2.70	38	0.29
Year 13	Cranes	1	0.80	240	0.29
Year 13	Generator Sets	1	22.60	600	0.74
Year 13	Generator Sets	1	16.80	550	0.74
Year 13	Other Construction Equipment	1	1.90	210	0.42
Year 13	Other Construction Equipment	1	1.90	210	0.42
Year 13	Other Construction Equipment	1	3.10	180	0.42
Year 13	Other Construction Equipment	1	2.30	475	0.42

Year 13	Other Construction Equipment	1	2.30	180	0.42
Year 13	Other Construction Equipment	1	13.00	385	0.42
Year 13	Other Construction Equipment	1	2.10	630	0.42
Year 13	Other Construction Equipment	1	2.10	365	0.42
Year 13	Other Construction Equipment	1	2.10	245	0.42
Year 13	Other Construction Equipment	1	8.30	210	0.42
Year 13	Tractors/Loaders/Backhoes	1	1.20	100	0.37
Year 13	Welders	1	3.50	42	0.45
Year 14	Cranes	1	2.90	38	0.29
Year 14	Cranes	1	1.00	240	0.29
Year 14	Generator Sets	1	19.60	600	0.74
Year 14	Generator Sets	1	14.50	550	0.74
Year 14	Other Construction Equipment	1	1.90	210	0.42
Year 14	Other Construction Equipment	1	1.00	210	0.42
Year 14	Other Construction Equipment	1	1.90	180	0.42
Year 14	Other Construction Equipment	1	2.90	475	0.42
Year 14	Other Construction Equipment	1	2.90	180	0.42
Year 14	Other Construction Equipment	1	10.80	385	0.42
Year 14	Other Construction Equipment	1	1.70	630	0.42
Year 14	Other Construction Equipment	1	1.70	365	0.42
Year 14	Other Construction Equipment	1	1.70	245	0.42
Year 14	Other Construction Equipment	1	6.90	210	0.42
Year 14	Tractors/Loaders/Backhoes	1	1.00	100	0.37
Year 14	Welders	1	2.90	42	0.45
Year 15	Cranes	1	3.10	38	0.29
Year 15	Cranes	1	0.90	240	0.29
Year 15	Generator Sets	2	12.10	600	0.74
Year 15	Generator Sets	1	18.00	550	0.74

Year 15	Other Construction Equipment	1	2.10	210	0.42
Year 15	Other Construction Equipment	1	1.80	210	0.42
Year 15	Other Construction Equipment	1	3.10	180	0.42
Year 15	Other Construction Equipment	1	2.70	475	0.42
Year 15	Other Construction Equipment	1	2.70	180	0.42
Year 15	Other Construction Equipment	1	13.70	385	0.42
Year 15	Other Construction Equipment	1	2.20	630	0.42
Year 15	Other Construction Equipment	1	2.20	365	0.42
Year 15	Other Construction Equipment	1	2.20	245	0.42
Year 15	Other Construction Equipment	1	8.80	210	0.42
Year 15	Tractors/Loaders/Backhoes	1	1.20	100	0.37
Year 15	Welders	1	3.70	42	0.45
Year 16	Cranes	1	2.80	38	0.29
Year 16	Cranes	1	0.80	240	0.29
Year 16	Generator Sets	2	12.90	600	0.74
Year 16	Generator Sets	1	19.10	550	0.74
Year 16	Other Construction Equipment	1	2.10	210	0.42
Year 16	Other Construction Equipment	1	2.50	210	0.42
Year 16	Other Construction Equipment	1	3.80	180	0.42
Year 16	Other Construction Equipment	1	2.30	475	0.42
Year 16	Other Construction Equipment	1	2.30	180	0.42
Year 16	Other Construction Equipment	1	14.90	385	0.42
Year 16	Other Construction Equipment	1	2.40	630	0.42
Year 16	Other Construction Equipment	1	2.40	365	0.42
Year 16	Other Construction Equipment	1	2.40	245	0.42
Year 16	Other Construction Equipment	1	9.60	210	0.42
Year 16	Tractors/Loaders/Backhoes	1	1.30	100	0.37
Year 16	Welders	1	4.00	42	0.45

Year 17	Cranes	1	3.60	38	0.29
Year 17	Cranes	1	1.20	240	0.29
Year 17	Generator Sets	2	12.10	600	0.74
Year 17	Generator Sets	1	18.00	550	0.74
Year 17	Other Construction Equipment	1	2.40	210	0.42
Year 17	Other Construction Equipment	1	1.20	210	0.42
Year 17	Other Construction Equipment	1	2.40	180	0.42
Year 17	Other Construction Equipment	1	3.60	475	0.42
Year 17	Other Construction Equipment	1	3.60	180	0.42
Year 17	Other Construction Equipment	1	13.40	385	0.42
Year 17	Other Construction Equipment	1	2.10	630	0.42
Year 17	Other Construction Equipment	1	2.10	365	0.42
Year 17	Other Construction Equipment	1	2.10	245	0.42
Year 17	Other Construction Equipment	1	8.60	210	0.42
Year 17	Tractors/Loaders/Backhoes	1	1.20	100	0.37
Year 17	Welders	1	3.60	42	0.45
Year 18	Cranes	1	2.70	38	0.29
Year 18	Cranes	1	0.90	240	0.29
Year 18	Generator Sets	1	18.10	600	0.74
Year 18	Generator Sets	1	13.40	550	0.74
Year 18	Other Construction Equipment	1	1.80	210	0.42
Year 18	Other Construction Equipment	1	0.90	210	0.42
Year 18	Other Construction Equipment	1	1.80	180	0.42
Year 18	Other Construction Equipment	1	2.70	475	0.42
Year 18	Other Construction Equipment	1	2.70	180	0.42
Year 18	Other Construction Equipment	1	10.00	385	0.42
Year 18	Other Construction Equipment	1	1.60	630	0.42
Year 18	Other Construction Equipment	1	1.60	365	0.42

Year 18	Other Construction Equipment	1	1.60	245	0.42
Year 18	Other Construction Equipment	1	6.40	210	0.42
Year 18	Tractors/Loaders/Backhoes	1	0.90	100	0.37
Year 18	Welders	1	2.70	42	0.45
Year 19	Cranes	1	2.70	38	0.29
Year 19	Cranes	1	0.90	240	0.29
Year 19	Generator Sets	1	18.30	600	0.74
Year 19	Generator Sets	1	13.60	550	0.74
Year 19	Other Construction Equipment	1	1.80	210	0.42
Year 19	Other Construction Equipment	1	0.90	210	0.42
Year 19	Other Construction Equipment	1	1.80	180	0.42
Year 19	Other Construction Equipment	1	2.70	475	0.42
Year 19	Other Construction Equipment	1	2.70	180	0.42
Year 19	Other Construction Equipment	1	10.10	385	0.42
Year 19	Other Construction Equipment	1	1.60	630	0.42
Year 19	Other Construction Equipment	1	1.60	365	0.42
Year 19	Other Construction Equipment	1	1.60	245	0.42
Year 19	Other Construction Equipment	1	6.50	210	0.42
Year 19	Tractors/Loaders/Backhoes	1	0.90	100	0.37
Year 19	Welders	1	2.70	42	0.45
Year 20	Cranes	1	2.70	38	0.29
Year 20	Cranes	1	0.90	240	0.29
Year 20	Generator Sets	1	18.30	600	0.74
Year 20	Generator Sets	1	13.60	550	0.74
Year 20	Other Construction Equipment	1	1.80	210	0.42
Year 20	Other Construction Equipment	1	0.90	210	0.42
Year 20	Other Construction Equipment	1	1.80	180	0.42
Year 20	Other Construction Equipment	1	2.70	475	0.42

Year 20	Other Construction Equipment	1	2.70	180	0.42
Year 20	Other Construction Equipment	1	10.10	385	0.42
Year 20	Other Construction Equipment	1	1.60	630	0.42
Year 20	Other Construction Equipment	1	1.60	365	0.42
Year 20	Other Construction Equipment	1	1.60	245	0.42
Year 20	Other Construction Equipment	1	6.50	210	0.42
Year 20	Tractors/Loaders/Backhoes	1	0.90	100	0.37
Year 20	Welders	1	2.70	42	0.45
Year 21	Cranes	1	2.70	38	0.29
Year 21	Cranes	1	0.90	240	0.29
Year 21	Generator Sets	1	18.10	600	0.74
Year 21	Generator Sets	1	13.40	550	0.74
Year 21	Other Construction Equipment	1	1.80	210	0.42
Year 21	Other Construction Equipment	1	0.90	210	0.42
Year 21	Other Construction Equipment	1	1.80	180	0.42
Year 21	Other Construction Equipment	1	2.70	475	0.42
Year 21	Other Construction Equipment	1	2.70	180	0.42
Year 21	Other Construction Equipment	1	10.00	385	0.42
Year 21	Other Construction Equipment	1	1.60	630	0.42
Year 21	Other Construction Equipment	1	1.60	365	0.42
Year 21	Other Construction Equipment	1	1.60	245	0.42
Year 21	Other Construction Equipment	1	6.40	210	0.42
Year 21	Tractors/Loaders/Backhoes	1	0.90	100	0.37
Year 21	Welders	1	2.70	42	0.45
Year 22	Cranes	1	2.70	38	0.29
Year 22	Cranes	1	0.90	240	0.29
Year 22	Generator Sets	1	18.10	600	0.74
Year 22	Generator Sets	1	13.40	550	0.74

Year 22	Other Construction Equipment	1	1.80	210	0.42
Year 22	Other Construction Equipment	1	0.90	210	0.42
Year 22	Other Construction Equipment	1	1.80	180	0.42
Year 22	Other Construction Equipment	1	2.70	475	0.42
Year 22	Other Construction Equipment	1	2.70	180	0.42
Year 22	Other Construction Equipment	1	10.00	385	0.42
Year 22	Other Construction Equipment	1	1.60	630	0.42
Year 22	Other Construction Equipment	1	1.60	365	0.42
Year 22	Other Construction Equipment	1	1.60	245	0.42
Year 22	Other Construction Equipment	1	6.40	210	0.42
Year 22	Tractors/Loaders/Backhoes	1	0.90	100	0.37
Year 22	Welders	1	2.70	42	0.45
Year 23	Cranes	1	2.70	38	0.29
Year 23	Cranes	1	0.90	240	0.29
Year 23	Generator Sets	1	18.10	600	0.74
Year 23	Generator Sets	1	13.40	550	0.74
Year 23	Other Construction Equipment	1	1.80	210	0.42
Year 23	Other Construction Equipment	1	0.90	210	0.42
Year 23	Other Construction Equipment	1	1.80	180	0.42
Year 23	Other Construction Equipment	1	2.70	475	0.42
Year 23	Other Construction Equipment	1	2.70	180	0.42
Year 23	Other Construction Equipment	1	10.00	385	0.42
Year 23	Other Construction Equipment	1	1.60	630	0.42
Year 23	Other Construction Equipment	1	1.60	365	0.42
Year 23	Other Construction Equipment	1	1.60	245	0.42
Year 23	Other Construction Equipment	1	6.40	210	0.42
Year 23	Tractors/Loaders/Backhoes	1	0.90	100	0.37
Year 23	Welders	1	2.70	42	0.45

Year 24	Cranes	1	2.70	38	0.29
Year 24	Cranes	1	0.90	240	0.29
Year 24	Generator Sets	2	18.10	600	0.74
Year 24	Generator Sets	1	13.40	550	0.74
Year 24	Other Construction Equipment	1	1.80	210	0.42
Year 24	Other Construction Equipment	1	0.90	210	0.42
Year 24	Other Construction Equipment	1	1.80	180	0.42
Year 24	Other Construction Equipment	1	2.70	475	0.42
Year 24	Other Construction Equipment	1	2.70	180	0.42
Year 24	Other Construction Equipment	1	10.00	385	0.42
Year 24	Other Construction Equipment	1	1.60	630	0.42
Year 24	Other Construction Equipment	1	1.60	365	0.42
Year 24	Other Construction Equipment	1	1.60	245	0.42
Year 24	Other Construction Equipment	1	6.40	210	0.42
Year 24	Tractors/Loaders/Backhoes	1	0.90	100	0.37
Year 24	Welders	1	2.70	42	0.45
Year 25	Cranes	1	2.70	38	0.29
Year 25	Cranes	1	0.90	240	0.29
Year 25	Generator Sets	2	18.10	600	0.74
Year 25	Generator Sets	1	13.40	550	0.74
Year 25	Other Construction Equipment	1	1.80	210	0.42
Year 25	Other Construction Equipment	1	0.90	210	0.42
Year 25	Other Construction Equipment	1	1.80	180	0.42
Year 25	Other Construction Equipment	1	2.70	475	0.42
Year 25	Other Construction Equipment	1	2.70	180	0.42
Year 25	Other Construction Equipment	1	10.00	385	0.42
Year 25	Other Construction Equipment	1	1.60	630	0.42
Year 25	Other Construction Equipment	1	1.60	365	0.42

Year 25	Other Construction Equipment	1	1.60	245	0.42
Year 25	Other Construction Equipment	1	6.40	210	0.42
Year 25	Tractors/Loaders/Backhoes	1	0.90	100	0.37
Year 25	Welders	1	2.70	42	0.45
Year 26	Cranes	1	2.70	38	0.29
Year 26	Cranes	1	0.90	240	0.29
Year 26	Generator Sets	2	18.10	600	0.74
Year 26	Generator Sets	1	13.40	550	0.74
Year 26	Other Construction Equipment	1	1.80	210	0.42
Year 26	Other Construction Equipment	1	0.90	210	0.42
Year 26	Other Construction Equipment	1	1.80	180	0.42
Year 26	Other Construction Equipment	1	2.70	475	0.42
Year 26	Other Construction Equipment	1	2.70	180	0.42
Year 26	Other Construction Equipment	1	10.00	385	0.42
Year 26	Other Construction Equipment	1	1.60	630	0.42
Year 26	Other Construction Equipment	1	1.60	365	0.42
Year 26	Other Construction Equipment	1	1.60	245	0.42
Year 26	Other Construction Equipment	1	6.40	210	0.42
Year 26	Tractors/Loaders/Backhoes	1	0.90	100	0.37
Year 26	Welders	1	2.70	42	0.45
Year 27	Cranes	1	2.70	38	0.29
Year 27	Cranes	1	0.90	240	0.29
Year 27	Generator Sets	2	18.10	600	0.74
Year 27	Generator Sets	1	13.40	550	0.74
Year 27	Other Construction Equipment	1	1.80	210	0.42
Year 27	Other Construction Equipment	1	0.90	210	0.42
Year 27	Other Construction Equipment	1	1.80	180	0.42
Year 27	Other Construction Equipment	1	2.70	475	0.42

Year 27	Other Construction Equipment	1	2.70	180	0.42
Year 27	Other Construction Equipment	1	10.00	385	0.42
Year 27	Other Construction Equipment	1	1.60	630	0.42
Year 27	Other Construction Equipment	1	1.60	365	0.42
Year 27	Other Construction Equipment	1	1.60	245	0.42
Year 27	Other Construction Equipment	1	6.40	210	0.42
Year 27	Tractors/Loaders/Backhoes	1	0.90	100	0.37
Year 27	Welders	1	2.70	42	0.45
Year 28	Cranes	1	2.70	38	0.29
Year 28	Cranes	1	0.90	240	0.29
Year 28	Generator Sets	2	18.10	600	0.74
Year 28	Generator Sets	1	13.40	550	0.74
Year 28	Other Construction Equipment	1	1.80	210	0.42
Year 28	Other Construction Equipment	1	0.90	210	0.42
Year 28	Other Construction Equipment	1	1.80	180	0.42
Year 28	Other Construction Equipment	1	2.70	475	0.42
Year 28	Other Construction Equipment	1	2.70	180	0.42
Year 28	Other Construction Equipment	1	10.00	385	0.42
Year 28	Other Construction Equipment	1	1.60	630	0.42
Year 28	Other Construction Equipment	1	1.60	365	0.42
Year 28	Other Construction Equipment	1	1.60	245	0.42
Year 28	Other Construction Equipment	1	6.40	210	0.42
Year 28	Tractors/Loaders/Backhoes	1	0.90	100	0.37
Year 28	Welders	1	2.70	42	0.45
Year 29	Cranes	1	2.70	38	0.29
Year 29	Cranes	1	0.90	240	0.29
Year 29	Generator Sets	2	18.10	600	0.74
Year 29	Generator Sets	1	13.40	550	0.74

Year 29	Other Construction Equipment	1	1.80	210	0.42
Year 29	Other Construction Equipment	1	0.90	210	0.42
Year 29	Other Construction Equipment	1	1.80	180	0.42
Year 29	Other Construction Equipment	1	2.70	475	0.42
Year 29	Other Construction Equipment	1	2.70	180	0.42
Year 29	Other Construction Equipment	1	10.00	385	0.42
Year 29	Other Construction Equipment	1	1.60	630	0.42
Year 29	Other Construction Equipment	1	1.60	365	0.42
Year 29	Other Construction Equipment	1	1.60	245	0.42
Year 29	Other Construction Equipment	1	6.40	210	0.42
Year 29	Tractors/Loaders/Backhoes	1	0.90	100	0.37
Year 29	Welders	1	2.70	42	0.45
Year 30	Cranes	1	2.70	38	0.29
Year 30	Cranes	1	0.90	240	0.29
Year 30	Generator Sets	2	18.10	600	0.74
Year 30	Generator Sets	1	13.40	550	0.74
Year 30	Other Construction Equipment	1	1.80	210	0.42
Year 30	Other Construction Equipment	1	0.90	210	0.42
Year 30	Other Construction Equipment	1	1.80	180	0.42
Year 30	Other Construction Equipment	1	2.70	475	0.42
Year 30	Other Construction Equipment	1	2.70	180	0.42
Year 30	Other Construction Equipment	1	10.00	385	0.42
Year 30	Other Construction Equipment	1	1.60	630	0.42
Year 30	Other Construction Equipment	1	1.60	365	0.42
Year 30	Other Construction Equipment	1	1.60	245	0.42
Year 30	Other Construction Equipment	1	6.40	210	0.42
Year 30	Tractors/Loaders/Backhoes	1	0.90	100	0.37
Year 30	Welders	1	2.70	42	0.45

Trips and VMT

Phase Name	Offroad Equipment Count	Worker Trip Number	Vendor Trip Number	Hauling Trip Number	Worker Trip Length	Vendor Trip Length	Hauling Trip Length	Worker Vehicle Class	Vendor Vehicle Class	Hauling Vehicle Class
Year -1	17	0.00	0.00	0.00	12.30	4.60	20.00	LD_Mix	HDT_Mix	HHDT
Year 1	17	0.00	0.00	0.00	12.30	4.60	20.00	LD_Mix	HDT_Mix	HHDT
Year 2	16	0.00	0.00	0.00	12.30	4.60	20.00	LD_Mix	HDT_Mix	HHDT
Year 3	16	0.00	0.00	0.00	12.30	4.60	20.00	LD_Mix	HDT_Mix	HHDT
Year 4	16	0.00	0.00	0.00	12.30	4.60	20.00	LD_Mix	HDT_Mix	HHDT
Year 5	18	0.00	0.00	0.00	12.30	4.60	20.00	LD_Mix	HDT_Mix	HHDT
Year 6	17	0.00	0.00	0.00	12.30	4.60	20.00	LD_Mix	HDT_Mix	HHDT
Year 7	17	0.00	0.00	0.00	12.30	4.60	20.00	LD_Mix	HDT_Mix	HHDT
Year 8	16	0.00	0.00	0.00	12.30	4.60	20.00	LD_Mix	HDT_Mix	HHDT
Year 9	16	0.00	0.00	0.00	12.30	4.60	20.00	LD_Mix	HDT_Mix	HHDT
Year 10	17	0.00	0.00	0.00	12.30	4.60	20.00	LD_Mix	HDT_Mix	HHDT
Year 11	17	0.00	0.00	0.00	12.30	4.60	20.00	LD_Mix	HDT_Mix	HHDT
Year 12	16	0.00	0.00	0.00	12.30	4.60	20.00	LD_Mix	HDT_Mix	HHDT
Year 13	16	0.00	0.00	0.00	12.30	4.60	20.00	LD_Mix	HDT_Mix	HHDT
Year 14	16	0.00	0.00	0.00	12.30	4.60	20.00	LD_Mix	HDT_Mix	HHDT
Year 15	17	0.00	0.00	0.00	12.30	4.60	20.00	LD_Mix	HDT_Mix	HHDT
Year 16	17	0.00	0.00	0.00	12.30	4.60	20.00	LD_Mix	HDT_Mix	HHDT
Year 17	17	0.00	0.00	0.00	12.30	4.60	20.00	LD_Mix	HDT_Mix	HHDT
Year 18	16	0.00	0.00	0.00	12.30	4.60	20.00	LD_Mix	HDT_Mix	HHDT
Year 19	16	0.00	0.00	0.00	12.30	4.60	20.00	LD_Mix	HDT_Mix	HHDT
Year 20	16	0.00	0.00	0.00	12.30	4.60	20.00	LD_Mix	HDT_Mix	HHDT
Year 21	16	0.00	0.00	0.00	12.30	4.60	20.00	LD_Mix	HDT_Mix	HHDT
Year 22	16	0.00	0.00	0.00	12.30	4.60	20.00	LD_Mix	HDT_Mix	HHDT
Year 23	16	0.00	0.00	0.00	12.30	4.60	20.00	LD_Mix	HDT_Mix	HHDT

Year 24	17	0.00	0.00	0.00	12.30	4.60	20.00	LD_Mix	HDT_Mix	HHDT
Year 25	17	0.00	0.00	0.00	12.30	4.60	20.00	LD_Mix	HDT_Mix	HHDT
Year 26	17	0.00	0.00	0.00	12.30	4.60	20.00	LD_Mix	HDT_Mix	HHDT
Year 27	17	0.00	0.00	0.00	12.30	4.60	20.00	LD_Mix	HDT_Mix	HHDT
Year 28	17	0.00	0.00	0.00	12.30	4.60	20.00	LD_Mix	HDT_Mix	HHDT
Year 29	17	0.00	0.00	0.00	12.30	4.60	20.00	LD_Mix	HDT_Mix	HHDT
Year 30	17	0.00	0.00	0.00	12.30	4.60	20.00	LD_Mix	HDT_Mix	HHDT

3.1 Mitigation Measures Construction

Use Cleaner Engines for Construction Equipment

3.2 Year -1 - 2019

Unmitigated Construction On-Site

	ROG	NOx	CO	SO2	Fugitive PM10	Exhaust PM10	PM10 Total	Fugitive PM2.5	Exhaust PM2.5	PM2.5 Total	Bio- CO2	NBio- CO2	Total CO2	CH4	N2O	CO2e
Category	tons/yr										MT/yr					
Off-Road	2.0670	21.7162	11.0478	0.0486		0.6790	0.6790		0.6666	0.6666	0.0000	4,913.4085	4,913.4085	0.3353	0.0000	4,920.4498
Total	**2.0670**	**21.7162**	**11.0478**	**0.0486**		**0.6790**	**0.6790**		**0.6666**	**0.6666**	**0.0000**	**4,913.4085**	**4,913.4085**	**0.3353**	**0.0000**	**4,920.4498**

3.2 Year -1 - 2019

Unmitigated Construction Off-Site

	ROG	NOx	CO	SO2	Fugitive PM10	Exhaust PM10	PM10 Total	Fugitive PM2.5	Exhaust PM2.5	PM2.5 Total	Bio- CO2	NBio- CO2	Total CO2	CH4	N2O	CO2e
Category	tons/yr										MT/yr					
Hauling	0.0000	0.0000	0.0000	0.0000	0.0000	0.0000	0.0000	0.0000	0.0000	0.0000	0.0000	0.0000	0.0000	0.0000	0.0000	0.0000
Vendor	0.0000	0.0000	0.0000	0.0000	0.0000	0.0000	0.0000	0.0000	0.0000	0.0000	0.0000	0.0000	0.0000	0.0000	0.0000	0.0000
Worker	0.0000	0.0000	0.0000	0.0000	0.0000	0.0000	0.0000	0.0000	0.0000	0.0000	0.0000	0.0000	0.0000	0.0000	0.0000	0.0000
Total	**0.0000**	**0.0000**	**0.0000**	**0.0000**	**0.0000**	**0.0000**	**0.0000**	**0.0000**	**0.0000**	**0.0000**	**0.0000**	**0.0000**	**0.0000**	**0.0000**	**0.0000**	**0.0000**

Mitigated Construction On-Site

	ROG	NOx	CO	SO2	Fugitive PM10	Exhaust PM10	PM10 Total	Fugitive PM2.5	Exhaust PM2.5	PM2.5 Total	Bio- CO2	NBio- CO2	Total CO2	CH4	N2O	CO2e
Category	tons/yr										MT/yr					
Off-Road	0.4691	1.1150	22.5188	0.0486		0.0331	0.0331		0.0331	0.0331	0.0000	4,913.4026	4,913.4026	0.3353	0.0000	4,920.4439
Total	**0.4691**	**1.1150**	**22.5188**	**0.0486**		**0.0331**	**0.0331**		**0.0331**	**0.0331**	**0.0000**	**4,913.4026**	**4,913.4026**	**0.3353**	**0.0000**	**4,920.4439**

3.2 Year -1 - 2019

Mitigated Construction Off-Site

	ROG	NOx	CO	SO2	Fugitive PM10	Exhaust PM10	PM10 Total	Fugitive PM2.5	Exhaust PM2.5	PM2.5 Total	Bio- CO2	NBio- CO2	Total CO2	CH4	N2O	CO2e
Category	tons/yr										MT/yr					
Hauling	0.0000	0.0000	0.0000	0.0000	0.0000	0.0000	0.0000	0.0000	0.0000	0.0000	0.0000	0.0000	0.0000	0.0000	0.0000	0.0000
Vendor	0.0000	0.0000	0.0000	0.0000	0.0000	0.0000	0.0000	0.0000	0.0000	0.0000	0.0000	0.0000	0.0000	0.0000	0.0000	0.0000
Worker	0.0000	0.0000	0.0000	0.0000	0.0000	0.0000	0.0000	0.0000	0.0000	0.0000	0.0000	0.0000	0.0000	0.0000	0.0000	0.0000
Total	**0.0000**	**0.0000**	**0.0000**	**0.0000**	**0.0000**	**0.0000**	**0.0000**	**0.0000**	**0.0000**	**0.0000**	**0.0000**	**0.0000**	**0.0000**	**0.0000**	**0.0000**	**0.0000**

3.3 Year 1 - 2020

Unmitigated Construction On-Site

	ROG	NOx	CO	SO2	Fugitive PM10	Exhaust PM10	PM10 Total	Fugitive PM2.5	Exhaust PM2.5	PM2.5 Total	Bio- CO2	NBio- CO2	Total CO2	CH4	N2O	CO2e
Category	tons/yr										MT/yr					
Off-Road	1.5116	14.9482	8.4265	0.0376		0.4770	0.4770		0.4680	0.4680	0.0000	3,785.1274	3,785.1274	0.2529	0.0000	3,790.4391
Total	**1.5116**	**14.9482**	**8.4265**	**0.0376**		**0.4770**	**0.4770**		**0.4680**	**0.4680**	**0.0000**	**3,785.1274**	**3,785.1274**	**0.2529**	**0.0000**	**3,790.4391**

3.3 Year 1 - 2020

Unmitigated Construction Off-Site

	ROG	NOx	CO	SO2	Fugitive PM10	Exhaust PM10	PM10 Total	Fugitive PM2.5	Exhaust PM2.5	PM2.5 Total	Bio- CO2	NBio- CO2	Total CO2	CH4	N2O	CO2e
Category	tons/yr										MT/yr					
Hauling	0.0000	0.0000	0.0000	0.0000	0.0000	0.0000	0.0000	0.0000	0.0000	0.0000	0.0000	0.0000	0.0000	0.0000	0.0000	0.0000
Vendor	0.0000	0.0000	0.0000	0.0000	0.0000	0.0000	0.0000	0.0000	0.0000	0.0000	0.0000	0.0000	0.0000	0.0000	0.0000	0.0000
Worker	0.0000	0.0000	0.0000	0.0000	0.0000	0.0000	0.0000	0.0000	0.0000	0.0000	0.0000	0.0000	0.0000	0.0000	0.0000	0.0000
Total	**0.0000**	**0.0000**	**0.0000**	**0.0000**	**0.0000**	**0.0000**	**0.0000**	**0.0000**	**0.0000**	**0.0000**	**0.0000**	**0.0000**	**0.0000**	**0.0000**	**0.0000**	**0.0000**

Mitigated Construction On-Site

	ROG	NOx	CO	SO2	Fugitive PM10	Exhaust PM10	PM10 Total	Fugitive PM2.5	Exhaust PM2.5	PM2.5 Total	Bio- CO2	NBio- CO2	Total CO2	CH4	N2O	CO2e
Category	tons/yr										MT/yr					
Off-Road	0.3694	1.0173	17.3992	0.0376		0.0294	0.0294		0.0294	0.0294	0.0000	3,785.1229	3,785.1229	0.2529	0.0000	3,790.4346
Total	**0.3694**	**1.0173**	**17.3992**	**0.0376**		**0.0294**	**0.0294**		**0.0294**	**0.0294**	**0.0000**	**3,785.1229**	**3,785.1229**	**0.2529**	**0.0000**	**3,790.4346**

3.3 Year 1 - 2020

Mitigated Construction Off-Site

	ROG	NOx	CO	SO2	Fugitive PM10	Exhaust PM10	PM10 Total	Fugitive PM2.5	Exhaust PM2.5	PM2.5 Total	Bio- CO2	NBio- CO2	Total CO2	CH4	N2O	CO2e
Category	tons/yr										MT/yr					
Hauling	0.0000	0.0000	0.0000	0.0000	0.0000	0.0000	0.0000	0.0000	0.0000	0.0000	0.0000	0.0000	0.0000	0.0000	0.0000	0.0000
Vendor	0.0000	0.0000	0.0000	0.0000	0.0000	0.0000	0.0000	0.0000	0.0000	0.0000	0.0000	0.0000	0.0000	0.0000	0.0000	0.0000
Worker	0.0000	0.0000	0.0000	0.0000	0.0000	0.0000	0.0000	0.0000	0.0000	0.0000	0.0000	0.0000	0.0000	0.0000	0.0000	0.0000
Total	**0.0000**	**0.0000**	**0.0000**	**0.0000**	**0.0000**	**0.0000**	**0.0000**	**0.0000**	**0.0000**	**0.0000**	**0.0000**	**0.0000**	**0.0000**	**0.0000**	**0.0000**	**0.0000**

3.4 Year 2 - 2021

Unmitigated Construction On-Site

	ROG	NOx	CO	SO2	Fugitive PM10	Exhaust PM10	PM10 Total	Fugitive PM2.5	Exhaust PM2.5	PM2.5 Total	Bio- CO2	NBio- CO2	Total CO2	CH4	N2O	CO2e
Category	tons/yr										MT/yr					
Off-Road	0.0377	0.3484	0.2227	9.9000e-004		0.0113	0.0113		0.0110	0.0110	0.0000	99.9643	99.9643	6.8600e-003	0.0000	100.1083
Total	**0.0377**	**0.3484**	**0.2227**	**9.9000e-004**		**0.0113**	**0.0113**		**0.0110**	**0.0110**	**0.0000**	**99.9643**	**99.9643**	**6.8600e-003**	**0.0000**	**100.1083**

3.4 Year 2 - 2021

Unmitigated Construction Off-Site

	ROG	NOx	CO	SO2	Fugitive PM10	Exhaust PM10	PM10 Total	Fugitive PM2.5	Exhaust PM2.5	PM2.5 Total	Bio- CO2	NBio- CO2	Total CO2	CH4	N2O	CO2e
Category	tons/yr										MT/yr					
Hauling	0.0000	0.0000	0.0000	0.0000	0.0000	0.0000	0.0000	0.0000	0.0000	0.0000	0.0000	0.0000	0.0000	0.0000	0.0000	0.0000
Vendor	0.0000	0.0000	0.0000	0.0000	0.0000	0.0000	0.0000	0.0000	0.0000	0.0000	0.0000	0.0000	0.0000	0.0000	0.0000	0.0000
Worker	0.0000	0.0000	0.0000	0.0000	0.0000	0.0000	0.0000	0.0000	0.0000	0.0000	0.0000	0.0000	0.0000	0.0000	0.0000	0.0000
Total	**0.0000**	**0.0000**	**0.0000**	**0.0000**	**0.0000**	**0.0000**	**0.0000**	**0.0000**	**0.0000**	**0.0000**	**0.0000**	**0.0000**	**0.0000**	**0.0000**	**0.0000**	**0.0000**

Mitigated Construction On-Site

	ROG	NOx	CO	SO2	Fugitive PM10	Exhaust PM10	PM10 Total	Fugitive PM2.5	Exhaust PM2.5	PM2.5 Total	Bio- CO2	NBio- CO2	Total CO2	CH4	N2O	CO2e
Category	tons/yr										MT/yr					
Off-Road	0.0101	0.0320	0.4605	9.9000e-004		9.2000e-004	9.2000e-004		9.2000e-004	9.2000e-004	0.0000	99.9641	99.9641	6.8600e-003	0.0000	100.1082
Total	**0.0101**	**0.0320**	**0.4605**	**9.9000e-004**		**9.2000e-004**	**9.2000e-004**		**9.2000e-004**	**9.2000e-004**	**0.0000**	**99.9641**	**99.9641**	**6.8600e-003**	**0.0000**	**100.1082**

3.4 Year 2 - 2021

Mitigated Construction Off-Site

	ROG	NOx	CO	SO2	Fugitive PM10	Exhaust PM10	PM10 Total	Fugitive PM2.5	Exhaust PM2.5	PM2.5 Total	Bio- CO2	NBio- CO2	Total CO2	CH4	N2O	CO2e
Category	tons/yr										MT/yr					
Hauling	0.0000	0.0000	0.0000	0.0000	0.0000	0.0000	0.0000	0.0000	0.0000	0.0000	0.0000	0.0000	0.0000	0.0000	0.0000	0.0000
Vendor	0.0000	0.0000	0.0000	0.0000	0.0000	0.0000	0.0000	0.0000	0.0000	0.0000	0.0000	0.0000	0.0000	0.0000	0.0000	0.0000
Worker	0.0000	0.0000	0.0000	0.0000	0.0000	0.0000	0.0000	0.0000	0.0000	0.0000	0.0000	0.0000	0.0000	0.0000	0.0000	0.0000
Total	**0.0000**	**0.0000**	**0.0000**	**0.0000**	**0.0000**	**0.0000**	**0.0000**	**0.0000**	**0.0000**	**0.0000**	**0.0000**	**0.0000**	**0.0000**	**0.0000**	**0.0000**	**0.0000**

3.5 Year 3 - 2022

Unmitigated Construction On-Site

	ROG	NOx	CO	SO2	Fugitive PM10	Exhaust PM10	PM10 Total	Fugitive PM2.5	Exhaust PM2.5	PM2.5 Total	Bio- CO2	NBio- CO2	Total CO2	CH4	N2O	CO2e
Category	tons/yr										MT/yr					
Off-Road	0.0706	0.6072	0.4335	1.9900e-003		0.0198	0.0198		0.0194	0.0194	0.0000	200.3380	200.3380	0.0134	0.0000	200.6183
Total	**0.0706**	**0.6072**	**0.4335**	**1.9900e-003**		**0.0198**	**0.0198**		**0.0194**	**0.0194**	**0.0000**	**200.3380**	**200.3380**	**0.0134**	**0.0000**	**200.6183**

3.5 Year 3 - 2022

Unmitigated Construction Off-Site

	ROG	NOx	CO	SO2	Fugitive PM10	Exhaust PM10	PM10 Total	Fugitive PM2.5	Exhaust PM2.5	PM2.5 Total	Bio- CO2	NBio- CO2	Total CO2	CH4	N2O	CO2e
Category	tons/yr										MT/yr					
Hauling	0.0000	0.0000	0.0000	0.0000	0.0000	0.0000	0.0000	0.0000	0.0000	0.0000	0.0000	0.0000	0.0000	0.0000	0.0000	0.0000
Vendor	0.0000	0.0000	0.0000	0.0000	0.0000	0.0000	0.0000	0.0000	0.0000	0.0000	0.0000	0.0000	0.0000	0.0000	0.0000	0.0000
Worker	0.0000	0.0000	0.0000	0.0000	0.0000	0.0000	0.0000	0.0000	0.0000	0.0000	0.0000	0.0000	0.0000	0.0000	0.0000	0.0000
Total	**0.0000**	**0.0000**	**0.0000**	**0.0000**	**0.0000**	**0.0000**	**0.0000**	**0.0000**	**0.0000**	**0.0000**	**0.0000**	**0.0000**	**0.0000**	**0.0000**	**0.0000**	**0.0000**

Mitigated Construction On-Site

	ROG	NOx	CO	SO2	Fugitive PM10	Exhaust PM10	PM10 Total	Fugitive PM2.5	Exhaust PM2.5	PM2.5 Total	Bio- CO2	NBio- CO2	Total CO2	CH4	N2O	CO2e
Category	tons/yr										MT/yr					
Off-Road	0.0204	0.0700	0.9226	1.9900e-003		2.0200e-003	2.0200e-003		2.0200e-003	2.0200e-003	0.0000	200.3378	200.3378	0.0134	0.0000	200.6181
Total	**0.0204**	**0.0700**	**0.9226**	**1.9900e-003**		**2.0200e-003**	**2.0200e-003**		**2.0200e-003**	**2.0200e-003**	**0.0000**	**200.3378**	**200.3378**	**0.0134**	**0.0000**	**200.6181**

3.5 Year 3 - 2022

Mitigated Construction Off-Site

	ROG	NOx	CO	SO2	Fugitive PM10	Exhaust PM10	PM10 Total	Fugitive PM2.5	Exhaust PM2.5	PM2.5 Total	Bio- CO2	NBio- CO2	Total CO2	CH4	N2O	CO2e
Category	tons/yr										MT/yr					
Hauling	0.0000	0.0000	0.0000	0.0000	0.0000	0.0000	0.0000	0.0000	0.0000	0.0000	0.0000	0.0000	0.0000	0.0000	0.0000	0.0000
Vendor	0.0000	0.0000	0.0000	0.0000	0.0000	0.0000	0.0000	0.0000	0.0000	0.0000	0.0000	0.0000	0.0000	0.0000	0.0000	0.0000
Worker	0.0000	0.0000	0.0000	0.0000	0.0000	0.0000	0.0000	0.0000	0.0000	0.0000	0.0000	0.0000	0.0000	0.0000	0.0000	0.0000
Total	**0.0000**	**0.0000**	**0.0000**	**0.0000**	**0.0000**	**0.0000**	**0.0000**	**0.0000**	**0.0000**	**0.0000**	**0.0000**	**0.0000**	**0.0000**	**0.0000**	**0.0000**	**0.0000**

3.6 Year 4 - 2023

Unmitigated Construction On-Site

	ROG	NOx	CO	SO2	Fugitive PM10	Exhaust PM10	PM10 Total	Fugitive PM2.5	Exhaust PM2.5	PM2.5 Total	Bio- CO2	NBio- CO2	Total CO2	CH4	N2O	CO2e
Category	tons/yr										MT/yr					
Off-Road	0.0673	0.5434	0.4296	1.9900e-003		0.0174	0.0174		0.0170	0.0170	0.0000	200.3484	200.3484	0.0130	0.0000	200.6223
Total	**0.0673**	**0.5434**	**0.4296**	**1.9900e-003**		**0.0174**	**0.0174**		**0.0170**	**0.0170**	**0.0000**	**200.3484**	**200.3484**	**0.0130**	**0.0000**	**200.6223**

3.6 Year 4 - 2023

Unmitigated Construction Off-Site

	ROG	NOx	CO	SO2	Fugitive PM10	Exhaust PM10	PM10 Total	Fugitive PM2.5	Exhaust PM2.5	PM2.5 Total	Bio- CO2	NBio- CO2	Total CO2	CH4	N2O	CO2e
Category	tons/yr										MT/yr					
Hauling	0.0000	0.0000	0.0000	0.0000	0.0000	0.0000	0.0000	0.0000	0.0000	0.0000	0.0000	0.0000	0.0000	0.0000	0.0000	0.0000
Vendor	0.0000	0.0000	0.0000	0.0000	0.0000	0.0000	0.0000	0.0000	0.0000	0.0000	0.0000	0.0000	0.0000	0.0000	0.0000	0.0000
Worker	0.0000	0.0000	0.0000	0.0000	0.0000	0.0000	0.0000	0.0000	0.0000	0.0000	0.0000	0.0000	0.0000	0.0000	0.0000	0.0000
Total	**0.0000**	**0.0000**	**0.0000**	**0.0000**	**0.0000**	**0.0000**	**0.0000**	**0.0000**	**0.0000**	**0.0000**	**0.0000**	**0.0000**	**0.0000**	**0.0000**	**0.0000**	**0.0000**

Mitigated Construction On-Site

	ROG	NOx	CO	SO2	Fugitive PM10	Exhaust PM10	PM10 Total	Fugitive PM2.5	Exhaust PM2.5	PM2.5 Total	Bio- CO2	NBio- CO2	Total CO2	CH4	N2O	CO2e
Category	tons/yr										MT/yr					
Off-Road	0.0207	0.0753	0.9228	1.9900e-003		2.2200e-003	2.2200e-003		2.2200e-003	2.2200e-003	0.0000	200.3482	200.3482	0.0130	0.0000	200.6220
Total	**0.0207**	**0.0753**	**0.9228**	**1.9900e-003**		**2.2200e-003**	**2.2200e-003**		**2.2200e-003**	**2.2200e-003**	**0.0000**	**200.3482**	**200.3482**	**0.0130**	**0.0000**	**200.6220**

3.6 Year 4 - 2023

Mitigated Construction Off-Site

	ROG	NOx	CO	SO2	Fugitive PM10	Exhaust PM10	PM10 Total	Fugitive PM2.5	Exhaust PM2.5	PM2.5 Total	Bio- CO2	NBio- CO2	Total CO2	CH4	N2O	CO2e
Category	tons/yr										MT/yr					
Hauling	0.0000	0.0000	0.0000	0.0000	0.0000	0.0000	0.0000	0.0000	0.0000	0.0000	0.0000	0.0000	0.0000	0.0000	0.0000	0.0000
Vendor	0.0000	0.0000	0.0000	0.0000	0.0000	0.0000	0.0000	0.0000	0.0000	0.0000	0.0000	0.0000	0.0000	0.0000	0.0000	0.0000
Worker	0.0000	0.0000	0.0000	0.0000	0.0000	0.0000	0.0000	0.0000	0.0000	0.0000	0.0000	0.0000	0.0000	0.0000	0.0000	0.0000
Total	**0.0000**	**0.0000**	**0.0000**	**0.0000**	**0.0000**	**0.0000**	**0.0000**	**0.0000**	**0.0000**	**0.0000**	**0.0000**	**0.0000**	**0.0000**	**0.0000**	**0.0000**	**0.0000**

3.7 Year 5 - 2024

Unmitigated Construction On-Site

	ROG	NOx	CO	SO2	Fugitive PM10	Exhaust PM10	PM10 Total	Fugitive PM2.5	Exhaust PM2.5	PM2.5 Total	Bio- CO2	NBio- CO2	Total CO2	CH4	N2O	CO2e
Category	tons/yr										MT/yr					
Off-Road	1.9076	14.4198	12.7400	0.0597		0.4539	0.4539		0.4440	0.4440	0.0000	6,011.3004	6,011.3004	0.3688	0.0000	6,019.0455
Total	**1.9076**	**14.4198**	**12.7400**	**0.0597**		**0.4539**	**0.4539**		**0.4440**	**0.4440**	**0.0000**	**6,011.3004**	**6,011.3004**	**0.3688**	**0.0000**	**6,019.0455**

3.7 Year 5 - 2024

Unmitigated Construction Off-Site

	ROG	NOx	CO	SO2	Fugitive PM10	Exhaust PM10	PM10 Total	Fugitive PM2.5	Exhaust PM2.5	PM2.5 Total	Bio- CO2	NBio- CO2	Total CO2	CH4	N2O	CO2e
Category	tons/yr										MT/yr					
Hauling	0.0000	0.0000	0.0000	0.0000	0.0000	0.0000	0.0000	0.0000	0.0000	0.0000	0.0000	0.0000	0.0000	0.0000	0.0000	0.0000
Vendor	0.0000	0.0000	0.0000	0.0000	0.0000	0.0000	0.0000	0.0000	0.0000	0.0000	0.0000	0.0000	0.0000	0.0000	0.0000	0.0000
Worker	0.0000	0.0000	0.0000	0.0000	0.0000	0.0000	0.0000	0.0000	0.0000	0.0000	0.0000	0.0000	0.0000	0.0000	0.0000	0.0000
Total	**0.0000**	**0.0000**	**0.0000**	**0.0000**	**0.0000**	**0.0000**	**0.0000**	**0.0000**	**0.0000**	**0.0000**	**0.0000**	**0.0000**	**0.0000**	**0.0000**	**0.0000**	**0.0000**

Mitigated Construction On-Site

	ROG	NOx	CO	SO2	Fugitive PM10	Exhaust PM10	PM10 Total	Fugitive PM2.5	Exhaust PM2.5	PM2.5 Total	Bio- CO2	NBio- CO2	Total CO2	CH4	N2O	CO2e
Category	tons/yr										MT/yr					
Off-Road	0.6267	2.3882	27.6553	0.0597		0.0712	0.0712		0.0712	0.0712	0.0000	6,011.2933	6,011.2933	0.3688	0.0000	6,019.0383
Total	**0.6267**	**2.3882**	**27.6553**	**0.0597**		**0.0712**	**0.0712**		**0.0712**	**0.0712**	**0.0000**	**6,011.2933**	**6,011.2933**	**0.3688**	**0.0000**	**6,019.0383**

3.7 Year 5 - 2024

Mitigated Construction Off-Site

	ROG	NOx	CO	SO2	Fugitive PM10	Exhaust PM10	PM10 Total	Fugitive PM2.5	Exhaust PM2.5	PM2.5 Total	Bio- CO2	NBio- CO2	Total CO2	CH4	N2O	CO2e
Category	tons/yr										MT/yr					
Hauling	0.0000	0.0000	0.0000	0.0000	0.0000	0.0000	0.0000	0.0000	0.0000	0.0000	0.0000	0.0000	0.0000	0.0000	0.0000	0.0000
Vendor	0.0000	0.0000	0.0000	0.0000	0.0000	0.0000	0.0000	0.0000	0.0000	0.0000	0.0000	0.0000	0.0000	0.0000	0.0000	0.0000
Worker	0.0000	0.0000	0.0000	0.0000	0.0000	0.0000	0.0000	0.0000	0.0000	0.0000	0.0000	0.0000	0.0000	0.0000	0.0000	0.0000
Total	**0.0000**	**0.0000**	**0.0000**	**0.0000**	**0.0000**	**0.0000**	**0.0000**	**0.0000**	**0.0000**	**0.0000**	**0.0000**	**0.0000**	**0.0000**	**0.0000**	**0.0000**	**0.0000**

3.8 Year 6 - 2025

Unmitigated Construction On-Site

	ROG	NOx	CO	SO2	Fugitive PM10	Exhaust PM10	PM10 Total	Fugitive PM2.5	Exhaust PM2.5	PM2.5 Total	Bio- CO2	NBio- CO2	Total CO2	CH4	N2O	CO2e
Category	tons/yr										MT/yr					
Off-Road	0.6850	4.8032	4.7672	0.0224		0.1478	0.1478		0.1444	0.1444	0.0000	2,260.7670	2,260.7670	0.1386	0.0000	2,263.6776
Total	**0.6850**	**4.8032**	**4.7672**	**0.0224**		**0.1478**	**0.1478**		**0.1444**	**0.1444**	**0.0000**	**2,260.7670**	**2,260.7670**	**0.1386**	**0.0000**	**2,263.6776**

3.8 Year 6 - 2025

Unmitigated Construction Off-Site

	ROG	NOx	CO	SO2	Fugitive PM10	Exhaust PM10	PM10 Total	Fugitive PM2.5	Exhaust PM2.5	PM2.5 Total	Bio- CO2	NBio- CO2	Total CO2	CH4	N2O	CO2e
Category	tons/yr										MT/yr					
Hauling	0.0000	0.0000	0.0000	0.0000	0.0000	0.0000	0.0000	0.0000	0.0000	0.0000	0.0000	0.0000	0.0000	0.0000	0.0000	0.0000
Vendor	0.0000	0.0000	0.0000	0.0000	0.0000	0.0000	0.0000	0.0000	0.0000	0.0000	0.0000	0.0000	0.0000	0.0000	0.0000	0.0000
Worker	0.0000	0.0000	0.0000	0.0000	0.0000	0.0000	0.0000	0.0000	0.0000	0.0000	0.0000	0.0000	0.0000	0.0000	0.0000	0.0000
Total	**0.0000**	**0.0000**	**0.0000**	**0.0000**	**0.0000**	**0.0000**	**0.0000**	**0.0000**	**0.0000**	**0.0000**	**0.0000**	**0.0000**	**0.0000**	**0.0000**	**0.0000**	**0.0000**

Mitigated Construction On-Site

	ROG	NOx	CO	SO2	Fugitive PM10	Exhaust PM10	PM10 Total	Fugitive PM2.5	Exhaust PM2.5	PM2.5 Total	Bio- CO2	NBio- CO2	Total CO2	CH4	N2O	CO2e
Category	tons/yr										MT/yr					
Off-Road	0.2384	0.9518	10.4023	0.0224		0.0287	0.0287		0.0287	0.0287	0.0000	2,260.7643	2,260.7643	0.1386	0.0000	2,263.6749
Total	**0.2384**	**0.9518**	**10.4023**	**0.0224**		**0.0287**	**0.0287**		**0.0287**	**0.0287**	**0.0000**	**2,260.7643**	**2,260.7643**	**0.1386**	**0.0000**	**2,263.6749**

3.8 Year 6 - 2025

Mitigated Construction Off-Site

	ROG	NOx	CO	SO2	Fugitive PM10	Exhaust PM10	PM10 Total	Fugitive PM2.5	Exhaust PM2.5	PM2.5 Total	Bio- CO2	NBio- CO2	Total CO2	CH4	N2O	CO2e
Category	tons/yr										MT/yr					
Hauling	0.0000	0.0000	0.0000	0.0000	0.0000	0.0000	0.0000	0.0000	0.0000	0.0000	0.0000	0.0000	0.0000	0.0000	0.0000	0.0000
Vendor	0.0000	0.0000	0.0000	0.0000	0.0000	0.0000	0.0000	0.0000	0.0000	0.0000	0.0000	0.0000	0.0000	0.0000	0.0000	0.0000
Worker	0.0000	0.0000	0.0000	0.0000	0.0000	0.0000	0.0000	0.0000	0.0000	0.0000	0.0000	0.0000	0.0000	0.0000	0.0000	0.0000
Total	**0.0000**	**0.0000**	**0.0000**	**0.0000**	**0.0000**	**0.0000**	**0.0000**	**0.0000**	**0.0000**	**0.0000**	**0.0000**	**0.0000**	**0.0000**	**0.0000**	**0.0000**	**0.0000**

3.9 Year 7 - 2026

Unmitigated Construction On-Site

	ROG	NOx	CO	SO2	Fugitive PM10	Exhaust PM10	PM10 Total	Fugitive PM2.5	Exhaust PM2.5	PM2.5 Total	Bio- CO2	NBio- CO2	Total CO2	CH4	N2O	CO2e
Category	tons/yr										MT/yr					
Off-Road	0.4020	2.8204	2.7977	0.0132		0.0869	0.0869		0.0849	0.0849	0.0000	1,325.3967	1,325.3967	0.0818	0.0000	1,327.1151
Total	**0.4020**	**2.8204**	**2.7977**	**0.0132**		**0.0869**	**0.0869**		**0.0849**	**0.0849**	**0.0000**	**1,325.3967**	**1,325.3967**	**0.0818**	**0.0000**	**1,327.1151**

3.9 Year 7 - 2026

Unmitigated Construction Off-Site

	ROG	NOx	CO	SO2	Fugitive PM10	Exhaust PM10	PM10 Total	Fugitive PM2.5	Exhaust PM2.5	PM2.5 Total	Bio- CO2	NBio- CO2	Total CO2	CH4	N2O	CO2e
Category	tons/yr										MT/yr					
Hauling	0.0000	0.0000	0.0000	0.0000	0.0000	0.0000	0.0000	0.0000	0.0000	0.0000	0.0000	0.0000	0.0000	0.0000	0.0000	0.0000
Vendor	0.0000	0.0000	0.0000	0.0000	0.0000	0.0000	0.0000	0.0000	0.0000	0.0000	0.0000	0.0000	0.0000	0.0000	0.0000	0.0000
Worker	0.0000	0.0000	0.0000	0.0000	0.0000	0.0000	0.0000	0.0000	0.0000	0.0000	0.0000	0.0000	0.0000	0.0000	0.0000	0.0000
Total	**0.0000**	**0.0000**	**0.0000**	**0.0000**	**0.0000**	**0.0000**	**0.0000**	**0.0000**	**0.0000**	**0.0000**	**0.0000**	**0.0000**	**0.0000**	**0.0000**	**0.0000**	**0.0000**

Mitigated Construction On-Site

	ROG	NOx	CO	SO2	Fugitive PM10	Exhaust PM10	PM10 Total	Fugitive PM2.5	Exhaust PM2.5	PM2.5 Total	Bio- CO2	NBio- CO2	Total CO2	CH4	N2O	CO2e
Category	tons/yr										MT/yr					
Off-Road	0.1398	0.5588	6.0997	0.0132		0.0168	0.0168		0.0168	0.0168	0.0000	1,325.3951	1,325.3951	0.0818	0.0000	1,327.1136
Total	**0.1398**	**0.5588**	**6.0997**	**0.0132**		**0.0168**	**0.0168**		**0.0168**	**0.0168**	**0.0000**	**1,325.3951**	**1,325.3951**	**0.0818**	**0.0000**	**1,327.1136**

3.9 Year 7 - 2026

Mitigated Construction Off-Site

	ROG	NOx	CO	SO2	Fugitive PM10	Exhaust PM10	PM10 Total	Fugitive PM2.5	Exhaust PM2.5	PM2.5 Total	Bio- CO2	NBio- CO2	Total CO2	CH4	N2O	CO2e
Category	tons/yr										MT/yr					
Hauling	0.0000	0.0000	0.0000	0.0000	0.0000	0.0000	0.0000	0.0000	0.0000	0.0000	0.0000	0.0000	0.0000	0.0000	0.0000	0.0000
Vendor	0.0000	0.0000	0.0000	0.0000	0.0000	0.0000	0.0000	0.0000	0.0000	0.0000	0.0000	0.0000	0.0000	0.0000	0.0000	0.0000
Worker	0.0000	0.0000	0.0000	0.0000	0.0000	0.0000	0.0000	0.0000	0.0000	0.0000	0.0000	0.0000	0.0000	0.0000	0.0000	0.0000
Total	**0.0000**	**0.0000**	**0.0000**	**0.0000**	**0.0000**	**0.0000**	**0.0000**	**0.0000**	**0.0000**	**0.0000**	**0.0000**	**0.0000**	**0.0000**	**0.0000**	**0.0000**	**0.0000**

3.10 Year 8 - 2027

Unmitigated Construction On-Site

	ROG	NOx	CO	SO2	Fugitive PM10	Exhaust PM10	PM10 Total	Fugitive PM2.5	Exhaust PM2.5	PM2.5 Total	Bio- CO2	NBio- CO2	Total CO2	CH4	N2O	CO2e
Category	tons/yr										MT/yr					
Off-Road	0.1531	1.0741	1.0630	4.9800e-003		0.0334	0.0334		0.0326	0.0326	0.0000	500.7147	500.7147	0.0319	0.0000	501.3839
Total	**0.1531**	**1.0741**	**1.0630**	**4.9800e-003**		**0.0334**	**0.0334**		**0.0326**	**0.0326**	**0.0000**	**500.7147**	**500.7147**	**0.0319**	**0.0000**	**501.3839**

3.10 Year 8 - 2027

Unmitigated Construction Off-Site

	ROG	NOx	CO	SO2	Fugitive PM10	Exhaust PM10	PM10 Total	Fugitive PM2.5	Exhaust PM2.5	PM2.5 Total	Bio- CO2	NBio- CO2	Total CO2	CH4	N2O	CO2e
Category	tons/yr										MT/yr					
Hauling	0.0000	0.0000	0.0000	0.0000	0.0000	0.0000	0.0000	0.0000	0.0000	0.0000	0.0000	0.0000	0.0000	0.0000	0.0000	0.0000
Vendor	0.0000	0.0000	0.0000	0.0000	0.0000	0.0000	0.0000	0.0000	0.0000	0.0000	0.0000	0.0000	0.0000	0.0000	0.0000	0.0000
Worker	0.0000	0.0000	0.0000	0.0000	0.0000	0.0000	0.0000	0.0000	0.0000	0.0000	0.0000	0.0000	0.0000	0.0000	0.0000	0.0000
Total	**0.0000**	**0.0000**	**0.0000**	**0.0000**	**0.0000**	**0.0000**	**0.0000**	**0.0000**	**0.0000**	**0.0000**	**0.0000**	**0.0000**	**0.0000**	**0.0000**	**0.0000**	**0.0000**

Mitigated Construction On-Site

	ROG	NOx	CO	SO2	Fugitive PM10	Exhaust PM10	PM10 Total	Fugitive PM2.5	Exhaust PM2.5	PM2.5 Total	Bio- CO2	NBio- CO2	Total CO2	CH4	N2O	CO2e
Category	tons/yr										MT/yr					
Off-Road	0.0530	0.2125	2.3067	4.9800e-003		6.3800e-003	6.3800e-003		6.3800e-003	6.3800e-003	0.0000	500.7141	500.7141	0.0319	0.0000	501.3833
Total	**0.0530**	**0.2125**	**2.3067**	**4.9800e-003**		**6.3800e-003**	**6.3800e-003**		**6.3800e-003**	**6.3800e-003**	**0.0000**	**500.7141**	**500.7141**	**0.0319**	**0.0000**	**501.3833**

3.10 Year 8 - 2027

Mitigated Construction Off-Site

	ROG	NOx	CO	SO2	Fugitive PM10	Exhaust PM10	PM10 Total	Fugitive PM2.5	Exhaust PM2.5	PM2.5 Total	Bio- CO2	NBio- CO2	Total CO2	CH4	N2O	CO2e
Category	tons/yr										MT/yr					
Hauling	0.0000	0.0000	0.0000	0.0000	0.0000	0.0000	0.0000	0.0000	0.0000	0.0000	0.0000	0.0000	0.0000	0.0000	0.0000	0.0000
Vendor	0.0000	0.0000	0.0000	0.0000	0.0000	0.0000	0.0000	0.0000	0.0000	0.0000	0.0000	0.0000	0.0000	0.0000	0.0000	0.0000
Worker	0.0000	0.0000	0.0000	0.0000	0.0000	0.0000	0.0000	0.0000	0.0000	0.0000	0.0000	0.0000	0.0000	0.0000	0.0000	0.0000
Total	**0.0000**	**0.0000**	**0.0000**	**0.0000**	**0.0000**	**0.0000**	**0.0000**	**0.0000**	**0.0000**	**0.0000**	**0.0000**	**0.0000**	**0.0000**	**0.0000**	**0.0000**	**0.0000**

3.11 Year 9 - 2028

Unmitigated Construction On-Site

	ROG	NOx	CO	SO2	Fugitive PM10	Exhaust PM10	PM10 Total	Fugitive PM2.5	Exhaust PM2.5	PM2.5 Total	Bio- CO2	NBio- CO2	Total CO2	CH4	N2O	CO2e
Category	tons/yr										MT/yr					
Off-Road	0.1224	0.8592	0.8504	3.9800e-003		0.0267	0.0267		0.0260	0.0260	0.0000	400.7099	400.7099	0.0255	0.0000	401.2446
Total	**0.1224**	**0.8592**	**0.8504**	**3.9800e-003**		**0.0267**	**0.0267**		**0.0260**	**0.0260**	**0.0000**	**400.7099**	**400.7099**	**0.0255**	**0.0000**	**401.2446**

3.11 Year 9 - 2028

Unmitigated Construction Off-Site

	ROG	NOx	CO	SO2	Fugitive PM10	Exhaust PM10	PM10 Total	Fugitive PM2.5	Exhaust PM2.5	PM2.5 Total	Bio- CO2	NBio- CO2	Total CO2	CH4	N2O	CO2e
Category	tons/yr										MT/yr					
Hauling	0.0000	0.0000	0.0000	0.0000	0.0000	0.0000	0.0000	0.0000	0.0000	0.0000	0.0000	0.0000	0.0000	0.0000	0.0000	0.0000
Vendor	0.0000	0.0000	0.0000	0.0000	0.0000	0.0000	0.0000	0.0000	0.0000	0.0000	0.0000	0.0000	0.0000	0.0000	0.0000	0.0000
Worker	0.0000	0.0000	0.0000	0.0000	0.0000	0.0000	0.0000	0.0000	0.0000	0.0000	0.0000	0.0000	0.0000	0.0000	0.0000	0.0000
Total	**0.0000**	**0.0000**	**0.0000**	**0.0000**	**0.0000**	**0.0000**	**0.0000**	**0.0000**	**0.0000**	**0.0000**	**0.0000**	**0.0000**	**0.0000**	**0.0000**	**0.0000**	**0.0000**

Mitigated Construction On-Site

	ROG	NOx	CO	SO2	Fugitive PM10	Exhaust PM10	PM10 Total	Fugitive PM2.5	Exhaust PM2.5	PM2.5 Total	Bio- CO2	NBio- CO2	Total CO2	CH4	N2O	CO2e
Category	tons/yr										MT/yr					
Off-Road	0.0424	0.1700	1.8459	3.9800e-003		5.1100e-003	5.1100e-003		5.1100e-003	5.1100e-003	0.0000	400.7094	400.7094	0.0255	0.0000	401.2441
Total	**0.0424**	**0.1700**	**1.8459**	**3.9800e-003**		**5.1100e-003**	**5.1100e-003**		**5.1100e-003**	**5.1100e-003**	**0.0000**	**400.7094**	**400.7094**	**0.0255**	**0.0000**	**401.2441**

3.11 Year 9 - 2028

Mitigated Construction Off-Site

	ROG	NOx	CO	SO2	Fugitive PM10	Exhaust PM10	PM10 Total	Fugitive PM2.5	Exhaust PM2.5	PM2.5 Total	Bio- CO2	NBio- CO2	Total CO2	CH4	N2O	CO2e
Category	tons/yr										MT/yr					
Hauling	0.0000	0.0000	0.0000	0.0000	0.0000	0.0000	0.0000	0.0000	0.0000	0.0000	0.0000	0.0000	0.0000	0.0000	0.0000	0.0000
Vendor	0.0000	0.0000	0.0000	0.0000	0.0000	0.0000	0.0000	0.0000	0.0000	0.0000	0.0000	0.0000	0.0000	0.0000	0.0000	0.0000
Worker	0.0000	0.0000	0.0000	0.0000	0.0000	0.0000	0.0000	0.0000	0.0000	0.0000	0.0000	0.0000	0.0000	0.0000	0.0000	0.0000
Total	**0.0000**	**0.0000**	**0.0000**	**0.0000**	**0.0000**	**0.0000**	**0.0000**	**0.0000**	**0.0000**	**0.0000**	**0.0000**	**0.0000**	**0.0000**	**0.0000**	**0.0000**	**0.0000**

3.12 Year 10 - 2029

Unmitigated Construction On-Site

	ROG	NOx	CO	SO2	Fugitive PM10	Exhaust PM10	PM10 Total	Fugitive PM2.5	Exhaust PM2.5	PM2.5 Total	Bio- CO2	NBio- CO2	Total CO2	CH4	N2O	CO2e
Category	tons/yr										MT/yr					
Off-Road	0.4061	2.8491	2.8249	0.0133		0.0879	0.0879		0.0858	0.0858	0.0000	1,337.4724	1,337.4724	0.0829	0.0000	1,339.2134
Total	**0.4061**	**2.8491**	**2.8249**	**0.0133**		**0.0879**	**0.0879**		**0.0858**	**0.0858**	**0.0000**	**1,337.4724**	**1,337.4724**	**0.0829**	**0.0000**	**1,339.2134**

3.12 Year 10 - 2029

Unmitigated Construction Off-Site

	ROG	NOx	CO	SO2	Fugitive PM10	Exhaust PM10	PM10 Total	Fugitive PM2.5	Exhaust PM2.5	PM2.5 Total	Bio- CO2	NBio- CO2	Total CO2	CH4	N2O	CO2e
Category	tons/yr										MT/yr					
Hauling	0.0000	0.0000	0.0000	0.0000	0.0000	0.0000	0.0000	0.0000	0.0000	0.0000	0.0000	0.0000	0.0000	0.0000	0.0000	0.0000
Vendor	0.0000	0.0000	0.0000	0.0000	0.0000	0.0000	0.0000	0.0000	0.0000	0.0000	0.0000	0.0000	0.0000	0.0000	0.0000	0.0000
Worker	0.0000	0.0000	0.0000	0.0000	0.0000	0.0000	0.0000	0.0000	0.0000	0.0000	0.0000	0.0000	0.0000	0.0000	0.0000	0.0000
Total	**0.0000**	**0.0000**	**0.0000**	**0.0000**	**0.0000**	**0.0000**	**0.0000**	**0.0000**	**0.0000**	**0.0000**	**0.0000**	**0.0000**	**0.0000**	**0.0000**	**0.0000**	**0.0000**

Mitigated Construction On-Site

	ROG	NOx	CO	SO2	Fugitive PM10	Exhaust PM10	PM10 Total	Fugitive PM2.5	Exhaust PM2.5	PM2.5 Total	Bio- CO2	NBio- CO2	Total CO2	CH4	N2O	CO2e
Category	tons/yr										MT/yr					
Off-Road	0.1412	0.5642	6.1558	0.0133		0.0170	0.0170		0.0170	0.0170	0.0000	1,337.4708	1,337.4708	0.0829	0.0000	1,339.2118
Total	**0.1412**	**0.5642**	**6.1558**	**0.0133**		**0.0170**	**0.0170**		**0.0170**	**0.0170**	**0.0000**	**1,337.4708**	**1,337.4708**	**0.0829**	**0.0000**	**1,339.2118**

3.12 Year 10 - 2029

Mitigated Construction Off-Site

	ROG	NOx	CO	SO2	Fugitive PM10	Exhaust PM10	PM10 Total	Fugitive PM2.5	Exhaust PM2.5	PM2.5 Total	Bio- CO2	NBio- CO2	Total CO2	CH4	N2O	CO2e
Category	tons/yr										MT/yr					
Hauling	0.0000	0.0000	0.0000	0.0000	0.0000	0.0000	0.0000	0.0000	0.0000	0.0000	0.0000	0.0000	0.0000	0.0000	0.0000	0.0000
Vendor	0.0000	0.0000	0.0000	0.0000	0.0000	0.0000	0.0000	0.0000	0.0000	0.0000	0.0000	0.0000	0.0000	0.0000	0.0000	0.0000
Worker	0.0000	0.0000	0.0000	0.0000	0.0000	0.0000	0.0000	0.0000	0.0000	0.0000	0.0000	0.0000	0.0000	0.0000	0.0000	0.0000
Total	**0.0000**	**0.0000**	**0.0000**	**0.0000**	**0.0000**	**0.0000**	**0.0000**	**0.0000**	**0.0000**	**0.0000**	**0.0000**	**0.0000**	**0.0000**	**0.0000**	**0.0000**	**0.0000**

3.13 Year 11 - 2030

Unmitigated Construction On-Site

	ROG	NOx	CO	SO2	Fugitive PM10	Exhaust PM10	PM10 Total	Fugitive PM2.5	Exhaust PM2.5	PM2.5 Total	Bio- CO2	NBio- CO2	Total CO2	CH4	N2O	CO2e
Category	tons/yr										MT/yr					
Off-Road	0.5746	2.2067	4.5841	0.0228		0.0686	0.0686		0.0686	0.0686	0.0000	2,341.4054	2,341.4054	0.0439	0.0000	2,342.3276
Total	**0.5746**	**2.2067**	**4.5841**	**0.0228**		**0.0686**	**0.0686**		**0.0686**	**0.0686**	**0.0000**	**2,341.4054**	**2,341.4054**	**0.0439**	**0.0000**	**2,342.3276**

3.13 Year 11 - 2030

Unmitigated Construction Off-Site

	ROG	NOx	CO	SO2	Fugitive PM10	Exhaust PM10	PM10 Total	Fugitive PM2.5	Exhaust PM2.5	PM2.5 Total	Bio- CO2	NBio- CO2	Total CO2	CH4	N2O	CO2e
Category	tons/yr										MT/yr					
Hauling	0.0000	0.0000	0.0000	0.0000	0.0000	0.0000	0.0000	0.0000	0.0000	0.0000	0.0000	0.0000	0.0000	0.0000	0.0000	0.0000
Vendor	0.0000	0.0000	0.0000	0.0000	0.0000	0.0000	0.0000	0.0000	0.0000	0.0000	0.0000	0.0000	0.0000	0.0000	0.0000	0.0000
Worker	0.0000	0.0000	0.0000	0.0000	0.0000	0.0000	0.0000	0.0000	0.0000	0.0000	0.0000	0.0000	0.0000	0.0000	0.0000	0.0000
Total	**0.0000**	**0.0000**	**0.0000**	**0.0000**	**0.0000**	**0.0000**	**0.0000**	**0.0000**	**0.0000**	**0.0000**	**0.0000**	**0.0000**	**0.0000**	**0.0000**	**0.0000**	**0.0000**

Mitigated Construction On-Site

	ROG	NOx	CO	SO2	Fugitive PM10	Exhaust PM10	PM10 Total	Fugitive PM2.5	Exhaust PM2.5	PM2.5 Total	Bio- CO2	NBio- CO2	Total CO2	CH4	N2O	CO2e
Category	tons/yr										MT/yr					
Off-Road	0.2511	1.1488	10.5181	0.0228		0.0336	0.0336		0.0336	0.0336	0.0000	2,341.4026	2,341.4026	0.0439	0.0000	2,342.3248
Total	**0.2511**	**1.1488**	**10.5181**	**0.0228**		**0.0336**	**0.0336**		**0.0336**	**0.0336**	**0.0000**	**2,341.4026**	**2,341.4026**	**0.0439**	**0.0000**	**2,342.3248**

3.13 Year 11 - 2030

Mitigated Construction Off-Site

	ROG	NOx	CO	SO2	Fugitive PM10	Exhaust PM10	PM10 Total	Fugitive PM2.5	Exhaust PM2.5	PM2.5 Total	Bio- CO2	NBio- CO2	Total CO2	CH4	N2O	CO2e
Category	tons/yr										MT/yr					
Hauling	0.0000	0.0000	0.0000	0.0000	0.0000	0.0000	0.0000	0.0000	0.0000	0.0000	0.0000	0.0000	0.0000	0.0000	0.0000	0.0000
Vendor	0.0000	0.0000	0.0000	0.0000	0.0000	0.0000	0.0000	0.0000	0.0000	0.0000	0.0000	0.0000	0.0000	0.0000	0.0000	0.0000
Worker	0.0000	0.0000	0.0000	0.0000	0.0000	0.0000	0.0000	0.0000	0.0000	0.0000	0.0000	0.0000	0.0000	0.0000	0.0000	0.0000
Total	**0.0000**	**0.0000**	**0.0000**	**0.0000**	**0.0000**	**0.0000**	**0.0000**	**0.0000**	**0.0000**	**0.0000**	**0.0000**	**0.0000**	**0.0000**	**0.0000**	**0.0000**	**0.0000**

3.14 Year 12 - 2031

Unmitigated Construction On-Site

	ROG	NOx	CO	SO2	Fugitive PM10	Exhaust PM10	PM10 Total	Fugitive PM2.5	Exhaust PM2.5	PM2.5 Total	Bio- CO2	NBio- CO2	Total CO2	CH4	N2O	CO2e
Category	tons/yr										MT/yr					
Off-Road	0.4344	1.6665	3.4620	0.0172		0.0518	0.0518		0.0518	0.0518	0.0000	1,768.7383	1,768.7383	0.0332	0.0000	1,769.4355
Total	**0.4344**	**1.6665**	**3.4620**	**0.0172**		**0.0518**	**0.0518**		**0.0518**	**0.0518**	**0.0000**	**1,768.7383**	**1,768.7383**	**0.0332**	**0.0000**	**1,769.4355**

3.14 Year 12 - 2031

Unmitigated Construction Off-Site

	ROG	NOx	CO	SO2	Fugitive PM10	Exhaust PM10	PM10 Total	Fugitive PM2.5	Exhaust PM2.5	PM2.5 Total	Bio- CO2	NBio- CO2	Total CO2	CH4	N2O	CO2e
Category	tons/yr										MT/yr					
Hauling	0.0000	0.0000	0.0000	0.0000	0.0000	0.0000	0.0000	0.0000	0.0000	0.0000	0.0000	0.0000	0.0000	0.0000	0.0000	0.0000
Vendor	0.0000	0.0000	0.0000	0.0000	0.0000	0.0000	0.0000	0.0000	0.0000	0.0000	0.0000	0.0000	0.0000	0.0000	0.0000	0.0000
Worker	0.0000	0.0000	0.0000	0.0000	0.0000	0.0000	0.0000	0.0000	0.0000	0.0000	0.0000	0.0000	0.0000	0.0000	0.0000	0.0000
Total	**0.0000**	**0.0000**	**0.0000**	**0.0000**	**0.0000**	**0.0000**	**0.0000**	**0.0000**	**0.0000**	**0.0000**	**0.0000**	**0.0000**	**0.0000**	**0.0000**	**0.0000**	**0.0000**

Mitigated Construction On-Site

	ROG	NOx	CO	SO2	Fugitive PM10	Exhaust PM10	PM10 Total	Fugitive PM2.5	Exhaust PM2.5	PM2.5 Total	Bio- CO2	NBio- CO2	Total CO2	CH4	N2O	CO2e
Category	tons/yr										MT/yr					
Off-Road	0.1897	0.8684	7.9439	0.0172		0.0254	0.0254		0.0254	0.0254	0.0000	1,768.7362	1,768.7362	0.0332	0.0000	1,769.4334
Total	**0.1897**	**0.8684**	**7.9439**	**0.0172**		**0.0254**	**0.0254**		**0.0254**	**0.0254**	**0.0000**	**1,768.7362**	**1,768.7362**	**0.0332**	**0.0000**	**1,769.4334**

3.14 Year 12 - 2031

Mitigated Construction Off-Site

	ROG	NOx	CO	SO2	Fugitive PM10	Exhaust PM10	PM10 Total	Fugitive PM2.5	Exhaust PM2.5	PM2.5 Total	Bio- CO2	NBio- CO2	Total CO2	CH4	N2O	CO2e
Category	tons/yr										MT/yr					
Hauling	0.0000	0.0000	0.0000	0.0000	0.0000	0.0000	0.0000	0.0000	0.0000	0.0000	0.0000	0.0000	0.0000	0.0000	0.0000	0.0000
Vendor	0.0000	0.0000	0.0000	0.0000	0.0000	0.0000	0.0000	0.0000	0.0000	0.0000	0.0000	0.0000	0.0000	0.0000	0.0000	0.0000
Worker	0.0000	0.0000	0.0000	0.0000	0.0000	0.0000	0.0000	0.0000	0.0000	0.0000	0.0000	0.0000	0.0000	0.0000	0.0000	0.0000
Total	**0.0000**	**0.0000**	**0.0000**	**0.0000**	**0.0000**	**0.0000**	**0.0000**	**0.0000**	**0.0000**	**0.0000**	**0.0000**	**0.0000**	**0.0000**	**0.0000**	**0.0000**	**0.0000**

3.15 Year 13 - 2032

Unmitigated Construction On-Site

	ROG	NOx	CO	SO2	Fugitive PM10	Exhaust PM10	PM10 Total	Fugitive PM2.5	Exhaust PM2.5	PM2.5 Total	Bio- CO2	NBio- CO2	Total CO2	CH4	N2O	CO2e
Category	tons/yr										MT/yr					
Off-Road	0.3620	1.3896	2.8865	0.0143		0.0432	0.0432		0.0432	0.0432	0.0000	1,473.9477	1,473.9477	0.0277	0.0000	1,474.5287
Total	**0.3620**	**1.3896**	**2.8865**	**0.0143**		**0.0432**	**0.0432**		**0.0432**	**0.0432**	**0.0000**	**1,473.9477**	**1,473.9477**	**0.0277**	**0.0000**	**1,474.5287**

3.15 Year 13 - 2032

Unmitigated Construction Off-Site

	ROG	NOx	CO	SO2	Fugitive PM10	Exhaust PM10	PM10 Total	Fugitive PM2.5	Exhaust PM2.5	PM2.5 Total	Bio- CO2	NBio- CO2	Total CO2	CH4	N2O	CO2e
Category	tons/yr										MT/yr					
Hauling	0.0000	0.0000	0.0000	0.0000	0.0000	0.0000	0.0000	0.0000	0.0000	0.0000	0.0000	0.0000	0.0000	0.0000	0.0000	0.0000
Vendor	0.0000	0.0000	0.0000	0.0000	0.0000	0.0000	0.0000	0.0000	0.0000	0.0000	0.0000	0.0000	0.0000	0.0000	0.0000	0.0000
Worker	0.0000	0.0000	0.0000	0.0000	0.0000	0.0000	0.0000	0.0000	0.0000	0.0000	0.0000	0.0000	0.0000	0.0000	0.0000	0.0000
Total	**0.0000**	**0.0000**	**0.0000**	**0.0000**	**0.0000**	**0.0000**	**0.0000**	**0.0000**	**0.0000**	**0.0000**	**0.0000**	**0.0000**	**0.0000**	**0.0000**	**0.0000**	**0.0000**

Mitigated Construction On-Site

	ROG	NOx	CO	SO2	Fugitive PM10	Exhaust PM10	PM10 Total	Fugitive PM2.5	Exhaust PM2.5	PM2.5 Total	Bio- CO2	NBio- CO2	Total CO2	CH4	N2O	CO2e
Category	tons/yr										MT/yr					
Off-Road	0.1581	0.7239	6.6208	0.0143		0.0212	0.0212		0.0212	0.0212	0.0000	1,473.9459	1,473.9459	0.0277	0.0000	1,474.5270
Total	**0.1581**	**0.7239**	**6.6208**	**0.0143**		**0.0212**	**0.0212**		**0.0212**	**0.0212**	**0.0000**	**1,473.9459**	**1,473.9459**	**0.0277**	**0.0000**	**1,474.5270**

3.15 Year 13 - 2032

Mitigated Construction Off-Site

	ROG	NOx	CO	SO2	Fugitive PM10	Exhaust PM10	PM10 Total	Fugitive PM2.5	Exhaust PM2.5	PM2.5 Total	Bio- CO2	NBio- CO2	Total CO2	CH4	N2O	CO2e
Category	tons/yr										MT/yr					
Hauling	0.0000	0.0000	0.0000	0.0000	0.0000	0.0000	0.0000	0.0000	0.0000	0.0000	0.0000	0.0000	0.0000	0.0000	0.0000	0.0000
Vendor	0.0000	0.0000	0.0000	0.0000	0.0000	0.0000	0.0000	0.0000	0.0000	0.0000	0.0000	0.0000	0.0000	0.0000	0.0000	0.0000
Worker	0.0000	0.0000	0.0000	0.0000	0.0000	0.0000	0.0000	0.0000	0.0000	0.0000	0.0000	0.0000	0.0000	0.0000	0.0000	0.0000
Total	**0.0000**	**0.0000**	**0.0000**	**0.0000**	**0.0000**	**0.0000**	**0.0000**	**0.0000**	**0.0000**	**0.0000**	**0.0000**	**0.0000**	**0.0000**	**0.0000**	**0.0000**	**0.0000**

3.16 Year 14 - 2033

Unmitigated Construction On-Site

	ROG	NOx	CO	SO2	Fugitive PM10	Exhaust PM10	PM10 Total	Fugitive PM2.5	Exhaust PM2.5	PM2.5 Total	Bio- CO2	NBio- CO2	Total CO2	CH4	N2O	CO2e
Category	tons/yr										MT/yr					
Off-Road	0.1266	0.4847	1.0071	5.0000e-003		0.0151	0.0151		0.0151	0.0151	0.0000	513.6884	513.6884	9.6800e-003	0.0000	513.8916
Total	**0.1266**	**0.4847**	**1.0071**	**5.0000e-003**		**0.0151**	**0.0151**		**0.0151**	**0.0151**	**0.0000**	**513.6884**	**513.6884**	**9.6800e-003**	**0.0000**	**513.8916**

3.16 Year 14 - 2033

Unmitigated Construction Off-Site

	ROG	NOx	CO	SO2	Fugitive PM10	Exhaust PM10	PM10 Total	Fugitive PM2.5	Exhaust PM2.5	PM2.5 Total	Bio- CO2	NBio- CO2	Total CO2	CH4	N2O	CO2e
Category	tons/yr										MT/yr					
Hauling	0.0000	0.0000	0.0000	0.0000	0.0000	0.0000	0.0000	0.0000	0.0000	0.0000	0.0000	0.0000	0.0000	0.0000	0.0000	0.0000
Vendor	0.0000	0.0000	0.0000	0.0000	0.0000	0.0000	0.0000	0.0000	0.0000	0.0000	0.0000	0.0000	0.0000	0.0000	0.0000	0.0000
Worker	0.0000	0.0000	0.0000	0.0000	0.0000	0.0000	0.0000	0.0000	0.0000	0.0000	0.0000	0.0000	0.0000	0.0000	0.0000	0.0000
Total	**0.0000**	**0.0000**	**0.0000**	**0.0000**	**0.0000**	**0.0000**	**0.0000**	**0.0000**	**0.0000**	**0.0000**	**0.0000**	**0.0000**	**0.0000**	**0.0000**	**0.0000**	**0.0000**

Mitigated Construction On-Site

	ROG	NOx	CO	SO2	Fugitive PM10	Exhaust PM10	PM10 Total	Fugitive PM2.5	Exhaust PM2.5	PM2.5 Total	Bio- CO2	NBio- CO2	Total CO2	CH4	N2O	CO2e
Category	tons/yr										MT/yr					
Off-Road	0.0551	0.2529	2.3070	5.0000e-003		7.3900e-003	7.3900e-003		7.3900e-003	7.3900e-003	0.0000	513.6878	513.6878	9.6800e-003	0.0000	513.8910
Total	**0.0551**	**0.2529**	**2.3070**	**5.0000e-003**		**7.3900e-003**	**7.3900e-003**		**7.3900e-003**	**7.3900e-003**	**0.0000**	**513.6878**	**513.6878**	**9.6800e-003**	**0.0000**	**513.8910**

3.16 Year 14 - 2033

Mitigated Construction Off-Site

	ROG	NOx	CO	SO2	Fugitive PM10	Exhaust PM10	PM10 Total	Fugitive PM2.5	Exhaust PM2.5	PM2.5 Total	Bio- CO2	NBio- CO2	Total CO2	CH4	N2O	CO2e
Category	tons/yr										MT/yr					
Hauling	0.0000	0.0000	0.0000	0.0000	0.0000	0.0000	0.0000	0.0000	0.0000	0.0000	0.0000	0.0000	0.0000	0.0000	0.0000	0.0000
Vendor	0.0000	0.0000	0.0000	0.0000	0.0000	0.0000	0.0000	0.0000	0.0000	0.0000	0.0000	0.0000	0.0000	0.0000	0.0000	0.0000
Worker	0.0000	0.0000	0.0000	0.0000	0.0000	0.0000	0.0000	0.0000	0.0000	0.0000	0.0000	0.0000	0.0000	0.0000	0.0000	0.0000
Total	**0.0000**	**0.0000**	**0.0000**	**0.0000**	**0.0000**	**0.0000**	**0.0000**	**0.0000**	**0.0000**	**0.0000**	**0.0000**	**0.0000**	**0.0000**	**0.0000**	**0.0000**	**0.0000**

3.17 Year 15 - 2034

Unmitigated Construction On-Site

	ROG	NOx	CO	SO2	Fugitive PM10	Exhaust PM10	PM10 Total	Fugitive PM2.5	Exhaust PM2.5	PM2.5 Total	Bio- CO2	NBio- CO2	Total CO2	CH4	N2O	CO2e
Category	tons/yr										MT/yr					
Off-Road	0.3910	1.5003	3.1158	0.0155		0.0466	0.0466		0.0466	0.0466	0.0000	1,591.1696	1,591.1696	0.0299	0.0000	1,591.7971
Total	**0.3910**	**1.5003**	**3.1158**	**0.0155**		**0.0466**	**0.0466**		**0.0466**	**0.0466**	**0.0000**	**1,591.1696**	**1,591.1696**	**0.0299**	**0.0000**	**1,591.7971**

3.17 Year 15 - 2034

Unmitigated Construction Off-Site

	ROG	NOx	CO	SO2	Fugitive PM10	Exhaust PM10	PM10 Total	Fugitive PM2.5	Exhaust PM2.5	PM2.5 Total	Bio- CO2	NBio- CO2	Total CO2	CH4	N2O	CO2e
Category	tons/yr										MT/yr					
Hauling	0.0000	0.0000	0.0000	0.0000	0.0000	0.0000	0.0000	0.0000	0.0000	0.0000	0.0000	0.0000	0.0000	0.0000	0.0000	0.0000
Vendor	0.0000	0.0000	0.0000	0.0000	0.0000	0.0000	0.0000	0.0000	0.0000	0.0000	0.0000	0.0000	0.0000	0.0000	0.0000	0.0000
Worker	0.0000	0.0000	0.0000	0.0000	0.0000	0.0000	0.0000	0.0000	0.0000	0.0000	0.0000	0.0000	0.0000	0.0000	0.0000	0.0000
Total	**0.0000**	**0.0000**	**0.0000**	**0.0000**	**0.0000**	**0.0000**	**0.0000**	**0.0000**	**0.0000**	**0.0000**	**0.0000**	**0.0000**	**0.0000**	**0.0000**	**0.0000**	**0.0000**

Mitigated Construction On-Site

	ROG	NOx	CO	SO2	Fugitive PM10	Exhaust PM10	PM10 Total	Fugitive PM2.5	Exhaust PM2.5	PM2.5 Total	Bio- CO2	NBio- CO2	Total CO2	CH4	N2O	CO2e
Category	tons/yr										MT/yr					
Off-Road	0.1707	0.7819	7.1470	0.0155		0.0229	0.0229		0.0229	0.0229	0.0000	1,591.1677	1,591.1677	0.0299	0.0000	1,591.7952
Total	**0.1707**	**0.7819**	**7.1470**	**0.0155**		**0.0229**	**0.0229**		**0.0229**	**0.0229**	**0.0000**	**1,591.1677**	**1,591.1677**	**0.0299**	**0.0000**	**1,591.7952**

3.17 Year 15 - 2034

Mitigated Construction Off-Site

	ROG	NOx	CO	SO2	Fugitive PM10	Exhaust PM10	PM10 Total	Fugitive PM2.5	Exhaust PM2.5	PM2.5 Total	Bio- CO2	NBio- CO2	Total CO2	CH4	N2O	CO2e
Category	tons/yr										MT/yr					
Hauling	0.0000	0.0000	0.0000	0.0000	0.0000	0.0000	0.0000	0.0000	0.0000	0.0000	0.0000	0.0000	0.0000	0.0000	0.0000	0.0000
Vendor	0.0000	0.0000	0.0000	0.0000	0.0000	0.0000	0.0000	0.0000	0.0000	0.0000	0.0000	0.0000	0.0000	0.0000	0.0000	0.0000
Worker	0.0000	0.0000	0.0000	0.0000	0.0000	0.0000	0.0000	0.0000	0.0000	0.0000	0.0000	0.0000	0.0000	0.0000	0.0000	0.0000
Total	**0.0000**	**0.0000**	**0.0000**	**0.0000**	**0.0000**	**0.0000**	**0.0000**	**0.0000**	**0.0000**	**0.0000**	**0.0000**	**0.0000**	**0.0000**	**0.0000**	**0.0000**	**0.0000**

3.18 Year 16 - 2035

Unmitigated Construction On-Site

	ROG	NOx	CO	SO2	Fugitive PM10	Exhaust PM10	PM10 Total	Fugitive PM2.5	Exhaust PM2.5	PM2.5 Total	Bio- CO2	NBio- CO2	Total CO2	CH4	N2O	CO2e
Category	tons/yr										MT/yr					
Off-Road	0.4639	1.3507	3.9831	0.0198		0.0439	0.0439		0.0439	0.0439	0.0000	2,036.0376	2,036.0376	0.0350	0.0000	2,036.7730
Total	**0.4639**	**1.3507**	**3.9831**	**0.0198**		**0.0439**	**0.0439**		**0.0439**	**0.0439**	**0.0000**	**2,036.0376**	**2,036.0376**	**0.0350**	**0.0000**	**2,036.7730**

3.18 Year 16 - 2035

Unmitigated Construction Off-Site

	ROG	NOx	CO	SO2	Fugitive PM10	Exhaust PM10	PM10 Total	Fugitive PM2.5	Exhaust PM2.5	PM2.5 Total	Bio- CO2	NBio- CO2	Total CO2	CH4	N2O	CO2e
Category	tons/yr										MT/yr					
Hauling	0.0000	0.0000	0.0000	0.0000	0.0000	0.0000	0.0000	0.0000	0.0000	0.0000	0.0000	0.0000	0.0000	0.0000	0.0000	0.0000
Vendor	0.0000	0.0000	0.0000	0.0000	0.0000	0.0000	0.0000	0.0000	0.0000	0.0000	0.0000	0.0000	0.0000	0.0000	0.0000	0.0000
Worker	0.0000	0.0000	0.0000	0.0000	0.0000	0.0000	0.0000	0.0000	0.0000	0.0000	0.0000	0.0000	0.0000	0.0000	0.0000	0.0000
Total	**0.0000**	**0.0000**	**0.0000**	**0.0000**	**0.0000**	**0.0000**	**0.0000**	**0.0000**	**0.0000**	**0.0000**	**0.0000**	**0.0000**	**0.0000**	**0.0000**	**0.0000**	**0.0000**

Mitigated Construction On-Site

	ROG	NOx	CO	SO2	Fugitive PM10	Exhaust PM10	PM10 Total	Fugitive PM2.5	Exhaust PM2.5	PM2.5 Total	Bio- CO2	NBio- CO2	Total CO2	CH4	N2O	CO2e
Category	tons/yr										MT/yr					
Off-Road	0.2213	1.0502	9.1454	0.0198		0.0306	0.0306		0.0306	0.0306	0.0000	2,036.0352	2,036.0352	0.0350	0.0000	2,036.7705
Total	**0.2213**	**1.0502**	**9.1454**	**0.0198**		**0.0306**	**0.0306**		**0.0306**	**0.0306**	**0.0000**	**2,036.0352**	**2,036.0352**	**0.0350**	**0.0000**	**2,036.7705**

3.18 Year 16 - 2035

Mitigated Construction Off-Site

	ROG	NOx	CO	SO2	Fugitive PM10	Exhaust PM10	PM10 Total	Fugitive PM2.5	Exhaust PM2.5	PM2.5 Total	Bio- CO2	NBio- CO2	Total CO2	CH4	N2O	CO2e
Category	tons/yr										MT/yr					
Hauling	0.0000	0.0000	0.0000	0.0000	0.0000	0.0000	0.0000	0.0000	0.0000	0.0000	0.0000	0.0000	0.0000	0.0000	0.0000	0.0000
Vendor	0.0000	0.0000	0.0000	0.0000	0.0000	0.0000	0.0000	0.0000	0.0000	0.0000	0.0000	0.0000	0.0000	0.0000	0.0000	0.0000
Worker	0.0000	0.0000	0.0000	0.0000	0.0000	0.0000	0.0000	0.0000	0.0000	0.0000	0.0000	0.0000	0.0000	0.0000	0.0000	0.0000
Total	**0.0000**	**0.0000**	**0.0000**	**0.0000**	**0.0000**	**0.0000**	**0.0000**	**0.0000**	**0.0000**	**0.0000**	**0.0000**	**0.0000**	**0.0000**	**0.0000**	**0.0000**	**0.0000**

3.19 Year 17 - 2036

Unmitigated Construction On-Site

	ROG	NOx	CO	SO2	Fugitive PM10	Exhaust PM10	PM10 Total	Fugitive PM2.5	Exhaust PM2.5	PM2.5 Total	Bio- CO2	NBio- CO2	Total CO2	CH4	N2O	CO2e
Category	tons/yr										MT/yr					
Off-Road	0.5878	1.7083	5.0322	0.0250		0.0554	0.0554		0.0554	0.0554	0.0000	2,567.4623	2,567.4623	0.0444	0.0000	2,568.3947
Total	**0.5878**	**1.7083**	**5.0322**	**0.0250**		**0.0554**	**0.0554**		**0.0554**	**0.0554**	**0.0000**	**2,567.4623**	**2,567.4623**	**0.0444**	**0.0000**	**2,568.3947**

3.19 Year 17 - 2036

Unmitigated Construction Off-Site

	ROG	NOx	CO	SO2	Fugitive PM10	Exhaust PM10	PM10 Total	Fugitive PM2.5	Exhaust PM2.5	PM2.5 Total	Bio- CO2	NBio- CO2	Total CO2	CH4	N2O	CO2e
Category	tons/yr										MT/yr					
Hauling					0.0000	0.0000	0.0000	0.0000	0.0000	0.0000	0.0000	0.0000	0.0000	0.0000	0.0000	0.0000
Vendor					0.0000	0.0000	0.0000	0.0000	0.0000	0.0000	0.0000	0.0000	0.0000	0.0000	0.0000	0.0000
Worker					0.0000	0.0000	0.0000	0.0000	0.0000	0.0000	0.0000	0.0000	0.0000	0.0000	0.0000	0.0000
Total					**0.0000**	**0.0000**	**0.0000**	**0.0000**	**0.0000**	**0.0000**	**0.0000**	**0.0000**	**0.0000**	**0.0000**	**0.0000**	**0.0000**

Mitigated Construction On-Site

	ROG	NOx	CO	SO2	Fugitive PM10	Exhaust PM10	PM10 Total	Fugitive PM2.5	Exhaust PM2.5	PM2.5 Total	Bio- CO2	NBio- CO2	Total CO2	CH4	N2O	CO2e
Category	tons/yr										MT/yr					
Off-Road	0.2794	1.3284	11.5300	0.0250		0.0386	0.0386		0.0386	0.0386	0.0000	2,567.4592	2,567.4592	0.0444	0.0000	2,568.3917
Total	**0.2794**	**1.3284**	**11.5300**	**0.0250**		**0.0386**	**0.0386**		**0.0386**	**0.0386**	**0.0000**	**2,567.4592**	**2,567.4592**	**0.0444**	**0.0000**	**2,568.3917**

3.19 Year 17 - 2036

Mitigated Construction Off-Site

	ROG	NOx	CO	SO2	Fugitive PM10	Exhaust PM10	PM10 Total	Fugitive PM2.5	Exhaust PM2.5	PM2.5 Total	Bio- CO2	NBio- CO2	Total CO2	CH4	N2O	CO2e
Category	tons/yr										MT/yr					
Hauling					0.0000	0.0000	0.0000	0.0000	0.0000	0.0000	0.0000	0.0000	0.0000	0.0000	0.0000	0.0000
Vendor					0.0000	0.0000	0.0000	0.0000	0.0000	0.0000	0.0000	0.0000	0.0000	0.0000	0.0000	0.0000
Worker					0.0000	0.0000	0.0000	0.0000	0.0000	0.0000	0.0000	0.0000	0.0000	0.0000	0.0000	0.0000
Total					**0.0000**	**0.0000**	**0.0000**	**0.0000**	**0.0000**	**0.0000**	**0.0000**	**0.0000**	**0.0000**	**0.0000**	**0.0000**	**0.0000**

3.20 Year 18 - 2037

Unmitigated Construction On-Site

	ROG	NOx	CO	SO2	Fugitive PM10	Exhaust PM10	PM10 Total	Fugitive PM2.5	Exhaust PM2.5	PM2.5 Total	Bio- CO2	NBio- CO2	Total CO2	CH4	N2O	CO2e
Category	tons/yr										MT/yr					
Off-Road	0.1652	0.4801	1.4141	7.0200e-003		0.0156	0.0156		0.0156	0.0156	0.0000	721.3763	721.3763	0.0125	0.0000	721.6383
Total	**0.1652**	**0.4801**	**1.4141**	**7.0200e-003**		**0.0156**	**0.0156**		**0.0156**	**0.0156**	**0.0000**	**721.3763**	**721.3763**	**0.0125**	**0.0000**	**721.6383**

3.20 Year 18 - 2037

Unmitigated Construction Off-Site

	ROG	NOx	CO	SO2	Fugitive PM10	Exhaust PM10	PM10 Total	Fugitive PM2.5	Exhaust PM2.5	PM2.5 Total	Bio- CO2	NBio- CO2	Total CO2	CH4	N2O	CO2e
Category	tons/yr										MT/yr					
Hauling					0.0000	0.0000	0.0000	0.0000	0.0000	0.0000	0.0000	0.0000	0.0000	0.0000	0.0000	0.0000
Vendor					0.0000	0.0000	0.0000	0.0000	0.0000	0.0000	0.0000	0.0000	0.0000	0.0000	0.0000	0.0000
Worker					0.0000	0.0000	0.0000	0.0000	0.0000	0.0000	0.0000	0.0000	0.0000	0.0000	0.0000	0.0000
Total					**0.0000**	**0.0000**	**0.0000**	**0.0000**	**0.0000**	**0.0000**	**0.0000**	**0.0000**	**0.0000**	**0.0000**	**0.0000**	**0.0000**

Mitigated Construction On-Site

	ROG	NOx	CO	SO2	Fugitive PM10	Exhaust PM10	PM10 Total	Fugitive PM2.5	Exhaust PM2.5	PM2.5 Total	Bio- CO2	NBio- CO2	Total CO2	CH4	N2O	CO2e
Category	tons/yr										MT/yr					
Off-Road	0.0785	0.3733	3.2396	7.0200e-003		0.0108	0.0108		0.0108	0.0108	0.0000	721.3754	721.3754	0.0125	0.0000	721.6375
Total	**0.0785**	**0.3733**	**3.2396**	**7.0200e-003**		**0.0108**	**0.0108**		**0.0108**	**0.0108**	**0.0000**	**721.3754**	**721.3754**	**0.0125**	**0.0000**	**721.6375**

3.20 Year 18 - 2037

Mitigated Construction Off-Site

	ROG	NOx	CO	SO2	Fugitive PM10	Exhaust PM10	PM10 Total	Fugitive PM2.5	Exhaust PM2.5	PM2.5 Total	Bio- CO2	NBio- CO2	Total CO2	CH4	N2O	CO2e
Category	tons/yr										MT/yr					
Hauling					0.0000	0.0000	0.0000	0.0000	0.0000	0.0000	0.0000	0.0000	0.0000	0.0000	0.0000	0.0000
Vendor					0.0000	0.0000	0.0000	0.0000	0.0000	0.0000	0.0000	0.0000	0.0000	0.0000	0.0000	0.0000
Worker					0.0000	0.0000	0.0000	0.0000	0.0000	0.0000	0.0000	0.0000	0.0000	0.0000	0.0000	0.0000
Total					**0.0000**	**0.0000**	**0.0000**	**0.0000**	**0.0000**	**0.0000**	**0.0000**	**0.0000**	**0.0000**	**0.0000**	**0.0000**	**0.0000**

3.21 Year 19 - 2038

Unmitigated Construction On-Site

	ROG	NOx	CO	SO2	Fugitive PM10	Exhaust PM10	PM10 Total	Fugitive PM2.5	Exhaust PM2.5	PM2.5 Total	Bio- CO2	NBio- CO2	Total CO2	CH4	N2O	CO2e
Category	tons/yr										MT/yr					
Off-Road	0.1649	0.4792	1.4119	7.0100e-003		0.0156	0.0156		0.0156	0.0156	0.0000	720.5062	720.5062	0.0125	0.0000	720.7678
Total	**0.1649**	**0.4792**	**1.4119**	**7.0100e-003**		**0.0156**	**0.0156**		**0.0156**	**0.0156**	**0.0000**	**720.5062**	**720.5062**	**0.0125**	**0.0000**	**720.7678**

3.21 Year 19 - 2038

Unmitigated Construction Off-Site

	ROG	NOx	CO	SO2	Fugitive PM10	Exhaust PM10	PM10 Total	Fugitive PM2.5	Exhaust PM2.5	PM2.5 Total	Bio- CO2	NBio- CO2	Total CO2	CH4	N2O	CO2e
Category	tons/yr										MT/yr					
Hauling					0.0000	0.0000	0.0000	0.0000	0.0000	0.0000	0.0000	0.0000	0.0000	0.0000	0.0000	0.0000
Vendor					0.0000	0.0000	0.0000	0.0000	0.0000	0.0000	0.0000	0.0000	0.0000	0.0000	0.0000	0.0000
Worker					0.0000	0.0000	0.0000	0.0000	0.0000	0.0000	0.0000	0.0000	0.0000	0.0000	0.0000	0.0000
Total					**0.0000**	**0.0000**	**0.0000**	**0.0000**	**0.0000**	**0.0000**	**0.0000**	**0.0000**	**0.0000**	**0.0000**	**0.0000**	**0.0000**

Mitigated Construction On-Site

	ROG	NOx	CO	SO2	Fugitive PM10	Exhaust PM10	PM10 Total	Fugitive PM2.5	Exhaust PM2.5	PM2.5 Total	Bio- CO2	NBio- CO2	Total CO2	CH4	N2O	CO2e
Category	tons/yr										MT/yr					
Off-Road	0.0784	0.3727	3.2356	7.0100e-003		0.0108	0.0108		0.0108	0.0108	0.0000	720.5054	720.5054	0.0125	0.0000	720.7670
Total	**0.0784**	**0.3727**	**3.2356**	**7.0100e-003**		**0.0108**	**0.0108**		**0.0108**	**0.0108**	**0.0000**	**720.5054**	**720.5054**	**0.0125**	**0.0000**	**720.7670**

3.21 Year 19 - 2038

Mitigated Construction Off-Site

	ROG	NOx	CO	SO2	Fugitive PM10	Exhaust PM10	PM10 Total	Fugitive PM2.5	Exhaust PM2.5	PM2.5 Total	Bio- CO2	NBio- CO2	Total CO2	CH4	N2O	CO2e
Category	tons/yr										MT/yr					
Hauling					0.0000	0.0000	0.0000	0.0000	0.0000	0.0000	0.0000	0.0000	0.0000	0.0000	0.0000	0.0000
Vendor					0.0000	0.0000	0.0000	0.0000	0.0000	0.0000	0.0000	0.0000	0.0000	0.0000	0.0000	0.0000
Worker					0.0000	0.0000	0.0000	0.0000	0.0000	0.0000	0.0000	0.0000	0.0000	0.0000	0.0000	0.0000
Total					**0.0000**	**0.0000**	**0.0000**	**0.0000**	**0.0000**	**0.0000**	**0.0000**	**0.0000**	**0.0000**	**0.0000**	**0.0000**	**0.0000**

3.22 Year 20 - 2039

Unmitigated Construction On-Site

	ROG	NOx	CO	SO2	Fugitive PM10	Exhaust PM10	PM10 Total	Fugitive PM2.5	Exhaust PM2.5	PM2.5 Total	Bio- CO2	NBio- CO2	Total CO2	CH4	N2O	CO2e
Category	tons/yr										MT/yr					
Off-Road	0.1649	0.4792	1.4119	7.0100e-003		0.0156	0.0156		0.0156	0.0156	0.0000	720.5062	720.5062	0.0125	0.0000	720.7678
Total	**0.1649**	**0.4792**	**1.4119**	**7.0100e-003**		**0.0156**	**0.0156**		**0.0156**	**0.0156**	**0.0000**	**720.5062**	**720.5062**	**0.0125**	**0.0000**	**720.7678**

3.22 Year 20 - 2039

Unmitigated Construction Off-Site

	ROG	NOx	CO	SO2	Fugitive PM10	Exhaust PM10	PM10 Total	Fugitive PM2.5	Exhaust PM2.5	PM2.5 Total	Bio- CO2	NBio- CO2	Total CO2	CH4	N2O	CO2e
Category	tons/yr										MT/yr					
Hauling					0.0000	0.0000	0.0000	0.0000	0.0000	0.0000	0.0000	0.0000	0.0000	0.0000	0.0000	0.0000
Vendor					0.0000	0.0000	0.0000	0.0000	0.0000	0.0000	0.0000	0.0000	0.0000	0.0000	0.0000	0.0000
Worker					0.0000	0.0000	0.0000	0.0000	0.0000	0.0000	0.0000	0.0000	0.0000	0.0000	0.0000	0.0000
Total					**0.0000**	**0.0000**	**0.0000**	**0.0000**	**0.0000**	**0.0000**	**0.0000**	**0.0000**	**0.0000**	**0.0000**	**0.0000**	**0.0000**

Mitigated Construction On-Site

	ROG	NOx	CO	SO2	Fugitive PM10	Exhaust PM10	PM10 Total	Fugitive PM2.5	Exhaust PM2.5	PM2.5 Total	Bio- CO2	NBio- CO2	Total CO2	CH4	N2O	CO2e
Category	tons/yr										MT/yr					
Off-Road	0.0784	0.3727	3.2356	7.0100e-003		0.0108	0.0108		0.0108	0.0108	0.0000	720.5054	720.5054	0.0125	0.0000	720.7670
Total	**0.0784**	**0.3727**	**3.2356**	**7.0100e-003**		**0.0108**	**0.0108**		**0.0108**	**0.0108**	**0.0000**	**720.5054**	**720.5054**	**0.0125**	**0.0000**	**720.7670**

3.22 Year 20 - 2039

Mitigated Construction Off-Site

	ROG	NOx	CO	SO2	Fugitive PM10	Exhaust PM10	PM10 Total	Fugitive PM2.5	Exhaust PM2.5	PM2.5 Total	Bio- CO2	NBio- CO2	Total CO2	CH4	N2O	CO2e
Category	tons/yr										MT/yr					
Hauling					0.0000	0.0000	0.0000	0.0000	0.0000	0.0000	0.0000	0.0000	0.0000	0.0000	0.0000	0.0000
Vendor					0.0000	0.0000	0.0000	0.0000	0.0000	0.0000	0.0000	0.0000	0.0000	0.0000	0.0000	0.0000
Worker					0.0000	0.0000	0.0000	0.0000	0.0000	0.0000	0.0000	0.0000	0.0000	0.0000	0.0000	0.0000
Total					**0.0000**	**0.0000**	**0.0000**	**0.0000**	**0.0000**	**0.0000**	**0.0000**	**0.0000**	**0.0000**	**0.0000**	**0.0000**	**0.0000**

3.23 Year 21 - 2040

Unmitigated Construction On-Site

	ROG	NOx	CO	SO2	Fugitive PM10	Exhaust PM10	PM10 Total	Fugitive PM2.5	Exhaust PM2.5	PM2.5 Total	Bio- CO2	NBio- CO2	Total CO2	CH4	N2O	CO2e
Category	tons/yr										MT/yr					
Off-Road	0.1599	0.4129	1.4140	7.0200e-003		0.0129	0.0129		0.0129	0.0129	0.0000	721.3774	721.3774	0.0125	0.0000	721.6391
Total	**0.1599**	**0.4129**	**1.4140**	**7.0200e-003**		**0.0129**	**0.0129**		**0.0129**	**0.0129**	**0.0000**	**721.3774**	**721.3774**	**0.0125**	**0.0000**	**721.6391**

3.23 Year 21 - 2040

Unmitigated Construction Off-Site

	ROG	NOx	CO	SO2	Fugitive PM10	Exhaust PM10	PM10 Total	Fugitive PM2.5	Exhaust PM2.5	PM2.5 Total	Bio- CO2	NBio- CO2	Total CO2	CH4	N2O	CO2e
Category	tons/yr										MT/yr					
Hauling					0.0000	0.0000	0.0000	0.0000	0.0000	0.0000	0.0000	0.0000	0.0000	0.0000	0.0000	0.0000
Vendor					0.0000	0.0000	0.0000	0.0000	0.0000	0.0000	0.0000	0.0000	0.0000	0.0000	0.0000	0.0000
Worker					0.0000	0.0000	0.0000	0.0000	0.0000	0.0000	0.0000	0.0000	0.0000	0.0000	0.0000	0.0000
Total					**0.0000**	**0.0000**	**0.0000**	**0.0000**	**0.0000**	**0.0000**	**0.0000**	**0.0000**	**0.0000**	**0.0000**	**0.0000**	**0.0000**

Mitigated Construction On-Site

	ROG	NOx	CO	SO2	Fugitive PM10	Exhaust PM10	PM10 Total	Fugitive PM2.5	Exhaust PM2.5	PM2.5 Total	Bio- CO2	NBio- CO2	Total CO2	CH4	N2O	CO2e
Category	tons/yr										MT/yr					
Off-Road	0.0790	0.3793	3.2396	7.0200e-003		0.0111	0.0111		0.0111	0.0111	0.0000	721.3765	721.3765	0.0125	0.0000	721.6383
Total	**0.0790**	**0.3793**	**3.2396**	**7.0200e-003**		**0.0111**	**0.0111**		**0.0111**	**0.0111**	**0.0000**	**721.3765**	**721.3765**	**0.0125**	**0.0000**	**721.6383**

3.23 Year 21 - 2040

Mitigated Construction Off-Site

	ROG	NOx	CO	SO2	Fugitive PM10	Exhaust PM10	PM10 Total	Fugitive PM2.5	Exhaust PM2.5	PM2.5 Total	Bio- CO2	NBio- CO2	Total CO2	CH4	N2O	CO2e
Category	tons/yr										MT/yr					
Hauling					0.0000	0.0000	0.0000	0.0000	0.0000	0.0000	0.0000	0.0000	0.0000	0.0000	0.0000	0.0000
Vendor					0.0000	0.0000	0.0000	0.0000	0.0000	0.0000	0.0000	0.0000	0.0000	0.0000	0.0000	0.0000
Worker					0.0000	0.0000	0.0000	0.0000	0.0000	0.0000	0.0000	0.0000	0.0000	0.0000	0.0000	0.0000
Total					**0.0000**	**0.0000**	**0.0000**	**0.0000**	**0.0000**	**0.0000**	**0.0000**	**0.0000**	**0.0000**	**0.0000**	**0.0000**	**0.0000**

3.24 Year 22 - 2041

Unmitigated Construction On-Site

	ROG	NOx	CO	SO2	Fugitive PM10	Exhaust PM10	PM10 Total	Fugitive PM2.5	Exhaust PM2.5	PM2.5 Total	Bio- CO2	NBio- CO2	Total CO2	CH4	N2O	CO2e
Category	tons/yr										MT/yr					
Off-Road	0.1599	0.4129	1.4140	7.0200e-003		0.0129	0.0129		0.0129	0.0129	0.0000	721.3774	721.3774	0.0125	0.0000	721.6391
Total	**0.1599**	**0.4129**	**1.4140**	**7.0200e-003**		**0.0129**	**0.0129**		**0.0129**	**0.0129**	**0.0000**	**721.3774**	**721.3774**	**0.0125**	**0.0000**	**721.6391**

3.24 Year 22 - 2041

Unmitigated Construction Off-Site

	ROG	NOx	CO	SO2	Fugitive PM10	Exhaust PM10	PM10 Total	Fugitive PM2.5	Exhaust PM2.5	PM2.5 Total	Bio- CO2	NBio- CO2	Total CO2	CH4	N2O	CO2e
Category	tons/yr										MT/yr					
Hauling					0.0000	0.0000	0.0000	0.0000	0.0000	0.0000	0.0000	0.0000	0.0000	0.0000	0.0000	0.0000
Vendor					0.0000	0.0000	0.0000	0.0000	0.0000	0.0000	0.0000	0.0000	0.0000	0.0000	0.0000	0.0000
Worker					0.0000	0.0000	0.0000	0.0000	0.0000	0.0000	0.0000	0.0000	0.0000	0.0000	0.0000	0.0000
Total					**0.0000**	**0.0000**	**0.0000**	**0.0000**	**0.0000**	**0.0000**	**0.0000**	**0.0000**	**0.0000**	**0.0000**	**0.0000**	**0.0000**

Mitigated Construction On-Site

	ROG	NOx	CO	SO2	Fugitive PM10	Exhaust PM10	PM10 Total	Fugitive PM2.5	Exhaust PM2.5	PM2.5 Total	Bio- CO2	NBio- CO2	Total CO2	CH4	N2O	CO2e
Category	tons/yr										MT/yr					
Off-Road	0.0790	0.3793	3.2396	7.0200e-003		0.0111	0.0111		0.0111	0.0111	0.0000	721.3765	721.3765	0.0125	0.0000	721.6383
Total	**0.0790**	**0.3793**	**3.2396**	**7.0200e-003**		**0.0111**	**0.0111**		**0.0111**	**0.0111**	**0.0000**	**721.3765**	**721.3765**	**0.0125**	**0.0000**	**721.6383**

3.24 Year 22 - 2041

Mitigated Construction Off-Site

	ROG	NOx	CO	SO2	Fugitive PM10	Exhaust PM10	PM10 Total	Fugitive PM2.5	Exhaust PM2.5	PM2.5 Total	Bio- CO2	NBio- CO2	Total CO2	CH4	N2O	CO2e
Category	tons/yr										MT/yr					
Hauling					0.0000	0.0000	0.0000	0.0000	0.0000	0.0000	0.0000	0.0000	0.0000	0.0000	0.0000	0.0000
Vendor					0.0000	0.0000	0.0000	0.0000	0.0000	0.0000	0.0000	0.0000	0.0000	0.0000	0.0000	0.0000
Worker					0.0000	0.0000	0.0000	0.0000	0.0000	0.0000	0.0000	0.0000	0.0000	0.0000	0.0000	0.0000
Total					**0.0000**	**0.0000**	**0.0000**	**0.0000**	**0.0000**	**0.0000**	**0.0000**	**0.0000**	**0.0000**	**0.0000**	**0.0000**	**0.0000**

3.25 Year 23 - 2042

Unmitigated Construction On-Site

	ROG	NOx	CO	SO2	Fugitive PM10	Exhaust PM10	PM10 Total	Fugitive PM2.5	Exhaust PM2.5	PM2.5 Total	Bio- CO2	NBio- CO2	Total CO2	CH4	N2O	CO2e
Category	tons/yr										MT/yr					
Off-Road	0.1599	0.4129	1.4140	7.0200e-003		0.0129	0.0129		0.0129	0.0129	0.0000	721.3774	721.3774	0.0125	0.0000	721.6391
Total	**0.1599**	**0.4129**	**1.4140**	**7.0200e-003**		**0.0129**	**0.0129**		**0.0129**	**0.0129**	**0.0000**	**721.3774**	**721.3774**	**0.0125**	**0.0000**	**721.6391**

3.25 Year 23 - 2042

Unmitigated Construction Off-Site

	ROG	NOx	CO	SO2	Fugitive PM10	Exhaust PM10	PM10 Total	Fugitive PM2.5	Exhaust PM2.5	PM2.5 Total	Bio- CO2	NBio- CO2	Total CO2	CH4	N2O	CO2e
Category	tons/yr										MT/yr					
Hauling					0.0000	0.0000	0.0000	0.0000	0.0000	0.0000	0.0000	0.0000	0.0000	0.0000	0.0000	0.0000
Vendor					0.0000	0.0000	0.0000	0.0000	0.0000	0.0000	0.0000	0.0000	0.0000	0.0000	0.0000	0.0000
Worker					0.0000	0.0000	0.0000	0.0000	0.0000	0.0000	0.0000	0.0000	0.0000	0.0000	0.0000	0.0000
Total					**0.0000**	**0.0000**	**0.0000**	**0.0000**	**0.0000**	**0.0000**	**0.0000**	**0.0000**	**0.0000**	**0.0000**	**0.0000**	**0.0000**

Mitigated Construction On-Site

	ROG	NOx	CO	SO2	Fugitive PM10	Exhaust PM10	PM10 Total	Fugitive PM2.5	Exhaust PM2.5	PM2.5 Total	Bio- CO2	NBio- CO2	Total CO2	CH4	N2O	CO2e
Category	tons/yr										MT/yr					
Off-Road	0.0790	0.3793	3.2396	7.0200e-003		0.0111	0.0111		0.0111	0.0111	0.0000	721.3765	721.3765	0.0125	0.0000	721.6383
Total	**0.0790**	**0.3793**	**3.2396**	**7.0200e-003**		**0.0111**	**0.0111**		**0.0111**	**0.0111**	**0.0000**	**721.3765**	**721.3765**	**0.0125**	**0.0000**	**721.6383**

3.25 Year 23 - 2042

Mitigated Construction Off-Site

	ROG	NOx	CO	SO2	Fugitive PM10	Exhaust PM10	PM10 Total	Fugitive PM2.5	Exhaust PM2.5	PM2.5 Total	Bio- CO2	NBio- CO2	Total CO2	CH4	N2O	CO2e
Category	tons/yr										MT/yr					
Hauling					0.0000	0.0000	0.0000	0.0000	0.0000	0.0000	0.0000	0.0000	0.0000	0.0000	0.0000	0.0000
Vendor					0.0000	0.0000	0.0000	0.0000	0.0000	0.0000	0.0000	0.0000	0.0000	0.0000	0.0000	0.0000
Worker					0.0000	0.0000	0.0000	0.0000	0.0000	0.0000	0.0000	0.0000	0.0000	0.0000	0.0000	0.0000
Total					**0.0000**	**0.0000**	**0.0000**	**0.0000**	**0.0000**	**0.0000**	**0.0000**	**0.0000**	**0.0000**	**0.0000**	**0.0000**	**0.0000**

3.26 Year 24 - 2043

Unmitigated Construction On-Site

	ROG	NOx	CO	SO2	Fugitive PM10	Exhaust PM10	PM10 Total	Fugitive PM2.5	Exhaust PM2.5	PM2.5 Total	Bio- CO2	NBio- CO2	Total CO2	CH4	N2O	CO2e
Category	tons/yr										MT/yr					
Off-Road	0.2341	0.6068	2.0984	0.0105		0.0192	0.0192		0.0192	0.0192	0.0000	1,082.1772	1,082.1772	0.0182	0.0000	1,082.5589
Total	**0.2341**	**0.6068**	**2.0984**	**0.0105**		**0.0192**	**0.0192**		**0.0192**	**0.0192**	**0.0000**	**1,082.1772**	**1,082.1772**	**0.0182**	**0.0000**	**1,082.5589**

3.26 Year 24 - 2043

Unmitigated Construction Off-Site

	ROG	NOx	CO	SO2	Fugitive PM10	Exhaust PM10	PM10 Total	Fugitive PM2.5	Exhaust PM2.5	PM2.5 Total	Bio- CO2	NBio- CO2	Total CO2	CH4	N2O	CO2e
Category	tons/yr										MT/yr					
Hauling					0.0000	0.0000	0.0000	0.0000	0.0000	0.0000	0.0000	0.0000	0.0000	0.0000	0.0000	0.0000
Vendor					0.0000	0.0000	0.0000	0.0000	0.0000	0.0000	0.0000	0.0000	0.0000	0.0000	0.0000	0.0000
Worker					0.0000	0.0000	0.0000	0.0000	0.0000	0.0000	0.0000	0.0000	0.0000	0.0000	0.0000	0.0000
Total					**0.0000**	**0.0000**	**0.0000**	**0.0000**	**0.0000**	**0.0000**	**0.0000**	**0.0000**	**0.0000**	**0.0000**	**0.0000**	**0.0000**

Mitigated Construction On-Site

	ROG	NOx	CO	SO2	Fugitive PM10	Exhaust PM10	PM10 Total	Fugitive PM2.5	Exhaust PM2.5	PM2.5 Total	Bio- CO2	NBio- CO2	Total CO2	CH4	N2O	CO2e
Category	tons/yr										MT/yr					
Off-Road	0.1177	0.5601	4.8647	0.0105		0.0166	0.0166		0.0166	0.0166	0.0000	1,082.1759	1,082.1759	0.0182	0.0000	1,082.5576
Total	**0.1177**	**0.5601**	**4.8647**	**0.0105**		**0.0166**	**0.0166**		**0.0166**	**0.0166**	**0.0000**	**1,082.1759**	**1,082.1759**	**0.0182**	**0.0000**	**1,082.5576**

3.26 Year 24 - 2043

Mitigated Construction Off-Site

	ROG	NOx	CO	SO2	Fugitive PM10	Exhaust PM10	PM10 Total	Fugitive PM2.5	Exhaust PM2.5	PM2.5 Total	Bio- CO2	NBio- CO2	Total CO2	CH4	N2O	CO2e
Category	tons/yr										MT/yr					
Hauling					0.0000	0.0000	0.0000	0.0000	0.0000	0.0000	0.0000	0.0000	0.0000	0.0000	0.0000	0.0000
Vendor					0.0000	0.0000	0.0000	0.0000	0.0000	0.0000	0.0000	0.0000	0.0000	0.0000	0.0000	0.0000
Worker					0.0000	0.0000	0.0000	0.0000	0.0000	0.0000	0.0000	0.0000	0.0000	0.0000	0.0000	0.0000
Total					**0.0000**	**0.0000**	**0.0000**	**0.0000**	**0.0000**	**0.0000**	**0.0000**	**0.0000**	**0.0000**	**0.0000**	**0.0000**	**0.0000**

3.27 Year 25 - 2044

Unmitigated Construction On-Site

	ROG	NOx	CO	SO2	Fugitive PM10	Exhaust PM10	PM10 Total	Fugitive PM2.5	Exhaust PM2.5	PM2.5 Total	Bio- CO2	NBio- CO2	Total CO2	CH4	N2O	CO2e
Category	tons/yr										MT/yr					
Off-Road	0.2341	0.6068	2.0984	0.0105		0.0192	0.0192		0.0192	0.0192	0.0000	1,082.1772	1,082.1772	0.0182	0.0000	1,082.5589
Total	**0.2341**	**0.6068**	**2.0984**	**0.0105**		**0.0192**	**0.0192**		**0.0192**	**0.0192**	**0.0000**	**1,082.1772**	**1,082.1772**	**0.0182**	**0.0000**	**1,082.5589**

3.27 Year 25 - 2044

Unmitigated Construction Off-Site

	ROG	NOx	CO	SO2	Fugitive PM10	Exhaust PM10	PM10 Total	Fugitive PM2.5	Exhaust PM2.5	PM2.5 Total	Bio- CO2	NBio- CO2	Total CO2	CH4	N2O	CO2e
Category	tons/yr										MT/yr					
Hauling					0.0000	0.0000	0.0000	0.0000	0.0000	0.0000	0.0000	0.0000	0.0000	0.0000	0.0000	0.0000
Vendor					0.0000	0.0000	0.0000	0.0000	0.0000	0.0000	0.0000	0.0000	0.0000	0.0000	0.0000	0.0000
Worker					0.0000	0.0000	0.0000	0.0000	0.0000	0.0000	0.0000	0.0000	0.0000	0.0000	0.0000	0.0000
Total					**0.0000**	**0.0000**	**0.0000**	**0.0000**	**0.0000**	**0.0000**	**0.0000**	**0.0000**	**0.0000**	**0.0000**	**0.0000**	**0.0000**

Mitigated Construction On-Site

	ROG	NOx	CO	SO2	Fugitive PM10	Exhaust PM10	PM10 Total	Fugitive PM2.5	Exhaust PM2.5	PM2.5 Total	Bio- CO2	NBio- CO2	Total CO2	CH4	N2O	CO2e
Category	tons/yr										MT/yr					
Off-Road	0.1177	0.5601	4.8647	0.0105		0.0166	0.0166		0.0166	0.0166	0.0000	1,082.1759	1,082.1759	0.0182	0.0000	1,082.5576
Total	**0.1177**	**0.5601**	**4.8647**	**0.0105**		**0.0166**	**0.0166**		**0.0166**	**0.0166**	**0.0000**	**1,082.1759**	**1,082.1759**	**0.0182**	**0.0000**	**1,082.5576**

3.27 Year 25 - 2044

Mitigated Construction Off-Site

	ROG	NOx	CO	SO2	Fugitive PM10	Exhaust PM10	PM10 Total	Fugitive PM2.5	Exhaust PM2.5	PM2.5 Total	Bio- CO2	NBio- CO2	Total CO2	CH4	N2O	CO2e
Category	tons/yr										MT/yr					
Hauling					0.0000	0.0000	0.0000	0.0000	0.0000	0.0000	0.0000	0.0000	0.0000	0.0000	0.0000	0.0000
Vendor					0.0000	0.0000	0.0000	0.0000	0.0000	0.0000	0.0000	0.0000	0.0000	0.0000	0.0000	0.0000
Worker					0.0000	0.0000	0.0000	0.0000	0.0000	0.0000	0.0000	0.0000	0.0000	0.0000	0.0000	0.0000
Total					**0.0000**	**0.0000**	**0.0000**	**0.0000**	**0.0000**	**0.0000**	**0.0000**	**0.0000**	**0.0000**	**0.0000**	**0.0000**	**0.0000**

3.28 Year 26 - 2045

Unmitigated Construction On-Site

	ROG	NOx	CO	SO2	Fugitive PM10	Exhaust PM10	PM10 Total	Fugitive PM2.5	Exhaust PM2.5	PM2.5 Total	Bio- CO2	NBio- CO2	Total CO2	CH4	N2O	CO2e
Category	tons/yr										MT/yr					
Off-Road	0.2341	0.6068	2.0984	0.0105		0.0192	0.0192		0.0192	0.0192	0.0000	1,082.1772	1,082.1772	0.0182	0.0000	1,082.5589
Total	**0.2341**	**0.6068**	**2.0984**	**0.0105**		**0.0192**	**0.0192**		**0.0192**	**0.0192**	**0.0000**	**1,082.1772**	**1,082.1772**	**0.0182**	**0.0000**	**1,082.5589**

3.28 Year 26 - 2045

Unmitigated Construction Off-Site

	ROG	NOx	CO	SO2	Fugitive PM10	Exhaust PM10	PM10 Total	Fugitive PM2.5	Exhaust PM2.5	PM2.5 Total	Bio- CO2	NBio- CO2	Total CO2	CH4	N2O	CO2e
Category	tons/yr										MT/yr					
Hauling					0.0000	0.0000	0.0000	0.0000	0.0000	0.0000	0.0000	0.0000	0.0000	0.0000	0.0000	0.0000
Vendor					0.0000	0.0000	0.0000	0.0000	0.0000	0.0000	0.0000	0.0000	0.0000	0.0000	0.0000	0.0000
Worker					0.0000	0.0000	0.0000	0.0000	0.0000	0.0000	0.0000	0.0000	0.0000	0.0000	0.0000	0.0000
Total					**0.0000**	**0.0000**	**0.0000**	**0.0000**	**0.0000**	**0.0000**	**0.0000**	**0.0000**	**0.0000**	**0.0000**	**0.0000**	**0.0000**

Mitigated Construction On-Site

	ROG	NOx	CO	SO2	Fugitive PM10	Exhaust PM10	PM10 Total	Fugitive PM2.5	Exhaust PM2.5	PM2.5 Total	Bio- CO2	NBio- CO2	Total CO2	CH4	N2O	CO2e
Category	tons/yr										MT/yr					
Off-Road	0.1177	0.5601	4.8647	0.0105		0.0166	0.0166		0.0166	0.0166	0.0000	1,082.1759	1,082.1759	0.0182	0.0000	1,082.5576
Total	**0.1177**	**0.5601**	**4.8647**	**0.0105**		**0.0166**	**0.0166**		**0.0166**	**0.0166**	**0.0000**	**1,082.1759**	**1,082.1759**	**0.0182**	**0.0000**	**1,082.5576**

3.28 Year 26 - 2045

Mitigated Construction Off-Site

	ROG	NOx	CO	SO2	Fugitive PM10	Exhaust PM10	PM10 Total	Fugitive PM2.5	Exhaust PM2.5	PM2.5 Total	Bio- CO2	NBio- CO2	Total CO2	CH4	N2O	CO2e
Category	tons/yr										MT/yr					
Hauling					0.0000	0.0000	0.0000	0.0000	0.0000	0.0000	0.0000	0.0000	0.0000	0.0000	0.0000	0.0000
Vendor					0.0000	0.0000	0.0000	0.0000	0.0000	0.0000	0.0000	0.0000	0.0000	0.0000	0.0000	0.0000
Worker					0.0000	0.0000	0.0000	0.0000	0.0000	0.0000	0.0000	0.0000	0.0000	0.0000	0.0000	0.0000
Total					**0.0000**	**0.0000**	**0.0000**	**0.0000**	**0.0000**	**0.0000**	**0.0000**	**0.0000**	**0.0000**	**0.0000**	**0.0000**	**0.0000**

3.29 Year 27 - 2046

Unmitigated Construction On-Site

	ROG	NOx	CO	SO2	Fugitive PM10	Exhaust PM10	PM10 Total	Fugitive PM2.5	Exhaust PM2.5	PM2.5 Total	Bio- CO2	NBio- CO2	Total CO2	CH4	N2O	CO2e
Category	tons/yr										MT/yr					
Off-Road	0.2341	0.6068	2.0984	0.0105		0.0192	0.0192		0.0192	0.0192	0.0000	1,082.1772	1,082.1772	0.0182	0.0000	1,082.5589
Total	**0.2341**	**0.6068**	**2.0984**	**0.0105**		**0.0192**	**0.0192**		**0.0192**	**0.0192**	**0.0000**	**1,082.1772**	**1,082.1772**	**0.0182**	**0.0000**	**1,082.5589**

3.29 Year 27 - 2046

Unmitigated Construction Off-Site

	ROG	NOx	CO	SO2	Fugitive PM10	Exhaust PM10	PM10 Total	Fugitive PM2.5	Exhaust PM2.5	PM2.5 Total	Bio- CO2	NBio- CO2	Total CO2	CH4	N2O	CO2e
Category	tons/yr										MT/yr					
Hauling					0.0000	0.0000	0.0000	0.0000	0.0000	0.0000	0.0000	0.0000	0.0000	0.0000	0.0000	0.0000
Vendor					0.0000	0.0000	0.0000	0.0000	0.0000	0.0000	0.0000	0.0000	0.0000	0.0000	0.0000	0.0000
Worker					0.0000	0.0000	0.0000	0.0000	0.0000	0.0000	0.0000	0.0000	0.0000	0.0000	0.0000	0.0000
Total					**0.0000**	**0.0000**	**0.0000**	**0.0000**	**0.0000**	**0.0000**	**0.0000**	**0.0000**	**0.0000**	**0.0000**	**0.0000**	**0.0000**

Mitigated Construction On-Site

	ROG	NOx	CO	SO2	Fugitive PM10	Exhaust PM10	PM10 Total	Fugitive PM2.5	Exhaust PM2.5	PM2.5 Total	Bio- CO2	NBio- CO2	Total CO2	CH4	N2O	CO2e
Category	tons/yr										MT/yr					
Off-Road	0.1177	0.5601	4.8647	0.0105		0.0166	0.0166		0.0166	0.0166	0.0000	1,082.1759	1,082.1759	0.0182	0.0000	1,082.5576
Total	**0.1177**	**0.5601**	**4.8647**	**0.0105**		**0.0166**	**0.0166**		**0.0166**	**0.0166**	**0.0000**	**1,082.1759**	**1,082.1759**	**0.0182**	**0.0000**	**1,082.5576**

3.29 Year 27 - 2046

Mitigated Construction Off-Site

	ROG	NOx	CO	SO2	Fugitive PM10	Exhaust PM10	PM10 Total	Fugitive PM2.5	Exhaust PM2.5	PM2.5 Total	Bio- CO2	NBio- CO2	Total CO2	CH4	N2O	CO2e
Category	tons/yr										MT/yr					
Hauling					0.0000	0.0000	0.0000	0.0000	0.0000	0.0000	0.0000	0.0000	0.0000	0.0000	0.0000	0.0000
Vendor					0.0000	0.0000	0.0000	0.0000	0.0000	0.0000	0.0000	0.0000	0.0000	0.0000	0.0000	0.0000
Worker					0.0000	0.0000	0.0000	0.0000	0.0000	0.0000	0.0000	0.0000	0.0000	0.0000	0.0000	0.0000
Total					**0.0000**	**0.0000**	**0.0000**	**0.0000**	**0.0000**	**0.0000**	**0.0000**	**0.0000**	**0.0000**	**0.0000**	**0.0000**	**0.0000**

3.30 Year 28 - 2047

Unmitigated Construction On-Site

	ROG	NOx	CO	SO2	Fugitive PM10	Exhaust PM10	PM10 Total	Fugitive PM2.5	Exhaust PM2.5	PM2.5 Total	Bio- CO2	NBio- CO2	Total CO2	CH4	N2O	CO2e
Category	tons/yr										MT/yr					
Off-Road	0.2341	0.6068	2.0984	0.0105		0.0192	0.0192		0.0192	0.0192	0.0000	1,082.1772	1,082.1772	0.0182	0.0000	1,082.5589
Total	**0.2341**	**0.6068**	**2.0984**	**0.0105**		**0.0192**	**0.0192**		**0.0192**	**0.0192**	**0.0000**	**1,082.1772**	**1,082.1772**	**0.0182**	**0.0000**	**1,082.5589**

3.30 Year 28 - 2047

Unmitigated Construction Off-Site

	ROG	NOx	CO	SO2	Fugitive PM10	Exhaust PM10	PM10 Total	Fugitive PM2.5	Exhaust PM2.5	PM2.5 Total	Bio- CO2	NBio- CO2	Total CO2	CH4	N2O	CO2e
Category	tons/yr										MT/yr					
Hauling					0.0000	0.0000	0.0000	0.0000	0.0000	0.0000	0.0000	0.0000	0.0000	0.0000	0.0000	0.0000
Vendor					0.0000	0.0000	0.0000	0.0000	0.0000	0.0000	0.0000	0.0000	0.0000	0.0000	0.0000	0.0000
Worker					0.0000	0.0000	0.0000	0.0000	0.0000	0.0000	0.0000	0.0000	0.0000	0.0000	0.0000	0.0000
Total					**0.0000**	**0.0000**	**0.0000**	**0.0000**	**0.0000**	**0.0000**	**0.0000**	**0.0000**	**0.0000**	**0.0000**	**0.0000**	**0.0000**

Mitigated Construction On-Site

	ROG	NOx	CO	SO2	Fugitive PM10	Exhaust PM10	PM10 Total	Fugitive PM2.5	Exhaust PM2.5	PM2.5 Total	Bio- CO2	NBio- CO2	Total CO2	CH4	N2O	CO2e
Category	tons/yr										MT/yr					
Off-Road	0.1177	0.5601	4.8647	0.0105		0.0166	0.0166		0.0166	0.0166	0.0000	1,082.1759	1,082.1759	0.0182	0.0000	1,082.5576
Total	**0.1177**	**0.5601**	**4.8647**	**0.0105**		**0.0166**	**0.0166**		**0.0166**	**0.0166**	**0.0000**	**1,082.1759**	**1,082.1759**	**0.0182**	**0.0000**	**1,082.5576**

3.30 Year 28 - 2047

Mitigated Construction Off-Site

	ROG	NOx	CO	SO2	Fugitive PM10	Exhaust PM10	PM10 Total	Fugitive PM2.5	Exhaust PM2.5	PM2.5 Total	Bio- CO2	NBio- CO2	Total CO2	CH4	N2O	CO2e
Category	tons/yr										MT/yr					
Hauling					0.0000	0.0000	0.0000	0.0000	0.0000	0.0000	0.0000	0.0000	0.0000	0.0000	0.0000	0.0000
Vendor					0.0000	0.0000	0.0000	0.0000	0.0000	0.0000	0.0000	0.0000	0.0000	0.0000	0.0000	0.0000
Worker					0.0000	0.0000	0.0000	0.0000	0.0000	0.0000	0.0000	0.0000	0.0000	0.0000	0.0000	0.0000
Total					**0.0000**	**0.0000**	**0.0000**	**0.0000**	**0.0000**	**0.0000**	**0.0000**	**0.0000**	**0.0000**	**0.0000**	**0.0000**	**0.0000**

3.31 Year 29 - 2048

Unmitigated Construction On-Site

	ROG	NOx	CO	SO2	Fugitive PM10	Exhaust PM10	PM10 Total	Fugitive PM2.5	Exhaust PM2.5	PM2.5 Total	Bio- CO2	NBio- CO2	Total CO2	CH4	N2O	CO2e
Category	tons/yr										MT/yr					
Off-Road	0.2341	0.6068	2.0984	0.0105		0.0192	0.0192		0.0192	0.0192	0.0000	1,082.1772	1,082.1772	0.0182	0.0000	1,082.5589
Total	**0.2341**	**0.6068**	**2.0984**	**0.0105**		**0.0192**	**0.0192**		**0.0192**	**0.0192**	**0.0000**	**1,082.1772**	**1,082.1772**	**0.0182**	**0.0000**	**1,082.5589**

3.31 Year 29 - 2048

Unmitigated Construction Off-Site

	ROG	NOx	CO	SO2	Fugitive PM10	Exhaust PM10	PM10 Total	Fugitive PM2.5	Exhaust PM2.5	PM2.5 Total	Bio- CO2	NBio- CO2	Total CO2	CH4	N2O	CO2e
Category	tons/yr										MT/yr					
Hauling					0.0000	0.0000	0.0000	0.0000	0.0000	0.0000	0.0000	0.0000	0.0000	0.0000	0.0000	0.0000
Vendor					0.0000	0.0000	0.0000	0.0000	0.0000	0.0000	0.0000	0.0000	0.0000	0.0000	0.0000	0.0000
Worker					0.0000	0.0000	0.0000	0.0000	0.0000	0.0000	0.0000	0.0000	0.0000	0.0000	0.0000	0.0000
Total					**0.0000**	**0.0000**	**0.0000**	**0.0000**	**0.0000**	**0.0000**	**0.0000**	**0.0000**	**0.0000**	**0.0000**	**0.0000**	**0.0000**

Mitigated Construction On-Site

	ROG	NOx	CO	SO2	Fugitive PM10	Exhaust PM10	PM10 Total	Fugitive PM2.5	Exhaust PM2.5	PM2.5 Total	Bio- CO2	NBio- CO2	Total CO2	CH4	N2O	CO2e
Category	tons/yr										MT/yr					
Off-Road	0.1177	0.5601	4.8647	0.0105		0.0166	0.0166		0.0166	0.0166	0.0000	1,082.1759	1,082.1759	0.0182	0.0000	1,082.5576
Total	**0.1177**	**0.5601**	**4.8647**	**0.0105**		**0.0166**	**0.0166**		**0.0166**	**0.0166**	**0.0000**	**1,082.1759**	**1,082.1759**	**0.0182**	**0.0000**	**1,082.5576**

3.31 Year 29 - 2048

Mitigated Construction Off-Site

	ROG	NOx	CO	SO2	Fugitive PM10	Exhaust PM10	PM10 Total	Fugitive PM2.5	Exhaust PM2.5	PM2.5 Total	Bio- CO2	NBio- CO2	Total CO2	CH4	N2O	CO2e
Category	tons/yr										MT/yr					
Hauling					0.0000	0.0000	0.0000	0.0000	0.0000	0.0000	0.0000	0.0000	0.0000	0.0000	0.0000	0.0000
Vendor					0.0000	0.0000	0.0000	0.0000	0.0000	0.0000	0.0000	0.0000	0.0000	0.0000	0.0000	0.0000
Worker					0.0000	0.0000	0.0000	0.0000	0.0000	0.0000	0.0000	0.0000	0.0000	0.0000	0.0000	0.0000
Total					**0.0000**	**0.0000**	**0.0000**	**0.0000**	**0.0000**	**0.0000**	**0.0000**	**0.0000**	**0.0000**	**0.0000**	**0.0000**	**0.0000**

3.32 Year 30 - 2049

Unmitigated Construction On-Site

	ROG	NOx	CO	SO2	Fugitive PM10	Exhaust PM10	PM10 Total	Fugitive PM2.5	Exhaust PM2.5	PM2.5 Total	Bio- CO2	NBio- CO2	Total CO2	CH4	N2O	CO2e
Category	tons/yr										MT/yr					
Off-Road	0.2311	0.5991	2.0718	0.0104		0.0190	0.0190		0.0190	0.0190	0.0000	1,068.4787	1,068.4787	0.0180	0.0000	1,068.8556
Total	**0.2311**	**0.5991**	**2.0718**	**0.0104**		**0.0190**	**0.0190**		**0.0190**	**0.0190**	**0.0000**	**1,068.4787**	**1,068.4787**	**0.0180**	**0.0000**	**1,068.8556**

3.32 Year 30 - 2049

Unmitigated Construction Off-Site

	ROG	NOx	CO	SO2	Fugitive PM10	Exhaust PM10	PM10 Total	Fugitive PM2.5	Exhaust PM2.5	PM2.5 Total	Bio- CO2	NBio- CO2	Total CO2	CH4	N2O	CO2e
Category	tons/yr										MT/yr					
Hauling					0.0000	0.0000	0.0000	0.0000	0.0000	0.0000	0.0000	0.0000	0.0000	0.0000	0.0000	0.0000
Vendor					0.0000	0.0000	0.0000	0.0000	0.0000	0.0000	0.0000	0.0000	0.0000	0.0000	0.0000	0.0000
Worker					0.0000	0.0000	0.0000	0.0000	0.0000	0.0000	0.0000	0.0000	0.0000	0.0000	0.0000	0.0000
Total					**0.0000**	**0.0000**	**0.0000**	**0.0000**	**0.0000**	**0.0000**	**0.0000**	**0.0000**	**0.0000**	**0.0000**	**0.0000**	**0.0000**

Mitigated Construction On-Site

	ROG	NOx	CO	SO2	Fugitive PM10	Exhaust PM10	PM10 Total	Fugitive PM2.5	Exhaust PM2.5	PM2.5 Total	Bio- CO2	NBio- CO2	Total CO2	CH4	N2O	CO2e
Category	tons/yr										MT/yr					
Off-Road	0.1163	0.5530	4.8031	0.0104		0.0164	0.0164		0.0164	0.0164	0.0000	1,068.4774	1,068.4774	0.0180	0.0000	1,068.8544
Total	**0.1163**	**0.5530**	**4.8031**	**0.0104**		**0.0164**	**0.0164**		**0.0164**	**0.0164**	**0.0000**	**1,068.4774**	**1,068.4774**	**0.0180**	**0.0000**	**1,068.8544**

3.32 Year 30 - 2049

Mitigated Construction Off-Site

	ROG	NOx	CO	SO2	Fugitive PM10	Exhaust PM10	PM10 Total	Fugitive PM2.5	Exhaust PM2.5	PM2.5 Total	Bio- CO2	NBio- CO2	Total CO2	CH4	N2O	CO2e
Category	tons/yr										MT/yr					
Hauling					0.0000	0.0000	0.0000	0.0000	0.0000	0.0000	0.0000	0.0000	0.0000	0.0000	0.0000	0.0000
Vendor					0.0000	0.0000	0.0000	0.0000	0.0000	0.0000	0.0000	0.0000	0.0000	0.0000	0.0000	0.0000
Worker					0.0000	0.0000	0.0000	0.0000	0.0000	0.0000	0.0000	0.0000	0.0000	0.0000	0.0000	0.0000
Total					**0.0000**	**0.0000**	**0.0000**	**0.0000**	**0.0000**	**0.0000**	**0.0000**	**0.0000**	**0.0000**	**0.0000**	**0.0000**	**0.0000**

4.0 Operational Detail - Mobile

4.1 Mitigation Measures Mobile

	ROG	NOx	CO	SO2	Fugitive PM10	Exhaust PM10	PM10 Total	Fugitive PM2.5	Exhaust PM2.5	PM2.5 Total	Bio- CO2	NBio- CO2	Total CO2	CH4	N2O	CO2e
Category	tons/yr										MT/yr					
Mitigated	0.0000	0.0000	0.0000	0.0000	0.0000	0.0000	0.0000	0.0000	0.0000	0.0000	0.0000	0.0000	0.0000	0.0000	0.0000	0.0000
Unmitigated	0.0000	0.0000	0.0000	0.0000	0.0000	0.0000	0.0000	0.0000	0.0000	0.0000	0.0000	0.0000	0.0000	0.0000	0.0000	0.0000

4.2 Trip Summary Information

	Average Daily Trip Rate			Unmitigated	Mitigated
Land Use	Weekday	Saturday	Sunday	Annual VMT	Annual VMT
User Defined Industrial	0.00	0.00	0.00		
Total	0.00	0.00	0.00		

4.3 Trip Type Information

	Miles			Trip %			Trip Purpose %		
Land Use	H-W or C-W	H-S or C-C	H-O or C-NW	H-W or C-W	H-S or C-C	H-O or C-NW	Primary	Diverted	Pass-by
User Defined Industrial	8.80	4.60	4.60	0.00	0.00	0.00	0	0	0

LDA	LDT1	LDT2	MDV	LHD1	LHD2	MHD	HHD	OBUS	UBUS	MCY	SBUS	MH
0.491782	0.035344	0.208299	0.151084	0.049421	0.007284	0.022101	0.017711	0.002208	0.002109	0.008228	0.001403	0.003026

4.4 Fleet Mix

5.0 Energy Detail

Historical Energy Use: N

5.1 Mitigation Measures Energy

	ROG	NOx	CO	SO2	Fugitive PM10	Exhaust PM10	PM10 Total	Fugitive PM2.5	Exhaust PM2.5	PM2.5 Total	Bio- CO2	NBio- CO2	Total CO2	CH4	N2O	CO2e
Category	tons/yr										MT/yr					
Electricity Mitigated						0.0000	0.0000		0.0000	0.0000	0.0000	0.0000	0.0000	0.0000	0.0000	0.0000
Electricity Unmitigated						0.0000	0.0000		0.0000	0.0000	0.0000	0.0000	0.0000	0.0000	0.0000	0.0000
NaturalGas Mitigated	0.0000	0.0000	0.0000	0.0000		0.0000	0.0000		0.0000	0.0000	0.0000	0.0000	0.0000	0.0000	0.0000	0.0000
NaturalGas Unmitigated	0.0000	0.0000	0.0000	0.0000		0.0000	0.0000		0.0000	0.0000	0.0000	0.0000	0.0000	0.0000	0.0000	0.0000

5.2 Energy by Land Use - NaturalGas

Unmitigated

	NaturalGas Use	ROG	NOx	CO	SO2	Fugitive PM10	Exhaust PM10	PM10 Total	Fugitive PM2.5	Exhaust PM2.5	PM2.5 Total	Bio- CO2	NBio- CO2	Total CO2	CH4	N2O	CO2e
Land Use	kBTU/yr	tons/yr										MT/yr					
User Defined Industrial	0	0.0000	0.0000	0.0000	0.0000		0.0000	0.0000		0.0000	0.0000	0.0000	0.0000	0.0000	0.0000	0.0000	0.0000
Total		**0.0000**	**0.0000**	**0.0000**	**0.0000**		**0.0000**	**0.0000**		**0.0000**	**0.0000**	**0.0000**	**0.0000**	**0.0000**	**0.0000**	**0.0000**	**0.0000**

5.2 Energy by Land Use - NaturalGas

Mitigated

	NaturalGas Use	ROG	NOx	CO	SO2	Fugitive PM10	Exhaust PM10	PM10 Total	Fugitive PM2.5	Exhaust PM2.5	PM2.5 Total	Bio- CO2	NBio- CO2	Total CO2	CH4	N2O	CO2e
Land Use	kBTU/yr	tons/yr										MT/yr					
User Defined Industrial	0	0.0000	0.0000	0.0000	0.0000		0.0000	0.0000		0.0000	0.0000	0.0000	0.0000	0.0000	0.0000	0.0000	0.0000
Total		**0.0000**	**0.0000**	**0.0000**	**0.0000**		**0.0000**	**0.0000**		**0.0000**	**0.0000**	**0.0000**	**0.0000**	**0.0000**	**0.0000**	**0.0000**	**0.0000**

5.3 Energy by Land Use - Electricity

Unmitigated

	Electricity Use	Total CO2	CH4	N2O	CO2e
Land Use	kWh/yr	MT/yr			
User Defined Industrial	0	0.0000	0.0000	0.0000	0.0000
Total		**0.0000**	**0.0000**	**0.0000**	**0.0000**

5.3 Energy by Land Use - Electricity

Mitigated

	Electricity Use	Total CO2	CH4	N2O	CO2e
Land Use	kWh/yr	MT/yr			
User Defined Industrial	0	0.0000	0.0000	0.0000	0.0000
Total		**0.0000**	**0.0000**	**0.0000**	**0.0000**

6.0 Area Detail

6.1 Mitigation Measures Area

	ROG	NOx	CO	SO2	Fugitive PM10	Exhaust PM10	PM10 Total	Fugitive PM2.5	Exhaust PM2.5	PM2.5 Total	Bio- CO2	NBio- CO2	Total CO2	CH4	N2O	CO2e
Category	tons/yr										MT/yr					
Mitigated	0.0000					0.0000	0.0000		0.0000	0.0000	0.0000	0.0000	0.0000	0.0000	0.0000	0.0000
Unmitigated	0.0000					0.0000	0.0000		0.0000	0.0000	0.0000	0.0000	0.0000	0.0000	0.0000	0.0000

6.2 Area by SubCategory

Unmitigated

	ROG	NOx	CO	SO2	Fugitive PM10	Exhaust PM10	PM10 Total	Fugitive PM2.5	Exhaust PM2.5	PM2.5 Total	Bio- CO2	NBio- CO2	Total CO2	CH4	N2O	CO2e
SubCategory	tons/yr										MT/yr					
Architectural Coating	0.0000					0.0000	0.0000		0.0000	0.0000	0.0000	0.0000	0.0000	0.0000	0.0000	0.0000
Total	**0.0000**					**0.0000**	**0.0000**		**0.0000**	**0.0000**	**0.0000**	**0.0000**	**0.0000**	**0.0000**	**0.0000**	**0.0000**

Mitigated

	ROG	NOx	CO	SO2	Fugitive PM10	Exhaust PM10	PM10 Total	Fugitive PM2.5	Exhaust PM2.5	PM2.5 Total	Bio- CO2	NBio- CO2	Total CO2	CH4	N2O	CO2e
SubCategory	tons/yr										MT/yr					
Architectural Coating	0.0000					0.0000	0.0000		0.0000	0.0000	0.0000	0.0000	0.0000	0.0000	0.0000	0.0000
Total	**0.0000**					**0.0000**	**0.0000**		**0.0000**	**0.0000**	**0.0000**	**0.0000**	**0.0000**	**0.0000**	**0.0000**	**0.0000**

7.0 Water Detail

7.1 Mitigation Measures Water

	Total CO2	CH4	N2O	CO2e
Category	MT/yr			
Mitigated	0.0000	0.0000	0.0000	0.0000
Unmitigated	0.0000	0.0000	0.0000	0.0000

7.2 Water by Land Use

Unmitigated

	Indoor/Outdoor Use	Total CO2	CH4	N2O	CO2e
Land Use	Mgal	MT/yr			
User Defined Industrial	0 / 0	0.0000	0.0000	0.0000	0.0000
Total		**0.0000**	**0.0000**	**0.0000**	**0.0000**

7.2 Water by Land Use

Mitigated

	Indoor/Outdoor Use	Total CO2	CH4	N2O	CO2e
Land Use	Mgal	MT/yr			
User Defined Industrial	0 / 0	0.0000	0.0000	0.0000	0.0000
Total		**0.0000**	**0.0000**	**0.0000**	**0.0000**

8.0 Waste Detail

8.1 Mitigation Measures Waste

Category/Year

	Total CO2	CH4	N2O	CO2e
	MT/yr			
Mitigated	0.0000	0.0000	0.0000	0.0000
Unmitigated	0.0000	0.0000	0.0000	0.0000

8.2 Waste by Land Use

Unmitigated

	Waste Disposed	Total CO2	CH4	N2O	CO2e
Land Use	tons	MT/yr			
User Defined Industrial	0	0.0000	0.0000	0.0000	0.0000
Total		**0.0000**	**0.0000**	**0.0000**	**0.0000**

Mitigated

	Waste Disposed	Total CO2	CH4	N2O	CO2e
Land Use	tons	MT/yr			
User Defined Industrial	0	0.0000	0.0000	0.0000	0.0000
Total		**0.0000**	**0.0000**	**0.0000**	**0.0000**

9.0 Operational Offroad

Equipment Type	Number	Hours/Day	Days/Year	Horse Power	Load Factor	Fuel Type

AERA - Santa Barbara - Cat Canyon Drilling Unpaved Road Travel Emissions

Santa Barbara-North of Santa Ynez County, Annual

1.0 Project Characteristics

1.1 Land Usage

Land Uses	Size	Metric	Lot Acreage	Floor Surface Area	Population
User Defined Industrial	2,100.00	User Defined Unit	2,100.00	0.00	0

1.2 Other Project Characteristics

Urbanization	Rural	**Wind Speed (m/s)**	3.1	**Precipitation Freq (Days)**	37
Climate Zone	4			**Operational Year**	2035
Utility Company	Pacific Gas & Electric Company				
CO2 Intensity (lb/MWhr)	641.35	**CH4 Intensity (lb/MWhr)**	0.029	**N2O Intensity (lb/MWhr)**	0.006

1.3 User Entered Comments & Non-Default Data

Project Characteristics -

Land Use - The project will be located in the East Cat Canyon oil field on approximately 2,100 acres.

Construction Phase - Anticipated Construction Schedule Provided by the Project Applicant.

Off-road Equipment - Units and Hours/day provided by Project Applicant. HP were adjusted whenever data was available for the size of the equipment provided by the applicant.

Off-road Equipment - Units and Hours/day provided by Project Applicant. HP were adjusted whenever data was available for the size of the equipment provided by the applicant.

Off-road Equipment - Units and Hours/day provided by Project Applicant. HP were adjusted whenever data was available for the size of the equipment provided by the applicant.

Off-road Equipment - Units and Hours/day provided by Project Applicant. HP were adjusted whenever data was available for the size of the equipment provided by the applicant.

Off-road Equipment - Units and Hours/day provided by Project Applicant. HP were adjusted whenever data was available for the size of the equipment provided by the applicant.

Off-road Equipment - Units and Hours/day provided by Project Applicant. HP were adjusted whenever data was available for the size of the equipment provided by the applicant.

Off-road Equipment - Units and Hours/day provided by Project Applicant. HP were adjusted whenever data was available for the size of the equipment provided by the applicant.

Off-road Equipment - Units and Hours/day provided by Project Applicant. HP were adjusted whenever data was available for the size of the equipment provided by the applicant.

Off-road Equipment - Units and Hours/day provided by Project Applicant. HP were adjusted whenever data was available for the size of the equipment provided by the applicant.

Off-road Equipment - Units and Hours/day provided by Project Applicant. HP were adjusted whenever data was available for the size of the equipment provided by the applicant.

Off-road Equipment - Units and Hours/day provided by Project Applicant. HP were adjusted whenever data was available for the size of the equipment provided by the applicant.

Off-road Equipment - Units and Hours/day provided by Project Applicant. HP were adjusted whenever data was available for the size of the equipment provided by the applicant.

Off-road Equipment - Units and Hours/day provided by Project Applicant. HP were adjusted whenever data was available for the size of the equipment provided by the applicant.

Off-road Equipment - Units and Hours/day provided by Project Applicant. HP were adjusted whenever data was available for the size of the equipment provided by the applicant.

Off-road Equipment - Units and Hours/day provided by Project Applicant. HP were adjusted whenever data was available for the size of the equipment provided by the applicant.

Off-road Equipment - Units and Hours/day provided by Project Applicant. HP were adjusted whenever data was available for the size of the equipment provided by the applicant.

Off-road Equipment - Units and Hours/day provided by Project Applicant. HP were adjusted whenever data was available for the size of the equipment provided by the applicant.

Off-road Equipment - Units and Hours/day provided by Project Applicant. HP were adjusted whenever data was available for the size of the equipment provided by the applicant.

Off-road Equipment - Units and Hours/day provided by Project Applicant. HP were adjusted whenever data was available for the size of the equipment provided by the applicant.

Off-road Equipment - Units and Hours/day provided by Project Applicant. HP were adjusted whenever data was available for the size of the equipment provided by the applicant.

Off-road Equipment - Units and Hours/day provided by Project Applicant. HP were adjusted whenever data was available for the size of the equipment provided by the applicant.

Off-road Equipment - Units and Hours/day provided by Project Applicant. HP were adjusted whenever data was available for the size of the equipment provided by the applicant.

Off-road Equipment - Units and Hours/day provided by Project Applicant. HP were adjusted whenever data was available for the size of the equipment provided by the applicant.

Off-road Equipment - Units and Hours/day provided by Project Applicant. HP were adjusted whenever data was available for the size of the equipment provided

by the applicant.
Off-road Equipment - Units and Hours/day provided by Project Applicant. HP were adjusted whenever data was available for the size of the equipment provided by the applicant.

Off-road Equipment - Units and Hours/day provided by Project Applicant. HP were adjusted whenever data was available for the size of the equipment provided by the applicant.

Off-road Equipment - Units and Hours/day provided by Project Applicant. HP were adjusted whenever data was available for the size of the equipment provided by the applicant.

Off-road Equipment - Units and Hours/day provided by Project Applicant. HP were adjusted whenever data was available for the size of the equipment provided by the applicant.

Off-road Equipment - Units and Hours/day provided by Project Applicant. HP were adjusted whenever data was available for the size of the equipment provided by the applicant.

Off-road Equipment - Units and Hours/day provided by Project Applicant. HP were adjusted whenever data was available for the size of the equipment provided by the applicant.

Trips and VMT - Applicant estimations for worker and vendor trips per day for drilling and hookup activities with an average of 0.6 miles of unpaved travel per trip.

On-road Fugitive Dust - This is a unpaved road travel only run so % Paved was set to zero.

Vehicle Trips - Construction Run Only

Vechicle Emission Factors -

Vechicle Emission Factors -

Vechicle Emission Factors -

Road Dust -

Consumer Products - Construction Run Only

Landscape Equipment - Construction Run Only

Construction Off-road Equipment Mitigation -

Area Coating -

Table Name	Column Name	Default Value	New Value
tblAreaCoating	ReapplicationRatePercent	10	0
tblConstructionPhase	NumDays	155,000.00	52.00
tblConstructionPhase	NumDays	155,000.00	52.00
tblConstructionPhase	NumDays	155,000.00	105.00
tblConstructionPhase	NumDays	155,000.00	158.00
tblConstructionPhase	NumDays	155,000.00	106.00

tblConstructionPhase	NumDays	155,000.00	130.00
tblConstructionPhase	NumDays	155,000.00	52.00
tblConstructionPhase	NumDays	155,000.00	131.00
tblConstructionPhase	NumDays	155,000.00	287.00
tblConstructionPhase	NumDays	155,000.00	53.00
tblConstructionPhase	NumDays	155,000.00	53.00
tblConstructionPhase	NumDays	155,000.00	313.00
tblConstructionPhase	NumDays	155,000.00	52.00
tblConstructionPhase	NumDays	155,000.00	51.00
tblConstructionPhase	NumDays	155,000.00	52.00
tblConstructionPhase	NumDays	155,000.00	52.00
tblConstructionPhase	NumDays	155,000.00	53.00
tblConstructionPhase	NumDays	155,000.00	53.00
tblConstructionPhase	NumDays	155,000.00	52.00
tblConstructionPhase	NumDays	155,000.00	52.00
tblConstructionPhase	NumDays	155,000.00	52.00
tblConstructionPhase	NumDays	155,000.00	52.00
tblConstructionPhase	NumDays	155,000.00	26.00
tblConstructionPhase	NumDays	155,000.00	53.00
tblConstructionPhase	NumDays	155,000.00	52.00
tblConstructionPhase	NumDays	155,000.00	26.00
tblConstructionPhase	NumDays	155,000.00	26.00
tblConstructionPhase	NumDays	155,000.00	314.00
tblConstructionPhase	NumDays	155,000.00	53.00
tblConstructionPhase	NumDays	155,000.00	132.00
tblConstructionPhase	NumDays	155,000.00	52.00
tblConstructionPhase	NumDaysWeek	5.00	6.00
tblConstructionPhase	NumDaysWeek	5.00	6.00

tblConstructionPhase	NumDaysWeek	5.00	6.00
tblConstructionPhase	NumDaysWeek	5.00	6.00
tblConstructionPhase	NumDaysWeek	5.00	6.00
tblConstructionPhase	NumDaysWeek	5.00	6.00
tblConstructionPhase	NumDaysWeek	5.00	6.00
tblConstructionPhase	NumDaysWeek	5.00	6.00
tblConstructionPhase	NumDaysWeek	5.00	6.00
tblConstructionPhase	NumDaysWeek	5.00	6.00
tblConstructionPhase	NumDaysWeek	5.00	6.00
tblConstructionPhase	NumDaysWeek	5.00	6.00
tblConstructionPhase	NumDaysWeek	5.00	6.00
tblConstructionPhase	NumDaysWeek	5.00	6.00
tblConstructionPhase	NumDaysWeek	5.00	6.00
tblConstructionPhase	NumDaysWeek	5.00	6.00
tblConstructionPhase	NumDaysWeek	5.00	6.00
tblConstructionPhase	NumDaysWeek	5.00	6.00
tblConstructionPhase	NumDaysWeek	5.00	6.00
tblConstructionPhase	NumDaysWeek	5.00	6.00
tblConstructionPhase	NumDaysWeek	5.00	6.00
tblConstructionPhase	NumDaysWeek	5.00	6.00
tblConstructionPhase	NumDaysWeek	5.00	6.00
tblConstructionPhase	NumDaysWeek	5.00	6.00
tblConstructionPhase	NumDaysWeek	5.00	6.00
tblConstructionPhase	NumDaysWeek	5.00	6.00
tblConstructionPhase	NumDaysWeek	5.00	6.00
tblConstructionPhase	NumDaysWeek	5.00	6.00

tblConstructionPhase	NumDaysWeek	5.00	6.00
tblConstructionPhase	PhaseEndDate	12/30/2027	10/31/2028
tblConstructionPhase	PhaseEndDate	3/2/2029	10/31/2029
tblConstructionPhase	PhaseEndDate	5/3/2030	10/31/2030
tblConstructionPhase	PhaseEndDate	3/4/2031	10/31/2031
tblConstructionPhase	PhaseEndDate	3/31/2032	10/29/2032
tblConstructionPhase	PhaseEndDate	12/29/2032	10/31/2033
tblConstructionPhase	PhaseEndDate	4/1/2034	10/31/2034
tblConstructionPhase	PhaseEndDate	10/1/2035	11/30/2035
tblConstructionPhase	PhaseEndDate	1/31/2036	10/31/2036
tblConstructionPhase	PhaseEndDate	1/1/2037	10/31/2037
tblConstructionPhase	PhaseEndDate	10/31/2019	12/31/2019
tblConstructionPhase	PhaseEndDate	12/31/2037	10/30/2038
tblConstructionPhase	PhaseEndDate	12/29/2038	10/29/2039
tblConstructionPhase	PhaseEndDate	12/29/2039	10/31/2040
tblConstructionPhase	PhaseEndDate	12/31/2040	10/31/2041
tblConstructionPhase	PhaseEndDate	1/1/2042	10/31/2042
tblConstructionPhase	PhaseEndDate	1/1/2043	10/31/2043
tblConstructionPhase	PhaseEndDate	12/31/2043	10/31/2044
tblConstructionPhase	PhaseEndDate	12/30/2044	10/31/2045
tblConstructionPhase	PhaseEndDate	12/30/2045	10/31/2046
tblConstructionPhase	PhaseEndDate	12/31/2046	10/31/2047
tblConstructionPhase	PhaseEndDate	1/30/2020	10/30/2021
tblConstructionPhase	PhaseEndDate	1/1/2048	10/31/2048
tblConstructionPhase	PhaseEndDate	12/31/2048	10/31/2049
tblConstructionPhase	PhaseEndDate	11/30/2021	10/31/2022
tblConstructionPhase	PhaseEndDate	11/30/2022	10/31/2023
tblConstructionPhase	PhaseEndDate	10/31/2024	12/31/2024

tblConstructionPhase	PhaseEndDate	3/3/2025	10/31/2025
tblConstructionPhase	PhaseEndDate	4/3/2026	10/31/2026
tblConstructionPhase	PhaseEndDate	12/31/2026	10/30/2027
tblConstructionPhase	PhaseStartDate	10/31/2027	9/1/2028
tblConstructionPhase	PhaseStartDate	11/1/2028	7/1/2029
tblConstructionPhase	PhaseStartDate	11/1/2029	5/1/2030
tblConstructionPhase	PhaseStartDate	11/1/2030	7/1/2031
tblConstructionPhase	PhaseStartDate	11/1/2031	6/1/2032
tblConstructionPhase	PhaseStartDate	10/30/2032	9/1/2033
tblConstructionPhase	PhaseStartDate	11/1/2033	6/1/2034
tblConstructionPhase	PhaseStartDate	11/1/2034	1/1/2035
tblConstructionPhase	PhaseStartDate	12/1/2035	9/1/2036
tblConstructionPhase	PhaseStartDate	11/1/2036	9/1/2037
tblConstructionPhase	PhaseStartDate	11/1/2018	1/1/2019
tblConstructionPhase	PhaseStartDate	11/1/2037	9/1/2038
tblConstructionPhase	PhaseStartDate	10/31/2038	9/1/2039
tblConstructionPhase	PhaseStartDate	10/30/2039	9/1/2040
tblConstructionPhase	PhaseStartDate	11/1/2040	9/1/2041
tblConstructionPhase	PhaseStartDate	11/1/2041	9/1/2042
tblConstructionPhase	PhaseStartDate	11/1/2042	9/1/2043
tblConstructionPhase	PhaseStartDate	11/1/2043	9/1/2044
tblConstructionPhase	PhaseStartDate	11/1/2044	9/1/2045
tblConstructionPhase	PhaseStartDate	11/1/2045	9/1/2046
tblConstructionPhase	PhaseStartDate	11/1/2046	9/1/2047
tblConstructionPhase	PhaseStartDate	1/1/2020	10/1/2021
tblConstructionPhase	PhaseStartDate	11/1/2047	9/1/2048
tblConstructionPhase	PhaseStartDate	11/1/2048	9/1/2049
tblConstructionPhase	PhaseStartDate	10/31/2021	10/1/2022

tblConstructionPhase	PhaseStartDate	11/1/2022	10/1/2023
tblConstructionPhase	PhaseStartDate	11/1/2023	1/1/2024
tblConstructionPhase	PhaseStartDate	1/1/2025	9/1/2025
tblConstructionPhase	PhaseStartDate	11/1/2025	6/1/2026
tblConstructionPhase	PhaseStartDate	11/1/2026	9/1/2027
tblLandUse	LotAcreage	0.00	2,100.00
tblOnRoadDust	VendorPercentPave	100.00	0.00
tblOnRoadDust	VendorPercentPave	100.00	0.00
tblOnRoadDust	VendorPercentPave	100.00	0.00
tblOnRoadDust	VendorPercentPave	100.00	0.00
tblOnRoadDust	VendorPercentPave	100.00	0.00
tblOnRoadDust	VendorPercentPave	100.00	0.00
tblOnRoadDust	VendorPercentPave	100.00	0.00
tblOnRoadDust	VendorPercentPave	100.00	0.00
tblOnRoadDust	VendorPercentPave	100.00	0.00
tblOnRoadDust	VendorPercentPave	100.00	0.00
tblOnRoadDust	VendorPercentPave	100.00	0.00
tblOnRoadDust	VendorPercentPave	100.00	0.00
tblOnRoadDust	VendorPercentPave	100.00	0.00
tblOnRoadDust	VendorPercentPave	100.00	0.00
tblOnRoadDust	VendorPercentPave	100.00	0.00
tblOnRoadDust	VendorPercentPave	100.00	0.00
tblOnRoadDust	VendorPercentPave	100.00	0.00
tblOnRoadDust	VendorPercentPave	100.00	0.00
tblOnRoadDust	VendorPercentPave	100.00	0.00

tblOnRoadDust	VendorPercentPave	100.00	0.00
tblOnRoadDust	VendorPercentPave	100.00	0.00
tblOnRoadDust	VendorPercentPave	100.00	0.00
tblOnRoadDust	VendorPercentPave	100.00	0.00
tblOnRoadDust	VendorPercentPave	100.00	0.00
tblOnRoadDust	VendorPercentPave	100.00	0.00
tblOnRoadDust	VendorPercentPave	100.00	0.00
tblOnRoadDust	VendorPercentPave	100.00	0.00
tblOnRoadDust	VendorPercentPave	100.00	0.00
tblOnRoadDust	WorkerPercentPave	100.00	0.00
tblOnRoadDust	WorkerPercentPave	100.00	0.00
tblOnRoadDust	WorkerPercentPave	100.00	0.00
tblOnRoadDust	WorkerPercentPave	100.00	0.00
tblOnRoadDust	WorkerPercentPave	100.00	0.00
tblOnRoadDust	WorkerPercentPave	100.00	0.00
tblOnRoadDust	WorkerPercentPave	100.00	0.00
tblOnRoadDust	WorkerPercentPave	100.00	0.00
tblOnRoadDust	WorkerPercentPave	100.00	0.00
tblOnRoadDust	WorkerPercentPave	100.00	0.00
tblOnRoadDust	WorkerPercentPave	100.00	0.00
tblOnRoadDust	WorkerPercentPave	100.00	0.00
tblOnRoadDust	WorkerPercentPave	100.00	0.00
tblOnRoadDust	WorkerPercentPave	100.00	0.00
tblOnRoadDust	WorkerPercentPave	100.00	0.00
tblOnRoadDust	WorkerPercentPave	100.00	0.00
tblOnRoadDust	WorkerPercentPave	100.00	0.00

tblOnRoadDust	WorkerPercentPave	100.00	0.00
tblOnRoadDust	WorkerPercentPave	100.00	0.00
tblOnRoadDust	WorkerPercentPave	100.00	0.00
tblOnRoadDust	WorkerPercentPave	100.00	0.00
tblOnRoadDust	WorkerPercentPave	100.00	0.00
tblOnRoadDust	WorkerPercentPave	100.00	0.00
tblOnRoadDust	WorkerPercentPave	100.00	0.00
tblOnRoadDust	WorkerPercentPave	100.00	0.00
tblOnRoadDust	WorkerPercentPave	100.00	0.00
tblOnRoadDust	WorkerPercentPave	100.00	0.00
tblOnRoadDust	WorkerPercentPave	100.00	0.00
tblOnRoadDust	WorkerPercentPave	100.00	0.00
tblProjectCharacteristics	OperationalYear	2014	2035
tblProjectCharacteristics	UrbanizationLevel	Urban	Rural
tblTripsAndVMT	VendorTripLength	4.60	0.60
tblTripsAndVMT	VendorTripLength	4.60	0.60
tblTripsAndVMT	VendorTripLength	4.60	0.60
tblTripsAndVMT	VendorTripLength	4.60	0.60
tblTripsAndVMT	VendorTripLength	4.60	0.60
tblTripsAndVMT	VendorTripLength	4.60	0.60
tblTripsAndVMT	VendorTripLength	4.60	0.60
tblTripsAndVMT	VendorTripLength	4.60	0.60
tblTripsAndVMT	VendorTripLength	4.60	0.60
tblTripsAndVMT	VendorTripLength	4.60	0.60
tblTripsAndVMT	VendorTripLength	4.60	0.60
tblTripsAndVMT	VendorTripLength	4.60	0.60
tblTripsAndVMT	VendorTripLength	4.60	0.60

tblTripsAndVMT	VendorTripLength	4.60	0.60
tblTripsAndVMT	VendorTripLength	4.60	0.60
tblTripsAndVMT	VendorTripLength	4.60	0.60
tblTripsAndVMT	VendorTripLength	4.60	0.60
tblTripsAndVMT	VendorTripLength	4.60	0.60
tblTripsAndVMT	VendorTripLength	4.60	0.60
tblTripsAndVMT	VendorTripLength	4.60	0.60
tblTripsAndVMT	VendorTripLength	4.60	0.60
tblTripsAndVMT	VendorTripLength	4.60	0.60
tblTripsAndVMT	VendorTripLength	4.60	0.60
tblTripsAndVMT	VendorTripLength	4.60	0.60
tblTripsAndVMT	VendorTripLength	4.60	0.60
tblTripsAndVMT	VendorTripLength	4.60	0.60
tblTripsAndVMT	VendorTripLength	4.60	0.60
tblTripsAndVMT	VendorTripLength	4.60	0.60
tblTripsAndVMT	VendorTripLength	4.60	0.60
tblTripsAndVMT	VendorVehicleClass		HHDT
tblTripsAndVMT	VendorVehicleClass		HHDT
tblTripsAndVMT	VendorVehicleClass		HHDT
tblTripsAndVMT	VendorVehicleClass		HHDT
tblTripsAndVMT	VendorVehicleClass		HHDT
tblTripsAndVMT	VendorVehicleClass		HHDT
tblTripsAndVMT	VendorVehicleClass		HHDT
tblTripsAndVMT	VendorVehicleClass		HHDT
tblTripsAndVMT	VendorVehicleClass		HHDT
tblTripsAndVMT	VendorVehicleClass		HHDT

tblTripsAndVMT	VendorVehicleClass		HHDT
tblTripsAndVMT	VendorVehicleClass		HHDT
tblTripsAndVMT	VendorVehicleClass		HHDT
tblTripsAndVMT	VendorVehicleClass		HHDT
tblTripsAndVMT	VendorVehicleClass		HHDT
tblTripsAndVMT	VendorVehicleClass		HHDT
tblTripsAndVMT	VendorVehicleClass		HHDT
tblTripsAndVMT	VendorVehicleClass		HHDT
tblTripsAndVMT	VendorVehicleClass		HHDT
tblTripsAndVMT	VendorVehicleClass		HHDT
tblTripsAndVMT	VendorVehicleClass		HHDT
tblTripsAndVMT	VendorVehicleClass		HHDT
tblTripsAndVMT	VendorVehicleClass		HHDT
tblTripsAndVMT	VendorVehicleClass		HHDT
tblTripsAndVMT	VendorVehicleClass		HHDT
tblTripsAndVMT	VendorVehicleClass		HHDT
tblTripsAndVMT	VendorVehicleClass		HHDT
tblTripsAndVMT	VendorVehicleClass		HHDT
tblTripsAndVMT	VendorVehicleClass		HHDT
tblTripsAndVMT	WorkerTripLength	12.30	0.60
tblTripsAndVMT	WorkerTripLength	12.30	0.60
tblTripsAndVMT	WorkerTripLength	12.30	0.60
tblTripsAndVMT	WorkerTripLength	12.30	0.60
tblTripsAndVMT	WorkerTripLength	12.30	0.60
tblTripsAndVMT	WorkerTripLength	12.30	0.60
tblTripsAndVMT	WorkerTripLength	12.30	0.60
tblTripsAndVMT	WorkerTripLength	12.30	0.60

tblTripsAndVMT	WorkerTripLength	12.30	0.60
tblTripsAndVMT	WorkerTripLength	12.30	0.60
tblTripsAndVMT	WorkerTripLength	12.30	0.60
tblTripsAndVMT	WorkerTripLength	12.30	0.60
tblTripsAndVMT	WorkerTripLength	12.30	0.60
tblTripsAndVMT	WorkerTripLength	12.30	0.60
tblTripsAndVMT	WorkerTripLength	12.30	0.60
tblTripsAndVMT	WorkerTripLength	12.30	0.60
tblTripsAndVMT	WorkerTripLength	12.30	0.60
tblTripsAndVMT	WorkerTripLength	12.30	0.60
tblTripsAndVMT	WorkerTripLength	12.30	0.60
tblTripsAndVMT	WorkerTripLength	12.30	0.60
tblTripsAndVMT	WorkerTripLength	12.30	0.60
tblTripsAndVMT	WorkerTripLength	12.30	0.60
tblTripsAndVMT	WorkerTripLength	12.30	0.60
tblTripsAndVMT	WorkerTripLength	12.30	0.60
tblTripsAndVMT	WorkerTripLength	12.30	0.60
tblTripsAndVMT	WorkerTripLength	12.30	0.60
tblTripsAndVMT	WorkerTripLength	12.30	0.60
tblTripsAndVMT	WorkerTripLength	12.30	0.60
tblTripsAndVMT	WorkerTripLength	12.30	0.60
tblTripsAndVMT	WorkerVehicleClass		LD_Mix
tblTripsAndVMT	WorkerVehicleClass		LD_Mix
tblTripsAndVMT	WorkerVehicleClass		LD_Mix
tblTripsAndVMT	WorkerVehicleClass		LD_Mix
tblTripsAndVMT	WorkerVehicleClass		LD_Mix

tblTripsAndVMT	WorkerVehicleClass		LD_Mix
tblTripsAndVMT	WorkerVehicleClass		LD_Mix
tblTripsAndVMT	WorkerVehicleClass		LD_Mix
tblTripsAndVMT	WorkerVehicleClass		LD_Mix
tblTripsAndVMT	WorkerVehicleClass		LD_Mix
tblTripsAndVMT	WorkerVehicleClass		LD_Mix
tblTripsAndVMT	WorkerVehicleClass		LD_Mix
tblTripsAndVMT	WorkerVehicleClass		LD_Mix
tblTripsAndVMT	WorkerVehicleClass		LD_Mix
tblTripsAndVMT	WorkerVehicleClass		LD_Mix
tblTripsAndVMT	WorkerVehicleClass		LD_Mix
tblTripsAndVMT	WorkerVehicleClass		LD_Mix
tblTripsAndVMT	WorkerVehicleClass		LD_Mix
tblTripsAndVMT	WorkerVehicleClass		LD_Mix
tblTripsAndVMT	WorkerVehicleClass		LD_Mix
tblTripsAndVMT	WorkerVehicleClass		LD_Mix
tblTripsAndVMT	WorkerVehicleClass		LD_Mix
tblTripsAndVMT	WorkerVehicleClass		LD_Mix
tblTripsAndVMT	WorkerVehicleClass		LD_Mix
tblTripsAndVMT	WorkerVehicleClass		LD_Mix
tblTripsAndVMT	WorkerVehicleClass		LD_Mix
tblTripsAndVMT	WorkerVehicleClass		LD_Mix
tblTripsAndVMT	WorkerVehicleClass		LD_Mix
tblTripsAndVMT	WorkerVehicleClass		LD_Mix

2.0 Emissions Summary

2.1 Overall Construction

Unmitigated Construction

	ROG	NOx	CO	SO2	Fugitive PM10	Exhaust PM10	PM10 Total	Fugitive PM2.5	Exhaust PM2.5	PM2.5 Total	Bio- CO2	NBio- CO2	Total CO2	CH4	N2O	CO2e
Year	tons/yr										MT/yr					
2018					0.9946			0.0993								
2019					6.2474			0.6235								
2021					0.4942			0.0493								
2022					0.4942			0.0493								
2023					0.4942			0.0493								
2024					6.2798			0.6268								
2025					1.0074			0.1005								
2026					2.5352			0.2530								
2027					0.9987			0.0997								
2028					0.9946			0.0993								
2029					2.0249			0.2021								
2030					3.0471			0.3041								
2031					2.0442			0.2040								
2032					2.4968			0.2492								
2033					0.9946			0.0993								

	ROG	NOx	CO	SO2	Fugitive PM10	Exhaust PM10	PM10 Total	Fugitive PM2.5	Exhaust PM2.5	PM2.5 Total	Bio- CO2	NBio- CO2	Total CO2	CH4	N2O	CO2e
Year	tons/yr										MT/yr					
2034					2.5264			0.2522								
2035					5.5235			0.5513								
2036					1.0220			0.1020								
2037					1.0220			0.1020								
2038					1.0027			0.1001								
2039					0.9835			0.0981								
2040					1.0027			0.1001								
2041					1.0027			0.1001								
2042					1.0220			0.1020								
2043					1.0220			0.1020								
2044					1.0027			0.1001								
2045					1.0027			0.1001								
2046					1.0027			0.1001								
2047					1.0027			0.1001								
2048					1.0220			0.1020								
2049					1.0027			0.1001								
Total					**53.3130**			**5.3206**								

2.1 Overall Construction

Mitigated Construction

	ROG	NOx	CO	SO2	Fugitive PM10	Exhaust PM10	PM10 Total	Fugitive PM2.5	Exhaust PM2.5	PM2.5 Total	Bio- CO2	NBio- CO2	Total CO2	CH4	N2O	CO2e
Year	tons/yr										MT/yr					
2018					0.6090			0.0607								
2019					3.8254			0.3813								
2021					0.3026			0.0302								
2022					0.3026			0.0302								
2023					0.3026			0.0302								
2024					3.8452			0.3833								
2025					0.6168			0.0615								
2026					1.5523			0.1547								
2027					0.6115			0.0610								
2028					0.6090			0.0607								
2029					1.2399			0.1236								
2030					1.8658			0.1860								
2031					1.2517			0.1248								
2032					1.5288			0.1524								
2033					0.6090			0.0607								
2034					1.5469			0.1542								

	ROG	NOx	CO	SO2	Fugitive PM10	Exhaust PM10	PM10 Total	Fugitive PM2.5	Exhaust PM2.5	PM2.5 Total	Bio- CO2	NBio- CO2	Total CO2	CH4	N2O	CO2e
Year	tons/yr										MT/yr					
2035					3.3821			0.3371								
2036					0.6258			0.0624								
2037					0.6258			0.0624								
2038					0.6140			0.0612								
2039					0.6022			0.0600								
2040					0.6140			0.0612								
2041					0.6140			0.0612								
2042					0.6258			0.0624								
2043					0.6258			0.0624								
2044					0.6140			0.0612								
2045					0.6140			0.0612								
2046					0.6140			0.0612								
2047					0.6140			0.0612								
2048					0.6258			0.0624								
2049					0.6140			0.0612								
Total					**32.6438**			**3.2537**								

	ROG	**NOx**	**CO**	**SO2**	**Fugitive PM10**	**Exhaust PM10**	**PM10 Total**	**Fugitive PM2.5**	**Exhaust PM2.5**	**PM2.5 Total**	**Bio- CO2**	**NBio-CO2**	**Total CO2**	**CH4**	**N20**	**CO2e**
Percent Reduction	**0.00**	**0.00**	**0.00**	**0.00**	**38.77**	**0.00**	**0.00**	**38.85**	**0.00**	**0.00**	**0.00**	**0.00**	**0.00**	**0.00**	**0.00**	**0.00**

2.2 Overall Operational

Unmitigated Operational

	ROG	NOx	CO	SO2	Fugitive PM10	Exhaust PM10	PM10 Total	Fugitive PM2.5	Exhaust PM2.5	PM2.5 Total	Bio- CO2	NBio- CO2	Total CO2	CH4	N2O	CO2e
Category	tons/yr										MT/yr					
Area																
Energy																
Mobile					0.0000			0.0000								
Waste																
Water																
Total					**0.0000**			**0.0000**								

2.2 Overall Operational

Mitigated Operational

	ROG	NOx	CO	SO2	Fugitive PM10	Exhaust PM10	PM10 Total	Fugitive PM2.5	Exhaust PM2.5	PM2.5 Total	Bio- CO2	NBio- CO2	Total CO2	CH4	N2O	CO2e
Category	tons/yr										MT/yr					
Area																
Energy																
Mobile					0.0000			0.0000								
Waste																
Water																
Total					**0.0000**			**0.0000**								

	ROG	**NOx**	**CO**	**SO2**	**Fugitive PM10**	**Exhaust PM10**	**PM10 Total**	**Fugitive PM2.5**	**Exhaust PM2.5**	**PM2.5 Total**	**Bio- CO2**	**NBio-CO2**	**Total CO2**	**CH4**	**N20**	**CO2e**
Percent Reduction	**0.00**	**0.00**	**0.00**	**0.00**	**0.00**	**0.00**	**0.00**	**0.00**	**0.00**	**0.00**	**0.00**	**0.00**	**0.00**	**0.00**	**0.00**	**0.00**

3.0 Construction Detail

Construction Phase

Phase Number	Phase Name	Phase Type	Start Date	End Date	Num Days Week	Num Days	Phase Description
1	Year -2	Building Construction	9/1/2018	10/31/2018	6	52	
2	Year -1	Building Construction	1/1/2019	12/31/2019	6	313	
3	Year 2	Building Construction	10/1/2021	10/30/2021	6	26	

4	Year 3	Building Construction	10/1/2022	10/31/2022	6	26	
5	Year 4	Building Construction	10/1/2023	10/31/2023	6	26	
6	Year 5	Building Construction	1/1/2024	12/31/2024	6	314	
7	Year 6	Building Construction	9/1/2025	10/31/2025	6	53	
8	Year 7	Building Construction	6/1/2026	10/31/2026	6	132	
9	Year 8	Building Construction	9/1/2027	10/30/2027	6	52	
10	Year 9	Building Construction	9/1/2028	10/31/2028	6	52	
11	Year 10	Building Construction	7/1/2029	10/31/2029	6	105	
12	Year 11	Building Construction	5/1/2030	10/31/2030	6	158	
13	Year 12	Building Construction	7/1/2031	10/31/2031	6	106	
14	Year 13	Building Construction	6/1/2032	10/29/2032	6	130	
15	Year 14	Building Construction	9/1/2033	10/31/2033	6	52	
16	Year 15	Building Construction	6/1/2034	10/31/2034	6	131	
17	Year 16	Building Construction	1/1/2035	11/30/2035	6	287	
18	Year 17	Building Construction	9/1/2036	10/31/2036	6	53	
19	Year 18	Building Construction	9/1/2037	10/31/2037	6	53	
20	Year 19	Building Construction	9/1/2038	10/30/2038	6	52	
21	Year 20	Building Construction	9/1/2039	10/29/2039	6	51	
22	Year 21	Building Construction	9/1/2040	10/31/2040	6	52	
23	Year 22	Building Construction	9/1/2041	10/31/2041	6	52	
24	Year 23	Building Construction	9/1/2042	10/31/2042	6	53	
25	Year 24	Building Construction	9/1/2043	10/31/2043	6	53	
26	Year 25	Building Construction	9/1/2044	10/31/2044	6	52	
27	Year 26	Building Construction	9/1/2045	10/31/2045	6	52	
28	Year 27	Building Construction	9/1/2046	10/31/2046	6	52	
29	Year 28	Building Construction	9/1/2047	10/31/2047	6	52	
30	Year 29	Building Construction	9/1/2048	10/31/2048	6	53	
31	Year 30	Building Construction	9/1/2049	10/31/2049	6	52	

Acres of Grading (Site Preparation Phase): 0

Acres of Grading (Grading Phase): 0

Acres of Paving: 0

Residential Indoor: 0; Residential Outdoor: 0; Non-Residential Indoor: 0; Non-Residential Outdoor: 0 (Architectural Coating – sqft)

OffRoad Equipment

Phase Name	Offroad Equipment Type	Amount	Usage Hours	Horse Power	Load Factor

Trips and VMT

Phase Name	Offroad Equipment Count	Worker Trip Number	Vendor Trip Number	Hauling Trip Number	Worker Trip Length	Vendor Trip Length	Hauling Trip Length	Worker Vehicle Class	Vendor Vehicle Class	Hauling Vehicle Class
Year -2	0	47.00	1.20	0.00	0.60	0.60		LD_Mix	HHDT	
Year 9	0	47.00	1.20	0.00	0.60	0.60		LD_Mix	HHDT	
Year 10	0	47.00	1.60	0.00	0.60	0.60		LD_Mix	HHDT	
Year 11	0	47.00	1.60	0.00	0.60	0.60		LD_Mix	HHDT	
Year 12	0	47.00	1.60	0.00	0.60	0.60		LD_Mix	HHDT	
Year 13	0	47.00	1.40	0.00	0.60	0.60		LD_Mix	HHDT	
Year 14	0	47.00	1.20	0.00	0.60	0.60		LD_Mix	HHDT	
Year 15	0	47.00	1.60	0.00	0.60	0.60		LD_Mix	HHDT	
Year 16	0	47.00	1.50	0.00	0.60	0.60		LD_Mix	HHDT	
Year 17	0	47.00	1.60	0.00	0.60	0.60		LD_Mix	HHDT	
Year 18	0	47.00	1.60	0.00	0.60	0.60		LD_Mix	HHDT	
Year -1	0	47.00	3.30	0.00	0.60	0.60		LD_Mix	HHDT	
Year 19	0	47.00	1.60	0.00	0.60	0.60		LD_Mix	HHDT	
Year 20	0	47.00	1.60	0.00	0.60	0.60		LD_Mix	HHDT	
Year 21	0	47.00	1.60	0.00	0.60	0.60		LD_Mix	HHDT	
Year 22	0	47.00	1.60	0.00	0.60	0.60		LD_Mix	HHDT	

Year 23	0	47.00	1.60	0.00	0.60	0.60		LD_Mix	HHDT	
Year 24	0	47.00	1.60	0.00	0.60	0.60		LD_Mix	HHDT	
Year 25	0	47.00	1.60	0.00	0.60	0.60		LD_Mix	HHDT	
Year 26	0	47.00	1.60	0.00	0.60	0.60		LD_Mix	HHDT	
Year 27	0	47.00	1.60	0.00	0.60	0.60		LD_Mix	HHDT	
Year 28	0	47.00	1.60	0.00	0.60	0.60		LD_Mix	HHDT	
Year 2	0	47.00	0.90	0.00	0.60	0.60		LD_Mix	HHDT	
Year 29	0	47.00	1.60	0.00	0.60	0.60		LD_Mix	HHDT	
Year 30	0	47.00	1.60	0.00	0.60	0.60		LD_Mix	HHDT	
Year 3	0	47.00	0.90	0.00	0.60	0.60		LD_Mix	HHDT	
Year 4	0	47.00	0.90	0.00	0.60	0.60		LD_Mix	HHDT	
Year 5	0	47.00	3.40	0.00	0.60	0.60		LD_Mix	HHDT	
Year 6	0	47.00	0.90	0.00	0.60	0.60		LD_Mix	HHDT	
Year 7	0	47.00	1.40	0.00	0.60	0.60		LD_Mix	HHDT	
Year 8	0	47.00	1.40	0.00	0.60	0.60		LD_Mix	HHDT	

3.1 Mitigation Measures Construction

Reduce Vehicle Speed on Unpaved Roads

Clean Paved Roads

3.2 Year -2 - 2018

Unmitigated Construction Off-Site

	ROG	NOx	CO	SO2	Fugitive PM10	Exhaust PM10	PM10 Total	Fugitive PM2.5	Exhaust PM2.5	PM2.5 Total	Bio- CO2	NBio- CO2	Total CO2	CH4	N2O	CO2e
Category	tons/yr										MT/yr					
Hauling					0.0000			0.0000								
Vendor					0.0248			2.4700e-003								
Worker					0.9698			0.0968								
Total					**0.9946**			**0.0993**								

Mitigated Construction Off-Site

	ROG	NOx	CO	SO2	Fugitive PM10	Exhaust PM10	PM10 Total	Fugitive PM2.5	Exhaust PM2.5	PM2.5 Total	Bio- CO2	NBio- CO2	Total CO2	CH4	N2O	CO2e
Category	tons/yr										MT/yr					
Hauling					0.0000			0.0000								
Vendor					0.0152			1.5100e-003								
Worker					0.5938			0.0592								
Total					**0.6090**			**0.0607**								

3.3 Year -1 - 2019

Unmitigated Construction Off-Site

	ROG	NOx	CO	SO2	Fugitive PM10	Exhaust PM10	PM10 Total	Fugitive PM2.5	Exhaust PM2.5	PM2.5 Total	Bio- CO2	NBio- CO2	Total CO2	CH4	N2O	CO2e
Category	tons/yr										MT/yr					
Hauling					0.0000			0.0000								
Vendor					0.4099			0.0409								
Worker					5.8375			0.5826								
Total					**6.2474**			**0.6235**								

Mitigated Construction Off-Site

	ROG	NOx	CO	SO2	Fugitive PM10	Exhaust PM10	PM10 Total	Fugitive PM2.5	Exhaust PM2.5	PM2.5 Total	Bio- CO2	NBio- CO2	Total CO2	CH4	N2O	CO2e
Category	tons/yr										MT/yr					
Hauling					0.0000			0.0000								
Vendor					0.2510			0.0250								
Worker					3.5744			0.3563								
Total					**3.8254**			**0.3813**								

3.4 Year 2 - 2021

Unmitigated Construction Off-Site

	ROG	NOx	CO	SO2	Fugitive PM10	Exhaust PM10	PM10 Total	Fugitive PM2.5	Exhaust PM2.5	PM2.5 Total	Bio- CO2	NBio- CO2	Total CO2	CH4	N2O	CO2e
Category	tons/yr										MT/yr					
Hauling					0.0000			0.0000								
Vendor					9.2900e-003			9.3000e-004								
Worker					0.4849			0.0484								
Total					**0.4942**			**0.0493**								

Mitigated Construction Off-Site

	ROG	NOx	CO	SO2	Fugitive PM10	Exhaust PM10	PM10 Total	Fugitive PM2.5	Exhaust PM2.5	PM2.5 Total	Bio- CO2	NBio- CO2	Total CO2	CH4	N2O	CO2e
Category	tons/yr										MT/yr					
Hauling					0.0000			0.0000								
Vendor					5.6900e-003			5.7000e-004								
Worker					0.2969			0.0296								
Total					**0.3026**			**0.0302**								

3.5 Year 3 - 2022

Unmitigated Construction Off-Site

	ROG	NOx	CO	SO2	Fugitive PM10	Exhaust PM10	PM10 Total	Fugitive PM2.5	Exhaust PM2.5	PM2.5 Total	Bio- CO2	NBio- CO2	Total CO2	CH4	N2O	CO2e
Category	tons/yr										MT/yr					
Hauling					0.0000			0.0000								
Vendor					9.2900e-003			9.3000e-004								
Worker					0.4849			0.0484								
Total					**0.4942**			**0.0493**								

Mitigated Construction Off-Site

	ROG	NOx	CO	SO2	Fugitive PM10	Exhaust PM10	PM10 Total	Fugitive PM2.5	Exhaust PM2.5	PM2.5 Total	Bio- CO2	NBio- CO2	Total CO2	CH4	N2O	CO2e
Category	tons/yr										MT/yr					
Hauling					0.0000			0.0000								
Vendor					5.6900e-003			5.7000e-004								
Worker					0.2969			0.0296								
Total					**0.3026**			**0.0302**								

3.6 Year 4 - 2023

Unmitigated Construction Off-Site

	ROG	NOx	CO	SO2	Fugitive PM10	Exhaust PM10	PM10 Total	Fugitive PM2.5	Exhaust PM2.5	PM2.5 Total	Bio- CO2	NBio- CO2	Total CO2	CH4	N2O	CO2e
Category	tons/yr										MT/yr					
Hauling					0.0000			0.0000								
Vendor					9.2900e-003			9.3000e-004								
Worker					0.4849			0.0484								
Total					**0.4942**			**0.0493**								

Mitigated Construction Off-Site

	ROG	NOx	CO	SO2	Fugitive PM10	Exhaust PM10	PM10 Total	Fugitive PM2.5	Exhaust PM2.5	PM2.5 Total	Bio- CO2	NBio- CO2	Total CO2	CH4	N2O	CO2e
Category	tons/yr										MT/yr					
Hauling					0.0000			0.0000								
Vendor					5.6900e-003			5.7000e-004								
Worker					0.2969			0.0296								
Total					**0.3026**			**0.0302**								

3.7 Year 5 - 2024

Unmitigated Construction Off-Site

	ROG	NOx	CO	SO2	Fugitive PM10	Exhaust PM10	PM10 Total	Fugitive PM2.5	Exhaust PM2.5	PM2.5 Total	Bio- CO2	NBio- CO2	Total CO2	CH4	N2O	CO2e
Category	tons/yr										MT/yr					
Hauling					0.0000			0.0000								
Vendor					0.4237			0.0423								
Worker					5.8562			0.5845								
Total					**6.2798**			**0.6268**								

Mitigated Construction Off-Site

	ROG	NOx	CO	SO2	Fugitive PM10	Exhaust PM10	PM10 Total	Fugitive PM2.5	Exhaust PM2.5	PM2.5 Total	Bio- CO2	NBio- CO2	Total CO2	CH4	N2O	CO2e
Category	tons/yr										MT/yr					
Hauling					0.0000			0.0000								
Vendor					0.2594			0.0259								
Worker					3.5858			0.3574								
Total					**3.8452**			**0.3833**								

3.8 Year 6 - 2025

Unmitigated Construction Off-Site

	ROG	NOx	CO	SO2	Fugitive PM10	Exhaust PM10	PM10 Total	Fugitive PM2.5	Exhaust PM2.5	PM2.5 Total	Bio- CO2	NBio- CO2	Total CO2	CH4	N2O	CO2e
Category	tons/yr										MT/yr					
Hauling					0.0000			0.0000								
Vendor					0.0189			1.8900e-003								
Worker					0.9885			0.0987								
Total					**1.0074**			**0.1005**								

Mitigated Construction Off-Site

	ROG	NOx	CO	SO2	Fugitive PM10	Exhaust PM10	PM10 Total	Fugitive PM2.5	Exhaust PM2.5	PM2.5 Total	Bio- CO2	NBio- CO2	Total CO2	CH4	N2O	CO2e
Category	tons/yr										MT/yr					
Hauling					0.0000			0.0000								
Vendor					0.0116			1.1600e-003								
Worker					0.6053			0.0603								
Total					**0.6168**			**0.0615**								

3.9 Year 7 - 2026

Unmitigated Construction Off-Site

	ROG	NOx	CO	SO2	Fugitive PM10	Exhaust PM10	PM10 Total	Fugitive PM2.5	Exhaust PM2.5	PM2.5 Total	Bio- CO2	NBio- CO2	Total CO2	CH4	N2O	CO2e
Category	tons/yr										MT/yr					
Hauling					0.0000			0.0000								
Vendor					0.0733			7.3200e-003								
Worker					2.4618			0.2457								
Total					**2.5352**			**0.2530**								

Mitigated Construction Off-Site

	ROG	NOx	CO	SO2	Fugitive PM10	Exhaust PM10	PM10 Total	Fugitive PM2.5	Exhaust PM2.5	PM2.5 Total	Bio- CO2	NBio- CO2	Total CO2	CH4	N2O	CO2e
Category	tons/yr										MT/yr					
Hauling					0.0000			0.0000								
Vendor					0.0449			4.4800e-003								
Worker					1.5074			0.1503								
Total					**1.5523**			**0.1547**								

3.10 Year 8 - 2027

Unmitigated Construction Off-Site

	ROG	NOx	CO	SO2	Fugitive PM10	Exhaust PM10	PM10 Total	Fugitive PM2.5	Exhaust PM2.5	PM2.5 Total	Bio- CO2	NBio- CO2	Total CO2	CH4	N2O	CO2e
Category	tons/yr										MT/yr					
Hauling					0.0000			0.0000								
Vendor					0.0289			2.8800e-003								
Worker					0.9698			0.0968								
Total					**0.9987**			**0.0997**								

Mitigated Construction Off-Site

	ROG	NOx	CO	SO2	Fugitive PM10	Exhaust PM10	PM10 Total	Fugitive PM2.5	Exhaust PM2.5	PM2.5 Total	Bio- CO2	NBio- CO2	Total CO2	CH4	N2O	CO2e
Category	tons/yr										MT/yr					
Hauling					0.0000			0.0000								
Vendor					0.0177			1.7600e-003								
Worker					0.5938			0.0592								
Total					**0.6115**			**0.0610**								

3.11 Year 9 - 2028

Unmitigated Construction Off-Site

	ROG	NOx	CO	SO2	Fugitive PM10	Exhaust PM10	PM10 Total	Fugitive PM2.5	Exhaust PM2.5	PM2.5 Total	Bio- CO2	NBio- CO2	Total CO2	CH4	N2O	CO2e
Category	tons/yr										MT/yr					
Hauling					0.0000			0.0000								
Vendor					0.0248			2.4700e-003								
Worker					0.9698			0.0968								
Total					**0.9946**			**0.0993**								

Mitigated Construction Off-Site

	ROG	NOx	CO	SO2	Fugitive PM10	Exhaust PM10	PM10 Total	Fugitive PM2.5	Exhaust PM2.5	PM2.5 Total	Bio- CO2	NBio- CO2	Total CO2	CH4	N2O	CO2e
Category	tons/yr										MT/yr					
Hauling					0.0000			0.0000								
Vendor					0.0152			1.5100e-003								
Worker					0.5938			0.0592								
Total					**0.6090**			**0.0607**								

3.12 Year 10 - 2029

Unmitigated Construction Off-Site

	ROG	NOx	CO	SO2	Fugitive PM10	Exhaust PM10	PM10 Total	Fugitive PM2.5	Exhaust PM2.5	PM2.5 Total	Bio- CO2	NBio- CO2	Total CO2	CH4	N2O	CO2e
Category	tons/yr										MT/yr					
Hauling					0.0000			0.0000								
Vendor					0.0667			6.6600e-003								
Worker					1.9583			0.1955								
Total					**2.0249**			**0.2021**								

Mitigated Construction Off-Site

	ROG	NOx	CO	SO2	Fugitive PM10	Exhaust PM10	PM10 Total	Fugitive PM2.5	Exhaust PM2.5	PM2.5 Total	Bio- CO2	NBio- CO2	Total CO2	CH4	N2O	CO2e
Category	tons/yr										MT/yr					
Hauling					0.0000			0.0000								
Vendor					0.0408			4.0700e-003								
Worker					1.1991			0.1195								
Total					**1.2399**			**0.1236**								

3.13 Year 11 - 2030

Unmitigated Construction Off-Site

	ROG	NOx	CO	SO2	Fugitive PM10	Exhaust PM10	PM10 Total	Fugitive PM2.5	Exhaust PM2.5	PM2.5 Total	Bio- CO2	NBio- CO2	Total CO2	CH4	N2O	CO2e
Category	tons/yr										MT/yr					
Hauling					0.0000			0.0000								
Vendor					0.1003			0.0100								
Worker					2.9467			0.2941								
Total					**3.0471**			**0.3041**								

Mitigated Construction Off-Site

	ROG	NOx	CO	SO2	Fugitive PM10	Exhaust PM10	PM10 Total	Fugitive PM2.5	Exhaust PM2.5	PM2.5 Total	Bio- CO2	NBio- CO2	Total CO2	CH4	N2O	CO2e
Category	tons/yr										MT/yr					
Hauling					0.0000			0.0000								
Vendor					0.0614			6.1300e-003								
Worker					1.8043			0.1799								
Total					**1.8658**			**0.1860**								

3.14 Year 12 - 2031

Unmitigated Construction Off-Site

	ROG	NOx	CO	SO2	Fugitive PM10	Exhaust PM10	PM10 Total	Fugitive PM2.5	Exhaust PM2.5	PM2.5 Total	Bio- CO2	NBio- CO2	Total CO2	CH4	N2O	CO2e
Category	tons/yr										MT/yr					
Hauling					0.0000			0.0000								
Vendor					0.0673			6.7200e-003								
Worker					1.9769			0.1973								
Total					**2.0442**			**0.2040**								

Mitigated Construction Off-Site

	ROG	NOx	CO	SO2	Fugitive PM10	Exhaust PM10	PM10 Total	Fugitive PM2.5	Exhaust PM2.5	PM2.5 Total	Bio- CO2	NBio- CO2	Total CO2	CH4	N2O	CO2e
Category	tons/yr										MT/yr					
Hauling					0.0000			0.0000								
Vendor					0.0412			4.1100e-003								
Worker					1.2105			0.1207								
Total					**1.2517**			**0.1248**								

3.15 Year 13 - 2032

Unmitigated Construction Off-Site

	ROG	NOx	CO	SO2	Fugitive PM10	Exhaust PM10	PM10 Total	Fugitive PM2.5	Exhaust PM2.5	PM2.5 Total	Bio- CO2	NBio- CO2	Total CO2	CH4	N2O	CO2e
Category	tons/yr										MT/yr					
Hauling					0.0000			0.0000								
Vendor					0.0722			7.2100e-003								
Worker					2.4245			0.2420								
Total					**2.4968**			**0.2492**								

Mitigated Construction Off-Site

	ROG	NOx	CO	SO2	Fugitive PM10	Exhaust PM10	PM10 Total	Fugitive PM2.5	Exhaust PM2.5	PM2.5 Total	Bio- CO2	NBio- CO2	Total CO2	CH4	N2O	CO2e
Category	tons/yr										MT/yr					
Hauling					0.0000			0.0000								
Vendor					0.0442			4.4100e-003								
Worker					1.4846			0.1480								
Total					**1.5288**			**0.1524**								

3.16 Year 14 - 2033

Unmitigated Construction Off-Site

	ROG	NOx	CO	SO2	Fugitive PM10	Exhaust PM10	PM10 Total	Fugitive PM2.5	Exhaust PM2.5	PM2.5 Total	Bio- CO2	NBio- CO2	Total CO2	CH4	N2O	CO2e
Category	tons/yr										MT/yr					
Hauling					0.0000			0.0000								
Vendor					0.0248			2.4700e-003								
Worker					0.9698			0.0968								
Total					**0.9946**			**0.0993**								

Mitigated Construction Off-Site

	ROG	NOx	CO	SO2	Fugitive PM10	Exhaust PM10	PM10 Total	Fugitive PM2.5	Exhaust PM2.5	PM2.5 Total	Bio- CO2	NBio- CO2	Total CO2	CH4	N2O	CO2e
Category	tons/yr										MT/yr					
Hauling					0.0000			0.0000								
Vendor					0.0152			1.5100e-003								
Worker					0.5938			0.0592								
Total					**0.6090**			**0.0607**								

3.17 Year 15 - 2034

Unmitigated Construction Off-Site

	ROG	NOx	CO	SO2	Fugitive PM10	Exhaust PM10	PM10 Total	Fugitive PM2.5	Exhaust PM2.5	PM2.5 Total	Bio- CO2	NBio- CO2	Total CO2	CH4	N2O	CO2e
Category	tons/yr										MT/yr					
Hauling					0.0000			0.0000								
Vendor					0.0832			8.3000e-003								
Worker					2.4432			0.2438								
Total					**2.5264**			**0.2521**								

Mitigated Construction Off-Site

	ROG	NOx	CO	SO2	Fugitive PM10	Exhaust PM10	PM10 Total	Fugitive PM2.5	Exhaust PM2.5	PM2.5 Total	Bio- CO2	NBio- CO2	Total CO2	CH4	N2O	CO2e
Category	tons/yr										MT/yr					
Hauling					0.0000			0.0000								
Vendor					0.0509			5.0800e-003								
Worker					1.4960			0.1491								
Total					**1.5469**			**0.1542**								

3.18 Year 16 - 2035

Unmitigated Construction Off-Site

	ROG	NOx	CO	SO2	Fugitive PM10	Exhaust PM10	PM10 Total	Fugitive PM2.5	Exhaust PM2.5	PM2.5 Total	Bio- CO2	NBio- CO2	Total CO2	CH4	N2O	CO2e
Category	tons/yr										MT/yr					
Hauling					0.0000			0.0000								
Vendor					0.1708			0.0171								
Worker					5.3526			0.5342								
Total					**5.5234**			**0.5513**								

Mitigated Construction Off-Site

	ROG	NOx	CO	SO2	Fugitive PM10	Exhaust PM10	PM10 Total	Fugitive PM2.5	Exhaust PM2.5	PM2.5 Total	Bio- CO2	NBio- CO2	Total CO2	CH4	N2O	CO2e
Category	tons/yr										MT/yr					
Hauling					0.0000			0.0000								
Vendor					0.1046			0.0104								
Worker					3.2775			0.3267								
Total					**3.3821**			**0.3371**								

3.19 Year 17 - 2036

Unmitigated Construction Off-Site

	ROG	NOx	CO	SO2	Fugitive PM10	Exhaust PM10	PM10 Total	Fugitive PM2.5	Exhaust PM2.5	PM2.5 Total	Bio- CO2	NBio- CO2	Total CO2	CH4	N2O	CO2e
Category	tons/yr										MT/yr					
Hauling					0.0000			0.0000								
Vendor					0.0337			3.3600e-003								
Worker					0.9884			0.0986								
Total					**1.0220**			**0.1020**								

Mitigated Construction Off-Site

	ROG	NOx	CO	SO2	Fugitive PM10	Exhaust PM10	PM10 Total	Fugitive PM2.5	Exhaust PM2.5	PM2.5 Total	Bio- CO2	NBio- CO2	Total CO2	CH4	N2O	CO2e
Category	tons/yr										MT/yr					
Hauling					0.0000			0.0000								
Vendor					0.0206			2.0500e-003								
Worker					0.6052			0.0603								
Total					**0.6258**			**0.0624**								

3.20 Year 18 - 2037

Unmitigated Construction Off-Site

	ROG	NOx	CO	SO2	Fugitive PM10	Exhaust PM10	PM10 Total	Fugitive PM2.5	Exhaust PM2.5	PM2.5 Total	Bio- CO2	NBio- CO2	Total CO2	CH4	N2O	CO2e
Category	tons/yr										MT/yr					
Hauling					0.0000			0.0000								
Vendor					0.0337			3.3600e-003								
Worker					0.9884			0.0986								
Total					**1.0220**			**0.1020**								

Mitigated Construction Off-Site

	ROG	NOx	CO	SO2	Fugitive PM10	Exhaust PM10	PM10 Total	Fugitive PM2.5	Exhaust PM2.5	PM2.5 Total	Bio- CO2	NBio- CO2	Total CO2	CH4	N2O	CO2e
Category	tons/yr										MT/yr					
Hauling					0.0000			0.0000								
Vendor					0.0206			2.0500e-003								
Worker					0.6052			0.0603								
Total					**0.6258**			**0.0624**								

3.21 Year 19 - 2038

Unmitigated Construction Off-Site

	ROG	NOx	CO	SO2	Fugitive PM10	Exhaust PM10	PM10 Total	Fugitive PM2.5	Exhaust PM2.5	PM2.5 Total	Bio- CO2	NBio- CO2	Total CO2	CH4	N2O	CO2e
Category	tons/yr										MT/yr					
Hauling					0.0000			0.0000								
Vendor					0.0330			3.2900e-003								
Worker					0.9697			0.0968								
Total					**1.0027**			**0.1001**								

Mitigated Construction Off-Site

	ROG	NOx	CO	SO2	Fugitive PM10	Exhaust PM10	PM10 Total	Fugitive PM2.5	Exhaust PM2.5	PM2.5 Total	Bio- CO2	NBio- CO2	Total CO2	CH4	N2O	CO2e
Category	tons/yr										MT/yr					
Hauling					0.0000			0.0000								
Vendor					0.0202			2.0100e-003								
Worker					0.5937			0.0592								
Total					**0.6140**			**0.0612**								

3.22 Year 20 - 2039

Unmitigated Construction Off-Site

	ROG	NOx	CO	SO2	Fugitive PM10	Exhaust PM10	PM10 Total	Fugitive PM2.5	Exhaust PM2.5	PM2.5 Total	Bio- CO2	NBio- CO2	Total CO2	CH4	N2O	CO2e
Category	tons/yr										MT/yr					
Hauling					0.0000			0.0000								
Vendor					0.0324			3.2300e-003								
Worker					0.9511			0.0949								
Total					**0.9835**			**0.0981**								

Mitigated Construction Off-Site

	ROG	NOx	CO	SO2	Fugitive PM10	Exhaust PM10	PM10 Total	Fugitive PM2.5	Exhaust PM2.5	PM2.5 Total	Bio- CO2	NBio- CO2	Total CO2	CH4	N2O	CO2e
Category	tons/yr										MT/yr					
Hauling					0.0000			0.0000								
Vendor					0.0198			1.9800e-003								
Worker					0.5823			0.0580								
Total					**0.6021**			**0.0600**								

3.23 Year 21 - 2040

Unmitigated Construction Off-Site

	ROG	NOx	CO	SO2	Fugitive PM10	Exhaust PM10	PM10 Total	Fugitive PM2.5	Exhaust PM2.5	PM2.5 Total	Bio- CO2	NBio- CO2	Total CO2	CH4	N2O	CO2e
Category	tons/yr										MT/yr					
Hauling					0.0000			0.0000								
Vendor					0.0330			3.2900e-003								
Worker					0.9697			0.0968								
Total					**1.0027**			**0.1001**								

Mitigated Construction Off-Site

	ROG	NOx	CO	SO2	Fugitive PM10	Exhaust PM10	PM10 Total	Fugitive PM2.5	Exhaust PM2.5	PM2.5 Total	Bio- CO2	NBio- CO2	Total CO2	CH4	N2O	CO2e
Category	tons/yr										MT/yr					
Hauling					0.0000			0.0000								
Vendor					0.0202			2.0100e-003								
Worker					0.5937			0.0592								
Total					**0.6140**			**0.0612**								

3.24 Year 22 - 2041

Unmitigated Construction Off-Site

	ROG	NOx	CO	SO2	Fugitive PM10	Exhaust PM10	PM10 Total	Fugitive PM2.5	Exhaust PM2.5	PM2.5 Total	Bio- CO2	NBio- CO2	Total CO2	CH4	N2O	CO2e
Category	tons/yr										MT/yr					
Hauling					0.0000			0.0000								
Vendor					0.0330			3.2900e-003								
Worker					0.9697			0.0968								
Total					**1.0027**			**0.1001**								

Mitigated Construction Off-Site

	ROG	NOx	CO	SO2	Fugitive PM10	Exhaust PM10	PM10 Total	Fugitive PM2.5	Exhaust PM2.5	PM2.5 Total	Bio- CO2	NBio- CO2	Total CO2	CH4	N2O	CO2e
Category	tons/yr										MT/yr					
Hauling					0.0000			0.0000								
Vendor					0.0202			2.0100e-003								
Worker					0.5937			0.0592								
Total					**0.6140**			**0.0612**								

3.25 Year 23 - 2042

Unmitigated Construction Off-Site

	ROG	NOx	CO	SO2	Fugitive PM10	Exhaust PM10	PM10 Total	Fugitive PM2.5	Exhaust PM2.5	PM2.5 Total	Bio- CO2	NBio- CO2	Total CO2	CH4	N2O	CO2e
Category	tons/yr										MT/yr					
Hauling					0.0000			0.0000								
Vendor					0.0337			3.3600e-003								
Worker					0.9884			0.0986								
Total					**1.0220**			**0.1020**								

Mitigated Construction Off-Site

	ROG	NOx	CO	SO2	Fugitive PM10	Exhaust PM10	PM10 Total	Fugitive PM2.5	Exhaust PM2.5	PM2.5 Total	Bio- CO2	NBio- CO2	Total CO2	CH4	N2O	CO2e
Category	tons/yr										MT/yr					
Hauling					0.0000			0.0000								
Vendor					0.0206			2.0500e-003								
Worker					0.6052			0.0603								
Total					**0.6258**			**0.0624**								

3.26 Year 24 - 2043

Unmitigated Construction Off-Site

	ROG	NOx	CO	SO2	Fugitive PM10	Exhaust PM10	PM10 Total	Fugitive PM2.5	Exhaust PM2.5	PM2.5 Total	Bio- CO2	NBio- CO2	Total CO2	CH4	N2O	CO2e
Category	tons/yr										MT/yr					
Hauling					0.0000			0.0000								
Vendor					0.0337			3.3600e-003								
Worker					0.9884			0.0986								
Total					**1.0220**			**0.1020**								

Mitigated Construction Off-Site

	ROG	NOx	CO	SO2	Fugitive PM10	Exhaust PM10	PM10 Total	Fugitive PM2.5	Exhaust PM2.5	PM2.5 Total	Bio- CO2	NBio- CO2	Total CO2	CH4	N2O	CO2e
Category	tons/yr										MT/yr					
Hauling					0.0000			0.0000								
Vendor					0.0206			2.0500e-003								
Worker					0.6052			0.0603								
Total					**0.6258**			**0.0624**								

3.27 Year 25 - 2044

Unmitigated Construction Off-Site

	ROG	NOx	CO	SO2	Fugitive PM10	Exhaust PM10	PM10 Total	Fugitive PM2.5	Exhaust PM2.5	PM2.5 Total	Bio- CO2	NBio- CO2	Total CO2	CH4	N2O	CO2e
Category	tons/yr										MT/yr					
Hauling					0.0000			0.0000								
Vendor					0.0330			3.2900e-003								
Worker					0.9697			0.0968								
Total					**1.0027**			**0.1001**								

Mitigated Construction Off-Site

	ROG	NOx	CO	SO2	Fugitive PM10	Exhaust PM10	PM10 Total	Fugitive PM2.5	Exhaust PM2.5	PM2.5 Total	Bio- CO2	NBio- CO2	Total CO2	CH4	N2O	CO2e
Category	tons/yr										MT/yr					
Hauling					0.0000			0.0000								
Vendor					0.0202			2.0100e-003								
Worker					0.5937			0.0592								
Total					**0.6140**			**0.0612**								

3.28 Year 26 - 2045

Unmitigated Construction Off-Site

	ROG	NOx	CO	SO2	Fugitive PM10	Exhaust PM10	PM10 Total	Fugitive PM2.5	Exhaust PM2.5	PM2.5 Total	Bio- CO2	NBio- CO2	Total CO2	CH4	N2O	CO2e
Category	tons/yr										MT/yr					
Hauling					0.0000			0.0000								
Vendor					0.0330			3.2900e-003								
Worker					0.9697			0.0968								
Total					**1.0027**			**0.1001**								

Mitigated Construction Off-Site

	ROG	NOx	CO	SO2	Fugitive PM10	Exhaust PM10	PM10 Total	Fugitive PM2.5	Exhaust PM2.5	PM2.5 Total	Bio- CO2	NBio- CO2	Total CO2	CH4	N2O	CO2e
Category	tons/yr										MT/yr					
Hauling					0.0000			0.0000								
Vendor					0.0202			2.0100e-003								
Worker					0.5937			0.0592								
Total					**0.6140**			**0.0612**								

3.29 Year 27 - 2046

Unmitigated Construction Off-Site

	ROG	NOx	CO	SO2	Fugitive PM10	Exhaust PM10	PM10 Total	Fugitive PM2.5	Exhaust PM2.5	PM2.5 Total	Bio- CO2	NBio- CO2	Total CO2	CH4	N2O	CO2e
Category	tons/yr										MT/yr					
Hauling					0.0000			0.0000								
Vendor					0.0330			3.2900e-003								
Worker					0.9697			0.0968								
Total					**1.0027**			**0.1001**								

Mitigated Construction Off-Site

	ROG	NOx	CO	SO2	Fugitive PM10	Exhaust PM10	PM10 Total	Fugitive PM2.5	Exhaust PM2.5	PM2.5 Total	Bio- CO2	NBio- CO2	Total CO2	CH4	N2O	CO2e
Category	tons/yr										MT/yr					
Hauling					0.0000			0.0000								
Vendor					0.0202			2.0100e-003								
Worker					0.5937			0.0592								
Total					**0.6140**			**0.0612**								

3.30 Year 28 - 2047

Unmitigated Construction Off-Site

	ROG	NOx	CO	SO2	Fugitive PM10	Exhaust PM10	PM10 Total	Fugitive PM2.5	Exhaust PM2.5	PM2.5 Total	Bio- CO2	NBio- CO2	Total CO2	CH4	N2O	CO2e
Category	tons/yr										MT/yr					
Hauling					0.0000			0.0000								
Vendor					0.0330			3.2900e-003								
Worker					0.9697			0.0968								
Total					**1.0027**			**0.1001**								

Mitigated Construction Off-Site

	ROG	NOx	CO	SO2	Fugitive PM10	Exhaust PM10	PM10 Total	Fugitive PM2.5	Exhaust PM2.5	PM2.5 Total	Bio- CO2	NBio- CO2	Total CO2	CH4	N2O	CO2e
Category	tons/yr										MT/yr					
Hauling					0.0000			0.0000								
Vendor					0.0202			2.0100e-003								
Worker					0.5937			0.0592								
Total					**0.6140**			**0.0612**								

3.31 Year 29 - 2048

Unmitigated Construction Off-Site

	ROG	NOx	CO	SO2	Fugitive PM10	Exhaust PM10	PM10 Total	Fugitive PM2.5	Exhaust PM2.5	PM2.5 Total	Bio- CO2	NBio- CO2	Total CO2	CH4	N2O	CO2e
Category	tons/yr										MT/yr					
Hauling					0.0000			0.0000								
Vendor					0.0337			3.3600e-003								
Worker					0.9884			0.0986								
Total					**1.0220**			**0.1020**								

Mitigated Construction Off-Site

	ROG	NOx	CO	SO2	Fugitive PM10	Exhaust PM10	PM10 Total	Fugitive PM2.5	Exhaust PM2.5	PM2.5 Total	Bio- CO2	NBio- CO2	Total CO2	CH4	N2O	CO2e
Category	tons/yr										MT/yr					
Hauling					0.0000			0.0000								
Vendor					0.0206			2.0500e-003								
Worker					0.6052			0.0603								
Total					**0.6258**			**0.0624**								

3.32 Year 30 - 2049

Unmitigated Construction Off-Site

	ROG	NOx	CO	SO2	Fugitive PM10	Exhaust PM10	PM10 Total	Fugitive PM2.5	Exhaust PM2.5	PM2.5 Total	Bio- CO2	NBio- CO2	Total CO2	CH4	N2O	CO2e
Category	tons/yr										MT/yr					
Hauling					0.0000			0.0000								
Vendor					0.0330			3.2900e-003								
Worker					0.9697			0.0968								
Total					**1.0027**			**0.1001**								

Mitigated Construction Off-Site

	ROG	NOx	CO	SO2	Fugitive PM10	Exhaust PM10	PM10 Total	Fugitive PM2.5	Exhaust PM2.5	PM2.5 Total	Bio- CO2	NBio- CO2	Total CO2	CH4	N2O	CO2e
Category	tons/yr										MT/yr					
Hauling					0.0000			0.0000								
Vendor					0.0202			2.0100e-003								
Worker					0.5937			0.0592								
Total					**0.6140**			**0.0612**								

4.0 Operational Detail - Mobile

4.1 Mitigation Measures Mobile

	ROG	NOx	CO	SO2	Fugitive PM10	Exhaust PM10	PM10 Total	Fugitive PM2.5	Exhaust PM2.5	PM2.5 Total	Bio- CO2	NBio- CO2	Total CO2	CH4	N2O	CO2e
Category	tons/yr										MT/yr					
Mitigated					0.0000			0.0000								
Unmitigated					0.0000			0.0000								

4.2 Trip Summary Information

	Average Daily Trip Rate			Unmitigated	Mitigated
Land Use	Weekday	Saturday	Sunday	Annual VMT	Annual VMT
User Defined Industrial	0.00	0.00	0.00		
Total	0.00	0.00	0.00		

4.3 Trip Type Information

	Miles			Trip %			Trip Purpose %		
Land Use	H-W or C-W	H-S or C-C	H-O or C-NW	H-W or C-W	H-S or C-C	H-O or C-NW	Primary	Diverted	Pass-by
User Defined Industrial	8.80	4.60	4.60	0.00	0.00	0.00	0	0	0

LDA	LDT1	LDT2	MDV	LHD1	LHD2	MHD	HHD	OBUS	UBUS	MCY	SBUS	MH
0.491782	0.035344	0.208299	0.151084	0.049421	0.007284	0.022101	0.017711	0.002208	0.002109	0.008228	0.001403	0.003026

5.0 Energy Detail

4.4 Fleet Mix

Historical Energy Use: N

5.1 Mitigation Measures Energy

	ROG	NOx	CO	SO2	Fugitive PM10	Exhaust PM10	PM10 Total	Fugitive PM2.5	Exhaust PM2.5	PM2.5 Total	Bio- CO2	NBio- CO2	Total CO2	CH4	N2O	CO2e
Category	tons/yr										MT/yr					
Electricity Mitigated																
Electricity Unmitigated																
NaturalGas Mitigated																
NaturalGas Unmitigated																

5.2 Energy by Land Use - NaturalGas

Unmitigated

	NaturalGas Use	ROG	NOx	CO	SO2	Fugitive PM10	Exhaust PM10	PM10 Total	Fugitive PM2.5	Exhaust PM2.5	PM2.5 Total	Bio- CO2	NBio- CO2	Total CO2	CH4	N2O	CO2e
Land Use	kBTU/yr	tons/yr										MT/yr					
User Defined Industrial	0																
Total																	

5.2 Energy by Land Use - NaturalGas

Mitigated

	NaturalGas Use	ROG	NOx	CO	SO2	Fugitive PM10	Exhaust PM10	PM10 Total	Fugitive PM2.5	Exhaust PM2.5	PM2.5 Total	Bio- CO2	NBio- CO2	Total CO2	CH4	N2O	CO2e
Land Use	kBTU/yr	tons/yr										MT/yr					
User Defined Industrial	0																
Total																	

5.3 Energy by Land Use - Electricity

Unmitigated

	Electricity Use	Total CO2	CH4	N2O	CO2e
Land Use	kWh/yr	MT/yr			
User Defined Industrial	0				
Total					

5.3 Energy by Land Use - Electricity

Mitigated

	Electricity Use	Total CO2	CH4	N2O	CO2e
Land Use	kWh/yr	MT/yr			
User Defined Industrial	0				
Total					

6.0 Area Detail

6.1 Mitigation Measures Area

	ROG	NOx	CO	SO2	Fugitive PM10	Exhaust PM10	PM10 Total	Fugitive PM2.5	Exhaust PM2.5	PM2.5 Total	Bio- CO2	NBio- CO2	Total CO2	CH4	N2O	CO2e
Category	tons/yr										MT/yr					
Mitigated																
Unmitigated																

6.2 Area by SubCategory

Unmitigated

	ROG	NOx	CO	SO2	Fugitive PM10	Exhaust PM10	PM10 Total	Fugitive PM2.5	Exhaust PM2.5	PM2.5 Total	Bio- CO2	NBio- CO2	Total CO2	CH4	N2O	CO2e
SubCategory	tons/yr										MT/yr					
Architectural Coating																
Total																

Mitigated

	ROG	NOx	CO	SO2	Fugitive PM10	Exhaust PM10	PM10 Total	Fugitive PM2.5	Exhaust PM2.5	PM2.5 Total	Bio- CO2	NBio- CO2	Total CO2	CH4	N2O	CO2e
SubCategory	tons/yr										MT/yr					
Architectural Coating																
Total																

7.0 Water Detail

7.1 Mitigation Measures Water

	Total CO2	CH4	N2O	CO2e
Category	MT/yr			
Mitigated				
Unmitigated				

7.2 Water by Land Use

Unmitigated

	Indoor/Outdoor Use	Total CO2	CH4	N2O	CO2e
Land Use	Mgal	MT/yr			
User Defined Industrial	0 / 0				
Total					

7.2 Water by Land Use

Mitigated

	Indoor/Outdoor Use	Total CO2	CH4	N2O	CO2e
Land Use	Mgal	MT/yr			
User Defined Industrial	0 / 0				
Total					

8.0 Waste Detail

8.1 Mitigation Measures Waste

Category/Year

	Total CO2	CH4	N2O	CO2e
	MT/yr			
Mitigated				
Unmitigated				

8.2 Waste by Land Use

Unmitigated

	Waste Disposed	Total CO2	CH4	N2O	CO2e
Land Use	tons	MT/yr			
User Defined Industrial	0				
Total					

Mitigated

	Waste Disposed	Total CO2	CH4	N2O	CO2e
Land Use	tons	MT/yr			
User Defined Industrial	0				
Total					

9.0 Operational Offroad

Equipment Type	Number	Hours/Day	Days/Year	Horse Power	Load Factor	Fuel Type

10.0 Vegetation

10.0 Vegetation

ATTACHMENT C

Health Risk Assessment

- HRA Sources
- Toxic Emission Calculations
- HRA Structures
- HRA Receptors
- HRA Results
- HRA Figures
- Modeling Files

HRA Sources

- Table C-1: HRA Emission Sources Max Hour Emissions
- Table C-2: HRA Emission Sources Annual Emissions
- Table C-3: Project Sources' Locations and Parameters

TABLE C-1: HRA Emission Sources Max Hour Emisisons

Source	AERMOD Source Designation	CAS Number, Pollutant Abbreviation and Emisisons (lbs/hr)														
		1151 PAHs-w/o	9901 DieselExhPM	50000 Formaldehyde	56235 CCl4	67561 Methanol	67630 Isopropyl Alcoh	67663 Chloroform	71432 Benzene	75003 Ethyl Chloride	75014 Vinyl Chloride	75070 Acetaldehyde	75092 Methylene Chlor	75343 1,1-DiClEthane	79005 1,1,2TriClEthan	79345 TetraClEthane
Truck Travel	SLINE1	0.00E+00	0.00E+00	0.00E+00	0.00E+00	0.00E+00	0.00E+00	0.00E+00	0.00E+00	0.00E+00	0.00E+00	0.00E+00	0.00E+00	0.00E+00	0.00E+00	0.00E+00
10,000 Barrel 1	STCK1	0.00E+00	0.00E+00	0.00E+00	0.00E+00	0.00E+00	0.00E+00	0.00E+00	2.08E-03	0.00E+00	0.00E+00	0.00E+00	0.00E+00	0.00E+00	0.00E+00	0.00E+00
85 MMBtu SG 3	STCK10	8.09E-06	0.00E+00	9.95E-04	0.00E+00	0.00E+00	0.00E+00	0.00E+00	4.69E-04	0.00E+00	0.00E+00	2.51E-04	0.00E+00	0.00E+00	0.00E+00	0.00E+00
85 MMBtu SG 4	STCK11	8.09E-06	0.00E+00	9.95E-04	0.00E+00	0.00E+00	0.00E+00	0.00E+00	4.69E-04	0.00E+00	0.00E+00	2.51E-04	0.00E+00	0.00E+00	0.00E+00	0.00E+00
85 MMBtu SG 5	STCK12	8.09E-06	0.00E+00	9.95E-04	0.00E+00	0.00E+00	0.00E+00	0.00E+00	4.69E-04	0.00E+00	0.00E+00	2.51E-04	0.00E+00	0.00E+00	0.00E+00	0.00E+00
85 MMBtu SG 6	STCK13	8.09E-06	0.00E+00	9.95E-04	0.00E+00	0.00E+00	0.00E+00	0.00E+00	4.69E-04	0.00E+00	0.00E+00	2.51E-04	0.00E+00	0.00E+00	0.00E+00	0.00E+00
Generator	STCK14	5.52E-05	0.00E+00	1.08E-01	7.54E-05	5.13E-03	0.00E+00	5.85E-05	9.04E-04	3.84E-06	3.06E-05	1.72E-02	4.11E-05	4.85E-05	6.53E-05	8.22E-05
Emergency Flare	STCK15	5.33E-04	0.00E+00	4.45E-02	0.00E+00	0.00E+00	0.00E+00	0.00E+00	6.06E-03	0.00E+00	0.00E+00	1.64E-03	0.00E+00	0.00E+00	0.00E+00	0.00E+00
100 Barrel 1	STCK16	0.00E+00	0.00E+00	0.00E+00	0.00E+00	0.00E+00	0.00E+00	0.00E+00	1.13E-05	0.00E+00	0.00E+00	0.00E+00	0.00E+00	0.00E+00	0.00E+00	0.00E+00
100 Barrel 2	STCK17	0.00E+00	0.00E+00	0.00E+00	0.00E+00	0.00E+00	0.00E+00	0.00E+00	1.13E-05	0.00E+00	0.00E+00	0.00E+00	0.00E+00	0.00E+00	0.00E+00	0.00E+00
1,000 BBL Skim Tank 2	STCK18	0.00E+00	0.00E+00	0.00E+00	0.00E+00	0.00E+00	0.00E+00	0.00E+00	4.63E-04	0.00E+00	0.00E+00	0.00E+00	0.00E+00	0.00E+00	0.00E+00	0.00E+00
1,000 BBL Sludge Tank 2	STCK19	0.00E+00	0.00E+00	0.00E+00	0.00E+00	0.00E+00	0.00E+00	0.00E+00	1.81E-04	0.00E+00	0.00E+00	0.00E+00	0.00E+00	0.00E+00	0.00E+00	0.00E+00
10,000 Barrel 2	STCK2	0.00E+00	0.00E+00	0.00E+00	0.00E+00	0.00E+00	0.00E+00	0.00E+00	2.08E-03	0.00E+00	0.00E+00	0.00E+00	0.00E+00	0.00E+00	0.00E+00	0.00E+00
6,500 Barrel 1	STCK3	0.00E+00	0.00E+00	0.00E+00	0.00E+00	0.00E+00	0.00E+00	0.00E+00	4.02E-03	0.00E+00	0.00E+00	0.00E+00	0.00E+00	0.00E+00	0.00E+00	0.00E+00
6,500 Barrel 2	STCK4	0.00E+00	0.00E+00	0.00E+00	0.00E+00	0.00E+00	0.00E+00	0.00E+00	4.02E-03	0.00E+00	0.00E+00	0.00E+00	0.00E+00	0.00E+00	0.00E+00	0.00E+00
1,000 BBL Skim Tank 1	STCK5	0.00E+00	0.00E+00	0.00E+00	0.00E+00	0.00E+00	0.00E+00	0.00E+00	4.63E-04	0.00E+00	0.00E+00	0.00E+00	0.00E+00	0.00E+00	0.00E+00	0.00E+00
1,000 BBL Sludge Tank 1	STCK6	0.00E+00	0.00E+00	0.00E+00	0.00E+00	0.00E+00	0.00E+00	0.00E+00	1.81E-04	0.00E+00	0.00E+00	0.00E+00	0.00E+00	0.00E+00	0.00E+00	0.00E+00
62.5 MMBtu SG	STCK7	5.95E-06	0.00E+00	7.31E-04	0.00E+00	0.00E+00	0.00E+00	0.00E+00	3.45E-04	0.00E+00	0.00E+00	1.84E-04	0.00E+00	0.00E+00	0.00E+00	0.00E+00
85 MMBtu SG 1	STCK8	8.09E-06	0.00E+00	9.95E-04	0.00E+00	0.00E+00	0.00E+00	0.00E+00	4.69E-04	0.00E+00	0.00E+00	2.51E-04	0.00E+00	0.00E+00	0.00E+00	0.00E+00
85 MMBtu SG 2	STCK9	8.09E-06	0.00E+00	9.95E-04	0.00E+00	0.00E+00	0.00E+00	0.00E+00	4.69E-04	0.00E+00	0.00E+00	2.51E-04	0.00E+00	0.00E+00	0.00E+00	0.00E+00
OCP-CPF Phase 1 Oil Fugitives - 1	VOL1	0.00E+00	0.00E+00	0.00E+00	0.00E+00	4.78E-04	4.78E-04	0.00E+00	2.06E-06	0.00E+00	0.00E+00	0.00E+00	0.00E+00	0.00E+00	0.00E+00	0.00E+00
OCP-CPF Phase 2 Gas Fugitives - 1	VOL10	0.00E+00	0.00E+00	0.00E+00	0.00E+00	4.78E-04	4.78E-04	0.00E+00	6.08E-05	0.00E+00	0.00E+00	0.00E+00	0.00E+00	0.00E+00	0.00E+00	0.00E+00
Well Fugitives	VOL100	0.00E+00	0.00E+00	0.00E+00	0.00E+00	0.00E+00	0.00E+00	0.00E+00	1.52E-06	0.00E+00	0.00E+00	0.00E+00	0.00E+00	0.00E+00	0.00E+00	0.00E+00
Well Fugitives	VOL101	0.00E+00	0.00E+00	0.00E+00	0.00E+00	0.00E+00	0.00E+00	0.00E+00	1.52E-06	0.00E+00	0.00E+00	0.00E+00	0.00E+00	0.00E+00	0.00E+00	0.00E+00
Well Fugitives	VOL102	0.00E+00	0.00E+00	0.00E+00	0.00E+00	0.00E+00	0.00E+00	0.00E+00	1.52E-06	0.00E+00	0.00E+00	0.00E+00	0.00E+00	0.00E+00	0.00E+00	0.00E+00
Well Fugitives	VOL103	0.00E+00	0.00E+00	0.00E+00	0.00E+00	0.00E+00	0.00E+00	0.00E+00	1.52E-06	0.00E+00	0.00E+00	0.00E+00	0.00E+00	0.00E+00	0.00E+00	0.00E+00
Well Fugitives	VOL104	0.00E+00	0.00E+00	0.00E+00	0.00E+00	0.00E+00	0.00E+00	0.00E+00	1.52E-06	0.00E+00	0.00E+00	0.00E+00	0.00E+00	0.00E+00	0.00E+00	0.00E+00
Well Fugitives	VOL105	0.00E+00	0.00E+00	0.00E+00	0.00E+00	0.00E+00	0.00E+00	0.00E+00	1.52E-06	0.00E+00	0.00E+00	0.00E+00	0.00E+00	0.00E+00	0.00E+00	0.00E+00
Well Fugitives	VOL106	0.00E+00	0.00E+00	0.00E+00	0.00E+00	0.00E+00	0.00E+00	0.00E+00	1.52E-06	0.00E+00	0.00E+00	0.00E+00	0.00E+00	0.00E+00	0.00E+00	0.00E+00
Well Fugitives	VOL107	0.00E+00	0.00E+00	0.00E+00	0.00E+00	0.00E+00	0.00E+00	0.00E+00	1.52E-06	0.00E+00	0.00E+00	0.00E+00	0.00E+00	0.00E+00	0.00E+00	0.00E+00
Well Fugitives	VOL108	0.00E+00	0.00E+00	0.00E+00	0.00E+00	0.00E+00	0.00E+00	0.00E+00	1.52E-06	0.00E+00	0.00E+00	0.00E+00	0.00E+00	0.00E+00	0.00E+00	0.00E+00
Well Fugitives	VOL109	0.00E+00	0.00E+00	0.00E+00	0.00E+00	0.00E+00	0.00E+00	0.00E+00	1.52E-06	0.00E+00	0.00E+00	0.00E+00	0.00E+00	0.00E+00	0.00E+00	0.00E+00
OCP-CPF Phase 2 Gas Fugitives - 2	VOL11	0.00E+00	0.00E+00	0.00E+00	0.00E+00	4.78E-04	4.78E-04	0.00E+00	6.08E-05	0.00E+00	0.00E+00	0.00E+00	0.00E+00	0.00E+00	0.00E+00	0.00E+00
Well Fugitives	VOL110	0.00E+00	0.00E+00	0.00E+00	0.00E+00	0.00E+00	0.00E+00	0.00E+00	1.52E-06	0.00E+00	0.00E+00	0.00E+00	0.00E+00	0.00E+00	0.00E+00	0.00E+00
Well Fugitives	VOL111	0.00E+00	0.00E+00	0.00E+00	0.00E+00	0.00E+00	0.00E+00	0.00E+00	1.52E-06	0.00E+00	0.00E+00	0.00E+00	0.00E+00	0.00E+00	0.00E+00	0.00E+00
Well Fugitives	VOL112	0.00E+00	0.00E+00	0.00E+00	0.00E+00	0.00E+00	0.00E+00	0.00E+00	1.52E-06	0.00E+00	0.00E+00	0.00E+00	0.00E+00	0.00E+00	0.00E+00	0.00E+00
Well Fugitives	VOL113	0.00E+00	0.00E+00	0.00E+00	0.00E+00	0.00E+00	0.00E+00	0.00E+00	1.52E-06	0.00E+00	0.00E+00	0.00E+00	0.00E+00	0.00E+00	0.00E+00	0.00E+00
Well Fugitives	VOL114	0.00E+00	0.00E+00	0.00E+00	0.00E+00	0.00E+00	0.00E+00	0.00E+00	1.52E-06	0.00E+00	0.00E+00	0.00E+00	0.00E+00	0.00E+00	0.00E+00	0.00E+00
Well Fugitives	VOL115	0.00E+00	0.00E+00	0.00E+00	0.00E+00	0.00E+00	0.00E+00	0.00E+00	1.52E-06	0.00E+00	0.00E+00	0.00E+00	0.00E+00	0.00E+00	0.00E+00	0.00E+00
Well Fugitives	VOL116	0.00E+00	0.00E+00	0.00E+00	0.00E+00	0.00E+00	0.00E+00	0.00E+00	1.52E-06	0.00E+00	0.00E+00	0.00E+00	0.00E+00	0.00E+00	0.00E+00	0.00E+00
Well Fugitives	VOL117	0.00E+00	0.00E+00	0.00E+00	0.00E+00	0.00E+00	0.00E+00	0.00E+00	1.52E-06	0.00E+00	0.00E+00	0.00E+00	0.00E+00	0.00E+00	0.00E+00	0.00E+00
Well Fugitives	VOL118	0.00E+00	0.00E+00	0.00E+00	0.00E+00	0.00E+00	0.00E+00	0.00E+00	1.52E-06	0.00E+00	0.00E+00	0.00E+00	0.00E+00	0.00E+00	0.00E+00	0.00E+00
Well Fugitives	VOL119	0.00E+00	0.00E+00	0.00E+00	0.00E+00	0.00E+00	0.00E+00	0.00E+00	1.52E-06	0.00E+00	0.00E+00	0.00E+00	0.00E+00	0.00E+00	0.00E+00	0.00E+00
OCP-CPF Phase 2 Gas Fugitives - 3	VOL12	0.00E+00	0.00E+00	0.00E+00	0.00E+00	4.78E-04	4.78E-04	0.00E+00	6.08E-05	0.00E+00	0.00E+00	0.00E+00	0.00E+00	0.00E+00	0.00E+00	0.00E+00
Well Fugitives	VOL120	0.00E+00	0.00E+00	0.00E+00	0.00E+00	0.00E+00	0.00E+00	0.00E+00	1.52E-06	0.00E+00	0.00E+00	0.00E+00	0.00E+00	0.00E+00	0.00E+00	0.00E+00
Well Fugitives	VOL121	0.00E+00	0.00E+00	0.00E+00	0.00E+00	0.00E+00	0.00E+00	0.00E+00	1.52E-06	0.00E+00	0.00E+00	0.00E+00	0.00E+00	0.00E+00	0.00E+00	0.00E+00
Well Fugitives	VOL122	0.00E+00	0.00E+00	0.00E+00	0.00E+00	0.00E+00	0.00E+00	0.00E+00	1.52E-06	0.00E+00	0.00E+00	0.00E+00	0.00E+00	0.00E+00	0.00E+00	0.00E+00
Well Fugitives	VOL123	0.00E+00	0.00E+00	0.00E+00	0.00E+00	0.00E+00	0.00E+00	0.00E+00	1.52E-06	0.00E+00	0.00E+00	0.00E+00	0.00E+00	0.00E+00	0.00E+00	0.00E+00
Well Fugitives	VOL124	0.00E+00	0.00E+00	0.00E+00	0.00E+00	0.00E+00	0.00E+00	0.00E+00	1.52E-06	0.00E+00	0.00E+00	0.00E+00	0.00E+00	0.00E+00	0.00E+00	0.00E+00
Well Fugitives	VOL125	0.00E+00	0.00E+00	0.00E+00	0.00E+00	0.00E+00	0.00E+00	0.00E+00	1.52E-06	0.00E+00	0.00E+00	0.00E+00	0.00E+00	0.00E+00	0.00E+00	0.00E+00
Well Fugitives	VOL126	0.00E+00	0.00E+00	0.00E+00	0.00E+00	0.00E+00	0.00E+00	0.00E+00	1.52E-06	0.00E+00	0.00E+00	0.00E+00	0.00E+00	0.00E+00	0.00E+00	0.00E+00
Well Fugitives	VOL127	0.00E+00	0.00E+00	0.00E+00	0.00E+00	0.00E+00	0.00E+00	0.00E+00	1.52E-06	0.00E+00	0.00E+00	0.00E+00	0.00E+00	0.00E+00	0.00E+00	0.00E+00
Well Fugitives	VOL128	0.00E+00	0.00E+00	0.00E+00	0.00E+00	0.00E+00	0.00E+00	0.00E+00	1.52E-06	0.00E+00	0.00E+00	0.00E+00	0.00E+00	0.00E+00	0.00E+00	0.00E+00
Well Fugitives	VOL129	0.00E+00	0.00E+00	0.00E+00	0.00E+00	0.00E+00	0.00E+00	0.00E+00	1.52E-06	0.00E+00	0.00E+00	0.00E+00	0.00E+00	0.00E+00	0.00E+00	0.00E+00
SCP/CPP Oil Fugitives - 1	VOL13	0.00E+00	0.00E+00	0.00E+00	0.00E+00	9.75E-04	9.75E-04	0.00E+00	3.67E-06	0.00E+00	0.00E+00	0.00E+00	0.00E+00	0.00E+00	0.00E+00	0.00E+00
Well Fugitives	VOL130	0.00E+00	0.00E+00	0.00E+00	0.00E+00	0.00E+00	0.00E+00	0.00E+00	1.52E-06	0.00E+00	0.00E+00	0.00E+00	0.00E+00	0.00E+00	0.00E+00	0.00E+00
Well Fugitives	VOL131	0.00E+00	0.00E+00	0.00E+00	0.00E+00	0.00E+00	0.00E+00	0.00E+00	1.52E-06	0.00E+00	0.00E+00	0.00E+00	0.00E+00	0.00E+00	0.00E+00	0.00E+00
Well Fugitives	VOL132	0.00E+00	0.00E+00	0.00E+00	0.00E+00	0.00E+00	0.00E+00	0.00E+00	1.52E-06	0.00E+00	0.00E+00	0.00E+00	0.00E+00	0.00E+00	0.00E+00	0.00E+00
Well Fugitives	VOL133	0.00E+00	0.00E+00	0.00E+00	0.00E+00	0.00E+00	0.00E+00	0.00E+00	1.52E-06	0.00E+00	0.00E+00	0.00E+00	0.00E+00	0.00E+00	0.00E+00	0.00E+00
Brine Tanks Solvent Use Toxics	VOL134	0.00E+00	0.00E+00	0.00E+00	0.00E+00	0.00E+00	0.00E+00	0.00E+00	0.00E+00	0.00E+00	0.00E+00	0.00E+00	0.00E+00	0.00E+00	0.00E+00	0.00E+00
WSP Solvent Use Toxics	VOL135	0.00E+00	0.00E+00	0.00E+00	0.00E+00	1.14E-03	1.14E-03	0.00E+00	0.00E+00	0.00E+00	0.00E+00	0.00E+00	0.00E+00	0.00E+00	0.00E+00	0.00E+00
WSP Solvent Use Toxics	VOL136	0.00E+00	0.00E+00	0.00E+00	0.00E+00	1.14E-03	1.14E-03	0.00E+00	0.00E+00	0.00E+00	0.00E+00	0.00E+00	0.00E+00	0.00E+00	0.00E+00	0.00E+00
WSP Solvent Use Toxics	VOL137	0.00E+00	0.00E+00	0.00E+00	0.00E+00	1.14E-03	1.14E-03	0.00E+00	0.00E+00	0.00E+00	0.00E+00	0.00E+00	0.00E+00	0.00E+00	0.00E+00	0.00E+00
WSP Solvent Use Toxics	VOL138	0.00E+00	0.00E+00	0.00E+00	0.00E+00	1.14E-03	1.14E-03	0.00E+00	0.00E+00	0.00E+00	0.00E+00	0.00E+00	0.00E+00	0.00E+00	0.00E+00	0.00E+00
WSP Solvent Use Toxics	VOL139	0.00E+00	0.00E+00	0.00E+00	0.00E+00	1.14E-03	1.14E-03	0.00E+00	0.00E+00	0.00E+00	0.00E+00	0.00E+00	0.00E+00	0.00E+00	0.00E+00	0.00E+00

TABLE C-1: HRA Emission Sources Max Hour Emisisons

Source	AERMOD Source Designation	CAS Number, Pollutant Abbreviation and Emisisons (lbs/hr)														
		1151 PAHs-w/o	9901 DieselExhPM	50000 Formaldehyde	56235 CCl4	67561 Methanol	67630 Isopropyl Alcoh	67663 Chloroform	71432 Benzene	75003 Ethyl Chloride	75014 Vinyl Chloride	75070 Acetaldehyde	75092 Methylene Chlor	75343 1,1-DiClEthane	79005 1,1,2TriClEthan	79345 TetraClEthane
SCP/CPP Oil Fugitives - 2	VOL14	0.00E+00	0.00E+00	0.00E+00	0.00E+00	9.75E-04	9.75E-04	0.00E+00	3.67E-06	0.00E+00	0.00E+00	0.00E+00	0.00E+00	0.00E+00	0.00E+00	0.00E+00
SCP/CPP Oil Fugitives - 3	VOL15	0.00E+00	0.00E+00	0.00E+00	0.00E+00	9.75E-04	9.75E-04	0.00E+00	3.67E-06	0.00E+00	0.00E+00	0.00E+00	0.00E+00	0.00E+00	0.00E+00	0.00E+00
SCP/CPP Oil Fugitives - 4	VOL16	0.00E+00	0.00E+00	0.00E+00	0.00E+00	9.75E-04	9.75E-04	0.00E+00	3.67E-06	0.00E+00	0.00E+00	0.00E+00	0.00E+00	0.00E+00	0.00E+00	0.00E+00
SCP/CPP Oil Fugitives - 5	VOL17	0.00E+00	0.00E+00	0.00E+00	0.00E+00	9.75E-04	9.75E-04	0.00E+00	3.67E-06	0.00E+00	0.00E+00	0.00E+00	0.00E+00	0.00E+00	0.00E+00	0.00E+00
SCP/CPP Gas Fugitives - 1	VOL18	0.00E+00	0.00E+00	0.00E+00	0.00E+00	9.75E-04	9.75E-04	0.00E+00	1.14E-04	0.00E+00	0.00E+00	0.00E+00	0.00E+00	0.00E+00	0.00E+00	0.00E+00
SCP/CPP Gas Fugitives - 2	VOL19	0.00E+00	0.00E+00	0.00E+00	0.00E+00	9.75E-04	9.75E-04	0.00E+00	1.14E-04	0.00E+00	0.00E+00	0.00E+00	0.00E+00	0.00E+00	0.00E+00	0.00E+00
OCP-CPF Phase 1 Oil Fugitives - 2	VOL2	0.00E+00	0.00E+00	0.00E+00	0.00E+00	4.78E-04	4.78E-04	0.00E+00	2.06E-06	0.00E+00	0.00E+00	0.00E+00	0.00E+00	0.00E+00	0.00E+00	0.00E+00
SCP/CPP Gas Fugitives - 3	VOL20	0.00E+00	0.00E+00	0.00E+00	0.00E+00	9.75E-04	9.75E-04	0.00E+00	1.14E-04	0.00E+00	0.00E+00	0.00E+00	0.00E+00	0.00E+00	0.00E+00	0.00E+00
SCP/CPP Gas Fugitives - 4	VOL21	0.00E+00	0.00E+00	0.00E+00	0.00E+00	9.75E-04	9.75E-04	0.00E+00	1.14E-04	0.00E+00	0.00E+00	0.00E+00	0.00E+00	0.00E+00	0.00E+00	0.00E+00
SCP/CPP Gas Fugitives - 5	VOL22	0.00E+00	0.00E+00	0.00E+00	0.00E+00	9.75E-04	9.75E-04	0.00E+00	1.14E-04	0.00E+00	0.00E+00	0.00E+00	0.00E+00	0.00E+00	0.00E+00	0.00E+00
LOS/COS Oil Fugitives	VOL23	0.00E+00	0.00E+00	0.00E+00	0.00E+00	3.92E-03	3.92E-03	0.00E+00	1.02E-05	0.00E+00	0.00E+00	0.00E+00	0.00E+00	0.00E+00	0.00E+00	0.00E+00
LOS/COS Gas Fugitives	VOL24	0.00E+00	0.00E+00	0.00E+00	0.00E+00	3.92E-03	3.92E-03	0.00E+00	2.56E-04	0.00E+00	0.00E+00	0.00E+00	0.00E+00	0.00E+00	0.00E+00	0.00E+00
Phase 1 WCP Oil Fugitives - 1	VOL25	0.00E+00	0.00E+00	0.00E+00	0.00E+00	4.65E-04	4.65E-04	0.00E+00	4.18E-06	0.00E+00	0.00E+00	0.00E+00	0.00E+00	0.00E+00	0.00E+00	0.00E+00
Phase 1 WCP Oil Fugitives - 2	VOL26	0.00E+00	0.00E+00	0.00E+00	0.00E+00	4.65E-04	4.65E-04	0.00E+00	4.18E-06	0.00E+00	0.00E+00	0.00E+00	0.00E+00	0.00E+00	0.00E+00	0.00E+00
Phase 1 WCP Gas Fugitives - 1	VOL27	0.00E+00	0.00E+00	0.00E+00	0.00E+00	4.65E-04	4.65E-04	0.00E+00	5.08E-05	0.00E+00	0.00E+00	0.00E+00	0.00E+00	0.00E+00	0.00E+00	0.00E+00
Phase 1 WCP Gas Fugitives - 2	VOL28	0.00E+00	0.00E+00	0.00E+00	0.00E+00	4.65E-04	4.65E-04	0.00E+00	5.08E-05	0.00E+00	0.00E+00	0.00E+00	0.00E+00	0.00E+00	0.00E+00	0.00E+00
Phase 2 WCP Oil Fugitives - 1	VOL29	0.00E+00	0.00E+00	0.00E+00	0.00E+00	4.65E-04	4.65E-04	0.00E+00	4.18E-06	0.00E+00	0.00E+00	0.00E+00	0.00E+00	0.00E+00	0.00E+00	0.00E+00
OCP-CPF Phase 1 Oil Fugitives - 3	VOL3	0.00E+00	0.00E+00	0.00E+00	0.00E+00	4.78E-04	4.78E-04	0.00E+00	2.06E-06	0.00E+00	0.00E+00	0.00E+00	0.00E+00	0.00E+00	0.00E+00	0.00E+00
Phase 2 WCP Oil Fugitives - 2	VOL30	0.00E+00	0.00E+00	0.00E+00	0.00E+00	4.65E-04	4.65E-04	0.00E+00	4.18E-06	0.00E+00	0.00E+00	0.00E+00	0.00E+00	0.00E+00	0.00E+00	0.00E+00
Phase 2 WCP Gas Fugitives - 1	VOL31	0.00E+00	0.00E+00	0.00E+00	0.00E+00	4.65E-04	4.65E-04	0.00E+00	5.08E-05	0.00E+00	0.00E+00	0.00E+00	0.00E+00	0.00E+00	0.00E+00	0.00E+00
Phase 2 WCP Gas Fugitives - 2	VOL32	0.00E+00	0.00E+00	0.00E+00	0.00E+00	4.65E-04	4.65E-04	0.00E+00	5.08E-05	0.00E+00	0.00E+00	0.00E+00	0.00E+00	0.00E+00	0.00E+00	0.00E+00
LACT Oil Fugitives - 1	VOL33	0.00E+00	0.00E+00	0.00E+00	0.00E+00	4.33E-05	4.33E-05	0.00E+00	4.13E-06	0.00E+00	0.00E+00	0.00E+00	0.00E+00	0.00E+00	0.00E+00	0.00E+00
LACT Oil Fugitives - 2	VOL34	0.00E+00	0.00E+00	0.00E+00	0.00E+00	4.33E-05	4.33E-05	0.00E+00	2.05E-06	0.00E+00	0.00E+00	0.00E+00	0.00E+00	0.00E+00	0.00E+00	0.00E+00
LACT Oil Fugitives - 3	VOL35	0.00E+00	0.00E+00	0.00E+00	0.00E+00	4.33E-05	4.33E-05	0.00E+00	6.43E-07	0.00E+00	0.00E+00	0.00E+00	0.00E+00	0.00E+00	0.00E+00	0.00E+00
LACT Gas Fugitives - 1	VOL36	0.00E+00	0.00E+00	0.00E+00	0.00E+00	4.33E-05	4.33E-05	0.00E+00	2.02E-05	0.00E+00	0.00E+00	0.00E+00	0.00E+00	0.00E+00	0.00E+00	0.00E+00
LACT Gas Fugitives - 2	VOL37	0.00E+00	0.00E+00	0.00E+00	0.00E+00	4.33E-05	4.33E-05	0.00E+00	1.01E-05	0.00E+00	0.00E+00	0.00E+00	0.00E+00	0.00E+00	0.00E+00	0.00E+00
LACT Gas Fugitives - 3	VOL38	0.00E+00	0.00E+00	0.00E+00	0.00E+00	4.33E-05	4.33E-05	0.00E+00	0.00E+00	0.00E+00	0.00E+00	0.00E+00	0.00E+00	0.00E+00	0.00E+00	0.00E+00
Sulfurox Gas Fugitives - 1	VOL39	0.00E+00	0.00E+00	0.00E+00	0.00E+00	8.34E-05	8.34E-05	0.00E+00	2.46E-05	0.00E+00	0.00E+00	0.00E+00	0.00E+00	0.00E+00	0.00E+00	0.00E+00
OCP-CPF Phase 1 Gas Fugitives - 1	VOL4	0.00E+00	0.00E+00	0.00E+00	0.00E+00	4.78E-04	4.78E-04	0.00E+00	7.01E-05	0.00E+00	0.00E+00	0.00E+00	0.00E+00	0.00E+00	0.00E+00	0.00E+00
Sulfurox Gas Fugitives - 2	VOL40	0.00E+00	0.00E+00	0.00E+00	0.00E+00	8.34E-05	8.34E-05	0.00E+00	2.46E-05	0.00E+00	0.00E+00	0.00E+00	0.00E+00	0.00E+00	0.00E+00	0.00E+00
Sulfurox Gas Fugitives - 3	VOL41	0.00E+00	0.00E+00	0.00E+00	0.00E+00	8.34E-05	8.34E-05	0.00E+00	2.46E-05	0.00E+00	0.00E+00	0.00E+00	0.00E+00	0.00E+00	0.00E+00	0.00E+00
Sulfurox GasFugitives - 4	VOL42	0.00E+00	0.00E+00	0.00E+00	0.00E+00	8.34E-05	8.34E-05	0.00E+00	2.46E-05	0.00E+00	0.00E+00	0.00E+00	0.00E+00	0.00E+00	0.00E+00	0.00E+00
Sulfurox Gas Fugitives - 5	VOL43	0.00E+00	0.00E+00	0.00E+00	0.00E+00	8.34E-05	8.34E-05	0.00E+00	2.46E-05	0.00E+00	0.00E+00	0.00E+00	0.00E+00	0.00E+00	0.00E+00	0.00E+00
Sulfurox Gas Fugitives - 6	VOL44	0.00E+00	0.00E+00	0.00E+00	0.00E+00	8.34E-05	8.34E-05	0.00E+00	2.46E-05	0.00E+00	0.00E+00	0.00E+00	0.00E+00	0.00E+00	0.00E+00	0.00E+00
Sulfurox Gas Fugitives - 7	VOL45	0.00E+00	0.00E+00	0.00E+00	0.00E+00	8.34E-05	8.34E-05	0.00E+00	2.46E-05	0.00E+00	0.00E+00	0.00E+00	0.00E+00	0.00E+00	0.00E+00	0.00E+00
Sulfurox Gas Fugitives - 8	VOL46	0.00E+00	0.00E+00	0.00E+00	0.00E+00	8.34E-05	8.34E-05	0.00E+00	2.46E-05	0.00E+00	0.00E+00	0.00E+00	0.00E+00	0.00E+00	0.00E+00	0.00E+00
PGTP All Fugitives V-5880 P-5890 P59	VOL47	0.00E+00	0.00E+00	0.00E+00	0.00E+00	2.43E-05	2.43E-05	0.00E+00	3.79E-05	0.00E+00	0.00E+00	0.00E+00	0.00E+00	0.00E+00	0.00E+00	0.00E+00
PGTP and GS Fugitives FF-5030 FF-50	VOL48	0.00E+00	0.00E+00	0.00E+00	0.00E+00	4.77E-04	4.77E-04	0.00E+00	2.16E-04	0.00E+00	0.00E+00	0.00E+00	0.00E+00	0.00E+00	0.00E+00	0.00E+00
PGTP Fugitives P-5980 P-5990 V-5970	VOL49	0.00E+00	0.00E+00	0.00E+00	0.00E+00	3.89E-04	3.89E-04	0.00E+00	8.98E-05	0.00E+00	0.00E+00	0.00E+00	0.00E+00	0.00E+00	0.00E+00	0.00E+00
OCP-CPF Phase 1 Gas Fugitives - 2	VOL5	0.00E+00	0.00E+00	0.00E+00	0.00E+00	4.78E-04	4.78E-04	0.00E+00	7.01E-05	0.00E+00	0.00E+00	0.00E+00	0.00E+00	0.00E+00	0.00E+00	0.00E+00
PGTP Fugitives V-5670 V-5660	VOL50	0.00E+00	0.00E+00	0.00E+00	0.00E+00	3.89E-04	3.89E-04	0.00E+00	9.29E-05	0.00E+00	0.00E+00	0.00E+00	0.00E+00	0.00E+00	0.00E+00	0.00E+00
PGSG Fugitives SG-6030 V-6050	VOL51	0.00E+00	0.00E+00	0.00E+00	0.00E+00	2.43E-05	2.43E-05	0.00E+00	6.20E-05	0.00E+00	0.00E+00	0.00E+00	0.00E+00	0.00E+00	0.00E+00	0.00E+00
OCP-GS FF-1510 FF-1520 HX-1080 HX	VOL52	0.00E+00	0.00E+00	0.00E+00	0.00E+00	1.13E-03	1.13E-03	0.00E+00	3.52E-04	0.00E+00	0.00E+00	0.00E+00	0.00E+00	0.00E+00	0.00E+00	0.00E+00
Loading Rack 1	VOL53	0.00E+00	0.00E+00	0.00E+00	0.00E+00	0.00E+00	0.00E+00	0.00E+00	6.52E-03	0.00E+00	0.00E+00	0.00E+00	0.00E+00	0.00E+00	0.00E+00	0.00E+00
Loading Rack 2	VOL54	0.00E+00	0.00E+00	0.00E+00	0.00E+00	0.00E+00	0.00E+00	0.00E+00	6.52E-03	0.00E+00	0.00E+00	0.00E+00	0.00E+00	0.00E+00	0.00E+00	0.00E+00
Flare Gas Fugitives F5910	VOL55	0.00E+00	0.00E+00	0.00E+00	0.00E+00	2.43E-05	2.43E-05	0.00E+00	1.01E-05	0.00E+00	0.00E+00	0.00E+00	0.00E+00	0.00E+00	0.00E+00	0.00E+00
Well Fugitives	VOL56	0.00E+00	0.00E+00	0.00E+00	0.00E+00	0.00E+00	0.00E+00	0.00E+00	1.52E-06	0.00E+00	0.00E+00	0.00E+00	0.00E+00	0.00E+00	0.00E+00	0.00E+00
Well Fugitives	VOL57	0.00E+00	0.00E+00	0.00E+00	0.00E+00	0.00E+00	0.00E+00	0.00E+00	1.52E-06	0.00E+00	0.00E+00	0.00E+00	0.00E+00	0.00E+00	0.00E+00	0.00E+00
Well Fugitives	VOL58	0.00E+00	0.00E+00	0.00E+00	0.00E+00	0.00E+00	0.00E+00	0.00E+00	1.52E-06	0.00E+00	0.00E+00	0.00E+00	0.00E+00	0.00E+00	0.00E+00	0.00E+00
Well Fugitives	VOL59	0.00E+00	0.00E+00	0.00E+00	0.00E+00	0.00E+00	0.00E+00	0.00E+00	1.52E-06	0.00E+00	0.00E+00	0.00E+00	0.00E+00	0.00E+00	0.00E+00	0.00E+00
OCP-CPF Phase 1 Gas Fugitives - 3	VOL6	0.00E+00	0.00E+00	0.00E+00	0.00E+00	4.78E-04	4.78E-04	0.00E+00	7.01E-05	0.00E+00	0.00E+00	0.00E+00	0.00E+00	0.00E+00	0.00E+00	0.00E+00
Well Fugitives	VOL60	0.00E+00	0.00E+00	0.00E+00	0.00E+00	0.00E+00	0.00E+00	0.00E+00	1.52E-06	0.00E+00	0.00E+00	0.00E+00	0.00E+00	0.00E+00	0.00E+00	0.00E+00
Well Fugitives	VOL61	0.00E+00	0.00E+00	0.00E+00	0.00E+00	0.00E+00	0.00E+00	0.00E+00	1.52E-06	0.00E+00	0.00E+00	0.00E+00	0.00E+00	0.00E+00	0.00E+00	0.00E+00
Well Fugitives	VOL62	0.00E+00	0.00E+00	0.00E+00	0.00E+00	0.00E+00	0.00E+00	0.00E+00	1.52E-06	0.00E+00	0.00E+00	0.00E+00	0.00E+00	0.00E+00	0.00E+00	0.00E+00
Well Fugitives	VOL63	0.00E+00	0.00E+00	0.00E+00	0.00E+00	0.00E+00	0.00E+00	0.00E+00	1.52E-06	0.00E+00	0.00E+00	0.00E+00	0.00E+00	0.00E+00	0.00E+00	0.00E+00
Well Fugitives	VOL64	0.00E+00	0.00E+00	0.00E+00	0.00E+00	0.00E+00	0.00E+00	0.00E+00	1.52E-06	0.00E+00	0.00E+00	0.00E+00	0.00E+00	0.00E+00	0.00E+00	0.00E+00
Well Fugitives	VOL65	0.00E+00	0.00E+00	0.00E+00	0.00E+00	0.00E+00	0.00E+00	0.00E+00	1.52E-06	0.00E+00	0.00E+00	0.00E+00	0.00E+00	0.00E+00	0.00E+00	0.00E+00
Well Fugitives	VOL66	0.00E+00	0.00E+00	0.00E+00	0.00E+00	0.00E+00	0.00E+00	0.00E+00	1.52E-06	0.00E+00	0.00E+00	0.00E+00	0.00E+00	0.00E+00	0.00E+00	0.00E+00
Well Fugitives	VOL67	0.00E+00	0.00E+00	0.00E+00	0.00E+00	0.00E+00	0.00E+00	0.00E+00	1.52E-06	0.00E+00	0.00E+00	0.00E+00	0.00E+00	0.00E+00	0.00E+00	0.00E+00
Well Fugitives	VOL68	0.00E+00	0.00E+00	0.00E+00	0.00E+00	0.00E+00	0.00E+00	0.00E+00	1.52E-06	0.00E+00	0.00E+00	0.00E+00	0.00E+00	0.00E+00	0.00E+00	0.00E+00
Well Fugitives	VOL69	0.00E+00	0.00E+00	0.00E+00	0.00E+00	0.00E+00	0.00E+00	0.00E+00	1.52E-06	0.00E+00	0.00E+00	0.00E+00	0.00E+00	0.00E+00	0.00E+00	0.00E+00
OCP-CPF Phase 2 Oil Fugitives - 1	VOL7	0.00E+00	0.00E+00	0.00E+00	0.00E+00	4.78E-04	4.78E-04	0.00E+00	1.78E-06	0.00E+00	0.00E+00	0.00E+00	0.00E+00	0.00E+00	0.00E+00	0.00E+00
Well Fugitives	VOL70	0.00E+00	0.00E+00	0.00E+00	0.00E+00	0.00E+00	0.00E+00	0.00E+00	1.52E-06	0.00E+00	0.00E+00	0.00E+00	0.00E+00	0.00E+00	0.00E+00	0.00E+00

TABLE C-1: HRA Emission Sources Max Hour Emisisons

Source	AERMOD Source Designation	CAS Number, Pollutant Abbreviation and Emisisons (lbs/hr)														
		1151 PAHs-w/o	9901 DieselExhPM	50000 Formaldehyde	56235 CCl4	67561 Methanol	67630 Isopropyl Alcoh	67663 Chloroform	71432 Benzene	75003 Ethyl Chloride	75014 Vinyl Chloride	75070 Acetaldehyde	75092 Methylene Chlor	75343 1,1-DiClEthane	79005 1,1,2TriClEthan	79345 TetraClEthane
Well Fugitives	VOL71	0.00E+00	0.00E+00	0.00E+00	0.00E+00	0.00E+00	0.00E+00	0.00E+00	1.52E-06	0.00E+00	0.00E+00	0.00E+00	0.00E+00	0.00E+00	0.00E+00	0.00E+00
Well Fugitives	VOL72	0.00E+00	0.00E+00	0.00E+00	0.00E+00	0.00E+00	0.00E+00	0.00E+00	1.52E-06	0.00E+00	0.00E+00	0.00E+00	0.00E+00	0.00E+00	0.00E+00	0.00E+00
Well Fugitives	VOL73	0.00E+00	0.00E+00	0.00E+00	0.00E+00	0.00E+00	0.00E+00	0.00E+00	1.52E-06	0.00E+00	0.00E+00	0.00E+00	0.00E+00	0.00E+00	0.00E+00	0.00E+00
Well Fugitives	VOL74	0.00E+00	0.00E+00	0.00E+00	0.00E+00	0.00E+00	0.00E+00	0.00E+00	1.52E-06	0.00E+00	0.00E+00	0.00E+00	0.00E+00	0.00E+00	0.00E+00	0.00E+00
Well Fugitives	VOL75	0.00E+00	0.00E+00	0.00E+00	0.00E+00	0.00E+00	0.00E+00	0.00E+00	1.52E-06	0.00E+00	0.00E+00	0.00E+00	0.00E+00	0.00E+00	0.00E+00	0.00E+00
Well Fugitives	VOL76	0.00E+00	0.00E+00	0.00E+00	0.00E+00	0.00E+00	0.00E+00	0.00E+00	1.52E-06	0.00E+00	0.00E+00	0.00E+00	0.00E+00	0.00E+00	0.00E+00	0.00E+00
Well Fugitives	VOL77	0.00E+00	0.00E+00	0.00E+00	0.00E+00	0.00E+00	0.00E+00	0.00E+00	1.52E-06	0.00E+00	0.00E+00	0.00E+00	0.00E+00	0.00E+00	0.00E+00	0.00E+00
Well Fugitives	VOL78	0.00E+00	0.00E+00	0.00E+00	0.00E+00	0.00E+00	0.00E+00	0.00E+00	1.52E-06	0.00E+00	0.00E+00	0.00E+00	0.00E+00	0.00E+00	0.00E+00	0.00E+00
Well Fugitives	VOL79	0.00E+00	0.00E+00	0.00E+00	0.00E+00	0.00E+00	0.00E+00	0.00E+00	1.52E-06	0.00E+00	0.00E+00	0.00E+00	0.00E+00	0.00E+00	0.00E+00	0.00E+00
OCP-CPF Phase 2 Oil Fugitives - 2	VOL8	0.00E+00	0.00E+00	0.00E+00	0.00E+00	4.78E-04	4.78E-04	0.00E+00	1.78E-06	0.00E+00	0.00E+00	0.00E+00	0.00E+00	0.00E+00	0.00E+00	0.00E+00
Well Fugitives	VOL80	0.00E+00	0.00E+00	0.00E+00	0.00E+00	0.00E+00	0.00E+00	0.00E+00	1.52E-06	0.00E+00	0.00E+00	0.00E+00	0.00E+00	0.00E+00	0.00E+00	0.00E+00
Well Fugitives	VOL81	0.00E+00	0.00E+00	0.00E+00	0.00E+00	0.00E+00	0.00E+00	0.00E+00	1.52E-06	0.00E+00	0.00E+00	0.00E+00	0.00E+00	0.00E+00	0.00E+00	0.00E+00
Well Fugitives	VOL82	0.00E+00	0.00E+00	0.00E+00	0.00E+00	0.00E+00	0.00E+00	0.00E+00	1.52E-06	0.00E+00	0.00E+00	0.00E+00	0.00E+00	0.00E+00	0.00E+00	0.00E+00
Well Fugitives	VOL83	0.00E+00	0.00E+00	0.00E+00	0.00E+00	0.00E+00	0.00E+00	0.00E+00	1.52E-06	0.00E+00	0.00E+00	0.00E+00	0.00E+00	0.00E+00	0.00E+00	0.00E+00
Well Fugitives	VOL84	0.00E+00	0.00E+00	0.00E+00	0.00E+00	0.00E+00	0.00E+00	0.00E+00	1.52E-06	0.00E+00	0.00E+00	0.00E+00	0.00E+00	0.00E+00	0.00E+00	0.00E+00
Well Fugitives	VOL85	0.00E+00	0.00E+00	0.00E+00	0.00E+00	0.00E+00	0.00E+00	0.00E+00	1.52E-06	0.00E+00	0.00E+00	0.00E+00	0.00E+00	0.00E+00	0.00E+00	0.00E+00
Well Fugitives	VOL86	0.00E+00	0.00E+00	0.00E+00	0.00E+00	0.00E+00	0.00E+00	0.00E+00	1.52E-06	0.00E+00	0.00E+00	0.00E+00	0.00E+00	0.00E+00	0.00E+00	0.00E+00
Well Fugitives	VOL87	0.00E+00	0.00E+00	0.00E+00	0.00E+00	0.00E+00	0.00E+00	0.00E+00	1.52E-06	0.00E+00	0.00E+00	0.00E+00	0.00E+00	0.00E+00	0.00E+00	0.00E+00
Well Fugitives	VOL88	0.00E+00	0.00E+00	0.00E+00	0.00E+00	0.00E+00	0.00E+00	0.00E+00	1.52E-06	0.00E+00	0.00E+00	0.00E+00	0.00E+00	0.00E+00	0.00E+00	0.00E+00
Well Fugitives	VOL89	0.00E+00	0.00E+00	0.00E+00	0.00E+00	0.00E+00	0.00E+00	0.00E+00	1.52E-06	0.00E+00	0.00E+00	0.00E+00	0.00E+00	0.00E+00	0.00E+00	0.00E+00
OCP-CPF Phase 2 Oil Fugitives - 3	VOL9	0.00E+00	0.00E+00	0.00E+00	0.00E+00	4.78E-04	4.78E-04	0.00E+00	1.78E-06	0.00E+00	0.00E+00	0.00E+00	0.00E+00	0.00E+00	0.00E+00	0.00E+00
Well Fugitives	VOL90	0.00E+00	0.00E+00	0.00E+00	0.00E+00	0.00E+00	0.00E+00	0.00E+00	1.52E-06	0.00E+00	0.00E+00	0.00E+00	0.00E+00	0.00E+00	0.00E+00	0.00E+00
Well Fugitives	VOL91	0.00E+00	0.00E+00	0.00E+00	0.00E+00	0.00E+00	0.00E+00	0.00E+00	1.52E-06	0.00E+00	0.00E+00	0.00E+00	0.00E+00	0.00E+00	0.00E+00	0.00E+00
Well Fugitives	VOL92	0.00E+00	0.00E+00	0.00E+00	0.00E+00	0.00E+00	0.00E+00	0.00E+00	1.52E-06	0.00E+00	0.00E+00	0.00E+00	0.00E+00	0.00E+00	0.00E+00	0.00E+00
Well Fugitives	VOL93	0.00E+00	0.00E+00	0.00E+00	0.00E+00	0.00E+00	0.00E+00	0.00E+00	1.52E-06	0.00E+00	0.00E+00	0.00E+00	0.00E+00	0.00E+00	0.00E+00	0.00E+00
Well Fugitives	VOL94	0.00E+00	0.00E+00	0.00E+00	0.00E+00	0.00E+00	0.00E+00	0.00E+00	1.52E-06	0.00E+00	0.00E+00	0.00E+00	0.00E+00	0.00E+00	0.00E+00	0.00E+00
Well Fugitives	VOL95	0.00E+00	0.00E+00	0.00E+00	0.00E+00	0.00E+00	0.00E+00	0.00E+00	1.52E-06	0.00E+00	0.00E+00	0.00E+00	0.00E+00	0.00E+00	0.00E+00	0.00E+00
Well Fugitives	VOL96	0.00E+00	0.00E+00	0.00E+00	0.00E+00	0.00E+00	0.00E+00	0.00E+00	1.52E-06	0.00E+00	0.00E+00	0.00E+00	0.00E+00	0.00E+00	0.00E+00	0.00E+00
Well Fugitives	VOL97	0.00E+00	0.00E+00	0.00E+00	0.00E+00	0.00E+00	0.00E+00	0.00E+00	1.52E-06	0.00E+00	0.00E+00	0.00E+00	0.00E+00	0.00E+00	0.00E+00	0.00E+00
Well Fugitives	VOL98	0.00E+00	0.00E+00	0.00E+00	0.00E+00	0.00E+00	0.00E+00	0.00E+00	1.52E-06	0.00E+00	0.00E+00	0.00E+00	0.00E+00	0.00E+00	0.00E+00	0.00E+00
Well Fugitives	VOL99	0.00E+00	0.00E+00	0.00E+00	0.00E+00	0.00E+00	0.00E+00	0.00E+00	1.52E-06	0.00E+00	0.00E+00	0.00E+00	0.00E+00	0.00E+00	0.00E+00	0.00E+00

TABLE C-1: HRA Emission Sources Max Hour Emisisons

Source	AERMOD Source Designation	CAS Number, Pollutant Abbreviation and Emisisons (lbs/hr)														
		91203 Naphthalene	100414 Ethyl Benzene	100425 Styrene	106898 Epichlorohydrin	106934 EDB	106990 1,3-Butadiene	107028 Acrolein	107982 PGME	108883 Toluene	108907 Chlorobenzn	108952 Phenol	110543 Hexane	115071 Propylene	205992 B[b]fluoranthen	218019 Chrysene
Truck Travel	SLINE1	0.00E+00	0.00E+00	0.00E+00	0.00E+00	0.00E+00	0.00E+00	0.00E+00	0.00E+00	0.00E+00	0.00E+00	0.00E+00	0.00E+00	0.00E+00	0.00E+00	0.00E+00
10,000 Barrel 1	STCK1	0.00E+00	0.00E+00	0.00E+00	0.00E+00	0.00E+00	0.00E+00	0.00E+00	0.00E+00	1.21E-03	0.00E+00	0.00E+00	8.49E-03	0.00E+00	0.00E+00	0.00E+00
85 MMBtu SG 3	STCK10	2.43E-05	5.58E-04	0.00E+00	0.00E+00	0.00E+00	0.00E+00	2.18E-04	0.00E+00	2.14E-03	0.00E+00	0.00E+00	3.72E-04	4.29E-02	0.00E+00	0.00E+00
85 MMBtu SG 4	STCK11	2.43E-05	5.58E-04	0.00E+00	0.00E+00	0.00E+00	0.00E+00	2.18E-04	0.00E+00	2.14E-03	0.00E+00	0.00E+00	3.72E-04	4.29E-02	0.00E+00	0.00E+00
85 MMBtu SG 5	STCK12	2.43E-05	5.58E-04	0.00E+00	0.00E+00	0.00E+00	0.00E+00	2.18E-04	0.00E+00	2.14E-03	0.00E+00	0.00E+00	3.72E-04	4.29E-02	0.00E+00	0.00E+00
85 MMBtu SG 6	STCK13	2.43E-05	5.58E-04	0.00E+00	0.00E+00	0.00E+00	0.00E+00	2.18E-04	0.00E+00	2.14E-03	0.00E+00	0.00E+00	3.72E-04	4.29E-02	0.00E+00	0.00E+00
Generator	STCK14	1.53E-04	8.15E-05	4.85E-05	0.00E+00	9.10E-05	5.48E-04	1.06E-02	0.00E+00	8.38E-04	6.24E-05	4.93E-05	2.28E-03	0.00E+00	3.41E-07	1.42E-06
Emergency Flare	STCK15	4.19E-04	5.50E-02	0.00E+00	0.00E+00	0.00E+00	0.00E+00	3.81E-04	0.00E+00	2.21E-03	0.00E+00	0.00E+00	1.10E-03	9.30E-02	0.00E+00	0.00E+00
100 Barrel 1	STCK16	0.00E+00	0.00E+00	0.00E+00	0.00E+00	0.00E+00	0.00E+00	0.00E+00	0.00E+00	6.59E-06	0.00E+00	0.00E+00	4.61E-05	0.00E+00	0.00E+00	0.00E+00
100 Barrel 2	STCK17	0.00E+00	0.00E+00	0.00E+00	0.00E+00	0.00E+00	0.00E+00	0.00E+00	0.00E+00	6.59E-06	0.00E+00	0.00E+00	4.61E-05	0.00E+00	0.00E+00	0.00E+00
1,000 BBL Skim Tank 2	STCK18	0.00E+00	0.00E+00	0.00E+00	0.00E+00	0.00E+00	0.00E+00	0.00E+00	0.00E+00	2.70E-04	0.00E+00	0.00E+00	1.89E-03	0.00E+00	0.00E+00	0.00E+00
1,000 BBL Sludge Tank 2	STCK19	0.00E+00	0.00E+00	0.00E+00	0.00E+00	0.00E+00	0.00E+00	0.00E+00	0.00E+00	1.05E-04	0.00E+00	0.00E+00	7.38E-04	0.00E+00	0.00E+00	0.00E+00
10,000 Barrel 2	STCK2	0.00E+00	0.00E+00	0.00E+00	0.00E+00	0.00E+00	0.00E+00	0.00E+00	0.00E+00	1.21E-03	0.00E+00	0.00E+00	8.49E-03	0.00E+00	0.00E+00	0.00E+00
6,500 Barrel 1	STCK3	0.00E+00	0.00E+00	0.00E+00	0.00E+00	0.00E+00	0.00E+00	0.00E+00	0.00E+00	2.35E-03	0.00E+00	0.00E+00	1.64E-02	0.00E+00	0.00E+00	0.00E+00
6,500 Barrel 2	STCK4	0.00E+00	0.00E+00	0.00E+00	0.00E+00	0.00E+00	0.00E+00	0.00E+00	0.00E+00	2.35E-03	0.00E+00	0.00E+00	1.64E-02	0.00E+00	0.00E+00	0.00E+00
1,000 BBL Skim Tank 1	STCK5	0.00E+00	0.00E+00	0.00E+00	0.00E+00	0.00E+00	0.00E+00	0.00E+00	0.00E+00	2.70E-04	0.00E+00	0.00E+00	1.89E-03	0.00E+00	0.00E+00	0.00E+00
1,000 BBL Sludge Tank 1	STCK6	0.00E+00	0.00E+00	0.00E+00	0.00E+00	0.00E+00	0.00E+00	0.00E+00	0.00E+00	1.05E-04	0.00E+00	0.00E+00	7.38E-04	0.00E+00	0.00E+00	0.00E+00
62.5 MMBtu SG	STCK7	1.79E-05	4.11E-04	0.00E+00	0.00E+00	0.00E+00	0.00E+00	1.61E-04	0.00E+00	1.58E-03	0.00E+00	0.00E+00	2.74E-04	3.16E-02	0.00E+00	0.00E+00
85 MMBtu SG 1	STCK8	2.43E-05	5.58E-04	0.00E+00	0.00E+00	0.00E+00	0.00E+00	2.18E-04	0.00E+00	2.14E-03	0.00E+00	0.00E+00	3.72E-04	4.29E-02	0.00E+00	0.00E+00
85 MMBtu SG 2	STCK9	2.43E-05	5.58E-04	0.00E+00	0.00E+00	0.00E+00	0.00E+00	2.18E-04	0.00E+00	2.14E-03	0.00E+00	0.00E+00	3.72E-04	4.29E-02	0.00E+00	0.00E+00
OCP-CPF Phase 1 Oil Fugitives - 1	VOL1	0.00E+00	1.13E-04	0.00E+00	1.41E-05	0.00E+00	0.00E+00	0.00E+00	6.67E-06	0.00E+00	0.00E+00	0.00E+00	2.04E-04	0.00E+00	0.00E+00	0.00E+00
OCP-CPF Phase 2 Gas Fugitives - 1	VOL10	0.00E+00	1.13E-04	0.00E+00	1.41E-05	0.00E+00	0.00E+00	0.00E+00	6.67E-06	0.00E+00	0.00E+00	0.00E+00	3.16E-03	0.00E+00	0.00E+00	0.00E+00
Well Fugitives	VOL100	0.00E+00	0.00E+00	0.00E+00	0.00E+00	0.00E+00	0.00E+00	0.00E+00	0.00E+00	0.00E+00	0.00E+00	0.00E+00	1.51E-04	0.00E+00	0.00E+00	0.00E+00
Well Fugitives	VOL101	0.00E+00	0.00E+00	0.00E+00	0.00E+00	0.00E+00	0.00E+00	0.00E+00	0.00E+00	0.00E+00	0.00E+00	0.00E+00	1.51E-04	0.00E+00	0.00E+00	0.00E+00
Well Fugitives	VOL102	0.00E+00	0.00E+00	0.00E+00	0.00E+00	0.00E+00	0.00E+00	0.00E+00	0.00E+00	0.00E+00	0.00E+00	0.00E+00	1.51E-04	0.00E+00	0.00E+00	0.00E+00
Well Fugitives	VOL103	0.00E+00	0.00E+00	0.00E+00	0.00E+00	0.00E+00	0.00E+00	0.00E+00	0.00E+00	0.00E+00	0.00E+00	0.00E+00	1.51E-04	0.00E+00	0.00E+00	0.00E+00
Well Fugitives	VOL104	0.00E+00	0.00E+00	0.00E+00	0.00E+00	0.00E+00	0.00E+00	0.00E+00	0.00E+00	0.00E+00	0.00E+00	0.00E+00	1.51E-04	0.00E+00	0.00E+00	0.00E+00
Well Fugitives	VOL105	0.00E+00	0.00E+00	0.00E+00	0.00E+00	0.00E+00	0.00E+00	0.00E+00	0.00E+00	0.00E+00	0.00E+00	0.00E+00	1.51E-04	0.00E+00	0.00E+00	0.00E+00
Well Fugitives	VOL106	0.00E+00	0.00E+00	0.00E+00	0.00E+00	0.00E+00	0.00E+00	0.00E+00	0.00E+00	0.00E+00	0.00E+00	0.00E+00	1.51E-04	0.00E+00	0.00E+00	0.00E+00
Well Fugitives	VOL107	0.00E+00	0.00E+00	0.00E+00	0.00E+00	0.00E+00	0.00E+00	0.00E+00	0.00E+00	0.00E+00	0.00E+00	0.00E+00	1.51E-04	0.00E+00	0.00E+00	0.00E+00
Well Fugitives	VOL108	0.00E+00	0.00E+00	0.00E+00	0.00E+00	0.00E+00	0.00E+00	0.00E+00	0.00E+00	0.00E+00	0.00E+00	0.00E+00	1.51E-04	0.00E+00	0.00E+00	0.00E+00
Well Fugitives	VOL109	0.00E+00	0.00E+00	0.00E+00	0.00E+00	0.00E+00	0.00E+00	0.00E+00	0.00E+00	0.00E+00	0.00E+00	0.00E+00	1.51E-04	0.00E+00	0.00E+00	0.00E+00
OCP-CPF Phase 2 Gas Fugitives - 2	VOL11	0.00E+00	1.13E-04	0.00E+00	1.41E-05	0.00E+00	0.00E+00	0.00E+00	6.67E-06	0.00E+00	0.00E+00	0.00E+00	3.16E-03	0.00E+00	0.00E+00	0.00E+00
Well Fugitives	VOL110	0.00E+00	0.00E+00	0.00E+00	0.00E+00	0.00E+00	0.00E+00	0.00E+00	0.00E+00	0.00E+00	0.00E+00	0.00E+00	1.51E-04	0.00E+00	0.00E+00	0.00E+00
Well Fugitives	VOL111	0.00E+00	0.00E+00	0.00E+00	0.00E+00	0.00E+00	0.00E+00	0.00E+00	0.00E+00	0.00E+00	0.00E+00	0.00E+00	1.51E-04	0.00E+00	0.00E+00	0.00E+00
Well Fugitives	VOL112	0.00E+00	0.00E+00	0.00E+00	0.00E+00	0.00E+00	0.00E+00	0.00E+00	0.00E+00	0.00E+00	0.00E+00	0.00E+00	1.51E-04	0.00E+00	0.00E+00	0.00E+00
Well Fugitives	VOL113	0.00E+00	0.00E+00	0.00E+00	0.00E+00	0.00E+00	0.00E+00	0.00E+00	0.00E+00	0.00E+00	0.00E+00	0.00E+00	1.51E-04	0.00E+00	0.00E+00	0.00E+00
Well Fugitives	VOL114	0.00E+00	0.00E+00	0.00E+00	0.00E+00	0.00E+00	0.00E+00	0.00E+00	0.00E+00	0.00E+00	0.00E+00	0.00E+00	1.51E-04	0.00E+00	0.00E+00	0.00E+00
Well Fugitives	VOL115	0.00E+00	0.00E+00	0.00E+00	0.00E+00	0.00E+00	0.00E+00	0.00E+00	0.00E+00	0.00E+00	0.00E+00	0.00E+00	1.51E-04	0.00E+00	0.00E+00	0.00E+00
Well Fugitives	VOL116	0.00E+00	0.00E+00	0.00E+00	0.00E+00	0.00E+00	0.00E+00	0.00E+00	0.00E+00	0.00E+00	0.00E+00	0.00E+00	1.51E-04	0.00E+00	0.00E+00	0.00E+00
Well Fugitives	VOL117	0.00E+00	0.00E+00	0.00E+00	0.00E+00	0.00E+00	0.00E+00	0.00E+00	0.00E+00	0.00E+00	0.00E+00	0.00E+00	1.51E-04	0.00E+00	0.00E+00	0.00E+00
Well Fugitives	VOL118	0.00E+00	0.00E+00	0.00E+00	0.00E+00	0.00E+00	0.00E+00	0.00E+00	0.00E+00	0.00E+00	0.00E+00	0.00E+00	1.51E-04	0.00E+00	0.00E+00	0.00E+00
Well Fugitives	VOL119	0.00E+00	0.00E+00	0.00E+00	0.00E+00	0.00E+00	0.00E+00	0.00E+00	0.00E+00	0.00E+00	0.00E+00	0.00E+00	1.51E-04	0.00E+00	0.00E+00	0.00E+00
OCP-CPF Phase 2 Gas Fugitives - 3	VOL12	0.00E+00	1.13E-04	0.00E+00	1.41E-05	0.00E+00	0.00E+00	0.00E+00	6.67E-06	0.00E+00	0.00E+00	0.00E+00	3.16E-03	0.00E+00	0.00E+00	0.00E+00
Well Fugitives	VOL120	0.00E+00	0.00E+00	0.00E+00	0.00E+00	0.00E+00	0.00E+00	0.00E+00	0.00E+00	0.00E+00	0.00E+00	0.00E+00	1.51E-04	0.00E+00	0.00E+00	0.00E+00
Well Fugitives	VOL121	0.00E+00	0.00E+00	0.00E+00	0.00E+00	0.00E+00	0.00E+00	0.00E+00	0.00E+00	0.00E+00	0.00E+00	0.00E+00	1.51E-04	0.00E+00	0.00E+00	0.00E+00
Well Fugitives	VOL122	0.00E+00	0.00E+00	0.00E+00	0.00E+00	0.00E+00	0.00E+00	0.00E+00	0.00E+00	0.00E+00	0.00E+00	0.00E+00	1.51E-04	0.00E+00	0.00E+00	0.00E+00
Well Fugitives	VOL123	0.00E+00	0.00E+00	0.00E+00	0.00E+00	0.00E+00	0.00E+00	0.00E+00	0.00E+00	0.00E+00	0.00E+00	0.00E+00	1.51E-04	0.00E+00	0.00E+00	0.00E+00
Well Fugitives	VOL124	0.00E+00	0.00E+00	0.00E+00	0.00E+00	0.00E+00	0.00E+00	0.00E+00	0.00E+00	0.00E+00	0.00E+00	0.00E+00	1.51E-04	0.00E+00	0.00E+00	0.00E+00
Well Fugitives	VOL125	0.00E+00	0.00E+00	0.00E+00	0.00E+00	0.00E+00	0.00E+00	0.00E+00	0.00E+00	0.00E+00	0.00E+00	0.00E+00	1.51E-04	0.00E+00	0.00E+00	0.00E+00
Well Fugitives	VOL126	0.00E+00	0.00E+00	0.00E+00	0.00E+00	0.00E+00	0.00E+00	0.00E+00	0.00E+00	0.00E+00	0.00E+00	0.00E+00	1.51E-04	0.00E+00	0.00E+00	0.00E+00
Well Fugitives	VOL127	0.00E+00	0.00E+00	0.00E+00	0.00E+00	0.00E+00	0.00E+00	0.00E+00	0.00E+00	0.00E+00	0.00E+00	0.00E+00	1.51E-04	0.00E+00	0.00E+00	0.00E+00
Well Fugitives	VOL128	0.00E+00	0.00E+00	0.00E+00	0.00E+00	0.00E+00	0.00E+00	0.00E+00	0.00E+00	0.00E+00	0.00E+00	0.00E+00	1.51E-04	0.00E+00	0.00E+00	0.00E+00
Well Fugitives	VOL129	0.00E+00	0.00E+00	0.00E+00	0.00E+00	0.00E+00	0.00E+00	0.00E+00	0.00E+00	0.00E+00	0.00E+00	0.00E+00	1.51E-04	0.00E+00	0.00E+00	0.00E+00
SCP/CPP Oil Fugitives - 1	VOL13	0.00E+00	2.31E-04	0.00E+00	2.87E-05	0.00E+00	0.00E+00	0.00E+00	1.36E-05	0.00E+00	0.00E+00	0.00E+00	3.63E-04	0.00E+00	0.00E+00	0.00E+00
Well Fugitives	VOL130	0.00E+00	0.00E+00	0.00E+00	0.00E+00	0.00E+00	0.00E+00	0.00E+00	0.00E+00	0.00E+00	0.00E+00	0.00E+00	1.51E-04	0.00E+00	0.00E+00	0.00E+00
Well Fugitives	VOL131	0.00E+00	0.00E+00	0.00E+00	0.00E+00	0.00E+00	0.00E+00	0.00E+00	0.00E+00	0.00E+00	0.00E+00	0.00E+00	1.51E-04	0.00E+00	0.00E+00	0.00E+00
Well Fugitives	VOL132	0.00E+00	0.00E+00	0.00E+00	0.00E+00	0.00E+00	0.00E+00	0.00E+00	0.00E+00	0.00E+00	0.00E+00	0.00E+00	1.51E-04	0.00E+00	0.00E+00	0.00E+00
Well Fugitives	VOL133	0.00E+00	0.00E+00	0.00E+00	0.00E+00	0.00E+00	0.00E+00	0.00E+00	0.00E+00	0.00E+00	0.00E+00	0.00E+00	1.51E-04	0.00E+00	0.00E+00	0.00E+00
Brine Tanks Solvent Use Toxics	VOL134	0.00E+00	0.00E+00	0.00E+00	1.31E-02	0.00E+00	0.00E+00	0.00E+00	0.00E+00	0.00E+00	0.00E+00	0.00E+00	0.00E+00	0.00E+00	0.00E+00	0.00E+00
WSP Solvent Use Toxics	VOL135	0.00E+00	2.69E-04	0.00E+00	3.35E-05	0.00E+00	0.00E+00	0.00E+00	1.59E-05	0.00E+00	0.00E+00	0.00E+00	0.00E+00	0.00E+00	0.00E+00	0.00E+00
WSP Solvent Use Toxics	VOL136	0.00E+00	2.69E-04	0.00E+00	3.35E-05	0.00E+00	0.00E+00	0.00E+00	1.59E-05	0.00E+00	0.00E+00	0.00E+00	0.00E+00	0.00E+00	0.00E+00	0.00E+00
WSP Solvent Use Toxics	VOL137	0.00E+00	2.69E-04	0.00E+00	3.35E-05	0.00E+00	0.00E+00	0.00E+00	1.59E-05	0.00E+00	0.00E+00	0.00E+00	0.00E+00	0.00E+00	0.00E+00	0.00E+00
WSP Solvent Use Toxics	VOL138	0.00E+00	2.69E-04	0.00E+00	3.35E-05	0.00E+00	0.00E+00	0.00E+00	1.59E-05	0.00E+00	0.00E+00	0.00E+00	0.00E+00	0.00E+00	0.00E+00	0.00E+00
WSP Solvent Use Toxics	VOL139	0.00E+00	2.69E-04	0.00E+00	3.35E-05	0.00E+00	0.00E+00	0.00E+00	1.59E-05	0.00E+00	0.00E+00	0.00E+00	0.00E+00	0.00E+00	0.00E+00	0.00E+00

TABLE C-1: HRA Emission Sources Max Hour Emisisons

Source	AERMOD Source Designation	CAS Number, Pollutant Abbreviation and Emisisons (lbs/hr)														
		91203 Naphthalene	100414 Ethyl Benzene	100425 Styrene	106898 Epichlorohydrin	106934 EDB	106990 1,3-Butadiene	107028 Acrolein	107982 PGME	108883 Toluene	108907 Chlorobenzn	108952 Phenol	110543 Hexane	115071 Propylene	205992 B[b]fluoranthen	218019 Chrysene
SCP/CPP Oil Fugitives - 2	VOL14	0.00E+00	2.31E-04	0.00E+00	2.87E-05	0.00E+00	0.00E+00	0.00E+00	1.36E-05	0.00E+00	0.00E+00	0.00E+00	3.63E-04	0.00E+00	0.00E+00	0.00E+00
SCP/CPP Oil Fugitives - 3	VOL15	0.00E+00	2.31E-04	0.00E+00	2.87E-05	0.00E+00	0.00E+00	0.00E+00	1.36E-05	0.00E+00	0.00E+00	0.00E+00	3.63E-04	0.00E+00	0.00E+00	0.00E+00
SCP/CPP Oil Fugitives - 4	VOL16	0.00E+00	2.31E-04	0.00E+00	2.87E-05	0.00E+00	0.00E+00	0.00E+00	1.36E-05	0.00E+00	0.00E+00	0.00E+00	3.63E-04	0.00E+00	0.00E+00	0.00E+00
SCP/CPP Oil Fugitives - 5	VOL17	0.00E+00	2.31E-04	0.00E+00	2.87E-05	0.00E+00	0.00E+00	0.00E+00	1.36E-05	0.00E+00	0.00E+00	0.00E+00	3.63E-04	0.00E+00	0.00E+00	0.00E+00
SCP/CPP Gas Fugitives - 1	VOL18	0.00E+00	2.31E-04	0.00E+00	2.87E-05	0.00E+00	0.00E+00	0.00E+00	1.36E-05	0.00E+00	0.00E+00	0.00E+00	5.92E-03	0.00E+00	0.00E+00	0.00E+00
SCP/CPP Gas Fugitives - 2	VOL19	0.00E+00	2.31E-04	0.00E+00	2.87E-05	0.00E+00	0.00E+00	0.00E+00	1.36E-05	0.00E+00	0.00E+00	0.00E+00	5.92E-03	0.00E+00	0.00E+00	0.00E+00
OCP-CPF Phase 1 Oil Fugitives - 2	VOL2	0.00E+00	1.13E-04	0.00E+00	1.41E-05	0.00E+00	0.00E+00	0.00E+00	6.67E-06	0.00E+00	0.00E+00	0.00E+00	2.04E-04	0.00E+00	0.00E+00	0.00E+00
SCP/CPP Gas Fugitives - 3	VOL20	0.00E+00	2.31E-04	0.00E+00	2.87E-05	0.00E+00	0.00E+00	0.00E+00	1.36E-05	0.00E+00	0.00E+00	0.00E+00	5.92E-03	0.00E+00	0.00E+00	0.00E+00
SCP/CPP Gas Fugitives - 4	VOL21	0.00E+00	2.31E-04	0.00E+00	2.87E-05	0.00E+00	0.00E+00	0.00E+00	1.36E-05	0.00E+00	0.00E+00	0.00E+00	5.92E-03	0.00E+00	0.00E+00	0.00E+00
SCP/CPP Gas Fugitives - 5	VOL22	0.00E+00	2.31E-04	0.00E+00	2.87E-05	0.00E+00	0.00E+00	0.00E+00	1.36E-05	0.00E+00	0.00E+00	0.00E+00	5.92E-03	0.00E+00	0.00E+00	0.00E+00
LOS/COS Oil Fugitives	VOL23	0.00E+00	9.27E-04	0.00E+00	1.15E-04	0.00E+00	0.00E+00	0.00E+00	5.48E-05	0.00E+00	0.00E+00	0.00E+00	1.01E-03	0.00E+00	0.00E+00	0.00E+00
LOS/COS Gas Fugitives	VOL24	0.00E+00	9.27E-04	0.00E+00	1.15E-04	0.00E+00	0.00E+00	0.00E+00	5.48E-05	0.00E+00	0.00E+00	0.00E+00	1.33E-02	0.00E+00	0.00E+00	0.00E+00
Phase 1 WCP Oil Fugitives - 1	VOL25	0.00E+00	1.10E-04	0.00E+00	1.37E-05	0.00E+00	0.00E+00	0.00E+00	6.50E-06	0.00E+00	0.00E+00	0.00E+00	4.14E-04	0.00E+00	0.00E+00	0.00E+00
Phase 1 WCP Oil Fugitives - 2	VOL26	0.00E+00	1.10E-04	0.00E+00	1.37E-05	0.00E+00	0.00E+00	0.00E+00	6.50E-06	0.00E+00	0.00E+00	0.00E+00	4.14E-04	0.00E+00	0.00E+00	0.00E+00
Phase 1 WCP Gas Fugitives - 1	VOL27	0.00E+00	1.10E-04	0.00E+00	1.37E-05	0.00E+00	0.00E+00	0.00E+00	6.50E-06	0.00E+00	0.00E+00	0.00E+00	2.64E-03	0.00E+00	0.00E+00	0.00E+00
Phase 1 WCP Gas Fugitives - 2	VOL28	0.00E+00	1.10E-04	0.00E+00	1.37E-05	0.00E+00	0.00E+00	0.00E+00	6.50E-06	0.00E+00	0.00E+00	0.00E+00	2.64E-03	0.00E+00	0.00E+00	0.00E+00
Phase 2 WCP Oil Fugitives - 1	VOL29	0.00E+00	1.10E-04	0.00E+00	1.37E-05	0.00E+00	0.00E+00	0.00E+00	6.50E-06	0.00E+00	0.00E+00	0.00E+00	4.14E-04	0.00E+00	0.00E+00	0.00E+00
OCP-CPF Phase 1 Oil Fugitives - 3	VOL3	0.00E+00	1.13E-04	0.00E+00	1.41E-05	0.00E+00	0.00E+00	0.00E+00	6.67E-06	0.00E+00	0.00E+00	0.00E+00	2.04E-04	0.00E+00	0.00E+00	0.00E+00
Phase 2 WCP Oil Fugitives - 2	VOL30	0.00E+00	1.10E-04	0.00E+00	1.37E-05	0.00E+00	0.00E+00	0.00E+00	6.50E-06	0.00E+00	0.00E+00	0.00E+00	4.14E-04	0.00E+00	0.00E+00	0.00E+00
Phase 2 WCP Gas Fugitives - 1	VOL31	0.00E+00	1.10E-04	0.00E+00	1.37E-05	0.00E+00	0.00E+00	0.00E+00	6.50E-06	0.00E+00	0.00E+00	0.00E+00	2.64E-03	0.00E+00	0.00E+00	0.00E+00
Phase 2 WCP Gas Fugitives - 2	VOL32	0.00E+00	1.10E-04	0.00E+00	1.37E-05	0.00E+00	0.00E+00	0.00E+00	6.50E-06	0.00E+00	0.00E+00	0.00E+00	2.64E-03	0.00E+00	0.00E+00	0.00E+00
LACT Oil Fugitives - 1	VOL33	0.00E+00	1.02E-05	0.00E+00	1.27E-06	0.00E+00	0.00E+00	0.00E+00	6.04E-07	0.00E+00	0.00E+00	0.00E+00	4.08E-04	0.00E+00	0.00E+00	0.00E+00
LACT Oil Fugitives - 2	VOL34	0.00E+00	1.02E-05	0.00E+00	1.27E-06	0.00E+00	0.00E+00	0.00E+00	6.04E-07	0.00E+00	0.00E+00	0.00E+00	2.03E-04	0.00E+00	0.00E+00	0.00E+00
LACT Oil Fugitives - 3	VOL35	0.00E+00	1.02E-05	0.00E+00	1.27E-06	0.00E+00	0.00E+00	0.00E+00	6.04E-07	0.00E+00	0.00E+00	0.00E+00	6.36E-05	0.00E+00	0.00E+00	0.00E+00
LACT Gas Fugitives - 1	VOL36	0.00E+00	1.02E-05	0.00E+00	1.27E-06	0.00E+00	0.00E+00	0.00E+00	6.04E-07	0.00E+00	0.00E+00	0.00E+00	1.05E-03	0.00E+00	0.00E+00	0.00E+00
LACT Gas Fugitives - 2	VOL37	0.00E+00	1.02E-05	0.00E+00	1.27E-06	0.00E+00	0.00E+00	0.00E+00	6.04E-07	0.00E+00	0.00E+00	0.00E+00	5.25E-04	0.00E+00	0.00E+00	0.00E+00
LACT Gas Fugitives - 3	VOL38	0.00E+00	1.02E-05	0.00E+00	1.27E-06	0.00E+00	0.00E+00	0.00E+00	6.04E-07	0.00E+00	0.00E+00	0.00E+00	0.00E+00	0.00E+00	0.00E+00	0.00E+00
Sulfurox Gas Fugitives - 1	VOL39	0.00E+00	1.97E-05	0.00E+00	2.46E-06	0.00E+00	0.00E+00	0.00E+00	1.16E-06	0.00E+00	0.00E+00	0.00E+00	1.28E-03	0.00E+00	0.00E+00	0.00E+00
OCP-CPF Phase 1 Gas Fugitives - 1	VOL4	0.00E+00	1.13E-04	0.00E+00	1.41E-05	0.00E+00	0.00E+00	0.00E+00	6.67E-06	0.00E+00	0.00E+00	0.00E+00	3.64E-03	0.00E+00	0.00E+00	0.00E+00
Sulfurox Gas Fugitives - 2	VOL40	0.00E+00	1.97E-05	0.00E+00	2.46E-06	0.00E+00	0.00E+00	0.00E+00	1.16E-06	0.00E+00	0.00E+00	0.00E+00	1.28E-03	0.00E+00	0.00E+00	0.00E+00
Sulfurox Gas Fugitives - 3	VOL41	0.00E+00	1.97E-05	0.00E+00	2.46E-06	0.00E+00	0.00E+00	0.00E+00	1.16E-06	0.00E+00	0.00E+00	0.00E+00	1.28E-03	0.00E+00	0.00E+00	0.00E+00
Sulfurox GasFugitives - 4	VOL42	0.00E+00	1.97E-05	0.00E+00	2.46E-06	0.00E+00	0.00E+00	0.00E+00	1.16E-06	0.00E+00	0.00E+00	0.00E+00	1.28E-03	0.00E+00	0.00E+00	0.00E+00
Sulfurox Gas Fugitives - 5	VOL43	0.00E+00	1.97E-05	0.00E+00	2.46E-06	0.00E+00	0.00E+00	0.00E+00	1.16E-06	0.00E+00	0.00E+00	0.00E+00	1.28E-03	0.00E+00	0.00E+00	0.00E+00
Sulfurox Gas Fugitives - 6	VOL44	0.00E+00	1.97E-05	0.00E+00	2.46E-06	0.00E+00	0.00E+00	0.00E+00	1.16E-06	0.00E+00	0.00E+00	0.00E+00	1.28E-03	0.00E+00	0.00E+00	0.00E+00
Sulfurox Gas Fugitives - 7	VOL45	0.00E+00	1.97E-05	0.00E+00	2.46E-06	0.00E+00	0.00E+00	0.00E+00	1.16E-06	0.00E+00	0.00E+00	0.00E+00	1.28E-03	0.00E+00	0.00E+00	0.00E+00
Sulfurox Gas Fugitives - 8	VOL46	0.00E+00	1.97E-05	0.00E+00	2.46E-06	0.00E+00	0.00E+00	0.00E+00	1.16E-06	0.00E+00	0.00E+00	0.00E+00	1.28E-03	0.00E+00	0.00E+00	0.00E+00
PGTP All Fugitives V-5880 P-5890 P59	VOL47	0.00E+00	5.75E-06	0.00E+00	7.16E-07	0.00E+00	0.00E+00	0.00E+00	3.39E-07	0.00E+00	0.00E+00	0.00E+00	1.99E-03	0.00E+00	0.00E+00	0.00E+00
PGTP and GS Fugitives FF-5030 FF-50	VOL48	0.00E+00	1.13E-04	0.00E+00	1.40E-05	0.00E+00	0.00E+00	0.00E+00	6.65E-06	0.00E+00	0.00E+00	0.00E+00	1.13E-02	0.00E+00	0.00E+00	0.00E+00
PGTP Fugitives P-5980 P-5990 V-5970	VOL49	0.00E+00	9.20E-05	0.00E+00	1.15E-05	0.00E+00	0.00E+00	0.00E+00	5.43E-06	0.00E+00	0.00E+00	0.00E+00	4.69E-03	0.00E+00	0.00E+00	0.00E+00
OCP-CPF Phase 1 Gas Fugitives - 2	VOL5	0.00E+00	1.13E-04	0.00E+00	1.41E-05	0.00E+00	0.00E+00	0.00E+00	6.67E-06	0.00E+00	0.00E+00	0.00E+00	3.64E-03	0.00E+00	0.00E+00	0.00E+00
PGTP Fugitives V-5670 V-5660	VOL50	0.00E+00	9.20E-05	0.00E+00	1.15E-05	0.00E+00	0.00E+00	0.00E+00	5.43E-06	0.00E+00	0.00E+00	0.00E+00	4.83E-03	0.00E+00	0.00E+00	0.00E+00
PGSG Fugitives SG-6030 V-6050	VOL51	0.00E+00	5.75E-06	0.00E+00	7.16E-07	0.00E+00	0.00E+00	0.00E+00	3.39E-07	0.00E+00	0.00E+00	0.00E+00	3.26E-03	0.00E+00	0.00E+00	0.00E+00
OCP-GS FF-1510 FF-1520 HX-1080 HX	VOL52	0.00E+00	2.66E-04	0.00E+00	3.31E-05	0.00E+00	0.00E+00	0.00E+00	1.57E-05	0.00E+00	0.00E+00	0.00E+00	1.85E-02	0.00E+00	0.00E+00	0.00E+00
Loading Rack 1	VOL53	0.00E+00	0.00E+00	0.00E+00	0.00E+00	0.00E+00	0.00E+00	0.00E+00	0.00E+00	3.80E-03	0.00E+00	0.00E+00	2.66E-02	0.00E+00	0.00E+00	0.00E+00
Loading Rack 2	VOL54	0.00E+00	0.00E+00	0.00E+00	0.00E+00	0.00E+00	0.00E+00	0.00E+00	0.00E+00	3.80E-03	0.00E+00	0.00E+00	2.66E-02	0.00E+00	0.00E+00	0.00E+00
Flare Gas Fugitives F5910	VOL55	0.00E+00	5.75E-06	0.00E+00	7.16E-07	0.00E+00	0.00E+00	0.00E+00	3.39E-07	0.00E+00	0.00E+00	0.00E+00	5.25E-04	0.00E+00	0.00E+00	0.00E+00
Well Fugitives	VOL56	0.00E+00	0.00E+00	0.00E+00	0.00E+00	0.00E+00	0.00E+00	0.00E+00	0.00E+00	0.00E+00	0.00E+00	0.00E+00	1.51E-04	0.00E+00	0.00E+00	0.00E+00
Well Fugitives	VOL57	0.00E+00	0.00E+00	0.00E+00	0.00E+00	0.00E+00	0.00E+00	0.00E+00	0.00E+00	0.00E+00	0.00E+00	0.00E+00	1.51E-04	0.00E+00	0.00E+00	0.00E+00
Well Fugitives	VOL58	0.00E+00	0.00E+00	0.00E+00	0.00E+00	0.00E+00	0.00E+00	0.00E+00	0.00E+00	0.00E+00	0.00E+00	0.00E+00	1.51E-04	0.00E+00	0.00E+00	0.00E+00
Well Fugitives	VOL59	0.00E+00	0.00E+00	0.00E+00	0.00E+00	0.00E+00	0.00E+00	0.00E+00	0.00E+00	0.00E+00	0.00E+00	0.00E+00	1.51E-04	0.00E+00	0.00E+00	0.00E+00
OCP-CPF Phase 1 Gas Fugitives - 3	VOL6	0.00E+00	1.13E-04	0.00E+00	1.41E-05	0.00E+00	0.00E+00	0.00E+00	6.67E-06	0.00E+00	0.00E+00	0.00E+00	3.64E-03	0.00E+00	0.00E+00	0.00E+00
Well Fugitives	VOL60	0.00E+00	0.00E+00	0.00E+00	0.00E+00	0.00E+00	0.00E+00	0.00E+00	0.00E+00	0.00E+00	0.00E+00	0.00E+00	1.51E-04	0.00E+00	0.00E+00	0.00E+00
Well Fugitives	VOL61	0.00E+00	0.00E+00	0.00E+00	0.00E+00	0.00E+00	0.00E+00	0.00E+00	0.00E+00	0.00E+00	0.00E+00	0.00E+00	1.51E-04	0.00E+00	0.00E+00	0.00E+00
Well Fugitives	VOL62	0.00E+00	0.00E+00	0.00E+00	0.00E+00	0.00E+00	0.00E+00	0.00E+00	0.00E+00	0.00E+00	0.00E+00	0.00E+00	1.51E-04	0.00E+00	0.00E+00	0.00E+00
Well Fugitives	VOL63	0.00E+00	0.00E+00	0.00E+00	0.00E+00	0.00E+00	0.00E+00	0.00E+00	0.00E+00	0.00E+00	0.00E+00	0.00E+00	1.51E-04	0.00E+00	0.00E+00	0.00E+00
Well Fugitives	VOL64	0.00E+00	0.00E+00	0.00E+00	0.00E+00	0.00E+00	0.00E+00	0.00E+00	0.00E+00	0.00E+00	0.00E+00	0.00E+00	1.51E-04	0.00E+00	0.00E+00	0.00E+00
Well Fugitives	VOL65	0.00E+00	0.00E+00	0.00E+00	0.00E+00	0.00E+00	0.00E+00	0.00E+00	0.00E+00	0.00E+00	0.00E+00	0.00E+00	1.51E-04	0.00E+00	0.00E+00	0.00E+00
Well Fugitives	VOL66	0.00E+00	0.00E+00	0.00E+00	0.00E+00	0.00E+00	0.00E+00	0.00E+00	0.00E+00	0.00E+00	0.00E+00	0.00E+00	1.51E-04	0.00E+00	0.00E+00	0.00E+00
Well Fugitives	VOL67	0.00E+00	0.00E+00	0.00E+00	0.00E+00	0.00E+00	0.00E+00	0.00E+00	0.00E+00	0.00E+00	0.00E+00	0.00E+00	1.51E-04	0.00E+00	0.00E+00	0.00E+00
Well Fugitives	VOL68	0.00E+00	0.00E+00	0.00E+00	0.00E+00	0.00E+00	0.00E+00	0.00E+00	0.00E+00	0.00E+00	0.00E+00	0.00E+00	1.51E-04	0.00E+00	0.00E+00	0.00E+00
Well Fugitives	VOL69	0.00E+00	0.00E+00	0.00E+00	0.00E+00	0.00E+00	0.00E+00	0.00E+00	0.00E+00	0.00E+00	0.00E+00	0.00E+00	1.51E-04	0.00E+00	0.00E+00	0.00E+00
OCP-CPF Phase 2 Oil Fugitives - 1	VOL7	0.00E+00	1.13E-04	0.00E+00	1.41E-05	0.00E+00	0.00E+00	0.00E+00	6.67E-06	0.00E+00	0.00E+00	0.00E+00	1.76E-04	0.00E+00	0.00E+00	0.00E+00
Well Fugitives	VOL70	0.00E+00	0.00E+00	0.00E+00	0.00E+00	0.00E+00	0.00E+00	0.00E+00	0.00E+00	0.00E+00	0.00E+00	0.00E+00	1.51E-04	0.00E+00	0.00E+00	0.00E+00

TABLE C-1: HRA Emission Sources Max Hour Emisisons

Source	AERMOD Source Designation	CAS Number, Pollutant Abbreviation and Emisisons (lbs/hr)														
		91203 Naphthalene	100414 Ethyl Benzene	100425 Styrene	106898 Epichlorohydrin	106934 EDB	106990 1,3-Butadiene	107028 Acrolein	107982 PGME	108883 Toluene	108907 Chlorobenzn	108952 Phenol	110543 Hexane	115071 Propylene	205992 B[b]fluoranthen	218019 Chrysene
Well Fugitives	VOL71	0.00E+00	0.00E+00	0.00E+00	0.00E+00	0.00E+00	0.00E+00	0.00E+00	0.00E+00	0.00E+00	0.00E+00	0.00E+00	1.51E-04	0.00E+00	0.00E+00	0.00E+00
Well Fugitives	VOL72	0.00E+00	0.00E+00	0.00E+00	0.00E+00	0.00E+00	0.00E+00	0.00E+00	0.00E+00	0.00E+00	0.00E+00	0.00E+00	1.51E-04	0.00E+00	0.00E+00	0.00E+00
Well Fugitives	VOL73	0.00E+00	0.00E+00	0.00E+00	0.00E+00	0.00E+00	0.00E+00	0.00E+00	0.00E+00	0.00E+00	0.00E+00	0.00E+00	1.51E-04	0.00E+00	0.00E+00	0.00E+00
Well Fugitives	VOL74	0.00E+00	0.00E+00	0.00E+00	0.00E+00	0.00E+00	0.00E+00	0.00E+00	0.00E+00	0.00E+00	0.00E+00	0.00E+00	1.51E-04	0.00E+00	0.00E+00	0.00E+00
Well Fugitives	VOL75	0.00E+00	0.00E+00	0.00E+00	0.00E+00	0.00E+00	0.00E+00	0.00E+00	0.00E+00	0.00E+00	0.00E+00	0.00E+00	1.51E-04	0.00E+00	0.00E+00	0.00E+00
Well Fugitives	VOL76	0.00E+00	0.00E+00	0.00E+00	0.00E+00	0.00E+00	0.00E+00	0.00E+00	0.00E+00	0.00E+00	0.00E+00	0.00E+00	1.51E-04	0.00E+00	0.00E+00	0.00E+00
Well Fugitives	VOL77	0.00E+00	0.00E+00	0.00E+00	0.00E+00	0.00E+00	0.00E+00	0.00E+00	0.00E+00	0.00E+00	0.00E+00	0.00E+00	1.51E-04	0.00E+00	0.00E+00	0.00E+00
Well Fugitives	VOL78	0.00E+00	0.00E+00	0.00E+00	0.00E+00	0.00E+00	0.00E+00	0.00E+00	0.00E+00	0.00E+00	0.00E+00	0.00E+00	1.51E-04	0.00E+00	0.00E+00	0.00E+00
Well Fugitives	VOL79	0.00E+00	0.00E+00	0.00E+00	0.00E+00	0.00E+00	0.00E+00	0.00E+00	0.00E+00	0.00E+00	0.00E+00	0.00E+00	1.51E-04	0.00E+00	0.00E+00	0.00E+00
OCP-CPF Phase 2 Oil Fugitives - 2	VOL8	0.00E+00	1.13E-04	0.00E+00	1.41E-05	0.00E+00	0.00E+00	0.00E+00	6.67E-06	0.00E+00	0.00E+00	0.00E+00	1.76E-04	0.00E+00	0.00E+00	0.00E+00
Well Fugitives	VOL80	0.00E+00	0.00E+00	0.00E+00	0.00E+00	0.00E+00	0.00E+00	0.00E+00	0.00E+00	0.00E+00	0.00E+00	0.00E+00	1.51E-04	0.00E+00	0.00E+00	0.00E+00
Well Fugitives	VOL81	0.00E+00	0.00E+00	0.00E+00	0.00E+00	0.00E+00	0.00E+00	0.00E+00	0.00E+00	0.00E+00	0.00E+00	0.00E+00	1.51E-04	0.00E+00	0.00E+00	0.00E+00
Well Fugitives	VOL82	0.00E+00	0.00E+00	0.00E+00	0.00E+00	0.00E+00	0.00E+00	0.00E+00	0.00E+00	0.00E+00	0.00E+00	0.00E+00	1.51E-04	0.00E+00	0.00E+00	0.00E+00
Well Fugitives	VOL83	0.00E+00	0.00E+00	0.00E+00	0.00E+00	0.00E+00	0.00E+00	0.00E+00	0.00E+00	0.00E+00	0.00E+00	0.00E+00	1.51E-04	0.00E+00	0.00E+00	0.00E+00
Well Fugitives	VOL84	0.00E+00	0.00E+00	0.00E+00	0.00E+00	0.00E+00	0.00E+00	0.00E+00	0.00E+00	0.00E+00	0.00E+00	0.00E+00	1.51E-04	0.00E+00	0.00E+00	0.00E+00
Well Fugitives	VOL85	0.00E+00	0.00E+00	0.00E+00	0.00E+00	0.00E+00	0.00E+00	0.00E+00	0.00E+00	0.00E+00	0.00E+00	0.00E+00	1.51E-04	0.00E+00	0.00E+00	0.00E+00
Well Fugitives	VOL86	0.00E+00	0.00E+00	0.00E+00	0.00E+00	0.00E+00	0.00E+00	0.00E+00	0.00E+00	0.00E+00	0.00E+00	0.00E+00	1.51E-04	0.00E+00	0.00E+00	0.00E+00
Well Fugitives	VOL87	0.00E+00	0.00E+00	0.00E+00	0.00E+00	0.00E+00	0.00E+00	0.00E+00	0.00E+00	0.00E+00	0.00E+00	0.00E+00	1.51E-04	0.00E+00	0.00E+00	0.00E+00
Well Fugitives	VOL88	0.00E+00	0.00E+00	0.00E+00	0.00E+00	0.00E+00	0.00E+00	0.00E+00	0.00E+00	0.00E+00	0.00E+00	0.00E+00	1.51E-04	0.00E+00	0.00E+00	0.00E+00
Well Fugitives	VOL89	0.00E+00	0.00E+00	0.00E+00	0.00E+00	0.00E+00	0.00E+00	0.00E+00	0.00E+00	0.00E+00	0.00E+00	0.00E+00	1.51E-04	0.00E+00	0.00E+00	0.00E+00
OCP-CPF Phase 2 Oil Fugitives - 3	VOL9	0.00E+00	1.13E-04	0.00E+00	1.41E-05	0.00E+00	0.00E+00	0.00E+00	6.67E-06	0.00E+00	0.00E+00	0.00E+00	1.76E-04	0.00E+00	0.00E+00	0.00E+00
Well Fugitives	VOL90	0.00E+00	0.00E+00	0.00E+00	0.00E+00	0.00E+00	0.00E+00	0.00E+00	0.00E+00	0.00E+00	0.00E+00	0.00E+00	1.51E-04	0.00E+00	0.00E+00	0.00E+00
Well Fugitives	VOL91	0.00E+00	0.00E+00	0.00E+00	0.00E+00	0.00E+00	0.00E+00	0.00E+00	0.00E+00	0.00E+00	0.00E+00	0.00E+00	1.51E-04	0.00E+00	0.00E+00	0.00E+00
Well Fugitives	VOL92	0.00E+00	0.00E+00	0.00E+00	0.00E+00	0.00E+00	0.00E+00	0.00E+00	0.00E+00	0.00E+00	0.00E+00	0.00E+00	1.51E-04	0.00E+00	0.00E+00	0.00E+00
Well Fugitives	VOL93	0.00E+00	0.00E+00	0.00E+00	0.00E+00	0.00E+00	0.00E+00	0.00E+00	0.00E+00	0.00E+00	0.00E+00	0.00E+00	1.51E-04	0.00E+00	0.00E+00	0.00E+00
Well Fugitives	VOL94	0.00E+00	0.00E+00	0.00E+00	0.00E+00	0.00E+00	0.00E+00	0.00E+00	0.00E+00	0.00E+00	0.00E+00	0.00E+00	1.51E-04	0.00E+00	0.00E+00	0.00E+00
Well Fugitives	VOL95	0.00E+00	0.00E+00	0.00E+00	0.00E+00	0.00E+00	0.00E+00	0.00E+00	0.00E+00	0.00E+00	0.00E+00	0.00E+00	1.51E-04	0.00E+00	0.00E+00	0.00E+00
Well Fugitives	VOL96	0.00E+00	0.00E+00	0.00E+00	0.00E+00	0.00E+00	0.00E+00	0.00E+00	0.00E+00	0.00E+00	0.00E+00	0.00E+00	1.51E-04	0.00E+00	0.00E+00	0.00E+00
Well Fugitives	VOL97	0.00E+00	0.00E+00	0.00E+00	0.00E+00	0.00E+00	0.00E+00	0.00E+00	0.00E+00	0.00E+00	0.00E+00	0.00E+00	1.51E-04	0.00E+00	0.00E+00	0.00E+00
Well Fugitives	VOL98	0.00E+00	0.00E+00	0.00E+00	0.00E+00	0.00E+00	0.00E+00	0.00E+00	0.00E+00	0.00E+00	0.00E+00	0.00E+00	1.51E-04	0.00E+00	0.00E+00	0.00E+00
Well Fugitives	VOL99	0.00E+00	0.00E+00	0.00E+00	0.00E+00	0.00E+00	0.00E+00	0.00E+00	0.00E+00	0.00E+00	0.00E+00	0.00E+00	1.51E-04	0.00E+00	0.00E+00	0.00E+00

TABLE C-1: HRA Emission Sources Max Hour Emisisons

Source	AERMOD Source Designation	CAS Number, Pollutant Abbreviation and Emisisons (lbs/hr)														
		1330207 Xylenes	7439965 Manganese	7439976 Mercury	7440020 Nickel	7440382 Arsenic	7440393 Barium	7440417 Beryllium	7440439 Cadmium	7440473 Chromium	7440484 Cobalt	7440508 Copper	7440622 Vanadium	7440666 Zinc	7782492 Selenium	7783064 H2S
Truck Travel	SLINE1	0.00E+00	0.00E+00	0.00E+00	0.00E+00	0.00E+00	0.00E+00	0.00E+00	0.00E+00	0.00E+00	0.00E+00	0.00E+00	0.00E+00	0.00E+00	0.00E+00	0.00E+00
10,000 Barrel 1	STCK1	0.00E+00	0.00E+00	0.00E+00	0.00E+00	0.00E+00	0.00E+00	0.00E+00	0.00E+00	0.00E+00	0.00E+00	0.00E+00	0.00E+00	0.00E+00	0.00E+00	3.83E-06
85 MMBtu SG 3	STCK10	1.60E-03	3.17E-05	2.17E-05	1.75E-04	1.67E-05	3.66E-04	9.95E-07	9.18E-05	1.16E-04	7.00E-06	7.08E-05	1.91E-04	2.41E-03	2.00E-06	0.00E+00
85 MMBtu SG 4	STCK11	1.60E-03	3.17E-05	2.17E-05	1.75E-04	1.67E-05	3.66E-04	9.95E-07	9.18E-05	1.16E-04	7.00E-06	7.08E-05	1.91E-04	2.41E-03	2.00E-06	0.00E+00
85 MMBtu SG 5	STCK12	1.60E-03	3.17E-05	2.17E-05	1.75E-04	1.67E-05	3.66E-04	9.95E-07	9.18E-05	1.16E-04	7.00E-06	7.08E-05	1.91E-04	2.41E-03	2.00E-06	0.00E+00
85 MMBtu SG 6	STCK13	1.60E-03	3.17E-05	2.17E-05	1.75E-04	1.67E-05	3.66E-04	9.95E-07	9.18E-05	1.16E-04	7.00E-06	7.08E-05	1.91E-04	2.41E-03	2.00E-06	0.00E+00
Generator	STCK14	3.78E-04	0.00E+00	0.00E+00	0.00E+00	0.00E+00	0.00E+00	0.00E+00	0.00E+00	0.00E+00	0.00E+00	0.00E+00	0.00E+00	0.00E+00	0.00E+00	0.00E+00
Emergency Flare	STCK15	1.10E-03	0.00E+00	0.00E+00	0.00E+00	0.00E+00	0.00E+00	0.00E+00	0.00E+00	0.00E+00	0.00E+00	0.00E+00	0.00E+00	0.00E+00	0.00E+00	0.00E+00
100 Barrel 1	STCK16	0.00E+00	0.00E+00	0.00E+00	0.00E+00	0.00E+00	0.00E+00	0.00E+00	0.00E+00	0.00E+00	0.00E+00	0.00E+00	0.00E+00	0.00E+00	0.00E+00	2.08E-08
100 Barrel 2	STCK17	0.00E+00	0.00E+00	0.00E+00	0.00E+00	0.00E+00	0.00E+00	0.00E+00	0.00E+00	0.00E+00	0.00E+00	0.00E+00	0.00E+00	0.00E+00	0.00E+00	2.08E-08
1,000 BBL Skim Tank 2	STCK18	0.00E+00	0.00E+00	0.00E+00	0.00E+00	0.00E+00	0.00E+00	0.00E+00	0.00E+00	0.00E+00	0.00E+00	0.00E+00	0.00E+00	0.00E+00	0.00E+00	8.54E-07
1,000 BBL Sludge Tank 2	STCK19	0.00E+00	0.00E+00	0.00E+00	0.00E+00	0.00E+00	0.00E+00	0.00E+00	0.00E+00	0.00E+00	0.00E+00	0.00E+00	0.00E+00	0.00E+00	0.00E+00	3.33E-07
10,000 Barrel 2	STCK2	0.00E+00	0.00E+00	0.00E+00	0.00E+00	0.00E+00	0.00E+00	0.00E+00	0.00E+00	0.00E+00	0.00E+00	0.00E+00	0.00E+00	0.00E+00	0.00E+00	3.83E-06
6,500 Barrel 1	STCK3	0.00E+00	0.00E+00	0.00E+00	0.00E+00	0.00E+00	0.00E+00	0.00E+00	0.00E+00	0.00E+00	0.00E+00	0.00E+00	0.00E+00	0.00E+00	0.00E+00	7.42E-06
6,500 Barrel 2	STCK4	0.00E+00	0.00E+00	0.00E+00	0.00E+00	0.00E+00	0.00E+00	0.00E+00	0.00E+00	0.00E+00	0.00E+00	0.00E+00	0.00E+00	0.00E+00	0.00E+00	7.42E-06
1,000 BBL Skim Tank 1	STCK5	0.00E+00	0.00E+00	0.00E+00	0.00E+00	0.00E+00	0.00E+00	0.00E+00	0.00E+00	0.00E+00	0.00E+00	0.00E+00	0.00E+00	0.00E+00	0.00E+00	8.54E-07
1,000 BBL Sludge Tank 1	STCK6	0.00E+00	0.00E+00	0.00E+00	0.00E+00	0.00E+00	0.00E+00	0.00E+00	0.00E+00	0.00E+00	0.00E+00	0.00E+00	0.00E+00	0.00E+00	0.00E+00	3.33E-07
62.5 MMBtu SG	STCK7	1.18E-03	2.33E-05	1.59E-05	1.29E-04	1.23E-05	2.69E-04	7.31E-07	6.75E-05	8.56E-05	5.15E-06	5.21E-05	1.41E-04	1.78E-03	1.47E-06	0.00E+00
85 MMBtu SG 1	STCK8	1.60E-03	3.17E-05	2.17E-05	1.75E-04	1.67E-05	3.66E-04	9.95E-07	9.18E-05	1.16E-04	7.00E-06	7.08E-05	1.91E-04	2.41E-03	2.00E-06	0.00E+00
85 MMBtu SG 2	STCK9	1.60E-03	3.17E-05	2.17E-05	1.75E-04	1.67E-05	3.66E-04	9.95E-07	9.18E-05	1.16E-04	7.00E-06	7.08E-05	1.91E-04	2.41E-03	2.00E-06	0.00E+00
OCP-CPF Phase 1 Oil Fugitives - 1	VOL1	4.39E-04	0.00E+00	0.00E+00	0.00E+00	0.00E+00	0.00E+00	0.00E+00	0.00E+00	0.00E+00	0.00E+00	0.00E+00	0.00E+00	0.00E+00	0.00E+00	3.17E-08
OCP-CPF Phase 2 Gas Fugitives - 1	VOL10	4.39E-04	0.00E+00	0.00E+00	0.00E+00	0.00E+00	0.00E+00	0.00E+00	0.00E+00	0.00E+00	0.00E+00	0.00E+00	0.00E+00	0.00E+00	0.00E+00	1.41E-06
Well Fugitives	VOL100	0.00E+00	0.00E+00	0.00E+00	0.00E+00	0.00E+00	0.00E+00	0.00E+00	0.00E+00	0.00E+00	0.00E+00	0.00E+00	0.00E+00	0.00E+00	0.00E+00	1.18E-04
Well Fugitives	VOL101	0.00E+00	0.00E+00	0.00E+00	0.00E+00	0.00E+00	0.00E+00	0.00E+00	0.00E+00	0.00E+00	0.00E+00	0.00E+00	0.00E+00	0.00E+00	0.00E+00	1.18E-04
Well Fugitives	VOL102	0.00E+00	0.00E+00	0.00E+00	0.00E+00	0.00E+00	0.00E+00	0.00E+00	0.00E+00	0.00E+00	0.00E+00	0.00E+00	0.00E+00	0.00E+00	0.00E+00	1.18E-04
Well Fugitives	VOL103	0.00E+00	0.00E+00	0.00E+00	0.00E+00	0.00E+00	0.00E+00	0.00E+00	0.00E+00	0.00E+00	0.00E+00	0.00E+00	0.00E+00	0.00E+00	0.00E+00	1.18E-04
Well Fugitives	VOL104	0.00E+00	0.00E+00	0.00E+00	0.00E+00	0.00E+00	0.00E+00	0.00E+00	0.00E+00	0.00E+00	0.00E+00	0.00E+00	0.00E+00	0.00E+00	0.00E+00	1.18E-04
Well Fugitives	VOL105	0.00E+00	0.00E+00	0.00E+00	0.00E+00	0.00E+00	0.00E+00	0.00E+00	0.00E+00	0.00E+00	0.00E+00	0.00E+00	0.00E+00	0.00E+00	0.00E+00	1.18E-04
Well Fugitives	VOL106	0.00E+00	0.00E+00	0.00E+00	0.00E+00	0.00E+00	0.00E+00	0.00E+00	0.00E+00	0.00E+00	0.00E+00	0.00E+00	0.00E+00	0.00E+00	0.00E+00	1.18E-04
Well Fugitives	VOL107	0.00E+00	0.00E+00	0.00E+00	0.00E+00	0.00E+00	0.00E+00	0.00E+00	0.00E+00	0.00E+00	0.00E+00	0.00E+00	0.00E+00	0.00E+00	0.00E+00	1.18E-04
Well Fugitives	VOL108	0.00E+00	0.00E+00	0.00E+00	0.00E+00	0.00E+00	0.00E+00	0.00E+00	0.00E+00	0.00E+00	0.00E+00	0.00E+00	0.00E+00	0.00E+00	0.00E+00	1.18E-04
Well Fugitives	VOL109	0.00E+00	0.00E+00	0.00E+00	0.00E+00	0.00E+00	0.00E+00	0.00E+00	0.00E+00	0.00E+00	0.00E+00	0.00E+00	0.00E+00	0.00E+00	0.00E+00	1.18E-04
OCP-CPF Phase 2 Gas Fugitives - 2	VOL11	4.39E-04	0.00E+00	0.00E+00	0.00E+00	0.00E+00	0.00E+00	0.00E+00	0.00E+00	0.00E+00	0.00E+00	0.00E+00	0.00E+00	0.00E+00	0.00E+00	1.41E-06
Well Fugitives	VOL110	0.00E+00	0.00E+00	0.00E+00	0.00E+00	0.00E+00	0.00E+00	0.00E+00	0.00E+00	0.00E+00	0.00E+00	0.00E+00	0.00E+00	0.00E+00	0.00E+00	1.18E-04
Well Fugitives	VOL111	0.00E+00	0.00E+00	0.00E+00	0.00E+00	0.00E+00	0.00E+00	0.00E+00	0.00E+00	0.00E+00	0.00E+00	0.00E+00	0.00E+00	0.00E+00	0.00E+00	1.18E-04
Well Fugitives	VOL112	0.00E+00	0.00E+00	0.00E+00	0.00E+00	0.00E+00	0.00E+00	0.00E+00	0.00E+00	0.00E+00	0.00E+00	0.00E+00	0.00E+00	0.00E+00	0.00E+00	1.18E-04
Well Fugitives	VOL113	0.00E+00	0.00E+00	0.00E+00	0.00E+00	0.00E+00	0.00E+00	0.00E+00	0.00E+00	0.00E+00	0.00E+00	0.00E+00	0.00E+00	0.00E+00	0.00E+00	1.18E-04
Well Fugitives	VOL114	0.00E+00	0.00E+00	0.00E+00	0.00E+00	0.00E+00	0.00E+00	0.00E+00	0.00E+00	0.00E+00	0.00E+00	0.00E+00	0.00E+00	0.00E+00	0.00E+00	1.18E-04
Well Fugitives	VOL115	0.00E+00	0.00E+00	0.00E+00	0.00E+00	0.00E+00	0.00E+00	0.00E+00	0.00E+00	0.00E+00	0.00E+00	0.00E+00	0.00E+00	0.00E+00	0.00E+00	1.18E-04
Well Fugitives	VOL116	0.00E+00	0.00E+00	0.00E+00	0.00E+00	0.00E+00	0.00E+00	0.00E+00	0.00E+00	0.00E+00	0.00E+00	0.00E+00	0.00E+00	0.00E+00	0.00E+00	1.18E-04
Well Fugitives	VOL117	0.00E+00	0.00E+00	0.00E+00	0.00E+00	0.00E+00	0.00E+00	0.00E+00	0.00E+00	0.00E+00	0.00E+00	0.00E+00	0.00E+00	0.00E+00	0.00E+00	1.18E-04
Well Fugitives	VOL118	0.00E+00	0.00E+00	0.00E+00	0.00E+00	0.00E+00	0.00E+00	0.00E+00	0.00E+00	0.00E+00	0.00E+00	0.00E+00	0.00E+00	0.00E+00	0.00E+00	1.18E-04
Well Fugitives	VOL119	0.00E+00	0.00E+00	0.00E+00	0.00E+00	0.00E+00	0.00E+00	0.00E+00	0.00E+00	0.00E+00	0.00E+00	0.00E+00	0.00E+00	0.00E+00	0.00E+00	1.18E-04
OCP-CPF Phase 2 Gas Fugitives - 3	VOL12	4.39E-04	0.00E+00	0.00E+00	0.00E+00	0.00E+00	0.00E+00	0.00E+00	0.00E+00	0.00E+00	0.00E+00	0.00E+00	0.00E+00	0.00E+00	0.00E+00	1.41E-06
Well Fugitives	VOL120	0.00E+00	0.00E+00	0.00E+00	0.00E+00	0.00E+00	0.00E+00	0.00E+00	0.00E+00	0.00E+00	0.00E+00	0.00E+00	0.00E+00	0.00E+00	0.00E+00	1.18E-04
Well Fugitives	VOL121	0.00E+00	0.00E+00	0.00E+00	0.00E+00	0.00E+00	0.00E+00	0.00E+00	0.00E+00	0.00E+00	0.00E+00	0.00E+00	0.00E+00	0.00E+00	0.00E+00	1.18E-04
Well Fugitives	VOL122	0.00E+00	0.00E+00	0.00E+00	0.00E+00	0.00E+00	0.00E+00	0.00E+00	0.00E+00	0.00E+00	0.00E+00	0.00E+00	0.00E+00	0.00E+00	0.00E+00	1.18E-04
Well Fugitives	VOL123	0.00E+00	0.00E+00	0.00E+00	0.00E+00	0.00E+00	0.00E+00	0.00E+00	0.00E+00	0.00E+00	0.00E+00	0.00E+00	0.00E+00	0.00E+00	0.00E+00	1.18E-04
Well Fugitives	VOL124	0.00E+00	0.00E+00	0.00E+00	0.00E+00	0.00E+00	0.00E+00	0.00E+00	0.00E+00	0.00E+00	0.00E+00	0.00E+00	0.00E+00	0.00E+00	0.00E+00	1.18E-04
Well Fugitives	VOL125	0.00E+00	0.00E+00	0.00E+00	0.00E+00	0.00E+00	0.00E+00	0.00E+00	0.00E+00	0.00E+00	0.00E+00	0.00E+00	0.00E+00	0.00E+00	0.00E+00	1.18E-04
Well Fugitives	VOL126	0.00E+00	0.00E+00	0.00E+00	0.00E+00	0.00E+00	0.00E+00	0.00E+00	0.00E+00	0.00E+00	0.00E+00	0.00E+00	0.00E+00	0.00E+00	0.00E+00	1.18E-04
Well Fugitives	VOL127	0.00E+00	0.00E+00	0.00E+00	0.00E+00	0.00E+00	0.00E+00	0.00E+00	0.00E+00	0.00E+00	0.00E+00	0.00E+00	0.00E+00	0.00E+00	0.00E+00	1.18E-04
Well Fugitives	VOL128	0.00E+00	0.00E+00	0.00E+00	0.00E+00	0.00E+00	0.00E+00	0.00E+00	0.00E+00	0.00E+00	0.00E+00	0.00E+00	0.00E+00	0.00E+00	0.00E+00	1.18E-04
Well Fugitives	VOL129	0.00E+00	0.00E+00	0.00E+00	0.00E+00	0.00E+00	0.00E+00	0.00E+00	0.00E+00	0.00E+00	0.00E+00	0.00E+00	0.00E+00	0.00E+00	0.00E+00	1.18E-04
SCP/CPP Oil Fugitives - 1	VOL13	8.96E-04	0.00E+00	0.00E+00	0.00E+00	0.00E+00	0.00E+00	0.00E+00	0.00E+00	0.00E+00	0.00E+00	0.00E+00	0.00E+00	0.00E+00	0.00E+00	5.65E-08
Well Fugitives	VOL130	0.00E+00	0.00E+00	0.00E+00	0.00E+00	0.00E+00	0.00E+00	0.00E+00	0.00E+00	0.00E+00	0.00E+00	0.00E+00	0.00E+00	0.00E+00	0.00E+00	1.18E-04
Well Fugitives	VOL131	0.00E+00	0.00E+00	0.00E+00	0.00E+00	0.00E+00	0.00E+00	0.00E+00	0.00E+00	0.00E+00	0.00E+00	0.00E+00	0.00E+00	0.00E+00	0.00E+00	1.18E-04
Well Fugitives	VOL132	0.00E+00	0.00E+00	0.00E+00	0.00E+00	0.00E+00	0.00E+00	0.00E+00	0.00E+00	0.00E+00	0.00E+00	0.00E+00	0.00E+00	0.00E+00	0.00E+00	1.18E-04
Well Fugitives	VOL133	0.00E+00	0.00E+00	0.00E+00	0.00E+00	0.00E+00	0.00E+00	0.00E+00	0.00E+00	0.00E+00	0.00E+00	0.00E+00	0.00E+00	0.00E+00	0.00E+00	1.18E-04
Brine Tanks Solvent Use Toxics	VOL134	0.00E+00	0.00E+00	0.00E+00	0.00E+00	0.00E+00	0.00E+00	0.00E+00	0.00E+00	0.00E+00	0.00E+00	0.00E+00	0.00E+00	0.00E+00	0.00E+00	0.00E+00
WSP Solvent Use Toxics	VOL135	1.05E-03	0.00E+00	0.00E+00	0.00E+00	0.00E+00	0.00E+00	0.00E+00	0.00E+00	0.00E+00	0.00E+00	0.00E+00	0.00E+00	0.00E+00	0.00E+00	0.00E+00
WSP Solvent Use Toxics	VOL136	1.05E-03	0.00E+00	0.00E+00	0.00E+00	0.00E+00	0.00E+00	0.00E+00	0.00E+00	0.00E+00	0.00E+00	0.00E+00	0.00E+00	0.00E+00	0.00E+00	0.00E+00
WSP Solvent Use Toxics	VOL137	1.05E-03	0.00E+00	0.00E+00	0.00E+00	0.00E+00	0.00E+00	0.00E+00	0.00E+00	0.00E+00	0.00E+00	0.00E+00	0.00E+00	0.00E+00	0.00E+00	0.00E+00
WSP Solvent Use Toxics	VOL138	1.05E-03	0.00E+00	0.00E+00	0.00E+00	0.00E+00	0.00E+00	0.00E+00	0.00E+00	0.00E+00	0.00E+00	0.00E+00	0.00E+00	0.00E+00	0.00E+00	0.00E+00
WSP Solvent Use Toxics	VOL139	1.05E-03	0.00E+00	0.00E+00	0.00E+00	0.00E+00	0.00E+00	0.00E+00	0.00E+00	0.00E+00	0.00E+00	0.00E+00	0.00E+00	0.00E+00	0.00E+00	0.00E+00

TABLE C-1: HRA Emission Sources Max Hour Emisisons

Source	AERMOD Source Designation	CAS Number, Pollutant Abbreviation and Emisisons (lbs/hr)														
		1330207	7439965	7439976	7440020	7440382	7440393	7440417	7440439	7440473	7440484	7440508	7440622	7440666	7782492	7783064
		Xylenes	Manganese	Mercury	Nickel	Arsenic	Barium	Beryllium	Cadmium	Chromium	Cobalt	Copper	Vanadium	Zinc	Selenium	H2S
SCP/CPP Oil Fugitives - 2	VOL14	8.96E-04	0.00E+00	0.00E+00	0.00E+00	0.00E+00	0.00E+00	0.00E+00	0.00E+00	0.00E+00	0.00E+00	0.00E+00	0.00E+00	0.00E+00	0.00E+00	5.65E-08
SCP/CPP Oil Fugitives - 3	VOL15	8.96E-04	0.00E+00	0.00E+00	0.00E+00	0.00E+00	0.00E+00	0.00E+00	0.00E+00	0.00E+00	0.00E+00	0.00E+00	0.00E+00	0.00E+00	0.00E+00	5.65E-08
SCP/CPP Oil Fugitives - 4	VOL16	8.96E-04	0.00E+00	0.00E+00	0.00E+00	0.00E+00	0.00E+00	0.00E+00	0.00E+00	0.00E+00	0.00E+00	0.00E+00	0.00E+00	0.00E+00	0.00E+00	5.65E-08
SCP/CPP Oil Fugitives - 5	VOL17	8.96E-04	0.00E+00	0.00E+00	0.00E+00	0.00E+00	0.00E+00	0.00E+00	0.00E+00	0.00E+00	0.00E+00	0.00E+00	0.00E+00	0.00E+00	0.00E+00	5.65E-08
SCP/CPP Gas Fugitives - 1	VOL18	8.96E-04	0.00E+00	0.00E+00	0.00E+00	0.00E+00	0.00E+00	0.00E+00	0.00E+00	0.00E+00	0.00E+00	0.00E+00	0.00E+00	0.00E+00	0.00E+00	2.64E-06
SCP/CPP Gas Fugitives - 2	VOL19	8.96E-04	0.00E+00	0.00E+00	0.00E+00	0.00E+00	0.00E+00	0.00E+00	0.00E+00	0.00E+00	0.00E+00	0.00E+00	0.00E+00	0.00E+00	0.00E+00	2.64E-06
OCP-CPF Phase 1 Oil Fugitives - 2	VOL2	4.39E-04	0.00E+00	0.00E+00	0.00E+00	0.00E+00	0.00E+00	0.00E+00	0.00E+00	0.00E+00	0.00E+00	0.00E+00	0.00E+00	0.00E+00	0.00E+00	3.17E-08
SCP/CPP Gas Fugitives - 3	VOL20	8.96E-04	0.00E+00	0.00E+00	0.00E+00	0.00E+00	0.00E+00	0.00E+00	0.00E+00	0.00E+00	0.00E+00	0.00E+00	0.00E+00	0.00E+00	0.00E+00	2.64E-06
SCP/CPP Gas Fugitives - 4	VOL21	8.96E-04	0.00E+00	0.00E+00	0.00E+00	0.00E+00	0.00E+00	0.00E+00	0.00E+00	0.00E+00	0.00E+00	0.00E+00	0.00E+00	0.00E+00	0.00E+00	2.64E-06
SCP/CPP Gas Fugitives - 5	VOL22	8.96E-04	0.00E+00	0.00E+00	0.00E+00	0.00E+00	0.00E+00	0.00E+00	0.00E+00	0.00E+00	0.00E+00	0.00E+00	0.00E+00	0.00E+00	0.00E+00	2.64E-06
LOS/COS Oil Fugitives	VOL23	3.60E-03	0.00E+00	0.00E+00	0.00E+00	0.00E+00	0.00E+00	0.00E+00	0.00E+00	0.00E+00	0.00E+00	0.00E+00	0.00E+00	0.00E+00	0.00E+00	1.57E-07
LOS/COS Gas Fugitives	VOL24	3.60E-03	0.00E+00	0.00E+00	0.00E+00	0.00E+00	0.00E+00	0.00E+00	0.00E+00	0.00E+00	0.00E+00	0.00E+00	0.00E+00	0.00E+00	0.00E+00	5.93E-06
Phase 1 WCP Oil Fugitives - 1	VOL25	4.27E-04	0.00E+00	0.00E+00	0.00E+00	0.00E+00	0.00E+00	0.00E+00	0.00E+00	0.00E+00	0.00E+00	0.00E+00	0.00E+00	0.00E+00	0.00E+00	6.44E-08
Phase 1 WCP Oil Fugitives - 2	VOL26	4.27E-04	0.00E+00	0.00E+00	0.00E+00	0.00E+00	0.00E+00	0.00E+00	0.00E+00	0.00E+00	0.00E+00	0.00E+00	0.00E+00	0.00E+00	0.00E+00	6.44E-08
Phase 1 WCP Gas Fugitives - 1	VOL27	4.27E-04	0.00E+00	0.00E+00	0.00E+00	0.00E+00	0.00E+00	0.00E+00	0.00E+00	0.00E+00	0.00E+00	0.00E+00	0.00E+00	0.00E+00	0.00E+00	1.18E-06
Phase 1 WCP Gas Fugitives - 2	VOL28	4.27E-04	0.00E+00	0.00E+00	0.00E+00	0.00E+00	0.00E+00	0.00E+00	0.00E+00	0.00E+00	0.00E+00	0.00E+00	0.00E+00	0.00E+00	0.00E+00	1.18E-06
Phase 2 WCP Oil Fugitives - 1	VOL29	4.27E-04	0.00E+00	0.00E+00	0.00E+00	0.00E+00	0.00E+00	0.00E+00	0.00E+00	0.00E+00	0.00E+00	0.00E+00	0.00E+00	0.00E+00	0.00E+00	6.44E-08
OCP-CPF Phase 1 Oil Fugitives - 3	VOL3	4.39E-04	0.00E+00	0.00E+00	0.00E+00	0.00E+00	0.00E+00	0.00E+00	0.00E+00	0.00E+00	0.00E+00	0.00E+00	0.00E+00	0.00E+00	0.00E+00	3.17E-08
Phase 2 WCP Oil Fugitives - 2	VOL30	4.27E-04	0.00E+00	0.00E+00	0.00E+00	0.00E+00	0.00E+00	0.00E+00	0.00E+00	0.00E+00	0.00E+00	0.00E+00	0.00E+00	0.00E+00	0.00E+00	6.44E-08
Phase 2 WCP Gas Fugitives - 1	VOL31	4.27E-04	0.00E+00	0.00E+00	0.00E+00	0.00E+00	0.00E+00	0.00E+00	0.00E+00	0.00E+00	0.00E+00	0.00E+00	0.00E+00	0.00E+00	0.00E+00	1.18E-06
Phase 2 WCP Gas Fugitives - 2	VOL32	4.27E-04	0.00E+00	0.00E+00	0.00E+00	0.00E+00	0.00E+00	0.00E+00	0.00E+00	0.00E+00	0.00E+00	0.00E+00	0.00E+00	0.00E+00	0.00E+00	1.18E-06
LACT Oil Fugitives - 1	VOL33	3.97E-05	0.00E+00	0.00E+00	0.00E+00	0.00E+00	0.00E+00	0.00E+00	0.00E+00	0.00E+00	0.00E+00	0.00E+00	0.00E+00	0.00E+00	0.00E+00	6.35E-08
LACT Oil Fugitives - 2	VOL34	3.97E-05	0.00E+00	0.00E+00	0.00E+00	0.00E+00	0.00E+00	0.00E+00	0.00E+00	0.00E+00	0.00E+00	0.00E+00	0.00E+00	0.00E+00	0.00E+00	3.16E-08
LACT Oil Fugitives - 3	VOL35	3.97E-05	0.00E+00	0.00E+00	0.00E+00	0.00E+00	0.00E+00	0.00E+00	0.00E+00	0.00E+00	0.00E+00	0.00E+00	0.00E+00	0.00E+00	0.00E+00	9.90E-09
LACT Gas Fugitives - 1	VOL36	3.97E-05	0.00E+00	0.00E+00	0.00E+00	0.00E+00	0.00E+00	0.00E+00	0.00E+00	0.00E+00	0.00E+00	0.00E+00	0.00E+00	0.00E+00	0.00E+00	4.68E-07
LACT Gas Fugitives - 2	VOL37	3.97E-05	0.00E+00	0.00E+00	0.00E+00	0.00E+00	0.00E+00	0.00E+00	0.00E+00	0.00E+00	0.00E+00	0.00E+00	0.00E+00	0.00E+00	0.00E+00	2.34E-07
LACT Gas Fugitives - 3	VOL38	3.97E-05	0.00E+00	0.00E+00	0.00E+00	0.00E+00	0.00E+00	0.00E+00	0.00E+00	0.00E+00	0.00E+00	0.00E+00	0.00E+00	0.00E+00	0.00E+00	0.00E+00
Sulfurox Gas Fugitives - 1	VOL39	7.66E-05	0.00E+00	0.00E+00	0.00E+00	0.00E+00	0.00E+00	0.00E+00	0.00E+00	0.00E+00	0.00E+00	0.00E+00	0.00E+00	0.00E+00	0.00E+00	1.90E-03
OCP-CPF Phase 1 Gas Fugitives - 1	VOL4	4.39E-04	0.00E+00	0.00E+00	0.00E+00	0.00E+00	0.00E+00	0.00E+00	0.00E+00	0.00E+00	0.00E+00	0.00E+00	0.00E+00	0.00E+00	0.00E+00	1.63E-06
Sulfurox Gas Fugitives - 2	VOL40	7.66E-05	0.00E+00	0.00E+00	0.00E+00	0.00E+00	0.00E+00	0.00E+00	0.00E+00	0.00E+00	0.00E+00	0.00E+00	0.00E+00	0.00E+00	0.00E+00	1.90E-03
Sulfurox Gas Fugitives - 3	VOL41	7.66E-05	0.00E+00	0.00E+00	0.00E+00	0.00E+00	0.00E+00	0.00E+00	0.00E+00	0.00E+00	0.00E+00	0.00E+00	0.00E+00	0.00E+00	0.00E+00	1.90E-03
Sulfurox GasFugitives - 4	VOL42	7.66E-05	0.00E+00	0.00E+00	0.00E+00	0.00E+00	0.00E+00	0.00E+00	0.00E+00	0.00E+00	0.00E+00	0.00E+00	0.00E+00	0.00E+00	0.00E+00	1.90E-03
Sulfurox Gas Fugitives - 5	VOL43	7.66E-05	0.00E+00	0.00E+00	0.00E+00	0.00E+00	0.00E+00	0.00E+00	0.00E+00	0.00E+00	0.00E+00	0.00E+00	0.00E+00	0.00E+00	0.00E+00	1.90E-03
Sulfurox Gas Fugitives - 6	VOL44	7.66E-05	0.00E+00	0.00E+00	0.00E+00	0.00E+00	0.00E+00	0.00E+00	0.00E+00	0.00E+00	0.00E+00	0.00E+00	0.00E+00	0.00E+00	0.00E+00	1.90E-03
Sulfurox Gas Fugitives - 7	VOL45	7.66E-05	0.00E+00	0.00E+00	0.00E+00	0.00E+00	0.00E+00	0.00E+00	0.00E+00	0.00E+00	0.00E+00	0.00E+00	0.00E+00	0.00E+00	0.00E+00	1.90E-03
Sulfurox Gas Fugitives - 8	VOL46	7.66E-05	0.00E+00	0.00E+00	0.00E+00	0.00E+00	0.00E+00	0.00E+00	0.00E+00	0.00E+00	0.00E+00	0.00E+00	0.00E+00	0.00E+00	0.00E+00	1.90E-03
PGTP All Fugitives V-5880 P-5890 P59	VOL47	2.23E-05	0.00E+00	0.00E+00	0.00E+00	0.00E+00	0.00E+00	0.00E+00	0.00E+00	0.00E+00	0.00E+00	0.00E+00	0.00E+00	0.00E+00	0.00E+00	8.77E-07
PGTP and GS Fugitives FF-5030 FF-50	VOL48	4.38E-04	0.00E+00	0.00E+00	0.00E+00	0.00E+00	0.00E+00	0.00E+00	0.00E+00	0.00E+00	0.00E+00	0.00E+00	0.00E+00	0.00E+00	0.00E+00	1.67E-02
PGTP Fugitives P-5980 P-5990 V-5970	VOL49	3.57E-04	0.00E+00	0.00E+00	0.00E+00	0.00E+00	0.00E+00	0.00E+00	0.00E+00	0.00E+00	0.00E+00	0.00E+00	0.00E+00	0.00E+00	0.00E+00	4.01E-03
OCP-CPF Phase 1 Gas Fugitives - 2	VOL5	4.39E-04	0.00E+00	0.00E+00	0.00E+00	0.00E+00	0.00E+00	0.00E+00	0.00E+00	0.00E+00	0.00E+00	0.00E+00	0.00E+00	0.00E+00	0.00E+00	1.63E-06
PGTP Fugitives V-5670 V-5660	VOL50	3.57E-04	0.00E+00	0.00E+00	0.00E+00	0.00E+00	0.00E+00	0.00E+00	0.00E+00	0.00E+00	0.00E+00	0.00E+00	0.00E+00	0.00E+00	0.00E+00	7.17E-03
PGSG Fugitives SG-6030 V-6050	VOL51	2.23E-05	0.00E+00	0.00E+00	0.00E+00	0.00E+00	0.00E+00	0.00E+00	0.00E+00	0.00E+00	0.00E+00	0.00E+00	0.00E+00	0.00E+00	0.00E+00	1.43E-06
OCP-GS FF-1510 FF-1520 HX-1080 HX	VOL52	1.03E-03	0.00E+00	0.00E+00	0.00E+00	0.00E+00	0.00E+00	0.00E+00	0.00E+00	0.00E+00	0.00E+00	0.00E+00	0.00E+00	0.00E+00	0.00E+00	8.13E-06
Loading Rack 1	VOL53	0.00E+00	0.00E+00	0.00E+00	0.00E+00	0.00E+00	0.00E+00	0.00E+00	0.00E+00	0.00E+00	0.00E+00	0.00E+00	0.00E+00	0.00E+00	0.00E+00	1.20E-05
Loading Rack 2	VOL54	0.00E+00	0.00E+00	0.00E+00	0.00E+00	0.00E+00	0.00E+00	0.00E+00	0.00E+00	0.00E+00	0.00E+00	0.00E+00	0.00E+00	0.00E+00	0.00E+00	1.20E-05
Flare Gas Fugitives F5910	VOL55	2.23E-05	0.00E+00	0.00E+00	0.00E+00	0.00E+00	0.00E+00	0.00E+00	0.00E+00	0.00E+00	0.00E+00	0.00E+00	0.00E+00	0.00E+00	0.00E+00	2.34E-07
Well Fugitives	VOL56	0.00E+00	0.00E+00	0.00E+00	0.00E+00	0.00E+00	0.00E+00	0.00E+00	0.00E+00	0.00E+00	0.00E+00	0.00E+00	0.00E+00	0.00E+00	0.00E+00	1.18E-04
Well Fugitives	VOL57	0.00E+00	0.00E+00	0.00E+00	0.00E+00	0.00E+00	0.00E+00	0.00E+00	0.00E+00	0.00E+00	0.00E+00	0.00E+00	0.00E+00	0.00E+00	0.00E+00	1.18E-04
Well Fugitives	VOL58	0.00E+00	0.00E+00	0.00E+00	0.00E+00	0.00E+00	0.00E+00	0.00E+00	0.00E+00	0.00E+00	0.00E+00	0.00E+00	0.00E+00	0.00E+00	0.00E+00	1.18E-04
Well Fugitives	VOL59	0.00E+00	0.00E+00	0.00E+00	0.00E+00	0.00E+00	0.00E+00	0.00E+00	0.00E+00	0.00E+00	0.00E+00	0.00E+00	0.00E+00	0.00E+00	0.00E+00	1.18E-04
OCP-CPF Phase 1 Gas Fugitives - 3	VOL6	4.39E-04	0.00E+00	0.00E+00	0.00E+00	0.00E+00	0.00E+00	0.00E+00	0.00E+00	0.00E+00	0.00E+00	0.00E+00	0.00E+00	0.00E+00	0.00E+00	1.63E-06
Well Fugitives	VOL60	0.00E+00	0.00E+00	0.00E+00	0.00E+00	0.00E+00	0.00E+00	0.00E+00	0.00E+00	0.00E+00	0.00E+00	0.00E+00	0.00E+00	0.00E+00	0.00E+00	1.18E-04
Well Fugitives	VOL61	0.00E+00	0.00E+00	0.00E+00	0.00E+00	0.00E+00	0.00E+00	0.00E+00	0.00E+00	0.00E+00	0.00E+00	0.00E+00	0.00E+00	0.00E+00	0.00E+00	1.18E-04
Well Fugitives	VOL62	0.00E+00	0.00E+00	0.00E+00	0.00E+00	0.00E+00	0.00E+00	0.00E+00	0.00E+00	0.00E+00	0.00E+00	0.00E+00	0.00E+00	0.00E+00	0.00E+00	1.18E-04
Well Fugitives	VOL63	0.00E+00	0.00E+00	0.00E+00	0.00E+00	0.00E+00	0.00E+00	0.00E+00	0.00E+00	0.00E+00	0.00E+00	0.00E+00	0.00E+00	0.00E+00	0.00E+00	1.18E-04
Well Fugitives	VOL64	0.00E+00	0.00E+00	0.00E+00	0.00E+00	0.00E+00	0.00E+00	0.00E+00	0.00E+00	0.00E+00	0.00E+00	0.00E+00	0.00E+00	0.00E+00	0.00E+00	1.18E-04
Well Fugitives	VOL65	0.00E+00	0.00E+00	0.00E+00	0.00E+00	0.00E+00	0.00E+00	0.00E+00	0.00E+00	0.00E+00	0.00E+00	0.00E+00	0.00E+00	0.00E+00	0.00E+00	1.18E-04
Well Fugitives	VOL66	0.00E+00	0.00E+00	0.00E+00	0.00E+00	0.00E+00	0.00E+00	0.00E+00	0.00E+00	0.00E+00	0.00E+00	0.00E+00	0.00E+00	0.00E+00	0.00E+00	1.18E-04
Well Fugitives	VOL67	0.00E+00	0.00E+00	0.00E+00	0.00E+00	0.00E+00	0.00E+00	0.00E+00	0.00E+00	0.00E+00	0.00E+00	0.00E+00	0.00E+00	0.00E+00	0.00E+00	1.18E-04
Well Fugitives	VOL68	0.00E+00	0.00E+00	0.00E+00	0.00E+00	0.00E+00	0.00E+00	0.00E+00	0.00E+00	0.00E+00	0.00E+00	0.00E+00	0.00E+00	0.00E+00	0.00E+00	1.18E-04
Well Fugitives	VOL69	0.00E+00	0.00E+00	0.00E+00	0.00E+00	0.00E+00	0.00E+00	0.00E+00	0.00E+00	0.00E+00	0.00E+00	0.00E+00	0.00E+00	0.00E+00	0.00E+00	1.18E-04
OCP-CPF Phase 2 Oil Fugitives - 1	VOL7	4.39E-04	0.00E+00	0.00E+00	0.00E+00	0.00E+00	0.00E+00	0.00E+00	0.00E+00	0.00E+00	0.00E+00	0.00E+00	0.00E+00	0.00E+00	0.00E+00	2.74E-08
Well Fugitives	VOL70	0.00E+00	0.00E+00	0.00E+00	0.00E+00	0.00E+00	0.00E+00	0.00E+00	0.00E+00	0.00E+00	0.00E+00	0.00E+00	0.00E+00	0.00E+00	0.00E+00	1.18E-04

TABLE C-1: HRA Emission Sources Max Hour Emisisons

Source	AERMOD Source Designation	CAS Number, Pollutant Abbreviation and Emisisons (lbs/hr)														
		1330207 Xylenes	7439965 Manganese	7439976 Mercury	7440020 Nickel	7440382 Arsenic	7440393 Barium	7440417 Beryllium	7440439 Cadmium	7440473 Chromium	7440484 Cobalt	7440508 Copper	7440622 Vanadium	7440666 Zinc	7782492 Selenium	7783064 H2S
Well Fugitives	VOL71	0.00E+00	0.00E+00	0.00E+00	0.00E+00	0.00E+00	0.00E+00	0.00E+00	0.00E+00	0.00E+00	0.00E+00	0.00E+00	0.00E+00	0.00E+00	0.00E+00	1.18E-04
Well Fugitives	VOL72	0.00E+00	0.00E+00	0.00E+00	0.00E+00	0.00E+00	0.00E+00	0.00E+00	0.00E+00	0.00E+00	0.00E+00	0.00E+00	0.00E+00	0.00E+00	0.00E+00	1.18E-04
Well Fugitives	VOL73	0.00E+00	0.00E+00	0.00E+00	0.00E+00	0.00E+00	0.00E+00	0.00E+00	0.00E+00	0.00E+00	0.00E+00	0.00E+00	0.00E+00	0.00E+00	0.00E+00	1.18E-04
Well Fugitives	VOL74	0.00E+00	0.00E+00	0.00E+00	0.00E+00	0.00E+00	0.00E+00	0.00E+00	0.00E+00	0.00E+00	0.00E+00	0.00E+00	0.00E+00	0.00E+00	0.00E+00	1.18E-04
Well Fugitives	VOL75	0.00E+00	0.00E+00	0.00E+00	0.00E+00	0.00E+00	0.00E+00	0.00E+00	0.00E+00	0.00E+00	0.00E+00	0.00E+00	0.00E+00	0.00E+00	0.00E+00	1.18E-04
Well Fugitives	VOL76	0.00E+00	0.00E+00	0.00E+00	0.00E+00	0.00E+00	0.00E+00	0.00E+00	0.00E+00	0.00E+00	0.00E+00	0.00E+00	0.00E+00	0.00E+00	0.00E+00	1.18E-04
Well Fugitives	VOL77	0.00E+00	0.00E+00	0.00E+00	0.00E+00	0.00E+00	0.00E+00	0.00E+00	0.00E+00	0.00E+00	0.00E+00	0.00E+00	0.00E+00	0.00E+00	0.00E+00	1.18E-04
Well Fugitives	VOL78	0.00E+00	0.00E+00	0.00E+00	0.00E+00	0.00E+00	0.00E+00	0.00E+00	0.00E+00	0.00E+00	0.00E+00	0.00E+00	0.00E+00	0.00E+00	0.00E+00	1.18E-04
Well Fugitives	VOL79	0.00E+00	0.00E+00	0.00E+00	0.00E+00	0.00E+00	0.00E+00	0.00E+00	0.00E+00	0.00E+00	0.00E+00	0.00E+00	0.00E+00	0.00E+00	0.00E+00	1.18E-04
OCP-CPF Phase 2 Oil Fugitives - 2	VOL8	4.39E-04	0.00E+00	0.00E+00	0.00E+00	0.00E+00	0.00E+00	0.00E+00	0.00E+00	0.00E+00	0.00E+00	0.00E+00	0.00E+00	0.00E+00	0.00E+00	2.74E-08
Well Fugitives	VOL80	0.00E+00	0.00E+00	0.00E+00	0.00E+00	0.00E+00	0.00E+00	0.00E+00	0.00E+00	0.00E+00	0.00E+00	0.00E+00	0.00E+00	0.00E+00	0.00E+00	1.18E-04
Well Fugitives	VOL81	0.00E+00	0.00E+00	0.00E+00	0.00E+00	0.00E+00	0.00E+00	0.00E+00	0.00E+00	0.00E+00	0.00E+00	0.00E+00	0.00E+00	0.00E+00	0.00E+00	1.18E-04
Well Fugitives	VOL82	0.00E+00	0.00E+00	0.00E+00	0.00E+00	0.00E+00	0.00E+00	0.00E+00	0.00E+00	0.00E+00	0.00E+00	0.00E+00	0.00E+00	0.00E+00	0.00E+00	1.18E-04
Well Fugitives	VOL83	0.00E+00	0.00E+00	0.00E+00	0.00E+00	0.00E+00	0.00E+00	0.00E+00	0.00E+00	0.00E+00	0.00E+00	0.00E+00	0.00E+00	0.00E+00	0.00E+00	1.18E-04
Well Fugitives	VOL84	0.00E+00	0.00E+00	0.00E+00	0.00E+00	0.00E+00	0.00E+00	0.00E+00	0.00E+00	0.00E+00	0.00E+00	0.00E+00	0.00E+00	0.00E+00	0.00E+00	1.18E-04
Well Fugitives	VOL85	0.00E+00	0.00E+00	0.00E+00	0.00E+00	0.00E+00	0.00E+00	0.00E+00	0.00E+00	0.00E+00	0.00E+00	0.00E+00	0.00E+00	0.00E+00	0.00E+00	1.18E-04
Well Fugitives	VOL86	0.00E+00	0.00E+00	0.00E+00	0.00E+00	0.00E+00	0.00E+00	0.00E+00	0.00E+00	0.00E+00	0.00E+00	0.00E+00	0.00E+00	0.00E+00	0.00E+00	1.18E-04
Well Fugitives	VOL87	0.00E+00	0.00E+00	0.00E+00	0.00E+00	0.00E+00	0.00E+00	0.00E+00	0.00E+00	0.00E+00	0.00E+00	0.00E+00	0.00E+00	0.00E+00	0.00E+00	1.18E-04
Well Fugitives	VOL88	0.00E+00	0.00E+00	0.00E+00	0.00E+00	0.00E+00	0.00E+00	0.00E+00	0.00E+00	0.00E+00	0.00E+00	0.00E+00	0.00E+00	0.00E+00	0.00E+00	1.18E-04
Well Fugitives	VOL89	0.00E+00	0.00E+00	0.00E+00	0.00E+00	0.00E+00	0.00E+00	0.00E+00	0.00E+00	0.00E+00	0.00E+00	0.00E+00	0.00E+00	0.00E+00	0.00E+00	1.18E-04
OCP-CPF Phase 2 Oil Fugitives - 3	VOL9	4.39E-04	0.00E+00	0.00E+00	0.00E+00	0.00E+00	0.00E+00	0.00E+00	0.00E+00	0.00E+00	0.00E+00	0.00E+00	0.00E+00	0.00E+00	0.00E+00	2.74E-08
Well Fugitives	VOL90	0.00E+00	0.00E+00	0.00E+00	0.00E+00	0.00E+00	0.00E+00	0.00E+00	0.00E+00	0.00E+00	0.00E+00	0.00E+00	0.00E+00	0.00E+00	0.00E+00	1.18E-04
Well Fugitives	VOL91	0.00E+00	0.00E+00	0.00E+00	0.00E+00	0.00E+00	0.00E+00	0.00E+00	0.00E+00	0.00E+00	0.00E+00	0.00E+00	0.00E+00	0.00E+00	0.00E+00	1.18E-04
Well Fugitives	VOL92	0.00E+00	0.00E+00	0.00E+00	0.00E+00	0.00E+00	0.00E+00	0.00E+00	0.00E+00	0.00E+00	0.00E+00	0.00E+00	0.00E+00	0.00E+00	0.00E+00	1.18E-04
Well Fugitives	VOL93	0.00E+00	0.00E+00	0.00E+00	0.00E+00	0.00E+00	0.00E+00	0.00E+00	0.00E+00	0.00E+00	0.00E+00	0.00E+00	0.00E+00	0.00E+00	0.00E+00	1.18E-04
Well Fugitives	VOL94	0.00E+00	0.00E+00	0.00E+00	0.00E+00	0.00E+00	0.00E+00	0.00E+00	0.00E+00	0.00E+00	0.00E+00	0.00E+00	0.00E+00	0.00E+00	0.00E+00	1.18E-04
Well Fugitives	VOL95	0.00E+00	0.00E+00	0.00E+00	0.00E+00	0.00E+00	0.00E+00	0.00E+00	0.00E+00	0.00E+00	0.00E+00	0.00E+00	0.00E+00	0.00E+00	0.00E+00	1.18E-04
Well Fugitives	VOL96	0.00E+00	0.00E+00	0.00E+00	0.00E+00	0.00E+00	0.00E+00	0.00E+00	0.00E+00	0.00E+00	0.00E+00	0.00E+00	0.00E+00	0.00E+00	0.00E+00	1.18E-04
Well Fugitives	VOL97	0.00E+00	0.00E+00	0.00E+00	0.00E+00	0.00E+00	0.00E+00	0.00E+00	0.00E+00	0.00E+00	0.00E+00	0.00E+00	0.00E+00	0.00E+00	0.00E+00	1.18E-04
Well Fugitives	VOL98	0.00E+00	0.00E+00	0.00E+00	0.00E+00	0.00E+00	0.00E+00	0.00E+00	0.00E+00	0.00E+00	0.00E+00	0.00E+00	0.00E+00	0.00E+00	0.00E+00	1.18E-04
Well Fugitives	VOL99	0.00E+00	0.00E+00	0.00E+00	0.00E+00	0.00E+00	0.00E+00	0.00E+00	0.00E+00	0.00E+00	0.00E+00	0.00E+00	0.00E+00	0.00E+00	0.00E+00	1.18E-04

TABLE C-2: HRA Emission Sources Annual Emisisons

Source	AERMOD Source Designation	CAS Number, Pollutant Abbreviation and Emisisons (lbs/yr)														
		1151 PAHs-w/o	9901 DieselExhPM	50000 Formaldehyde	56235 CCl4	67561 Methanol	67630 Isopropyl Alcoh	67663 Chloroform	71432 Benzene	75003 Ethyl Chloride	75014 Vinyl Chloride	75070 Acetaldehyde	75092 Methylene Chlor	75343 1,1-DiClEthane	79005 1,1,2TriClEthan	79345 TetraClEthane
Truck Travel	SLINE1	0.00E+00	2.85E+00	0.00E+00	0.00E+00	0.00E+00	0.00E+00	0.00E+00	0.00E+00	0.00E+00	0.00E+00	0.00E+00	0.00E+00	0.00E+00	0.00E+00	0.00E+00
10,000 Barrel 1	STCK1	0.00E+00	0.00E+00	0.00E+00	0.00E+00	0.00E+00	0.00E+00	0.00E+00	1.84E+01	0.00E+00	0.00E+00	0.00E+00	0.00E+00	0.00E+00	0.00E+00	0.00E+00
85 MMBtu SG 3	STCK10	7.09E-02	0.00E+00	8.71E+00	0.00E+00	0.00E+00	0.00E+00	0.00E+00	4.11E+00	0.00E+00	0.00E+00	2.20E+00	0.00E+00	0.00E+00	0.00E+00	0.00E+00
85 MMBtu SG 4	STCK11	7.09E-02	0.00E+00	8.71E+00	0.00E+00	0.00E+00	0.00E+00	0.00E+00	4.11E+00	0.00E+00	0.00E+00	2.20E+00	0.00E+00	0.00E+00	0.00E+00	0.00E+00
85 MMBtu SG 5	STCK12	7.09E-02	0.00E+00	8.71E+00	0.00E+00	0.00E+00	0.00E+00	0.00E+00	4.11E+00	0.00E+00	0.00E+00	2.20E+00	0.00E+00	0.00E+00	0.00E+00	0.00E+00
85 MMBtu SG 6	STCK13	7.09E-02	0.00E+00	8.71E+00	0.00E+00	0.00E+00	0.00E+00	0.00E+00	4.11E+00	0.00E+00	0.00E+00	2.20E+00	0.00E+00	0.00E+00	0.00E+00	0.00E+00
Generator	STCK14	3.31E-02	0.00E+00	6.51E+01	4.52E-02	3.08E+00	0.00E+00	3.51E-02	5.42E-01	2.30E-03	1.84E-02	1.03E+01	2.46E-02	2.91E-02	3.92E-02	4.93E-02
Emergency Flare	STCK15	9.60E-02	0.00E+00	8.02E+00	0.00E+00	0.00E+00	0.00E+00	0.00E+00	1.09E+00	0.00E+00	0.00E+00	2.95E-01	0.00E+00	0.00E+00	0.00E+00	0.00E+00
100 Barrel 1	STCK16	0.00E+00	0.00E+00	0.00E+00	0.00E+00	0.00E+00	0.00E+00	0.00E+00	1.36E-01	0.00E+00	0.00E+00	0.00E+00	0.00E+00	0.00E+00	0.00E+00	0.00E+00
100 Barrel 2	STCK17	0.00E+00	0.00E+00	0.00E+00	0.00E+00	0.00E+00	0.00E+00	0.00E+00	1.36E-01	0.00E+00	0.00E+00	0.00E+00	0.00E+00	0.00E+00	0.00E+00	0.00E+00
1,000 BBL Skim Tank 2	STCK18	0.00E+00	0.00E+00	0.00E+00	0.00E+00	0.00E+00	0.00E+00	0.00E+00	4.34E+00	0.00E+00	0.00E+00	0.00E+00	0.00E+00	0.00E+00	0.00E+00	0.00E+00
1,000 BBL Sludge Tank 2	STCK19	0.00E+00	0.00E+00	0.00E+00	0.00E+00	0.00E+00	0.00E+00	0.00E+00	1.63E+00	0.00E+00	0.00E+00	0.00E+00	0.00E+00	0.00E+00	0.00E+00	0.00E+00
10,000 Barrel 2	STCK2	0.00E+00	0.00E+00	0.00E+00	0.00E+00	0.00E+00	0.00E+00	0.00E+00	1.84E+01	0.00E+00	0.00E+00	0.00E+00	0.00E+00	0.00E+00	0.00E+00	0.00E+00
6,500 Barrel 1	STCK3	0.00E+00	0.00E+00	0.00E+00	0.00E+00	0.00E+00	0.00E+00	0.00E+00	3.53E+01	0.00E+00	0.00E+00	0.00E+00	0.00E+00	0.00E+00	0.00E+00	0.00E+00
6,500 Barrel 2	STCK4	0.00E+00	0.00E+00	0.00E+00	0.00E+00	0.00E+00	0.00E+00	0.00E+00	3.53E+01	0.00E+00	0.00E+00	0.00E+00	0.00E+00	0.00E+00	0.00E+00	0.00E+00
1,000 BBL Skim Tank 1	STCK5	0.00E+00	0.00E+00	0.00E+00	0.00E+00	0.00E+00	0.00E+00	0.00E+00	4.34E+00	0.00E+00	0.00E+00	0.00E+00	0.00E+00	0.00E+00	0.00E+00	0.00E+00
1,000 BBL Sludge Tank 1	STCK6	0.00E+00	0.00E+00	0.00E+00	0.00E+00	0.00E+00	0.00E+00	0.00E+00	1.63E+00	0.00E+00	0.00E+00	0.00E+00	0.00E+00	0.00E+00	0.00E+00	0.00E+00
62.5 MMBtu SG	STCK7	5.21E-02	0.00E+00	6.41E+00	0.00E+00	0.00E+00	0.00E+00	0.00E+00	3.02E+00	0.00E+00	0.00E+00	1.62E+00	0.00E+00	0.00E+00	0.00E+00	0.00E+00
85 MMBtu SG 1	STCK8	7.09E-02	0.00E+00	8.71E+00	0.00E+00	0.00E+00	0.00E+00	0.00E+00	4.11E+00	0.00E+00	0.00E+00	2.20E+00	0.00E+00	0.00E+00	0.00E+00	0.00E+00
85 MMBtu SG 2	STCK9	7.09E-02	0.00E+00	8.71E+00	0.00E+00	0.00E+00	0.00E+00	0.00E+00	4.11E+00	0.00E+00	0.00E+00	2.20E+00	0.00E+00	0.00E+00	0.00E+00	0.00E+00
OCP-CPF Phase 1 Oil Fugitives - 1	VOL1	0.00E+00	0.00E+00	0.00E+00	0.00E+00	2.06E+00	4.19E+00	0.00E+00	1.80E-02	0.00E+00	0.00E+00	0.00E+00	0.00E+00	0.00E+00	0.00E+00	0.00E+00
OCP-CPF Phase 2 Gas Fugitives - 1	VOL10	0.00E+00	0.00E+00	0.00E+00	0.00E+00	2.06E+00	4.19E+00	0.00E+00	5.33E-01	0.00E+00	0.00E+00	0.00E+00	0.00E+00	0.00E+00	0.00E+00	0.00E+00
Well Fugitives	VOL100	0.00E+00	0.00E+00	0.00E+00	0.00E+00	0.00E+00	0.00E+00	0.00E+00	1.33E-02	0.00E+00	0.00E+00	0.00E+00	0.00E+00	0.00E+00	0.00E+00	0.00E+00
Well Fugitives	VOL101	0.00E+00	0.00E+00	0.00E+00	0.00E+00	0.00E+00	0.00E+00	0.00E+00	1.33E-02	0.00E+00	0.00E+00	0.00E+00	0.00E+00	0.00E+00	0.00E+00	0.00E+00
Well Fugitives	VOL102	0.00E+00	0.00E+00	0.00E+00	0.00E+00	0.00E+00	0.00E+00	0.00E+00	1.33E-02	0.00E+00	0.00E+00	0.00E+00	0.00E+00	0.00E+00	0.00E+00	0.00E+00
Well Fugitives	VOL103	0.00E+00	0.00E+00	0.00E+00	0.00E+00	0.00E+00	0.00E+00	0.00E+00	1.33E-02	0.00E+00	0.00E+00	0.00E+00	0.00E+00	0.00E+00	0.00E+00	0.00E+00
Well Fugitives	VOL104	0.00E+00	0.00E+00	0.00E+00	0.00E+00	0.00E+00	0.00E+00	0.00E+00	1.33E-02	0.00E+00	0.00E+00	0.00E+00	0.00E+00	0.00E+00	0.00E+00	0.00E+00
Well Fugitives	VOL105	0.00E+00	0.00E+00	0.00E+00	0.00E+00	0.00E+00	0.00E+00	0.00E+00	1.33E-02	0.00E+00	0.00E+00	0.00E+00	0.00E+00	0.00E+00	0.00E+00	0.00E+00
Well Fugitives	VOL106	0.00E+00	0.00E+00	0.00E+00	0.00E+00	0.00E+00	0.00E+00	0.00E+00	1.33E-02	0.00E+00	0.00E+00	0.00E+00	0.00E+00	0.00E+00	0.00E+00	0.00E+00
Well Fugitives	VOL107	0.00E+00	0.00E+00	0.00E+00	0.00E+00	0.00E+00	0.00E+00	0.00E+00	1.33E-02	0.00E+00	0.00E+00	0.00E+00	0.00E+00	0.00E+00	0.00E+00	0.00E+00
Well Fugitives	VOL108	0.00E+00	0.00E+00	0.00E+00	0.00E+00	0.00E+00	0.00E+00	0.00E+00	1.33E-02	0.00E+00	0.00E+00	0.00E+00	0.00E+00	0.00E+00	0.00E+00	0.00E+00
Well Fugitives	VOL109	0.00E+00	0.00E+00	0.00E+00	0.00E+00	0.00E+00	0.00E+00	0.00E+00	1.33E-02	0.00E+00	0.00E+00	0.00E+00	0.00E+00	0.00E+00	0.00E+00	0.00E+00
OCP-CPF Phase 2 Gas Fugitives - 2	VOL11	0.00E+00	0.00E+00	0.00E+00	0.00E+00	2.06E+00	4.19E+00	0.00E+00	5.33E-01	0.00E+00	0.00E+00	0.00E+00	0.00E+00	0.00E+00	0.00E+00	0.00E+00
Well Fugitives	VOL110	0.00E+00	0.00E+00	0.00E+00	0.00E+00	0.00E+00	0.00E+00	0.00E+00	1.33E-02	0.00E+00	0.00E+00	0.00E+00	0.00E+00	0.00E+00	0.00E+00	0.00E+00
Well Fugitives	VOL111	0.00E+00	0.00E+00	0.00E+00	0.00E+00	0.00E+00	0.00E+00	0.00E+00	1.33E-02	0.00E+00	0.00E+00	0.00E+00	0.00E+00	0.00E+00	0.00E+00	0.00E+00
Well Fugitives	VOL112	0.00E+00	0.00E+00	0.00E+00	0.00E+00	0.00E+00	0.00E+00	0.00E+00	1.33E-02	0.00E+00	0.00E+00	0.00E+00	0.00E+00	0.00E+00	0.00E+00	0.00E+00
Well Fugitives	VOL113	0.00E+00	0.00E+00	0.00E+00	0.00E+00	0.00E+00	0.00E+00	0.00E+00	1.33E-02	0.00E+00	0.00E+00	0.00E+00	0.00E+00	0.00E+00	0.00E+00	0.00E+00
Well Fugitives	VOL114	0.00E+00	0.00E+00	0.00E+00	0.00E+00	0.00E+00	0.00E+00	0.00E+00	1.33E-02	0.00E+00	0.00E+00	0.00E+00	0.00E+00	0.00E+00	0.00E+00	0.00E+00
Well Fugitives	VOL115	0.00E+00	0.00E+00	0.00E+00	0.00E+00	0.00E+00	0.00E+00	0.00E+00	1.33E-02	0.00E+00	0.00E+00	0.00E+00	0.00E+00	0.00E+00	0.00E+00	0.00E+00
Well Fugitives	VOL116	0.00E+00	0.00E+00	0.00E+00	0.00E+00	0.00E+00	0.00E+00	0.00E+00	1.33E-02	0.00E+00	0.00E+00	0.00E+00	0.00E+00	0.00E+00	0.00E+00	0.00E+00
Well Fugitives	VOL117	0.00E+00	0.00E+00	0.00E+00	0.00E+00	0.00E+00	0.00E+00	0.00E+00	1.33E-02	0.00E+00	0.00E+00	0.00E+00	0.00E+00	0.00E+00	0.00E+00	0.00E+00
Well Fugitives	VOL118	0.00E+00	0.00E+00	0.00E+00	0.00E+00	0.00E+00	0.00E+00	0.00E+00	1.33E-02	0.00E+00	0.00E+00	0.00E+00	0.00E+00	0.00E+00	0.00E+00	0.00E+00
Well Fugitives	VOL119	0.00E+00	0.00E+00	0.00E+00	0.00E+00	0.00E+00	0.00E+00	0.00E+00	1.33E-02	0.00E+00	0.00E+00	0.00E+00	0.00E+00	0.00E+00	0.00E+00	0.00E+00
OCP-CPF Phase 2 Gas Fugitives - 3	VOL12	0.00E+00	0.00E+00	0.00E+00	0.00E+00	2.06E+00	4.19E+00	0.00E+00	5.33E-01	0.00E+00	0.00E+00	0.00E+00	0.00E+00	0.00E+00	0.00E+00	0.00E+00
Well Fugitives	VOL120	0.00E+00	0.00E+00	0.00E+00	0.00E+00	0.00E+00	0.00E+00	0.00E+00	1.33E-02	0.00E+00	0.00E+00	0.00E+00	0.00E+00	0.00E+00	0.00E+00	0.00E+00
Well Fugitives	VOL121	0.00E+00	0.00E+00	0.00E+00	0.00E+00	0.00E+00	0.00E+00	0.00E+00	1.33E-02	0.00E+00	0.00E+00	0.00E+00	0.00E+00	0.00E+00	0.00E+00	0.00E+00
Well Fugitives	VOL122	0.00E+00	0.00E+00	0.00E+00	0.00E+00	0.00E+00	0.00E+00	0.00E+00	1.33E-02	0.00E+00	0.00E+00	0.00E+00	0.00E+00	0.00E+00	0.00E+00	0.00E+00
Well Fugitives	VOL123	0.00E+00	0.00E+00	0.00E+00	0.00E+00	0.00E+00	0.00E+00	0.00E+00	1.33E-02	0.00E+00	0.00E+00	0.00E+00	0.00E+00	0.00E+00	0.00E+00	0.00E+00
Well Fugitives	VOL124	0.00E+00	0.00E+00	0.00E+00	0.00E+00	0.00E+00	0.00E+00	0.00E+00	1.33E-02	0.00E+00	0.00E+00	0.00E+00	0.00E+00	0.00E+00	0.00E+00	0.00E+00
Well Fugitives	VOL125	0.00E+00	0.00E+00	0.00E+00	0.00E+00	0.00E+00	0.00E+00	0.00E+00	1.33E-02	0.00E+00	0.00E+00	0.00E+00	0.00E+00	0.00E+00	0.00E+00	0.00E+00
Well Fugitives	VOL126	0.00E+00	0.00E+00	0.00E+00	0.00E+00	0.00E+00	0.00E+00	0.00E+00	1.33E-02	0.00E+00	0.00E+00	0.00E+00	0.00E+00	0.00E+00	0.00E+00	0.00E+00
Well Fugitives	VOL127	0.00E+00	0.00E+00	0.00E+00	0.00E+00	0.00E+00	0.00E+00	0.00E+00	1.33E-02	0.00E+00	0.00E+00	0.00E+00	0.00E+00	0.00E+00	0.00E+00	0.00E+00
Well Fugitives	VOL128	0.00E+00	0.00E+00	0.00E+00	0.00E+00	0.00E+00	0.00E+00	0.00E+00	1.33E-02	0.00E+00	0.00E+00	0.00E+00	0.00E+00	0.00E+00	0.00E+00	0.00E+00
Well Fugitives	VOL129	0.00E+00	0.00E+00	0.00E+00	0.00E+00	0.00E+00	0.00E+00	0.00E+00	1.33E-02	0.00E+00	0.00E+00	0.00E+00	0.00E+00	0.00E+00	0.00E+00	0.00E+00
SCP/CPP Oil Fugitives - 1	VOL13	0.00E+00	0.00E+00	0.00E+00	0.00E+00	4.21E+00	8.54E+00	0.00E+00	3.22E-02	0.00E+00	0.00E+00	0.00E+00	0.00E+00	0.00E+00	0.00E+00	0.00E+00
Well Fugitives	VOL130	0.00E+00	0.00E+00	0.00E+00	0.00E+00	0.00E+00	0.00E+00	0.00E+00	1.33E-02	0.00E+00	0.00E+00	0.00E+00	0.00E+00	0.00E+00	0.00E+00	0.00E+00
Well Fugitives	VOL131	0.00E+00	0.00E+00	0.00E+00	0.00E+00	0.00E+00	0.00E+00	0.00E+00	1.33E-02	0.00E+00	0.00E+00	0.00E+00	0.00E+00	0.00E+00	0.00E+00	0.00E+00
Well Fugitives	VOL132	0.00E+00	0.00E+00	0.00E+00	0.00E+00	0.00E+00	0.00E+00	0.00E+00	1.33E-02	0.00E+00	0.00E+00	0.00E+00	0.00E+00	0.00E+00	0.00E+00	0.00E+00
Well Fugitives	VOL133	0.00E+00	0.00E+00	0.00E+00	0.00E+00	0.00E+00	0.00E+00	0.00E+00	1.33E-02	0.00E+00	0.00E+00	0.00E+00	0.00E+00	0.00E+00	0.00E+00	0.00E+00
Brine Tanks Solvent Use Toxics	VOL134	0.00E+00	0.00E+00	0.00E+00	0.00E+00	0.00E+00	0.00E+00	0.00E+00	0.00E+00	0.00E+00	0.00E+00	0.00E+00	0.00E+00	0.00E+00	0.00E+00	0.00E+00
WSP Solvent Use Toxics	VOL135	0.00E+00	0.00E+00	0.00E+00	0.00E+00	4.91E+00	9.97E+00	0.00E+00	0.00E+00	0.00E+00	0.00E+00	0.00E+00	0.00E+00	0.00E+00	0.00E+00	0.00E+00
WSP Solvent Use Toxics	VOL136	0.00E+00	0.00E+00	0.00E+00	0.00E+00	4.91E+00	9.97E+00	0.00E+00	0.00E+00	0.00E+00	0.00E+00	0.00E+00	0.00E+00	0.00E+00	0.00E+00	0.00E+00
WSP Solvent Use Toxics	VOL137	0.00E+00	0.00E+00	0.00E+00	0.00E+00	4.91E+00	9.97E+00	0.00E+00	0.00E+00	0.00E+00	0.00E+00	0.00E+00	0.00E+00	0.00E+00	0.00E+00	0.00E+00
WSP Solvent Use Toxics	VOL138	0.00E+00	0.00E+00	0.00E+00	0.00E+00	4.91E+00	9.97E+00	0.00E+00	0.00E+00	0.00E+00	0.00E+00	0.00E+00	0.00E+00	0.00E+00	0.00E+00	0.00E+00

TABLE C-2: HRA Emission Sources Annual Emisisons

Source	AERMOD Source Designation	CAS Number, Pollutant Abbreviation and Emisisons (lbs/yr)														
		1151 PAHs-w/o	9901 DieselExhPM	50000 Formaldehyde	56235 CCl4	67561 Methanol	67630 Isopropyl Alcoh	67663 Chloroform	71432 Benzene	75003 Ethyl Chloride	75014 Vinyl Chloride	75070 Acetaldehyde	75092 Methylene Chlor	75343 1,1-DiClEthane	79005 1,1,2TriClEthan	79345 TetraClEthane
WSP Solvent Use Toxics	VOL139	0.00E+00	0.00E+00	0.00E+00	0.00E+00	4.91E+00	9.97E+00	0.00E+00	0.00E+00	0.00E+00	0.00E+00	0.00E+00	0.00E+00	0.00E+00	0.00E+00	0.00E+00
SCP/CPP Oil Fugitives - 2	VOL14	0.00E+00	0.00E+00	0.00E+00	0.00E+00	4.21E+00	8.54E+00	0.00E+00	3.22E-02	0.00E+00	0.00E+00	0.00E+00	0.00E+00	0.00E+00	0.00E+00	0.00E+00
SCP/CPP Oil Fugitives - 3	VOL15	0.00E+00	0.00E+00	0.00E+00	0.00E+00	4.21E+00	8.54E+00	0.00E+00	3.22E-02	0.00E+00	0.00E+00	0.00E+00	0.00E+00	0.00E+00	0.00E+00	0.00E+00
SCP/CPP Oil Fugitives - 4	VOL16	0.00E+00	0.00E+00	0.00E+00	0.00E+00	4.21E+00	8.54E+00	0.00E+00	3.22E-02	0.00E+00	0.00E+00	0.00E+00	0.00E+00	0.00E+00	0.00E+00	0.00E+00
SCP/CPP Oil Fugitives - 5	VOL17	0.00E+00	0.00E+00	0.00E+00	0.00E+00	4.21E+00	8.54E+00	0.00E+00	3.22E-02	0.00E+00	0.00E+00	0.00E+00	0.00E+00	0.00E+00	0.00E+00	0.00E+00
SCP/CPP Gas Fugitives - 1	VOL18	0.00E+00	0.00E+00	0.00E+00	0.00E+00	4.21E+00	8.54E+00	0.00E+00	9.98E-01	0.00E+00	0.00E+00	0.00E+00	0.00E+00	0.00E+00	0.00E+00	0.00E+00
SCP/CPP Gas Fugitives - 2	VOL19	0.00E+00	0.00E+00	0.00E+00	0.00E+00	4.21E+00	8.54E+00	0.00E+00	9.98E-01	0.00E+00	0.00E+00	0.00E+00	0.00E+00	0.00E+00	0.00E+00	0.00E+00
OCP-CPF Phase 1 Oil Fugitives - 2	VOL2	0.00E+00	0.00E+00	0.00E+00	0.00E+00	2.06E+00	4.19E+00	0.00E+00	1.80E-02	0.00E+00	0.00E+00	0.00E+00	0.00E+00	0.00E+00	0.00E+00	0.00E+00
SCP/CPP Gas Fugitives - 3	VOL20	0.00E+00	0.00E+00	0.00E+00	0.00E+00	4.21E+00	8.54E+00	0.00E+00	9.98E-01	0.00E+00	0.00E+00	0.00E+00	0.00E+00	0.00E+00	0.00E+00	0.00E+00
SCP/CPP Gas Fugitives - 4	VOL21	0.00E+00	0.00E+00	0.00E+00	0.00E+00	4.21E+00	8.54E+00	0.00E+00	9.98E-01	0.00E+00	0.00E+00	0.00E+00	0.00E+00	0.00E+00	0.00E+00	0.00E+00
SCP/CPP Gas Fugitives - 5	VOL22	0.00E+00	0.00E+00	0.00E+00	0.00E+00	4.21E+00	8.54E+00	0.00E+00	9.98E-01	0.00E+00	0.00E+00	0.00E+00	0.00E+00	0.00E+00	0.00E+00	0.00E+00
LOS/COS Oil Fugitives	VOL23	0.00E+00	0.00E+00	0.00E+00	0.00E+00	1.69E+01	3.44E+01	0.00E+00	8.95E-02	0.00E+00	0.00E+00	0.00E+00	0.00E+00	0.00E+00	0.00E+00	0.00E+00
LOS/COS Gas Fugitives	VOL24	0.00E+00	0.00E+00	0.00E+00	0.00E+00	1.69E+01	3.44E+01	0.00E+00	2.24E+00	0.00E+00	0.00E+00	0.00E+00	0.00E+00	0.00E+00	0.00E+00	0.00E+00
Phase 1 WCP Oil Fugitives - 1	VOL25	0.00E+00	0.00E+00	0.00E+00	0.00E+00	2.01E+00	4.08E+00	0.00E+00	3.66E-02	0.00E+00	0.00E+00	0.00E+00	0.00E+00	0.00E+00	0.00E+00	0.00E+00
Phase 1 WCP Oil Fugitives - 2	VOL26	0.00E+00	0.00E+00	0.00E+00	0.00E+00	2.01E+00	4.08E+00	0.00E+00	3.66E-02	0.00E+00	0.00E+00	0.00E+00	0.00E+00	0.00E+00	0.00E+00	0.00E+00
Phase 1 WCP Gas Fugitives - 1	VOL27	0.00E+00	0.00E+00	0.00E+00	0.00E+00	2.01E+00	4.08E+00	0.00E+00	4.45E-01	0.00E+00	0.00E+00	0.00E+00	0.00E+00	0.00E+00	0.00E+00	0.00E+00
Phase 1 WCP Gas Fugitives - 2	VOL28	0.00E+00	0.00E+00	0.00E+00	0.00E+00	2.01E+00	4.08E+00	0.00E+00	4.45E-01	0.00E+00	0.00E+00	0.00E+00	0.00E+00	0.00E+00	0.00E+00	0.00E+00
Phase 2 WCP Oil Fugitives - 1	VOL29	0.00E+00	0.00E+00	0.00E+00	0.00E+00	2.01E+00	4.08E+00	0.00E+00	3.66E-02	0.00E+00	0.00E+00	0.00E+00	0.00E+00	0.00E+00	0.00E+00	0.00E+00
OCP-CPF Phase 1 Oil Fugitives - 3	VOL3	0.00E+00	0.00E+00	0.00E+00	0.00E+00	2.06E+00	4.19E+00	0.00E+00	1.80E-02	0.00E+00	0.00E+00	0.00E+00	0.00E+00	0.00E+00	0.00E+00	0.00E+00
Phase 2 WCP Oil Fugitives - 2	VOL30	0.00E+00	0.00E+00	0.00E+00	0.00E+00	2.01E+00	4.08E+00	0.00E+00	3.66E-02	0.00E+00	0.00E+00	0.00E+00	0.00E+00	0.00E+00	0.00E+00	0.00E+00
Phase 2 WCP Gas Fugitives - 1	VOL31	0.00E+00	0.00E+00	0.00E+00	0.00E+00	2.01E+00	4.08E+00	0.00E+00	4.45E-01	0.00E+00	0.00E+00	0.00E+00	0.00E+00	0.00E+00	0.00E+00	0.00E+00
Phase 2 WCP Gas Fugitives - 2	VOL32	0.00E+00	0.00E+00	0.00E+00	0.00E+00	2.01E+00	4.08E+00	0.00E+00	4.45E-01	0.00E+00	0.00E+00	0.00E+00	0.00E+00	0.00E+00	0.00E+00	0.00E+00
LACT Oil Fugitives - 1	VOL33	0.00E+00	0.00E+00	0.00E+00	0.00E+00	1.87E-01	3.79E-01	0.00E+00	3.61E-02	0.00E+00	0.00E+00	0.00E+00	0.00E+00	0.00E+00	0.00E+00	0.00E+00
LACT Oil Fugitives - 2	VOL34	0.00E+00	0.00E+00	0.00E+00	0.00E+00	1.87E-01	3.79E-01	0.00E+00	1.81E-02	0.00E+00	0.00E+00	0.00E+00	0.00E+00	0.00E+00	0.00E+00	0.00E+00
LACT Oil Fugitives - 3	VOL35	0.00E+00	0.00E+00	0.00E+00	0.00E+00	1.87E-01	3.79E-01	0.00E+00	5.68E-03	0.00E+00	0.00E+00	0.00E+00	0.00E+00	0.00E+00	0.00E+00	0.00E+00
LACT Gas Fugitives - 1	VOL36	0.00E+00	0.00E+00	0.00E+00	0.00E+00	1.87E-01	3.79E-01	0.00E+00	1.77E-01	0.00E+00	0.00E+00	0.00E+00	0.00E+00	0.00E+00	0.00E+00	0.00E+00
LACT Gas Fugitives - 2	VOL37	0.00E+00	0.00E+00	0.00E+00	0.00E+00	1.87E-01	3.79E-01	0.00E+00	8.85E-02	0.00E+00	0.00E+00	0.00E+00	0.00E+00	0.00E+00	0.00E+00	0.00E+00
LACT Gas Fugitives - 3	VOL38	0.00E+00	0.00E+00	0.00E+00	0.00E+00	1.87E-01	3.79E-01	0.00E+00	0.00E+00	0.00E+00	0.00E+00	0.00E+00	0.00E+00	0.00E+00	0.00E+00	0.00E+00
Sulfurox Gas Fugitives - 1	VOL39	0.00E+00	0.00E+00	0.00E+00	0.00E+00	3.60E-01	7.31E-01	0.00E+00	2.16E-01	0.00E+00	0.00E+00	0.00E+00	0.00E+00	0.00E+00	0.00E+00	0.00E+00
OCP-CPF Phase 1 Gas Fugitives - 1	VOL4	0.00E+00	0.00E+00	0.00E+00	0.00E+00	2.06E+00	4.19E+00	0.00E+00	6.14E-01	0.00E+00	0.00E+00	0.00E+00	0.00E+00	0.00E+00	0.00E+00	0.00E+00
Sulfurox Gas Fugitives - 2	VOL40	0.00E+00	0.00E+00	0.00E+00	0.00E+00	3.60E-01	7.31E-01	0.00E+00	2.16E-01	0.00E+00	0.00E+00	0.00E+00	0.00E+00	0.00E+00	0.00E+00	0.00E+00
Sulfurox Gas Fugitives - 3	VOL41	0.00E+00	0.00E+00	0.00E+00	0.00E+00	3.60E-01	7.31E-01	0.00E+00	2.16E-01	0.00E+00	0.00E+00	0.00E+00	0.00E+00	0.00E+00	0.00E+00	0.00E+00
Sulfurox GasFugitives - 4	VOL42	0.00E+00	0.00E+00	0.00E+00	0.00E+00	3.60E-01	7.31E-01	0.00E+00	2.16E-01	0.00E+00	0.00E+00	0.00E+00	0.00E+00	0.00E+00	0.00E+00	0.00E+00
Sulfurox Gas Fugitives - 5	VOL43	0.00E+00	0.00E+00	0.00E+00	0.00E+00	3.60E-01	7.31E-01	0.00E+00	2.16E-01	0.00E+00	0.00E+00	0.00E+00	0.00E+00	0.00E+00	0.00E+00	0.00E+00
Sulfurox Gas Fugitives - 6	VOL44	0.00E+00	0.00E+00	0.00E+00	0.00E+00	3.60E-01	7.31E-01	0.00E+00	2.16E-01	0.00E+00	0.00E+00	0.00E+00	0.00E+00	0.00E+00	0.00E+00	0.00E+00
Sulfurox Gas Fugitives - 7	VOL45	0.00E+00	0.00E+00	0.00E+00	0.00E+00	3.60E-01	7.31E-01	0.00E+00	2.16E-01	0.00E+00	0.00E+00	0.00E+00	0.00E+00	0.00E+00	0.00E+00	0.00E+00
Sulfurox Gas Fugitives - 8	VOL46	0.00E+00	0.00E+00	0.00E+00	0.00E+00	3.60E-01	7.31E-01	0.00E+00	2.16E-01	0.00E+00	0.00E+00	0.00E+00	0.00E+00	0.00E+00	0.00E+00	0.00E+00
PGTP All Fugitives V-5880 P-5890 P5	VOL47	0.00E+00	0.00E+00	0.00E+00	0.00E+00	1.05E-01	2.13E-01	0.00E+00	3.32E-01	0.00E+00	0.00E+00	0.00E+00	0.00E+00	0.00E+00	0.00E+00	0.00E+00
PGTP and GS Fugitives FF-5030 FF-5	VOL48	0.00E+00	0.00E+00	0.00E+00	0.00E+00	2.06E+00	4.17E+00	0.00E+00	1.89E+00	0.00E+00	0.00E+00	0.00E+00	0.00E+00	0.00E+00	0.00E+00	0.00E+00
PGTP Fugitives P-5980 P-5990 V-597	VOL49	0.00E+00	0.00E+00	0.00E+00	0.00E+00	1.68E+00	3.41E+00	0.00E+00	7.87E-01	0.00E+00	0.00E+00	0.00E+00	0.00E+00	0.00E+00	0.00E+00	0.00E+00
OCP-CPF Phase 1 Gas Fugitives - 2	VOL5	0.00E+00	0.00E+00	0.00E+00	0.00E+00	2.06E+00	4.19E+00	0.00E+00	6.14E-01	0.00E+00	0.00E+00	0.00E+00	0.00E+00	0.00E+00	0.00E+00	0.00E+00
PGTP Fugitives V-5670 V-5660	VOL50	0.00E+00	0.00E+00	0.00E+00	0.00E+00	1.68E+00	3.41E+00	0.00E+00	8.14E-01	0.00E+00	0.00E+00	0.00E+00	0.00E+00	0.00E+00	0.00E+00	0.00E+00
PGSG Fugitives SG-6030 V-6050	VOL51	0.00E+00	0.00E+00	0.00E+00	0.00E+00	1.05E-01	2.13E-01	0.00E+00	5.43E-01	0.00E+00	0.00E+00	0.00E+00	0.00E+00	0.00E+00	0.00E+00	0.00E+00
OCP-GS FF-1510 FF-1520 HX-1080 H	VOL52	0.00E+00	0.00E+00	0.00E+00	0.00E+00	4.85E+00	9.86E+00	0.00E+00	3.08E+00	0.00E+00	0.00E+00	0.00E+00	0.00E+00	0.00E+00	0.00E+00	0.00E+00
Loading Rack 1	VOL53	0.00E+00	0.00E+00	0.00E+00	0.00E+00	0.00E+00	0.00E+00	0.00E+00	5.91E+01	0.00E+00	0.00E+00	0.00E+00	0.00E+00	0.00E+00	0.00E+00	0.00E+00
Loading Rack 2	VOL54	0.00E+00	0.00E+00	0.00E+00	0.00E+00	0.00E+00	0.00E+00	0.00E+00	5.91E+01	0.00E+00	0.00E+00	0.00E+00	0.00E+00	0.00E+00	0.00E+00	0.00E+00
Flare Gas Fugitives F5910	VOL55	0.00E+00	0.00E+00	0.00E+00	0.00E+00	1.05E-01	2.13E-01	0.00E+00	8.85E-02	0.00E+00	0.00E+00	0.00E+00	0.00E+00	0.00E+00	0.00E+00	0.00E+00
Well Fugitives	VOL56	0.00E+00	0.00E+00	0.00E+00	0.00E+00	0.00E+00	0.00E+00	0.00E+00	1.33E-02	0.00E+00	0.00E+00	0.00E+00	0.00E+00	0.00E+00	0.00E+00	0.00E+00
Well Fugitives	VOL57	0.00E+00	0.00E+00	0.00E+00	0.00E+00	0.00E+00	0.00E+00	0.00E+00	1.33E-02	0.00E+00	0.00E+00	0.00E+00	0.00E+00	0.00E+00	0.00E+00	0.00E+00
Well Fugitives	VOL58	0.00E+00	0.00E+00	0.00E+00	0.00E+00	0.00E+00	0.00E+00	0.00E+00	1.33E-02	0.00E+00	0.00E+00	0.00E+00	0.00E+00	0.00E+00	0.00E+00	0.00E+00
Well Fugitives	VOL59	0.00E+00	0.00E+00	0.00E+00	0.00E+00	0.00E+00	0.00E+00	0.00E+00	1.33E-02	0.00E+00	0.00E+00	0.00E+00	0.00E+00	0.00E+00	0.00E+00	0.00E+00
OCP-CPF Phase 1 Gas Fugitives - 3	VOL6	0.00E+00	0.00E+00	0.00E+00	0.00E+00	2.06E+00	4.19E+00	0.00E+00	6.14E-01	0.00E+00	0.00E+00	0.00E+00	0.00E+00	0.00E+00	0.00E+00	0.00E+00
Well Fugitives	VOL60	0.00E+00	0.00E+00	0.00E+00	0.00E+00	0.00E+00	0.00E+00	0.00E+00	1.33E-02	0.00E+00	0.00E+00	0.00E+00	0.00E+00	0.00E+00	0.00E+00	0.00E+00
Well Fugitives	VOL61	0.00E+00	0.00E+00	0.00E+00	0.00E+00	0.00E+00	0.00E+00	0.00E+00	1.33E-02	0.00E+00	0.00E+00	0.00E+00	0.00E+00	0.00E+00	0.00E+00	0.00E+00
Well Fugitives	VOL62	0.00E+00	0.00E+00	0.00E+00	0.00E+00	0.00E+00	0.00E+00	0.00E+00	1.33E-02	0.00E+00	0.00E+00	0.00E+00	0.00E+00	0.00E+00	0.00E+00	0.00E+00
Well Fugitives	VOL63	0.00E+00	0.00E+00	0.00E+00	0.00E+00	0.00E+00	0.00E+00	0.00E+00	1.33E-02	0.00E+00	0.00E+00	0.00E+00	0.00E+00	0.00E+00	0.00E+00	0.00E+00
Well Fugitives	VOL64	0.00E+00	0.00E+00	0.00E+00	0.00E+00	0.00E+00	0.00E+00	0.00E+00	1.33E-02	0.00E+00	0.00E+00	0.00E+00	0.00E+00	0.00E+00	0.00E+00	0.00E+00
Well Fugitives	VOL65	0.00E+00	0.00E+00	0.00E+00	0.00E+00	0.00E+00	0.00E+00	0.00E+00	1.33E-02	0.00E+00	0.00E+00	0.00E+00	0.00E+00	0.00E+00	0.00E+00	0.00E+00
Well Fugitives	VOL66	0.00E+00	0.00E+00	0.00E+00	0.00E+00	0.00E+00	0.00E+00	0.00E+00	1.33E-02	0.00E+00	0.00E+00	0.00E+00	0.00E+00	0.00E+00	0.00E+00	0.00E+00
Well Fugitives	VOL67	0.00E+00	0.00E+00	0.00E+00	0.00E+00	0.00E+00	0.00E+00	0.00E+00	1.33E-02	0.00E+00	0.00E+00	0.00E+00	0.00E+00	0.00E+00	0.00E+00	0.00E+00
Well Fugitives	VOL68	0.00E+00	0.00E+00	0.00E+00	0.00E+00	0.00E+00	0.00E+00	0.00E+00	1.33E-02	0.00E+00	0.00E+00	0.00E+00	0.00E+00	0.00E+00	0.00E+00	0.00E+00
Well Fugitives	VOL69	0.00E+00	0.00E+00	0.00E+00	0.00E+00	0.00E+00	0.00E+00	0.00E+00	1.33E-02	0.00E+00	0.00E+00	0.00E+00	0.00E+00	0.00E+00	0.00E+00	0.00E+00
OCP-CPF Phase 2 Oil Fugitives - 1	VOL7	0.00E+00	0.00E+00	0.00E+00	0.00E+00	2.06E+00	4.19E+00	0.00E+00	1.56E-02	0.00E+00	0.00E+00	0.00E+00	0.00E+00	0.00E+00	0.00E+00	0.00E+00

TABLE C-2: HRA Emission Sources Annual Emisisons

Source	AERMOD Source Designation	CAS Number, Pollutant Abbreviation and Emisisons (lbs/yr)														
		1151 PAHs-w/o	9901 DieselExhPM	50000 Formaldehyde	56235 CCl4	67561 Methanol	67630 Isopropyl Alcoh	67663 Chloroform	71432 Benzene	75003 Ethyl Chloride	75014 Vinyl Chloride	75070 Acetaldehyde	75092 Methylene Chlor	75343 1,1-DiClEthane	79005 1,1,2TriClEthan	79345 TetraClEthane
Well Fugitives	VOL70	0.00E+00	0.00E+00	0.00E+00	0.00E+00	0.00E+00	0.00E+00	0.00E+00	1.33E-02	0.00E+00	0.00E+00	0.00E+00	0.00E+00	0.00E+00	0.00E+00	0.00E+00
Well Fugitives	VOL71	0.00E+00	0.00E+00	0.00E+00	0.00E+00	0.00E+00	0.00E+00	0.00E+00	1.33E-02	0.00E+00	0.00E+00	0.00E+00	0.00E+00	0.00E+00	0.00E+00	0.00E+00
Well Fugitives	VOL72	0.00E+00	0.00E+00	0.00E+00	0.00E+00	0.00E+00	0.00E+00	0.00E+00	1.33E-02	0.00E+00	0.00E+00	0.00E+00	0.00E+00	0.00E+00	0.00E+00	0.00E+00
Well Fugitives	VOL73	0.00E+00	0.00E+00	0.00E+00	0.00E+00	0.00E+00	0.00E+00	0.00E+00	1.33E-02	0.00E+00	0.00E+00	0.00E+00	0.00E+00	0.00E+00	0.00E+00	0.00E+00
Well Fugitives	VOL74	0.00E+00	0.00E+00	0.00E+00	0.00E+00	0.00E+00	0.00E+00	0.00E+00	1.33E-02	0.00E+00	0.00E+00	0.00E+00	0.00E+00	0.00E+00	0.00E+00	0.00E+00
Well Fugitives	VOL75	0.00E+00	0.00E+00	0.00E+00	0.00E+00	0.00E+00	0.00E+00	0.00E+00	1.33E-02	0.00E+00	0.00E+00	0.00E+00	0.00E+00	0.00E+00	0.00E+00	0.00E+00
Well Fugitives	VOL76	0.00E+00	0.00E+00	0.00E+00	0.00E+00	0.00E+00	0.00E+00	0.00E+00	1.33E-02	0.00E+00	0.00E+00	0.00E+00	0.00E+00	0.00E+00	0.00E+00	0.00E+00
Well Fugitives	VOL77	0.00E+00	0.00E+00	0.00E+00	0.00E+00	0.00E+00	0.00E+00	0.00E+00	1.33E-02	0.00E+00	0.00E+00	0.00E+00	0.00E+00	0.00E+00	0.00E+00	0.00E+00
Well Fugitives	VOL78	0.00E+00	0.00E+00	0.00E+00	0.00E+00	0.00E+00	0.00E+00	0.00E+00	1.33E-02	0.00E+00	0.00E+00	0.00E+00	0.00E+00	0.00E+00	0.00E+00	0.00E+00
Well Fugitives	VOL79	0.00E+00	0.00E+00	0.00E+00	0.00E+00	0.00E+00	0.00E+00	0.00E+00	1.33E-02	0.00E+00	0.00E+00	0.00E+00	0.00E+00	0.00E+00	0.00E+00	0.00E+00
OCP-CPF Phase 2 Oil Fugitives - 2	VOL8	0.00E+00	0.00E+00	0.00E+00	0.00E+00	2.06E+00	4.19E+00	0.00E+00	1.56E-02	0.00E+00	0.00E+00	0.00E+00	0.00E+00	0.00E+00	0.00E+00	0.00E+00
Well Fugitives	VOL80	0.00E+00	0.00E+00	0.00E+00	0.00E+00	0.00E+00	0.00E+00	0.00E+00	1.33E-02	0.00E+00	0.00E+00	0.00E+00	0.00E+00	0.00E+00	0.00E+00	0.00E+00
Well Fugitives	VOL81	0.00E+00	0.00E+00	0.00E+00	0.00E+00	0.00E+00	0.00E+00	0.00E+00	1.33E-02	0.00E+00	0.00E+00	0.00E+00	0.00E+00	0.00E+00	0.00E+00	0.00E+00
Well Fugitives	VOL82	0.00E+00	0.00E+00	0.00E+00	0.00E+00	0.00E+00	0.00E+00	0.00E+00	1.33E-02	0.00E+00	0.00E+00	0.00E+00	0.00E+00	0.00E+00	0.00E+00	0.00E+00
Well Fugitives	VOL83	0.00E+00	0.00E+00	0.00E+00	0.00E+00	0.00E+00	0.00E+00	0.00E+00	1.33E-02	0.00E+00	0.00E+00	0.00E+00	0.00E+00	0.00E+00	0.00E+00	0.00E+00
Well Fugitives	VOL84	0.00E+00	0.00E+00	0.00E+00	0.00E+00	0.00E+00	0.00E+00	0.00E+00	1.33E-02	0.00E+00	0.00E+00	0.00E+00	0.00E+00	0.00E+00	0.00E+00	0.00E+00
Well Fugitives	VOL85	0.00E+00	0.00E+00	0.00E+00	0.00E+00	0.00E+00	0.00E+00	0.00E+00	1.33E-02	0.00E+00	0.00E+00	0.00E+00	0.00E+00	0.00E+00	0.00E+00	0.00E+00
Well Fugitives	VOL86	0.00E+00	0.00E+00	0.00E+00	0.00E+00	0.00E+00	0.00E+00	0.00E+00	1.33E-02	0.00E+00	0.00E+00	0.00E+00	0.00E+00	0.00E+00	0.00E+00	0.00E+00
Well Fugitives	VOL87	0.00E+00	0.00E+00	0.00E+00	0.00E+00	0.00E+00	0.00E+00	0.00E+00	1.33E-02	0.00E+00	0.00E+00	0.00E+00	0.00E+00	0.00E+00	0.00E+00	0.00E+00
Well Fugitives	VOL88	0.00E+00	0.00E+00	0.00E+00	0.00E+00	0.00E+00	0.00E+00	0.00E+00	1.33E-02	0.00E+00	0.00E+00	0.00E+00	0.00E+00	0.00E+00	0.00E+00	0.00E+00
Well Fugitives	VOL89	0.00E+00	0.00E+00	0.00E+00	0.00E+00	0.00E+00	0.00E+00	0.00E+00	1.33E-02	0.00E+00	0.00E+00	0.00E+00	0.00E+00	0.00E+00	0.00E+00	0.00E+00
OCP-CPF Phase 2 Oil Fugitives - 3	VOL9	0.00E+00	0.00E+00	0.00E+00	0.00E+00	2.06E+00	4.19E+00	0.00E+00	1.56E-02	0.00E+00	0.00E+00	0.00E+00	0.00E+00	0.00E+00	0.00E+00	0.00E+00
Well Fugitives	VOL90	0.00E+00	0.00E+00	0.00E+00	0.00E+00	0.00E+00	0.00E+00	0.00E+00	1.33E-02	0.00E+00	0.00E+00	0.00E+00	0.00E+00	0.00E+00	0.00E+00	0.00E+00
Well Fugitives	VOL91	0.00E+00	0.00E+00	0.00E+00	0.00E+00	0.00E+00	0.00E+00	0.00E+00	1.33E-02	0.00E+00	0.00E+00	0.00E+00	0.00E+00	0.00E+00	0.00E+00	0.00E+00
Well Fugitives	VOL92	0.00E+00	0.00E+00	0.00E+00	0.00E+00	0.00E+00	0.00E+00	0.00E+00	1.33E-02	0.00E+00	0.00E+00	0.00E+00	0.00E+00	0.00E+00	0.00E+00	0.00E+00
Well Fugitives	VOL93	0.00E+00	0.00E+00	0.00E+00	0.00E+00	0.00E+00	0.00E+00	0.00E+00	1.33E-02	0.00E+00	0.00E+00	0.00E+00	0.00E+00	0.00E+00	0.00E+00	0.00E+00
Well Fugitives	VOL94	0.00E+00	0.00E+00	0.00E+00	0.00E+00	0.00E+00	0.00E+00	0.00E+00	1.33E-02	0.00E+00	0.00E+00	0.00E+00	0.00E+00	0.00E+00	0.00E+00	0.00E+00
Well Fugitives	VOL95	0.00E+00	0.00E+00	0.00E+00	0.00E+00	0.00E+00	0.00E+00	0.00E+00	1.33E-02	0.00E+00	0.00E+00	0.00E+00	0.00E+00	0.00E+00	0.00E+00	0.00E+00
Well Fugitives	VOL96	0.00E+00	0.00E+00	0.00E+00	0.00E+00	0.00E+00	0.00E+00	0.00E+00	1.33E-02	0.00E+00	0.00E+00	0.00E+00	0.00E+00	0.00E+00	0.00E+00	0.00E+00
Well Fugitives	VOL97	0.00E+00	0.00E+00	0.00E+00	0.00E+00	0.00E+00	0.00E+00	0.00E+00	1.33E-02	0.00E+00	0.00E+00	0.00E+00	0.00E+00	0.00E+00	0.00E+00	0.00E+00
Well Fugitives	VOL98	0.00E+00	0.00E+00	0.00E+00	0.00E+00	0.00E+00	0.00E+00	0.00E+00	1.33E-02	0.00E+00	0.00E+00	0.00E+00	0.00E+00	0.00E+00	0.00E+00	0.00E+00
Well Fugitives	VOL99	0.00E+00	0.00E+00	0.00E+00	0.00E+00	0.00E+00	0.00E+00	0.00E+00	1.33E-02	0.00E+00	0.00E+00	0.00E+00	0.00E+00	0.00E+00	0.00E+00	0.00E+00

TABLE C-2: HRA Emission Sources Annual Emisisons

Source	AERMOD Source Designation	CAS Number, Pollutant Abbreviation and Emisisons (lbs/yr)														
		91203 Naphthalene	100414 Ethyl Benzene	100425 Styrene	106898 ichlorohydr	106934 EDB	106990 1,3-Butadiene	107028 Acrolein	107982 PGME	108883 Toluene	108907 Chlorobenzr	108952 Phenol	110543 Hexane	115071 Propylene	205992 b]fluoranth	218019 Chrysene
Truck Travel	SLINE1	0.00E+00	0.00E+00	0.00E+00	0.00E+00	0.00E+00	0.00E+00	0.00E+00	0.00E+00	0.00E+00	0.00E+00	0.00E+00	0.00E+00	0.00E+00	0.00E+00	0.00E+00
10,000 Barrel 1	STCK1	0.00E+00	0.00E+00	0.00E+00	0.00E+00	0.00E+00	0.00E+00	0.00E+00	0.00E+00	1.08E+01	0.00E+00	0.00E+00	7.53E+01	0.00E+00	0.00E+00	0.00E+00
85 MMBtu SG 3	STCK10	2.13E-01	4.89E+00	0.00E+00	0.00E+00	0.00E+00	0.00E+00	1.91E+00	0.00E+00	1.88E+01	0.00E+00	0.00E+00	3.26E+00	3.76E+02	0.00E+00	0.00E+00
85 MMBtu SG 4	STCK11	2.13E-01	4.89E+00	0.00E+00	0.00E+00	0.00E+00	0.00E+00	1.91E+00	0.00E+00	1.88E+01	0.00E+00	0.00E+00	3.26E+00	3.76E+02	0.00E+00	0.00E+00
85 MMBtu SG 5	STCK12	2.13E-01	4.89E+00	0.00E+00	0.00E+00	0.00E+00	0.00E+00	1.91E+00	0.00E+00	1.88E+01	0.00E+00	0.00E+00	3.26E+00	3.76E+02	0.00E+00	0.00E+00
85 MMBtu SG 6	STCK13	2.13E-01	4.89E+00	0.00E+00	0.00E+00	0.00E+00	0.00E+00	1.91E+00	0.00E+00	1.88E+01	0.00E+00	0.00E+00	3.26E+00	3.76E+02	0.00E+00	0.00E+00
Generator	STCK14	9.17E-02	4.89E-02	2.91E-02	0.00E+00	5.46E-02	3.29E-01	6.33E+00	0.00E+00	5.03E-01	3.75E-02	2.96E-02	1.37E+00	0.00E+00	2.05E-04	8.54E-04
Emergency Flare	STCK15	7.54E-02	9.90E+00	0.00E+00	0.00E+00	0.00E+00	0.00E+00	6.86E-02	0.00E+00	3.98E-01	0.00E+00	0.00E+00	1.99E-01	1.67E+01	0.00E+00	0.00E+00
100 Barrel 1	STCK16	0.00E+00	0.00E+00	0.00E+00	0.00E+00	0.00E+00	0.00E+00	0.00E+00	0.00E+00	7.91E-02	0.00E+00	0.00E+00	5.54E-01	0.00E+00	0.00E+00	0.00E+00
100 Barrel 2	STCK17	0.00E+00	0.00E+00	0.00E+00	0.00E+00	0.00E+00	0.00E+00	0.00E+00	0.00E+00	7.91E-02	0.00E+00	0.00E+00	5.54E-01	0.00E+00	0.00E+00	0.00E+00
1,000 BBL Skim Tank 2	STCK18	0.00E+00	0.00E+00	0.00E+00	0.00E+00	0.00E+00	0.00E+00	0.00E+00	0.00E+00	2.53E+00	0.00E+00	0.00E+00	1.77E+01	0.00E+00	0.00E+00	0.00E+00
1,000 BBL Sludge Tank 2	STCK19	0.00E+00	0.00E+00	0.00E+00	0.00E+00	0.00E+00	0.00E+00	0.00E+00	0.00E+00	9.49E-01	0.00E+00	0.00E+00	6.64E+00	0.00E+00	0.00E+00	0.00E+00
10,000 Barrel 2	STCK2	0.00E+00	0.00E+00	0.00E+00	0.00E+00	0.00E+00	0.00E+00	0.00E+00	0.00E+00	1.08E+01	0.00E+00	0.00E+00	7.53E+01	0.00E+00	0.00E+00	0.00E+00
6,500 Barrel 1	STCK3	0.00E+00	0.00E+00	0.00E+00	0.00E+00	0.00E+00	0.00E+00	0.00E+00	0.00E+00	2.06E+01	0.00E+00	0.00E+00	1.44E+02	0.00E+00	0.00E+00	0.00E+00
6,500 Barrel 2	STCK4	0.00E+00	0.00E+00	0.00E+00	0.00E+00	0.00E+00	0.00E+00	0.00E+00	0.00E+00	2.06E+01	0.00E+00	0.00E+00	1.44E+02	0.00E+00	0.00E+00	0.00E+00
1,000 BBL Skim Tank 1	STCK5	0.00E+00	0.00E+00	0.00E+00	0.00E+00	0.00E+00	0.00E+00	0.00E+00	0.00E+00	2.53E+00	0.00E+00	0.00E+00	1.77E+01	0.00E+00	0.00E+00	0.00E+00
1,000 BBL Sludge Tank 1	STCK6	0.00E+00	0.00E+00	0.00E+00	0.00E+00	0.00E+00	0.00E+00	0.00E+00	0.00E+00	9.49E-01	0.00E+00	0.00E+00	6.64E+00	0.00E+00	0.00E+00	0.00E+00
62.5 MMBtu SG	STCK7	1.57E-01	3.60E+00	0.00E+00	0.00E+00	0.00E+00	0.00E+00	1.41E+00	0.00E+00	1.38E+01	0.00E+00	0.00E+00	2.40E+00	2.76E+02	0.00E+00	0.00E+00
85 MMBtu SG 1	STCK8	2.13E-01	4.89E+00	0.00E+00	0.00E+00	0.00E+00	0.00E+00	1.91E+00	0.00E+00	1.88E+01	0.00E+00	0.00E+00	3.26E+00	3.76E+02	0.00E+00	0.00E+00
85 MMBtu SG 2	STCK9	2.13E-01	4.89E+00	0.00E+00	0.00E+00	0.00E+00	0.00E+00	1.91E+00	0.00E+00	1.88E+01	0.00E+00	0.00E+00	3.26E+00	3.76E+02	0.00E+00	0.00E+00
OCP-CPF Phase 1 Oil Fugitives - 1	VOL1	0.00E+00	9.90E-01	0.00E+00	1.23E-01	0.00E+00	0.00E+00	0.00E+00	5.84E-02	0.00E+00	0.00E+00	0.00E+00	1.78E+00	0.00E+00	0.00E+00	0.00E+00
OCP-CPF Phase 2 Gas Fugitives - 1	VOL10	0.00E+00	9.90E-01	0.00E+00	1.23E-01	0.00E+00	0.00E+00	0.00E+00	5.85E-02	0.00E+00	0.00E+00	0.00E+00	2.77E+01	0.00E+00	0.00E+00	0.00E+00
Well Fugitives	VOL100	0.00E+00	0.00E+00	0.00E+00	0.00E+00	0.00E+00	0.00E+00	0.00E+00	0.00E+00	0.00E+00	0.00E+00	0.00E+00	1.32E+00	0.00E+00	0.00E+00	0.00E+00
Well Fugitives	VOL101	0.00E+00	0.00E+00	0.00E+00	0.00E+00	0.00E+00	0.00E+00	0.00E+00	0.00E+00	0.00E+00	0.00E+00	0.00E+00	1.32E+00	0.00E+00	0.00E+00	0.00E+00
Well Fugitives	VOL102	0.00E+00	0.00E+00	0.00E+00	0.00E+00	0.00E+00	0.00E+00	0.00E+00	0.00E+00	0.00E+00	0.00E+00	0.00E+00	1.32E+00	0.00E+00	0.00E+00	0.00E+00
Well Fugitives	VOL103	0.00E+00	0.00E+00	0.00E+00	0.00E+00	0.00E+00	0.00E+00	0.00E+00	0.00E+00	0.00E+00	0.00E+00	0.00E+00	1.32E+00	0.00E+00	0.00E+00	0.00E+00
Well Fugitives	VOL104	0.00E+00	0.00E+00	0.00E+00	0.00E+00	0.00E+00	0.00E+00	0.00E+00	0.00E+00	0.00E+00	0.00E+00	0.00E+00	1.32E+00	0.00E+00	0.00E+00	0.00E+00
Well Fugitives	VOL105	0.00E+00	0.00E+00	0.00E+00	0.00E+00	0.00E+00	0.00E+00	0.00E+00	0.00E+00	0.00E+00	0.00E+00	0.00E+00	1.32E+00	0.00E+00	0.00E+00	0.00E+00
Well Fugitives	VOL106	0.00E+00	0.00E+00	0.00E+00	0.00E+00	0.00E+00	0.00E+00	0.00E+00	0.00E+00	0.00E+00	0.00E+00	0.00E+00	1.32E+00	0.00E+00	0.00E+00	0.00E+00
Well Fugitives	VOL107	0.00E+00	0.00E+00	0.00E+00	0.00E+00	0.00E+00	0.00E+00	0.00E+00	0.00E+00	0.00E+00	0.00E+00	0.00E+00	1.32E+00	0.00E+00	0.00E+00	0.00E+00
Well Fugitives	VOL108	0.00E+00	0.00E+00	0.00E+00	0.00E+00	0.00E+00	0.00E+00	0.00E+00	0.00E+00	0.00E+00	0.00E+00	0.00E+00	1.32E+00	0.00E+00	0.00E+00	0.00E+00
Well Fugitives	VOL109	0.00E+00	0.00E+00	0.00E+00	0.00E+00	0.00E+00	0.00E+00	0.00E+00	0.00E+00	0.00E+00	0.00E+00	0.00E+00	1.32E+00	0.00E+00	0.00E+00	0.00E+00
OCP-CPF Phase 2 Gas Fugitives - 2	VOL11	0.00E+00	9.90E-01	0.00E+00	1.23E-01	0.00E+00	0.00E+00	0.00E+00	5.85E-02	0.00E+00	0.00E+00	0.00E+00	2.77E+01	0.00E+00	0.00E+00	0.00E+00
Well Fugitives	VOL110	0.00E+00	0.00E+00	0.00E+00	0.00E+00	0.00E+00	0.00E+00	0.00E+00	0.00E+00	0.00E+00	0.00E+00	0.00E+00	1.32E+00	0.00E+00	0.00E+00	0.00E+00
Well Fugitives	VOL111	0.00E+00	0.00E+00	0.00E+00	0.00E+00	0.00E+00	0.00E+00	0.00E+00	0.00E+00	0.00E+00	0.00E+00	0.00E+00	1.32E+00	0.00E+00	0.00E+00	0.00E+00
Well Fugitives	VOL112	0.00E+00	0.00E+00	0.00E+00	0.00E+00	0.00E+00	0.00E+00	0.00E+00	0.00E+00	0.00E+00	0.00E+00	0.00E+00	1.32E+00	0.00E+00	0.00E+00	0.00E+00
Well Fugitives	VOL113	0.00E+00	0.00E+00	0.00E+00	0.00E+00	0.00E+00	0.00E+00	0.00E+00	0.00E+00	0.00E+00	0.00E+00	0.00E+00	1.32E+00	0.00E+00	0.00E+00	0.00E+00
Well Fugitives	VOL114	0.00E+00	0.00E+00	0.00E+00	0.00E+00	0.00E+00	0.00E+00	0.00E+00	0.00E+00	0.00E+00	0.00E+00	0.00E+00	1.32E+00	0.00E+00	0.00E+00	0.00E+00
Well Fugitives	VOL115	0.00E+00	0.00E+00	0.00E+00	0.00E+00	0.00E+00	0.00E+00	0.00E+00	0.00E+00	0.00E+00	0.00E+00	0.00E+00	1.32E+00	0.00E+00	0.00E+00	0.00E+00
Well Fugitives	VOL116	0.00E+00	0.00E+00	0.00E+00	0.00E+00	0.00E+00	0.00E+00	0.00E+00	0.00E+00	0.00E+00	0.00E+00	0.00E+00	1.32E+00	0.00E+00	0.00E+00	0.00E+00
Well Fugitives	VOL117	0.00E+00	0.00E+00	0.00E+00	0.00E+00	0.00E+00	0.00E+00	0.00E+00	0.00E+00	0.00E+00	0.00E+00	0.00E+00	1.32E+00	0.00E+00	0.00E+00	0.00E+00
Well Fugitives	VOL118	0.00E+00	0.00E+00	0.00E+00	0.00E+00	0.00E+00	0.00E+00	0.00E+00	0.00E+00	0.00E+00	0.00E+00	0.00E+00	1.32E+00	0.00E+00	0.00E+00	0.00E+00
Well Fugitives	VOL119	0.00E+00	0.00E+00	0.00E+00	0.00E+00	0.00E+00	0.00E+00	0.00E+00	0.00E+00	0.00E+00	0.00E+00	0.00E+00	1.32E+00	0.00E+00	0.00E+00	0.00E+00
OCP-CPF Phase 2 Gas Fugitives - 3	VOL12	0.00E+00	9.90E-01	0.00E+00	1.23E-01	0.00E+00	0.00E+00	0.00E+00	5.85E-02	0.00E+00	0.00E+00	0.00E+00	2.77E+01	0.00E+00	0.00E+00	0.00E+00
Well Fugitives	VOL120	0.00E+00	0.00E+00	0.00E+00	0.00E+00	0.00E+00	0.00E+00	0.00E+00	0.00E+00	0.00E+00	0.00E+00	0.00E+00	1.32E+00	0.00E+00	0.00E+00	0.00E+00
Well Fugitives	VOL121	0.00E+00	0.00E+00	0.00E+00	0.00E+00	0.00E+00	0.00E+00	0.00E+00	0.00E+00	0.00E+00	0.00E+00	0.00E+00	1.32E+00	0.00E+00	0.00E+00	0.00E+00
Well Fugitives	VOL122	0.00E+00	0.00E+00	0.00E+00	0.00E+00	0.00E+00	0.00E+00	0.00E+00	0.00E+00	0.00E+00	0.00E+00	0.00E+00	1.32E+00	0.00E+00	0.00E+00	0.00E+00
Well Fugitives	VOL123	0.00E+00	0.00E+00	0.00E+00	0.00E+00	0.00E+00	0.00E+00	0.00E+00	0.00E+00	0.00E+00	0.00E+00	0.00E+00	1.32E+00	0.00E+00	0.00E+00	0.00E+00
Well Fugitives	VOL124	0.00E+00	0.00E+00	0.00E+00	0.00E+00	0.00E+00	0.00E+00	0.00E+00	0.00E+00	0.00E+00	0.00E+00	0.00E+00	1.32E+00	0.00E+00	0.00E+00	0.00E+00
Well Fugitives	VOL125	0.00E+00	0.00E+00	0.00E+00	0.00E+00	0.00E+00	0.00E+00	0.00E+00	0.00E+00	0.00E+00	0.00E+00	0.00E+00	1.32E+00	0.00E+00	0.00E+00	0.00E+00
Well Fugitives	VOL126	0.00E+00	0.00E+00	0.00E+00	0.00E+00	0.00E+00	0.00E+00	0.00E+00	0.00E+00	0.00E+00	0.00E+00	0.00E+00	1.32E+00	0.00E+00	0.00E+00	0.00E+00
Well Fugitives	VOL127	0.00E+00	0.00E+00	0.00E+00	0.00E+00	0.00E+00	0.00E+00	0.00E+00	0.00E+00	0.00E+00	0.00E+00	0.00E+00	1.32E+00	0.00E+00	0.00E+00	0.00E+00
Well Fugitives	VOL128	0.00E+00	0.00E+00	0.00E+00	0.00E+00	0.00E+00	0.00E+00	0.00E+00	0.00E+00	0.00E+00	0.00E+00	0.00E+00	1.32E+00	0.00E+00	0.00E+00	0.00E+00
Well Fugitives	VOL129	0.00E+00	0.00E+00	0.00E+00	0.00E+00	0.00E+00	0.00E+00	0.00E+00	0.00E+00	0.00E+00	0.00E+00	0.00E+00	1.32E+00	0.00E+00	0.00E+00	0.00E+00
SCP/CPP Oil Fugitives - 1	VOL13	0.00E+00	2.02E+00	0.00E+00	2.51E-01	0.00E+00	0.00E+00	0.00E+00	1.19E-01	0.00E+00	0.00E+00	0.00E+00	3.19E+00	0.00E+00	0.00E+00	0.00E+00
Well Fugitives	VOL130	0.00E+00	0.00E+00	0.00E+00	0.00E+00	0.00E+00	0.00E+00	0.00E+00	0.00E+00	0.00E+00	0.00E+00	0.00E+00	1.32E+00	0.00E+00	0.00E+00	0.00E+00
Well Fugitives	VOL131	0.00E+00	0.00E+00	0.00E+00	0.00E+00	0.00E+00	0.00E+00	0.00E+00	0.00E+00	0.00E+00	0.00E+00	0.00E+00	1.32E+00	0.00E+00	0.00E+00	0.00E+00
Well Fugitives	VOL132	0.00E+00	0.00E+00	0.00E+00	0.00E+00	0.00E+00	0.00E+00	0.00E+00	0.00E+00	0.00E+00	0.00E+00	0.00E+00	1.32E+00	0.00E+00	0.00E+00	0.00E+00
Well Fugitives	VOL133	0.00E+00	0.00E+00	0.00E+00	0.00E+00	0.00E+00	0.00E+00	0.00E+00	0.00E+00	0.00E+00	0.00E+00	0.00E+00	1.32E+00	0.00E+00	0.00E+00	0.00E+00
Brine Tanks Solvent Use Toxics	VOL134	0.00E+00	0.00E+00	0.00E+00	1.15E+02	0.00E+00	0.00E+00	0.00E+00	0.00E+00	0.00E+00	0.00E+00	0.00E+00	0.00E+00	0.00E+00	0.00E+00	0.00E+00
WSP Solvent Use Toxics	VOL135	0.00E+00	2.36E+00	0.00E+00	2.93E-01	0.00E+00	0.00E+00	0.00E+00	1.39E-01	0.00E+00	0.00E+00	0.00E+00	0.00E+00	0.00E+00	0.00E+00	0.00E+00
WSP Solvent Use Toxics	VOL136	0.00E+00	2.36E+00	0.00E+00	2.93E-01	0.00E+00	0.00E+00	0.00E+00	1.39E-01	0.00E+00	0.00E+00	0.00E+00	0.00E+00	0.00E+00	0.00E+00	0.00E+00
WSP Solvent Use Toxics	VOL137	0.00E+00	2.36E+00	0.00E+00	2.93E-01	0.00E+00	0.00E+00	0.00E+00	1.39E-01	0.00E+00	0.00E+00	0.00E+00	0.00E+00	0.00E+00	0.00E+00	0.00E+00
WSP Solvent Use Toxics	VOL138	0.00E+00	2.36E+00	0.00E+00	2.93E-01	0.00E+00	0.00E+00	0.00E+00	1.39E-01	0.00E+00	0.00E+00	0.00E+00	0.00E+00	0.00E+00	0.00E+00	0.00E+00

TABLE C-2: HRA Emission Sources Annual Emisisons

Source	AERMOD Source Designation	CAS Number, Pollutant Abbreviation and Emisisons (lbs/yr)														
		91203 Naphthalene	100414 Ethyl Benzene	100425 Styrene	106898 ichlorohydr	106934 EDB	106990 1,3-Butadiene	107028 Acrolein	107982 PGME	108883 Toluene	108907 Chlorobenzr	108952 Phenol	110543 Hexane	115071 Propylene	205992 b]fluoranth	218019 Chrysene
WSP Solvent Use Toxics	VOL139	0.00E+00	2.36E+00	0.00E+00	2.93E-01	0.00E+00	0.00E+00	0.00E+00	1.39E-01	0.00E+00	0.00E+00	0.00E+00	0.00E+00	0.00E+00	0.00E+00	0.00E+00
SCP/CPP Oil Fugitives - 2	VOL14	0.00E+00	2.02E+00	0.00E+00	2.51E-01	0.00E+00	0.00E+00	0.00E+00	1.19E-01	0.00E+00	0.00E+00	0.00E+00	3.19E+00	0.00E+00	0.00E+00	0.00E+00
SCP/CPP Oil Fugitives - 3	VOL15	0.00E+00	2.02E+00	0.00E+00	2.51E-01	0.00E+00	0.00E+00	0.00E+00	1.19E-01	0.00E+00	0.00E+00	0.00E+00	3.19E+00	0.00E+00	0.00E+00	0.00E+00
SCP/CPP Oil Fugitives - 4	VOL16	0.00E+00	2.02E+00	0.00E+00	2.51E-01	0.00E+00	0.00E+00	0.00E+00	1.19E-01	0.00E+00	0.00E+00	0.00E+00	3.19E+00	0.00E+00	0.00E+00	0.00E+00
SCP/CPP Oil Fugitives - 5	VOL17	0.00E+00	2.02E+00	0.00E+00	2.51E-01	0.00E+00	0.00E+00	0.00E+00	1.19E-01	0.00E+00	0.00E+00	0.00E+00	3.19E+00	0.00E+00	0.00E+00	0.00E+00
SCP/CPP Gas Fugitives - 1	VOL18	0.00E+00	2.02E+00	0.00E+00	2.51E-01	0.00E+00	0.00E+00	0.00E+00	1.19E-01	0.00E+00	0.00E+00	0.00E+00	5.19E+01	0.00E+00	0.00E+00	0.00E+00
SCP/CPP Gas Fugitives - 2	VOL19	0.00E+00	2.02E+00	0.00E+00	2.51E-01	0.00E+00	0.00E+00	0.00E+00	1.19E-01	0.00E+00	0.00E+00	0.00E+00	5.19E+01	0.00E+00	0.00E+00	0.00E+00
OCP-CPF Phase 1 Oil Fugitives - 2	VOL2	0.00E+00	9.90E-01	0.00E+00	1.23E-01	0.00E+00	0.00E+00	0.00E+00	5.84E-02	0.00E+00	0.00E+00	0.00E+00	1.78E+00	0.00E+00	0.00E+00	0.00E+00
SCP/CPP Gas Fugitives - 3	VOL20	0.00E+00	2.02E+00	0.00E+00	2.51E-01	0.00E+00	0.00E+00	0.00E+00	1.19E-01	0.00E+00	0.00E+00	0.00E+00	5.19E+01	0.00E+00	0.00E+00	0.00E+00
SCP/CPP Gas Fugitives - 4	VOL21	0.00E+00	2.02E+00	0.00E+00	2.51E-01	0.00E+00	0.00E+00	0.00E+00	1.19E-01	0.00E+00	0.00E+00	0.00E+00	5.19E+01	0.00E+00	0.00E+00	0.00E+00
SCP/CPP Gas Fugitives - 5	VOL22	0.00E+00	2.02E+00	0.00E+00	2.51E-01	0.00E+00	0.00E+00	0.00E+00	1.19E-01	0.00E+00	0.00E+00	0.00E+00	5.19E+01	0.00E+00	0.00E+00	0.00E+00
LOS/COS Oil Fugitives	VOL23	0.00E+00	8.12E+00	0.00E+00	1.01E+00	0.00E+00	0.00E+00	0.00E+00	4.80E-01	0.00E+00	0.00E+00	0.00E+00	8.86E+00	0.00E+00	0.00E+00	0.00E+00
LOS/COS Gas Fugitives	VOL24	0.00E+00	8.12E+00	0.00E+00	1.01E+00	0.00E+00	0.00E+00	0.00E+00	4.80E-01	0.00E+00	0.00E+00	0.00E+00	1.17E+02	0.00E+00	0.00E+00	0.00E+00
Phase 1 WCP Oil Fugitives - 1	VOL25	0.00E+00	9.64E-01	0.00E+00	1.20E-01	0.00E+00	0.00E+00	0.00E+00	5.69E-02	0.00E+00	0.00E+00	0.00E+00	3.62E+00	0.00E+00	0.00E+00	0.00E+00
Phase 1 WCP Oil Fugitives - 2	VOL26	0.00E+00	9.64E-01	0.00E+00	1.20E-01	0.00E+00	0.00E+00	0.00E+00	5.69E-02	0.00E+00	0.00E+00	0.00E+00	3.62E+00	0.00E+00	0.00E+00	0.00E+00
Phase 1 WCP Gas Fugitives - 1	VOL27	0.00E+00	9.64E-01	0.00E+00	1.20E-01	0.00E+00	0.00E+00	0.00E+00	5.69E-02	0.00E+00	0.00E+00	0.00E+00	2.31E+01	0.00E+00	0.00E+00	0.00E+00
Phase 1 WCP Gas Fugitives - 2	VOL28	0.00E+00	9.64E-01	0.00E+00	1.20E-01	0.00E+00	0.00E+00	0.00E+00	5.69E-02	0.00E+00	0.00E+00	0.00E+00	2.31E+01	0.00E+00	0.00E+00	0.00E+00
Phase 2 WCP Oil Fugitives - 1	VOL29	0.00E+00	9.64E-01	0.00E+00	1.20E-01	0.00E+00	0.00E+00	0.00E+00	5.69E-02	0.00E+00	0.00E+00	0.00E+00	3.62E+00	0.00E+00	0.00E+00	0.00E+00
OCP-CPF Phase 1 Oil Fugitives - 3	VOL3	0.00E+00	9.90E-01	0.00E+00	1.23E-01	0.00E+00	0.00E+00	0.00E+00	5.84E-02	0.00E+00	0.00E+00	0.00E+00	1.78E+00	0.00E+00	0.00E+00	0.00E+00
Phase 2 WCP Oil Fugitives - 2	VOL30	0.00E+00	9.64E-01	0.00E+00	1.20E-01	0.00E+00	0.00E+00	0.00E+00	5.69E-02	0.00E+00	0.00E+00	0.00E+00	3.62E+00	0.00E+00	0.00E+00	0.00E+00
Phase 2 WCP Gas Fugitives - 1	VOL31	0.00E+00	9.64E-01	0.00E+00	1.20E-01	0.00E+00	0.00E+00	0.00E+00	5.69E-02	0.00E+00	0.00E+00	0.00E+00	2.31E+01	0.00E+00	0.00E+00	0.00E+00
Phase 2 WCP Gas Fugitives - 2	VOL32	0.00E+00	9.64E-01	0.00E+00	1.20E-01	0.00E+00	0.00E+00	0.00E+00	5.69E-02	0.00E+00	0.00E+00	0.00E+00	2.31E+01	0.00E+00	0.00E+00	0.00E+00
LACT Oil Fugitives - 1	VOL33	0.00E+00	8.96E-02	0.00E+00	1.12E-02	0.00E+00	0.00E+00	0.00E+00	5.29E-03	0.00E+00	0.00E+00	0.00E+00	3.58E+00	0.00E+00	0.00E+00	0.00E+00
LACT Oil Fugitives - 2	VOL34	0.00E+00	8.96E-02	0.00E+00	1.12E-02	0.00E+00	0.00E+00	0.00E+00	5.29E-03	0.00E+00	0.00E+00	0.00E+00	1.79E+00	0.00E+00	0.00E+00	0.00E+00
LACT Oil Fugitives - 3	VOL35	0.00E+00	8.96E-02	0.00E+00	1.12E-02	0.00E+00	0.00E+00	0.00E+00	5.29E-03	0.00E+00	0.00E+00	0.00E+00	5.62E-01	0.00E+00	0.00E+00	0.00E+00
LACT Gas Fugitives - 1	VOL36	0.00E+00	8.96E-02	0.00E+00	1.12E-02	0.00E+00	0.00E+00	0.00E+00	5.29E-03	0.00E+00	0.00E+00	0.00E+00	9.20E+00	0.00E+00	0.00E+00	0.00E+00
LACT Gas Fugitives - 2	VOL37	0.00E+00	8.96E-02	0.00E+00	1.12E-02	0.00E+00	0.00E+00	0.00E+00	5.29E-03	0.00E+00	0.00E+00	0.00E+00	4.60E+00	0.00E+00	0.00E+00	0.00E+00
LACT Gas Fugitives - 3	VOL38	0.00E+00	8.96E-02	0.00E+00	1.12E-02	0.00E+00	0.00E+00	0.00E+00	5.29E-03	0.00E+00	0.00E+00	0.00E+00	0.00E+00	0.00E+00	0.00E+00	0.00E+00
Sulfurox Gas Fugitives - 1	VOL39	0.00E+00	1.73E-01	0.00E+00	2.15E-02	0.00E+00	0.00E+00	0.00E+00	1.02E-02	0.00E+00	0.00E+00	0.00E+00	1.12E+01	0.00E+00	0.00E+00	0.00E+00
OCP-CPF Phase 1 Gas Fugitives - 1	VOL4	0.00E+00	9.90E-01	0.00E+00	1.23E-01	0.00E+00	0.00E+00	0.00E+00	5.84E-02	0.00E+00	0.00E+00	0.00E+00	3.19E+01	0.00E+00	0.00E+00	0.00E+00
Sulfurox Gas Fugitives - 2	VOL40	0.00E+00	1.73E-01	0.00E+00	2.15E-02	0.00E+00	0.00E+00	0.00E+00	1.02E-02	0.00E+00	0.00E+00	0.00E+00	1.12E+01	0.00E+00	0.00E+00	0.00E+00
Sulfurox Gas Fugitives - 3	VOL41	0.00E+00	1.73E-01	0.00E+00	2.15E-02	0.00E+00	0.00E+00	0.00E+00	1.02E-02	0.00E+00	0.00E+00	0.00E+00	1.12E+01	0.00E+00	0.00E+00	0.00E+00
Sulfurox GasFugitives - 4	VOL42	0.00E+00	1.73E-01	0.00E+00	2.15E-02	0.00E+00	0.00E+00	0.00E+00	1.02E-02	0.00E+00	0.00E+00	0.00E+00	1.12E+01	0.00E+00	0.00E+00	0.00E+00
Sulfurox Gas Fugitives - 5	VOL43	0.00E+00	1.73E-01	0.00E+00	2.15E-02	0.00E+00	0.00E+00	0.00E+00	1.02E-02	0.00E+00	0.00E+00	0.00E+00	1.12E+01	0.00E+00	0.00E+00	0.00E+00
Sulfurox Gas Fugitives - 6	VOL44	0.00E+00	1.73E-01	0.00E+00	2.15E-02	0.00E+00	0.00E+00	0.00E+00	1.02E-02	0.00E+00	0.00E+00	0.00E+00	1.12E+01	0.00E+00	0.00E+00	0.00E+00
Sulfurox Gas Fugitives - 7	VOL45	0.00E+00	1.73E-01	0.00E+00	2.15E-02	0.00E+00	0.00E+00	0.00E+00	1.02E-02	0.00E+00	0.00E+00	0.00E+00	1.12E+01	0.00E+00	0.00E+00	0.00E+00
Sulfurox Gas Fugitives - 8	VOL46	0.00E+00	1.73E-01	0.00E+00	2.15E-02	0.00E+00	0.00E+00	0.00E+00	1.02E-02	0.00E+00	0.00E+00	0.00E+00	1.12E+01	0.00E+00	0.00E+00	0.00E+00
PGTP All Fugitives V-5880 P-5890 P59	VOL47	0.00E+00	5.04E-02	0.00E+00	6.27E-03	0.00E+00	0.00E+00	0.00E+00	2.97E-03	0.00E+00	0.00E+00	0.00E+00	1.75E+01	0.00E+00	0.00E+00	0.00E+00
PGTP and GS Fugitives FF-5030 FF-50	VOL48	0.00E+00	9.87E-01	0.00E+00	1.23E-01	0.00E+00	0.00E+00	0.00E+00	5.83E-02	0.00E+00	0.00E+00	0.00E+00	9.92E+01	0.00E+00	0.00E+00	0.00E+00
PGTP Fugitives P-5980 P-5990 V-5970	VOL49	0.00E+00	8.06E-01	0.00E+00	1.00E-01	0.00E+00	0.00E+00	0.00E+00	4.76E-02	0.00E+00	0.00E+00	0.00E+00	4.11E+01	0.00E+00	0.00E+00	0.00E+00
OCP-CPF Phase 1 Gas Fugitives - 2	VOL5	0.00E+00	9.90E-01	0.00E+00	1.23E-01	0.00E+00	0.00E+00	0.00E+00	5.84E-02	0.00E+00	0.00E+00	0.00E+00	3.19E+01	0.00E+00	0.00E+00	0.00E+00
PGTP Fugitives V-5670 V-5660	VOL50	0.00E+00	8.06E-01	0.00E+00	1.00E-01	0.00E+00	0.00E+00	0.00E+00	4.76E-02	0.00E+00	0.00E+00	0.00E+00	4.23E+01	0.00E+00	0.00E+00	0.00E+00
PGSG Fugitives SG-6030 V-6050	VOL51	0.00E+00	5.04E-02	0.00E+00	6.27E-03	0.00E+00	0.00E+00	0.00E+00	2.97E-03	0.00E+00	0.00E+00	0.00E+00	2.86E+01	0.00E+00	0.00E+00	0.00E+00
OCP-GS FF-1510 FF-1520 HX-1080 HX	VOL52	0.00E+00	2.33E+00	0.00E+00	2.90E-01	0.00E+00	0.00E+00	0.00E+00	1.38E-01	0.00E+00	0.00E+00	0.00E+00	1.62E+02	0.00E+00	0.00E+00	0.00E+00
Loading Rack 1	VOL53	0.00E+00	0.00E+00	0.00E+00	0.00E+00	0.00E+00	0.00E+00	0.00E+00	0.00E+00	3.45E+01	0.00E+00	0.00E+00	2.41E+02	0.00E+00	0.00E+00	0.00E+00
Loading Rack 2	VOL54	0.00E+00	0.00E+00	0.00E+00	0.00E+00	0.00E+00	0.00E+00	0.00E+00	0.00E+00	3.45E+01	0.00E+00	0.00E+00	2.41E+02	0.00E+00	0.00E+00	0.00E+00
Flare Gas Fugitives F5910	VOL55	0.00E+00	5.04E-02	0.00E+00	6.27E-03	0.00E+00	0.00E+00	0.00E+00	2.97E-03	0.00E+00	0.00E+00	0.00E+00	4.60E+00	0.00E+00	0.00E+00	0.00E+00
Well Fugitives	VOL56	0.00E+00	0.00E+00	0.00E+00	0.00E+00	0.00E+00	0.00E+00	0.00E+00	0.00E+00	0.00E+00	0.00E+00	0.00E+00	1.32E+00	0.00E+00	0.00E+00	0.00E+00
Well Fugitives	VOL57	0.00E+00	0.00E+00	0.00E+00	0.00E+00	0.00E+00	0.00E+00	0.00E+00	0.00E+00	0.00E+00	0.00E+00	0.00E+00	1.32E+00	0.00E+00	0.00E+00	0.00E+00
Well Fugitives	VOL58	0.00E+00	0.00E+00	0.00E+00	0.00E+00	0.00E+00	0.00E+00	0.00E+00	0.00E+00	0.00E+00	0.00E+00	0.00E+00	1.32E+00	0.00E+00	0.00E+00	0.00E+00
Well Fugitives	VOL59	0.00E+00	0.00E+00	0.00E+00	0.00E+00	0.00E+00	0.00E+00	0.00E+00	0.00E+00	0.00E+00	0.00E+00	0.00E+00	1.32E+00	0.00E+00	0.00E+00	0.00E+00
OCP-CPF Phase 1 Gas Fugitives - 3	VOL6	0.00E+00	9.90E-01	0.00E+00	1.23E-01	0.00E+00	0.00E+00	0.00E+00	5.84E-02	0.00E+00	0.00E+00	0.00E+00	3.19E+01	0.00E+00	0.00E+00	0.00E+00
Well Fugitives	VOL60	0.00E+00	0.00E+00	0.00E+00	0.00E+00	0.00E+00	0.00E+00	0.00E+00	0.00E+00	0.00E+00	0.00E+00	0.00E+00	1.32E+00	0.00E+00	0.00E+00	0.00E+00
Well Fugitives	VOL61	0.00E+00	0.00E+00	0.00E+00	0.00E+00	0.00E+00	0.00E+00	0.00E+00	0.00E+00	0.00E+00	0.00E+00	0.00E+00	1.32E+00	0.00E+00	0.00E+00	0.00E+00
Well Fugitives	VOL62	0.00E+00	0.00E+00	0.00E+00	0.00E+00	0.00E+00	0.00E+00	0.00E+00	0.00E+00	0.00E+00	0.00E+00	0.00E+00	1.32E+00	0.00E+00	0.00E+00	0.00E+00
Well Fugitives	VOL63	0.00E+00	0.00E+00	0.00E+00	0.00E+00	0.00E+00	0.00E+00	0.00E+00	0.00E+00	0.00E+00	0.00E+00	0.00E+00	1.32E+00	0.00E+00	0.00E+00	0.00E+00
Well Fugitives	VOL64	0.00E+00	0.00E+00	0.00E+00	0.00E+00	0.00E+00	0.00E+00	0.00E+00	0.00E+00	0.00E+00	0.00E+00	0.00E+00	1.32E+00	0.00E+00	0.00E+00	0.00E+00
Well Fugitives	VOL65	0.00E+00	0.00E+00	0.00E+00	0.00E+00	0.00E+00	0.00E+00	0.00E+00	0.00E+00	0.00E+00	0.00E+00	0.00E+00	1.32E+00	0.00E+00	0.00E+00	0.00E+00
Well Fugitives	VOL66	0.00E+00	0.00E+00	0.00E+00	0.00E+00	0.00E+00	0.00E+00	0.00E+00	0.00E+00	0.00E+00	0.00E+00	0.00E+00	1.32E+00	0.00E+00	0.00E+00	0.00E+00
Well Fugitives	VOL67	0.00E+00	0.00E+00	0.00E+00	0.00E+00	0.00E+00	0.00E+00	0.00E+00	0.00E+00	0.00E+00	0.00E+00	0.00E+00	1.32E+00	0.00E+00	0.00E+00	0.00E+00
Well Fugitives	VOL68	0.00E+00	0.00E+00	0.00E+00	0.00E+00	0.00E+00	0.00E+00	0.00E+00	0.00E+00	0.00E+00	0.00E+00	0.00E+00	1.32E+00	0.00E+00	0.00E+00	0.00E+00
Well Fugitives	VOL69	0.00E+00	0.00E+00	0.00E+00	0.00E+00	0.00E+00	0.00E+00	0.00E+00	0.00E+00	0.00E+00	0.00E+00	0.00E+00	1.32E+00	0.00E+00	0.00E+00	0.00E+00
OCP-CPF Phase 2 Oil Fugitives - 1	VOL7	0.00E+00	9.90E-01	0.00E+00	1.23E-01	0.00E+00	0.00E+00	0.00E+00	5.85E-02	0.00E+00	0.00E+00	0.00E+00	1.54E+00	0.00E+00	0.00E+00	0.00E+00

TABLE C-2: HRA Emission Sources Annual Emisisons

Source	AERMOD Source Designation	CAS Number, Pollutant Abbreviation and Emisisons (lbs/yr)														
		91203	100414	100425	106898	106934	106990	107028	107982	108883	108907	108952	110543	115071	205992	218019
		Naphthalene	Ethyl Benzene	Styrene	ɔichlorohydr	EDB	1,3-Butadiene	Acrolein	PGME	Toluene	Chlorobenzr	Phenol	Hexane	Propylene	b]fluoranth	Chrysene
Well Fugitives	VOL70	0.00E+00	0.00E+00	0.00E+00	0.00E+00	0.00E+00	0.00E+00	0.00E+00	0.00E+00	0.00E+00	0.00E+00	0.00E+00	1.32E+00	0.00E+00	0.00E+00	0.00E+00
Well Fugitives	VOL71	0.00E+00	0.00E+00	0.00E+00	0.00E+00	0.00E+00	0.00E+00	0.00E+00	0.00E+00	0.00E+00	0.00E+00	0.00E+00	1.32E+00	0.00E+00	0.00E+00	0.00E+00
Well Fugitives	VOL72	0.00E+00	0.00E+00	0.00E+00	0.00E+00	0.00E+00	0.00E+00	0.00E+00	0.00E+00	0.00E+00	0.00E+00	0.00E+00	1.32E+00	0.00E+00	0.00E+00	0.00E+00
Well Fugitives	VOL73	0.00E+00	0.00E+00	0.00E+00	0.00E+00	0.00E+00	0.00E+00	0.00E+00	0.00E+00	0.00E+00	0.00E+00	0.00E+00	1.32E+00	0.00E+00	0.00E+00	0.00E+00
Well Fugitives	VOL74	0.00E+00	0.00E+00	0.00E+00	0.00E+00	0.00E+00	0.00E+00	0.00E+00	0.00E+00	0.00E+00	0.00E+00	0.00E+00	1.32E+00	0.00E+00	0.00E+00	0.00E+00
Well Fugitives	VOL75	0.00E+00	0.00E+00	0.00E+00	0.00E+00	0.00E+00	0.00E+00	0.00E+00	0.00E+00	0.00E+00	0.00E+00	0.00E+00	1.32E+00	0.00E+00	0.00E+00	0.00E+00
Well Fugitives	VOL76	0.00E+00	0.00E+00	0.00E+00	0.00E+00	0.00E+00	0.00E+00	0.00E+00	0.00E+00	0.00E+00	0.00E+00	0.00E+00	1.32E+00	0.00E+00	0.00E+00	0.00E+00
Well Fugitives	VOL77	0.00E+00	0.00E+00	0.00E+00	0.00E+00	0.00E+00	0.00E+00	0.00E+00	0.00E+00	0.00E+00	0.00E+00	0.00E+00	1.32E+00	0.00E+00	0.00E+00	0.00E+00
Well Fugitives	VOL78	0.00E+00	0.00E+00	0.00E+00	0.00E+00	0.00E+00	0.00E+00	0.00E+00	0.00E+00	0.00E+00	0.00E+00	0.00E+00	1.32E+00	0.00E+00	0.00E+00	0.00E+00
Well Fugitives	VOL79	0.00E+00	0.00E+00	0.00E+00	0.00E+00	0.00E+00	0.00E+00	0.00E+00	0.00E+00	0.00E+00	0.00E+00	0.00E+00	1.32E+00	0.00E+00	0.00E+00	0.00E+00
OCP-CPF Phase 2 Oil Fugitives - 2	VOL8	0.00E+00	9.90E-01	0.00E+00	1.23E-01	0.00E+00	0.00E+00	0.00E+00	5.85E-02	0.00E+00	0.00E+00	0.00E+00	1.54E+00	0.00E+00	0.00E+00	0.00E+00
Well Fugitives	VOL80	0.00E+00	0.00E+00	0.00E+00	0.00E+00	0.00E+00	0.00E+00	0.00E+00	0.00E+00	0.00E+00	0.00E+00	0.00E+00	1.32E+00	0.00E+00	0.00E+00	0.00E+00
Well Fugitives	VOL81	0.00E+00	0.00E+00	0.00E+00	0.00E+00	0.00E+00	0.00E+00	0.00E+00	0.00E+00	0.00E+00	0.00E+00	0.00E+00	1.32E+00	0.00E+00	0.00E+00	0.00E+00
Well Fugitives	VOL82	0.00E+00	0.00E+00	0.00E+00	0.00E+00	0.00E+00	0.00E+00	0.00E+00	0.00E+00	0.00E+00	0.00E+00	0.00E+00	1.32E+00	0.00E+00	0.00E+00	0.00E+00
Well Fugitives	VOL83	0.00E+00	0.00E+00	0.00E+00	0.00E+00	0.00E+00	0.00E+00	0.00E+00	0.00E+00	0.00E+00	0.00E+00	0.00E+00	1.32E+00	0.00E+00	0.00E+00	0.00E+00
Well Fugitives	VOL84	0.00E+00	0.00E+00	0.00E+00	0.00E+00	0.00E+00	0.00E+00	0.00E+00	0.00E+00	0.00E+00	0.00E+00	0.00E+00	1.32E+00	0.00E+00	0.00E+00	0.00E+00
Well Fugitives	VOL85	0.00E+00	0.00E+00	0.00E+00	0.00E+00	0.00E+00	0.00E+00	0.00E+00	0.00E+00	0.00E+00	0.00E+00	0.00E+00	1.32E+00	0.00E+00	0.00E+00	0.00E+00
Well Fugitives	VOL86	0.00E+00	0.00E+00	0.00E+00	0.00E+00	0.00E+00	0.00E+00	0.00E+00	0.00E+00	0.00E+00	0.00E+00	0.00E+00	1.32E+00	0.00E+00	0.00E+00	0.00E+00
Well Fugitives	VOL87	0.00E+00	0.00E+00	0.00E+00	0.00E+00	0.00E+00	0.00E+00	0.00E+00	0.00E+00	0.00E+00	0.00E+00	0.00E+00	1.32E+00	0.00E+00	0.00E+00	0.00E+00
Well Fugitives	VOL88	0.00E+00	0.00E+00	0.00E+00	0.00E+00	0.00E+00	0.00E+00	0.00E+00	0.00E+00	0.00E+00	0.00E+00	0.00E+00	1.32E+00	0.00E+00	0.00E+00	0.00E+00
Well Fugitives	VOL89	0.00E+00	0.00E+00	0.00E+00	0.00E+00	0.00E+00	0.00E+00	0.00E+00	0.00E+00	0.00E+00	0.00E+00	0.00E+00	1.32E+00	0.00E+00	0.00E+00	0.00E+00
OCP-CPF Phase 2 Oil Fugitives - 3	VOL9	0.00E+00	9.90E-01	0.00E+00	1.23E-01	0.00E+00	0.00E+00	0.00E+00	5.85E-02	0.00E+00	0.00E+00	0.00E+00	1.54E+00	0.00E+00	0.00E+00	0.00E+00
Well Fugitives	VOL90	0.00E+00	0.00E+00	0.00E+00	0.00E+00	0.00E+00	0.00E+00	0.00E+00	0.00E+00	0.00E+00	0.00E+00	0.00E+00	1.32E+00	0.00E+00	0.00E+00	0.00E+00
Well Fugitives	VOL91	0.00E+00	0.00E+00	0.00E+00	0.00E+00	0.00E+00	0.00E+00	0.00E+00	0.00E+00	0.00E+00	0.00E+00	0.00E+00	1.32E+00	0.00E+00	0.00E+00	0.00E+00
Well Fugitives	VOL92	0.00E+00	0.00E+00	0.00E+00	0.00E+00	0.00E+00	0.00E+00	0.00E+00	0.00E+00	0.00E+00	0.00E+00	0.00E+00	1.32E+00	0.00E+00	0.00E+00	0.00E+00
Well Fugitives	VOL93	0.00E+00	0.00E+00	0.00E+00	0.00E+00	0.00E+00	0.00E+00	0.00E+00	0.00E+00	0.00E+00	0.00E+00	0.00E+00	1.32E+00	0.00E+00	0.00E+00	0.00E+00
Well Fugitives	VOL94	0.00E+00	0.00E+00	0.00E+00	0.00E+00	0.00E+00	0.00E+00	0.00E+00	0.00E+00	0.00E+00	0.00E+00	0.00E+00	1.32E+00	0.00E+00	0.00E+00	0.00E+00
Well Fugitives	VOL95	0.00E+00	0.00E+00	0.00E+00	0.00E+00	0.00E+00	0.00E+00	0.00E+00	0.00E+00	0.00E+00	0.00E+00	0.00E+00	1.32E+00	0.00E+00	0.00E+00	0.00E+00
Well Fugitives	VOL96	0.00E+00	0.00E+00	0.00E+00	0.00E+00	0.00E+00	0.00E+00	0.00E+00	0.00E+00	0.00E+00	0.00E+00	0.00E+00	1.32E+00	0.00E+00	0.00E+00	0.00E+00
Well Fugitives	VOL97	0.00E+00	0.00E+00	0.00E+00	0.00E+00	0.00E+00	0.00E+00	0.00E+00	0.00E+00	0.00E+00	0.00E+00	0.00E+00	1.32E+00	0.00E+00	0.00E+00	0.00E+00
Well Fugitives	VOL98	0.00E+00	0.00E+00	0.00E+00	0.00E+00	0.00E+00	0.00E+00	0.00E+00	0.00E+00	0.00E+00	0.00E+00	0.00E+00	1.32E+00	0.00E+00	0.00E+00	0.00E+00
Well Fugitives	VOL99	0.00E+00	0.00E+00	0.00E+00	0.00E+00	0.00E+00	0.00E+00	0.00E+00	0.00E+00	0.00E+00	0.00E+00	0.00E+00	1.32E+00	0.00E+00	0.00E+00	0.00E+00

TABLE C-2: HRA Emission Sources Annual Emisisons

Source	AERMOD Source Designation	CAS Number, Pollutant Abbreviation and Emisisons (lbs/yr)														
		1330207 Xylenes	7439965 Manganese	7439976 Mercury	7440020 Nickel	7440382 Arsenic	7440393 Barium	7440417 Beryllium	7440439 Cadmium	7440473 Chromium	7440484 Cobalt	7440508 Copper	7440622 Vanadium	7440666 Zinc	7782492 Selenium	7783064 H2S
Truck Travel	SLINE1	0.00E+00	0.00E+00	0.00E+00	0.00E+00	0.00E+00	0.00E+00	0.00E+00	0.00E+00	0.00E+00	0.00E+00	0.00E+00	0.00E+00	0.00E+00	0.00E+00	0.00E+00
10,000 Barrel 1	STCK1	0.00E+00	0.00E+00	0.00E+00	0.00E+00	0.00E+00	0.00E+00	0.00E+00	0.00E+00	0.00E+00	0.00E+00	0.00E+00	0.00E+00	0.00E+00	0.00E+00	3.40E-02
85 MMBtu SG 3	STCK10	1.40E+01	2.78E-01	1.90E-01	1.53E+00	1.46E-01	3.21E+00	8.71E-03	8.04E-01	1.02E+00	6.14E-02	6.20E-01	1.68E+00	2.11E+01	1.75E-02	0.00E+00
85 MMBtu SG 4	STCK11	1.40E+01	2.78E-01	1.90E-01	1.53E+00	1.46E-01	3.21E+00	8.71E-03	8.04E-01	1.02E+00	6.14E-02	6.20E-01	1.68E+00	2.11E+01	1.75E-02	0.00E+00
85 MMBtu SG 5	STCK12	1.40E+01	2.78E-01	1.90E-01	1.53E+00	1.46E-01	3.21E+00	8.71E-03	8.04E-01	1.02E+00	6.14E-02	6.20E-01	1.68E+00	2.11E+01	1.75E-02	0.00E+00
85 MMBtu SG 6	STCK13	1.40E+01	2.78E-01	1.90E-01	1.53E+00	1.46E-01	3.21E+00	8.71E-03	8.04E-01	1.02E+00	6.14E-02	6.20E-01	1.68E+00	2.11E+01	1.75E-02	0.00E+00
Generator	STCK14	2.27E-01	0.00E+00	0.00E+00	0.00E+00	0.00E+00	0.00E+00	0.00E+00	0.00E+00	0.00E+00	0.00E+00	0.00E+00	0.00E+00	0.00E+00	0.00E+00	0.00E+00
Emergency Flare	STCK15	1.99E-01	0.00E+00	0.00E+00	0.00E+00	0.00E+00	0.00E+00	0.00E+00	0.00E+00	0.00E+00	0.00E+00	0.00E+00	0.00E+00	0.00E+00	0.00E+00	0.00E+00
100 Barrel 1	STCK16	0.00E+00	0.00E+00	0.00E+00	0.00E+00	0.00E+00	0.00E+00	0.00E+00	0.00E+00	0.00E+00	0.00E+00	0.00E+00	0.00E+00	0.00E+00	0.00E+00	2.50E-04
100 Barrel 2	STCK17	0.00E+00	0.00E+00	0.00E+00	0.00E+00	0.00E+00	0.00E+00	0.00E+00	0.00E+00	0.00E+00	0.00E+00	0.00E+00	0.00E+00	0.00E+00	0.00E+00	2.50E-04
1,000 BBL Skim Tank 2	STCK18	0.00E+00	0.00E+00	0.00E+00	0.00E+00	0.00E+00	0.00E+00	0.00E+00	0.00E+00	0.00E+00	0.00E+00	0.00E+00	0.00E+00	0.00E+00	0.00E+00	8.00E-03
1,000 BBL Sludge Tank 2	STCK19	0.00E+00	0.00E+00	0.00E+00	0.00E+00	0.00E+00	0.00E+00	0.00E+00	0.00E+00	0.00E+00	0.00E+00	0.00E+00	0.00E+00	0.00E+00	0.00E+00	3.00E-03
10,000 Barrel 2	STCK2	0.00E+00	0.00E+00	0.00E+00	0.00E+00	0.00E+00	0.00E+00	0.00E+00	0.00E+00	0.00E+00	0.00E+00	0.00E+00	0.00E+00	0.00E+00	0.00E+00	3.40E-02
6,500 Barrel 1	STCK3	0.00E+00	0.00E+00	0.00E+00	0.00E+00	0.00E+00	0.00E+00	0.00E+00	0.00E+00	0.00E+00	0.00E+00	0.00E+00	0.00E+00	0.00E+00	0.00E+00	6.50E-02
6,500 Barrel 2	STCK4	0.00E+00	0.00E+00	0.00E+00	0.00E+00	0.00E+00	0.00E+00	0.00E+00	0.00E+00	0.00E+00	0.00E+00	0.00E+00	0.00E+00	0.00E+00	0.00E+00	6.50E-02
1,000 BBL Skim Tank 1	STCK5	0.00E+00	0.00E+00	0.00E+00	0.00E+00	0.00E+00	0.00E+00	0.00E+00	0.00E+00	0.00E+00	0.00E+00	0.00E+00	0.00E+00	0.00E+00	0.00E+00	8.00E-03
1,000 BBL Sludge Tank 1	STCK6	0.00E+00	0.00E+00	0.00E+00	0.00E+00	0.00E+00	0.00E+00	0.00E+00	0.00E+00	0.00E+00	0.00E+00	0.00E+00	0.00E+00	0.00E+00	0.00E+00	3.00E-03
62.5 MMBtu SG	STCK7	1.03E+01	2.04E-01	1.40E-01	1.13E+00	1.07E-01	2.36E+00	6.41E-03	5.91E-01	7.50E-01	4.51E-02	4.56E-01	1.23E+00	1.55E+01	1.29E-02	0.00E+00
85 MMBtu SG 1	STCK8	1.40E+01	2.78E-01	1.90E-01	1.53E+00	1.46E-01	3.21E+00	8.71E-03	8.04E-01	1.02E+00	6.14E-02	6.20E-01	1.68E+00	2.11E+01	1.75E-02	0.00E+00
85 MMBtu SG 2	STCK9	1.40E+01	2.78E-01	1.90E-01	1.53E+00	1.46E-01	3.21E+00	8.71E-03	8.04E-01	1.02E+00	6.14E-02	6.20E-01	1.68E+00	2.11E+01	1.75E-02	0.00E+00
OCP-CPF Phase 1 Oil Fugitives - 1	VOL1	3.84E+00	0.00E+00	0.00E+00	0.00E+00	0.00E+00	0.00E+00	0.00E+00	0.00E+00	0.00E+00	0.00E+00	0.00E+00	0.00E+00	0.00E+00	0.00E+00	2.78E-04
OCP-CPF Phase 2 Gas Fugitives - 1	VOL10	3.84E+00	0.00E+00	0.00E+00	0.00E+00	0.00E+00	0.00E+00	0.00E+00	0.00E+00	0.00E+00	0.00E+00	0.00E+00	0.00E+00	0.00E+00	0.00E+00	1.24E-02
Well Fugitives	VOL100	0.00E+00	0.00E+00	0.00E+00	0.00E+00	0.00E+00	0.00E+00	0.00E+00	0.00E+00	0.00E+00	0.00E+00	0.00E+00	0.00E+00	0.00E+00	0.00E+00	1.03E+00
Well Fugitives	VOL101	0.00E+00	0.00E+00	0.00E+00	0.00E+00	0.00E+00	0.00E+00	0.00E+00	0.00E+00	0.00E+00	0.00E+00	0.00E+00	0.00E+00	0.00E+00	0.00E+00	1.03E+00
Well Fugitives	VOL102	0.00E+00	0.00E+00	0.00E+00	0.00E+00	0.00E+00	0.00E+00	0.00E+00	0.00E+00	0.00E+00	0.00E+00	0.00E+00	0.00E+00	0.00E+00	0.00E+00	1.03E+00
Well Fugitives	VOL103	0.00E+00	0.00E+00	0.00E+00	0.00E+00	0.00E+00	0.00E+00	0.00E+00	0.00E+00	0.00E+00	0.00E+00	0.00E+00	0.00E+00	0.00E+00	0.00E+00	1.03E+00
Well Fugitives	VOL104	0.00E+00	0.00E+00	0.00E+00	0.00E+00	0.00E+00	0.00E+00	0.00E+00	0.00E+00	0.00E+00	0.00E+00	0.00E+00	0.00E+00	0.00E+00	0.00E+00	1.03E+00
Well Fugitives	VOL105	0.00E+00	0.00E+00	0.00E+00	0.00E+00	0.00E+00	0.00E+00	0.00E+00	0.00E+00	0.00E+00	0.00E+00	0.00E+00	0.00E+00	0.00E+00	0.00E+00	1.03E+00
Well Fugitives	VOL106	0.00E+00	0.00E+00	0.00E+00	0.00E+00	0.00E+00	0.00E+00	0.00E+00	0.00E+00	0.00E+00	0.00E+00	0.00E+00	0.00E+00	0.00E+00	0.00E+00	1.03E+00
Well Fugitives	VOL107	0.00E+00	0.00E+00	0.00E+00	0.00E+00	0.00E+00	0.00E+00	0.00E+00	0.00E+00	0.00E+00	0.00E+00	0.00E+00	0.00E+00	0.00E+00	0.00E+00	1.03E+00
Well Fugitives	VOL108	0.00E+00	0.00E+00	0.00E+00	0.00E+00	0.00E+00	0.00E+00	0.00E+00	0.00E+00	0.00E+00	0.00E+00	0.00E+00	0.00E+00	0.00E+00	0.00E+00	1.03E+00
Well Fugitives	VOL109	0.00E+00	0.00E+00	0.00E+00	0.00E+00	0.00E+00	0.00E+00	0.00E+00	0.00E+00	0.00E+00	0.00E+00	0.00E+00	0.00E+00	0.00E+00	0.00E+00	1.03E+00
OCP-CPF Phase 2 Gas Fugitives - 2	VOL11	3.84E+00	0.00E+00	0.00E+00	0.00E+00	0.00E+00	0.00E+00	0.00E+00	0.00E+00	0.00E+00	0.00E+00	0.00E+00	0.00E+00	0.00E+00	0.00E+00	1.24E-02
Well Fugitives	VOL110	0.00E+00	0.00E+00	0.00E+00	0.00E+00	0.00E+00	0.00E+00	0.00E+00	0.00E+00	0.00E+00	0.00E+00	0.00E+00	0.00E+00	0.00E+00	0.00E+00	1.03E+00
Well Fugitives	VOL111	0.00E+00	0.00E+00	0.00E+00	0.00E+00	0.00E+00	0.00E+00	0.00E+00	0.00E+00	0.00E+00	0.00E+00	0.00E+00	0.00E+00	0.00E+00	0.00E+00	1.03E+00
Well Fugitives	VOL112	0.00E+00	0.00E+00	0.00E+00	0.00E+00	0.00E+00	0.00E+00	0.00E+00	0.00E+00	0.00E+00	0.00E+00	0.00E+00	0.00E+00	0.00E+00	0.00E+00	1.03E+00
Well Fugitives	VOL113	0.00E+00	0.00E+00	0.00E+00	0.00E+00	0.00E+00	0.00E+00	0.00E+00	0.00E+00	0.00E+00	0.00E+00	0.00E+00	0.00E+00	0.00E+00	0.00E+00	1.03E+00
Well Fugitives	VOL114	0.00E+00	0.00E+00	0.00E+00	0.00E+00	0.00E+00	0.00E+00	0.00E+00	0.00E+00	0.00E+00	0.00E+00	0.00E+00	0.00E+00	0.00E+00	0.00E+00	1.03E+00
Well Fugitives	VOL115	0.00E+00	0.00E+00	0.00E+00	0.00E+00	0.00E+00	0.00E+00	0.00E+00	0.00E+00	0.00E+00	0.00E+00	0.00E+00	0.00E+00	0.00E+00	0.00E+00	1.03E+00
Well Fugitives	VOL116	0.00E+00	0.00E+00	0.00E+00	0.00E+00	0.00E+00	0.00E+00	0.00E+00	0.00E+00	0.00E+00	0.00E+00	0.00E+00	0.00E+00	0.00E+00	0.00E+00	1.03E+00
Well Fugitives	VOL117	0.00E+00	0.00E+00	0.00E+00	0.00E+00	0.00E+00	0.00E+00	0.00E+00	0.00E+00	0.00E+00	0.00E+00	0.00E+00	0.00E+00	0.00E+00	0.00E+00	1.03E+00
Well Fugitives	VOL118	0.00E+00	0.00E+00	0.00E+00	0.00E+00	0.00E+00	0.00E+00	0.00E+00	0.00E+00	0.00E+00	0.00E+00	0.00E+00	0.00E+00	0.00E+00	0.00E+00	1.03E+00
Well Fugitives	VOL119	0.00E+00	0.00E+00	0.00E+00	0.00E+00	0.00E+00	0.00E+00	0.00E+00	0.00E+00	0.00E+00	0.00E+00	0.00E+00	0.00E+00	0.00E+00	0.00E+00	1.03E+00
OCP-CPF Phase 2 Gas Fugitives - 3	VOL12	3.84E+00	0.00E+00	0.00E+00	0.00E+00	0.00E+00	0.00E+00	0.00E+00	0.00E+00	0.00E+00	0.00E+00	0.00E+00	0.00E+00	0.00E+00	0.00E+00	1.24E-02
Well Fugitives	VOL120	0.00E+00	0.00E+00	0.00E+00	0.00E+00	0.00E+00	0.00E+00	0.00E+00	0.00E+00	0.00E+00	0.00E+00	0.00E+00	0.00E+00	0.00E+00	0.00E+00	1.03E+00
Well Fugitives	VOL121	0.00E+00	0.00E+00	0.00E+00	0.00E+00	0.00E+00	0.00E+00	0.00E+00	0.00E+00	0.00E+00	0.00E+00	0.00E+00	0.00E+00	0.00E+00	0.00E+00	1.03E+00
Well Fugitives	VOL122	0.00E+00	0.00E+00	0.00E+00	0.00E+00	0.00E+00	0.00E+00	0.00E+00	0.00E+00	0.00E+00	0.00E+00	0.00E+00	0.00E+00	0.00E+00	0.00E+00	1.03E+00
Well Fugitives	VOL123	0.00E+00	0.00E+00	0.00E+00	0.00E+00	0.00E+00	0.00E+00	0.00E+00	0.00E+00	0.00E+00	0.00E+00	0.00E+00	0.00E+00	0.00E+00	0.00E+00	1.03E+00
Well Fugitives	VOL124	0.00E+00	0.00E+00	0.00E+00	0.00E+00	0.00E+00	0.00E+00	0.00E+00	0.00E+00	0.00E+00	0.00E+00	0.00E+00	0.00E+00	0.00E+00	0.00E+00	1.03E+00
Well Fugitives	VOL125	0.00E+00	0.00E+00	0.00E+00	0.00E+00	0.00E+00	0.00E+00	0.00E+00	0.00E+00	0.00E+00	0.00E+00	0.00E+00	0.00E+00	0.00E+00	0.00E+00	1.03E+00
Well Fugitives	VOL126	0.00E+00	0.00E+00	0.00E+00	0.00E+00	0.00E+00	0.00E+00	0.00E+00	0.00E+00	0.00E+00	0.00E+00	0.00E+00	0.00E+00	0.00E+00	0.00E+00	1.03E+00
Well Fugitives	VOL127	0.00E+00	0.00E+00	0.00E+00	0.00E+00	0.00E+00	0.00E+00	0.00E+00	0.00E+00	0.00E+00	0.00E+00	0.00E+00	0.00E+00	0.00E+00	0.00E+00	1.03E+00
Well Fugitives	VOL128	0.00E+00	0.00E+00	0.00E+00	0.00E+00	0.00E+00	0.00E+00	0.00E+00	0.00E+00	0.00E+00	0.00E+00	0.00E+00	0.00E+00	0.00E+00	0.00E+00	1.03E+00
Well Fugitives	VOL129	0.00E+00	0.00E+00	0.00E+00	0.00E+00	0.00E+00	0.00E+00	0.00E+00	0.00E+00	0.00E+00	0.00E+00	0.00E+00	0.00E+00	0.00E+00	0.00E+00	1.03E+00
SCP/CPP Oil Fugitives - 1	VOL13	7.85E+00	0.00E+00	0.00E+00	0.00E+00	0.00E+00	0.00E+00	0.00E+00	0.00E+00	0.00E+00	0.00E+00	0.00E+00	0.00E+00	0.00E+00	0.00E+00	4.95E-04
Well Fugitives	VOL130	0.00E+00	0.00E+00	0.00E+00	0.00E+00	0.00E+00	0.00E+00	0.00E+00	0.00E+00	0.00E+00	0.00E+00	0.00E+00	0.00E+00	0.00E+00	0.00E+00	1.03E+00
Well Fugitives	VOL131	0.00E+00	0.00E+00	0.00E+00	0.00E+00	0.00E+00	0.00E+00	0.00E+00	0.00E+00	0.00E+00	0.00E+00	0.00E+00	0.00E+00	0.00E+00	0.00E+00	1.03E+00
Well Fugitives	VOL132	0.00E+00	0.00E+00	0.00E+00	0.00E+00	0.00E+00	0.00E+00	0.00E+00	0.00E+00	0.00E+00	0.00E+00	0.00E+00	0.00E+00	0.00E+00	0.00E+00	1.03E+00
Well Fugitives	VOL133	0.00E+00	0.00E+00	0.00E+00	0.00E+00	0.00E+00	0.00E+00	0.00E+00	0.00E+00	0.00E+00	0.00E+00	0.00E+00	0.00E+00	0.00E+00	0.00E+00	1.03E+00
Brine Tanks Solvent Use Toxics	VOL134	0.00E+00	0.00E+00	0.00E+00	0.00E+00	0.00E+00	0.00E+00	0.00E+00	0.00E+00	0.00E+00	0.00E+00	0.00E+00	0.00E+00	0.00E+00	0.00E+00	0.00E+00
WSP Solvent Use Toxics	VOL135	9.16E+00	0.00E+00	0.00E+00	0.00E+00	0.00E+00	0.00E+00	0.00E+00	0.00E+00	0.00E+00	0.00E+00	0.00E+00	0.00E+00	0.00E+00	0.00E+00	0.00E+00
WSP Solvent Use Toxics	VOL136	9.16E+00	0.00E+00	0.00E+00	0.00E+00	0.00E+00	0.00E+00	0.00E+00	0.00E+00	0.00E+00	0.00E+00	0.00E+00	0.00E+00	0.00E+00	0.00E+00	0.00E+00
WSP Solvent Use Toxics	VOL137	9.16E+00	0.00E+00	0.00E+00	0.00E+00	0.00E+00	0.00E+00	0.00E+00	0.00E+00	0.00E+00	0.00E+00	0.00E+00	0.00E+00	0.00E+00	0.00E+00	0.00E+00
WSP Solvent Use Toxics	VOL138	9.16E+00	0.00E+00	0.00E+00	0.00E+00	0.00E+00	0.00E+00	0.00E+00	0.00E+00	0.00E+00	0.00E+00	0.00E+00	0.00E+00	0.00E+00	0.00E+00	0.00E+00

TABLE C-2: HRA Emission Sources Annual Emisisons

Source	AERMOD Source Designation	CAS Number, Pollutant Abbreviation and Emisisons (lbs/yr)														
		1330207	7439965	7439976	7440020	7440382	7440393	7440417	7440439	7440473	7440484	7440508	7440622	7440666	7782492	7783064
		Xylenes	Manganese	Mercury	Nickel	Arsenic	Barium	Beryllium	Cadmium	Chromium	Cobalt	Copper	Vanadium	Zinc	Selenium	H2S
WSP Solvent Use Toxics	VOL139	9.16E+00	0.00E+00	0.00E+00	0.00E+00	0.00E+00	0.00E+00	0.00E+00	0.00E+00	0.00E+00	0.00E+00	0.00E+00	0.00E+00	0.00E+00	0.00E+00	0.00E+00
SCP/CPP Oil Fugitives - 2	VOL14	7.85E+00	0.00E+00	0.00E+00	0.00E+00	0.00E+00	0.00E+00	0.00E+00	0.00E+00	0.00E+00	0.00E+00	0.00E+00	0.00E+00	0.00E+00	0.00E+00	4.95E-04
SCP/CPP Oil Fugitives - 3	VOL15	7.85E+00	0.00E+00	0.00E+00	0.00E+00	0.00E+00	0.00E+00	0.00E+00	0.00E+00	0.00E+00	0.00E+00	0.00E+00	0.00E+00	0.00E+00	0.00E+00	4.95E-04
SCP/CPP Oil Fugitives - 4	VOL16	7.85E+00	0.00E+00	0.00E+00	0.00E+00	0.00E+00	0.00E+00	0.00E+00	0.00E+00	0.00E+00	0.00E+00	0.00E+00	0.00E+00	0.00E+00	0.00E+00	4.95E-04
SCP/CPP Oil Fugitives - 5	VOL17	7.85E+00	0.00E+00	0.00E+00	0.00E+00	0.00E+00	0.00E+00	0.00E+00	0.00E+00	0.00E+00	0.00E+00	0.00E+00	0.00E+00	0.00E+00	0.00E+00	4.95E-04
SCP/CPP Gas Fugitives - 1	VOL18	7.85E+00	0.00E+00	0.00E+00	0.00E+00	0.00E+00	0.00E+00	0.00E+00	0.00E+00	0.00E+00	0.00E+00	0.00E+00	0.00E+00	0.00E+00	0.00E+00	2.31E-02
SCP/CPP Gas Fugitives - 2	VOL19	7.85E+00	0.00E+00	0.00E+00	0.00E+00	0.00E+00	0.00E+00	0.00E+00	0.00E+00	0.00E+00	0.00E+00	0.00E+00	0.00E+00	0.00E+00	0.00E+00	2.31E-02
OCP-CPF Phase 1 Oil Fugitives - 2	VOL2	3.84E+00	0.00E+00	0.00E+00	0.00E+00	0.00E+00	0.00E+00	0.00E+00	0.00E+00	0.00E+00	0.00E+00	0.00E+00	0.00E+00	0.00E+00	0.00E+00	2.78E-04
SCP/CPP Gas Fugitives - 3	VOL20	7.85E+00	0.00E+00	0.00E+00	0.00E+00	0.00E+00	0.00E+00	0.00E+00	0.00E+00	0.00E+00	0.00E+00	0.00E+00	0.00E+00	0.00E+00	0.00E+00	2.31E-02
SCP/CPP Gas Fugitives - 4	VOL21	7.85E+00	0.00E+00	0.00E+00	0.00E+00	0.00E+00	0.00E+00	0.00E+00	0.00E+00	0.00E+00	0.00E+00	0.00E+00	0.00E+00	0.00E+00	0.00E+00	2.31E-02
SCP/CPP Gas Fugitives - 5	VOL22	7.85E+00	0.00E+00	0.00E+00	0.00E+00	0.00E+00	0.00E+00	0.00E+00	0.00E+00	0.00E+00	0.00E+00	0.00E+00	0.00E+00	0.00E+00	0.00E+00	2.31E-02
LOS/COS Oil Fugitives	VOL23	3.16E+01	0.00E+00	0.00E+00	0.00E+00	0.00E+00	0.00E+00	0.00E+00	0.00E+00	0.00E+00	0.00E+00	0.00E+00	0.00E+00	0.00E+00	0.00E+00	1.38E-03
LOS/COS Gas Fugitives	VOL24	3.16E+01	0.00E+00	0.00E+00	0.00E+00	0.00E+00	0.00E+00	0.00E+00	0.00E+00	0.00E+00	0.00E+00	0.00E+00	0.00E+00	0.00E+00	0.00E+00	5.20E-02
Phase 1 WCP Oil Fugitives - 1	VOL25	3.74E+00	0.00E+00	0.00E+00	0.00E+00	0.00E+00	0.00E+00	0.00E+00	0.00E+00	0.00E+00	0.00E+00	0.00E+00	0.00E+00	0.00E+00	0.00E+00	5.63E-04
Phase 1 WCP Oil Fugitives - 2	VOL26	3.74E+00	0.00E+00	0.00E+00	0.00E+00	0.00E+00	0.00E+00	0.00E+00	0.00E+00	0.00E+00	0.00E+00	0.00E+00	0.00E+00	0.00E+00	0.00E+00	5.63E-04
Phase 1 WCP Gas Fugitives - 1	VOL27	3.74E+00	0.00E+00	0.00E+00	0.00E+00	0.00E+00	0.00E+00	0.00E+00	0.00E+00	0.00E+00	0.00E+00	0.00E+00	0.00E+00	0.00E+00	0.00E+00	1.03E-02
Phase 1 WCP Gas Fugitives - 2	VOL28	3.74E+00	0.00E+00	0.00E+00	0.00E+00	0.00E+00	0.00E+00	0.00E+00	0.00E+00	0.00E+00	0.00E+00	0.00E+00	0.00E+00	0.00E+00	0.00E+00	1.03E-02
Phase 2 WCP Oil Fugitives - 1	VOL29	3.74E+00	0.00E+00	0.00E+00	0.00E+00	0.00E+00	0.00E+00	0.00E+00	0.00E+00	0.00E+00	0.00E+00	0.00E+00	0.00E+00	0.00E+00	0.00E+00	5.63E-04
OCP-CPF Phase 1 Oil Fugitives - 3	VOL3	3.84E+00	0.00E+00	0.00E+00	0.00E+00	0.00E+00	0.00E+00	0.00E+00	0.00E+00	0.00E+00	0.00E+00	0.00E+00	0.00E+00	0.00E+00	0.00E+00	2.78E-04
Phase 2 WCP Oil Fugitives - 2	VOL30	3.74E+00	0.00E+00	0.00E+00	0.00E+00	0.00E+00	0.00E+00	0.00E+00	0.00E+00	0.00E+00	0.00E+00	0.00E+00	0.00E+00	0.00E+00	0.00E+00	5.63E-04
Phase 2 WCP Gas Fugitives - 1	VOL31	3.74E+00	0.00E+00	0.00E+00	0.00E+00	0.00E+00	0.00E+00	0.00E+00	0.00E+00	0.00E+00	0.00E+00	0.00E+00	0.00E+00	0.00E+00	0.00E+00	1.03E-02
Phase 2 WCP Gas Fugitives - 2	VOL32	3.74E+00	0.00E+00	0.00E+00	0.00E+00	0.00E+00	0.00E+00	0.00E+00	0.00E+00	0.00E+00	0.00E+00	0.00E+00	0.00E+00	0.00E+00	0.00E+00	1.03E-02
LACT Oil Fugitives - 1	VOL33	3.48E-01	0.00E+00	0.00E+00	0.00E+00	0.00E+00	0.00E+00	0.00E+00	0.00E+00	0.00E+00	0.00E+00	0.00E+00	0.00E+00	0.00E+00	0.00E+00	5.56E-04
LACT Oil Fugitives - 2	VOL34	3.48E-01	0.00E+00	0.00E+00	0.00E+00	0.00E+00	0.00E+00	0.00E+00	0.00E+00	0.00E+00	0.00E+00	0.00E+00	0.00E+00	0.00E+00	0.00E+00	2.78E-04
LACT Oil Fugitives - 3	VOL35	3.48E-01	0.00E+00	0.00E+00	0.00E+00	0.00E+00	0.00E+00	0.00E+00	0.00E+00	0.00E+00	0.00E+00	0.00E+00	0.00E+00	0.00E+00	0.00E+00	8.75E-05
LACT Gas Fugitives - 1	VOL36	3.48E-01	0.00E+00	0.00E+00	0.00E+00	0.00E+00	0.00E+00	0.00E+00	0.00E+00	0.00E+00	0.00E+00	0.00E+00	0.00E+00	0.00E+00	0.00E+00	4.11E-03
LACT Gas Fugitives - 2	VOL37	3.48E-01	0.00E+00	0.00E+00	0.00E+00	0.00E+00	0.00E+00	0.00E+00	0.00E+00	0.00E+00	0.00E+00	0.00E+00	0.00E+00	0.00E+00	0.00E+00	2.05E-03
LACT Gas Fugitives - 3	VOL38	3.48E-01	0.00E+00	0.00E+00	0.00E+00	0.00E+00	0.00E+00	0.00E+00	0.00E+00	0.00E+00	0.00E+00	0.00E+00	0.00E+00	0.00E+00	0.00E+00	0.00E+00
Sulfurox Gas Fugitives - 1	VOL39	6.71E-01	0.00E+00	0.00E+00	0.00E+00	0.00E+00	0.00E+00	0.00E+00	0.00E+00	0.00E+00	0.00E+00	0.00E+00	0.00E+00	0.00E+00	0.00E+00	1.67E+01
OCP-CPF Phase 1 Gas Fugitives - 1	VOL4	3.84E+00	0.00E+00	0.00E+00	0.00E+00	0.00E+00	0.00E+00	0.00E+00	0.00E+00	0.00E+00	0.00E+00	0.00E+00	0.00E+00	0.00E+00	0.00E+00	1.42E-02
Sulfurox Gas Fugitives - 2	VOL40	6.71E-01	0.00E+00	0.00E+00	0.00E+00	0.00E+00	0.00E+00	0.00E+00	0.00E+00	0.00E+00	0.00E+00	0.00E+00	0.00E+00	0.00E+00	0.00E+00	1.67E+01
Sulfurox Gas Fugitives - 3	VOL41	6.71E-01	0.00E+00	0.00E+00	0.00E+00	0.00E+00	0.00E+00	0.00E+00	0.00E+00	0.00E+00	0.00E+00	0.00E+00	0.00E+00	0.00E+00	0.00E+00	1.67E+01
Sulfurox GasFugitives - 4	VOL42	6.71E-01	0.00E+00	0.00E+00	0.00E+00	0.00E+00	0.00E+00	0.00E+00	0.00E+00	0.00E+00	0.00E+00	0.00E+00	0.00E+00	0.00E+00	0.00E+00	1.67E+01
Sulfurox Gas Fugitives - 5	VOL43	6.71E-01	0.00E+00	0.00E+00	0.00E+00	0.00E+00	0.00E+00	0.00E+00	0.00E+00	0.00E+00	0.00E+00	0.00E+00	0.00E+00	0.00E+00	0.00E+00	1.67E+01
Sulfurox Gas Fugitives - 6	VOL44	6.71E-01	0.00E+00	0.00E+00	0.00E+00	0.00E+00	0.00E+00	0.00E+00	0.00E+00	0.00E+00	0.00E+00	0.00E+00	0.00E+00	0.00E+00	0.00E+00	1.67E+01
Sulfurox Gas Fugitives - 7	VOL45	6.71E-01	0.00E+00	0.00E+00	0.00E+00	0.00E+00	0.00E+00	0.00E+00	0.00E+00	0.00E+00	0.00E+00	0.00E+00	0.00E+00	0.00E+00	0.00E+00	1.67E+01
Sulfurox Gas Fugitives - 8	VOL46	6.71E-01	0.00E+00	0.00E+00	0.00E+00	0.00E+00	0.00E+00	0.00E+00	0.00E+00	0.00E+00	0.00E+00	0.00E+00	0.00E+00	0.00E+00	0.00E+00	1.67E+01
PGTP All Fugitives V-5880 P-5890 P59	VOL47	1.96E-01	0.00E+00	0.00E+00	0.00E+00	0.00E+00	0.00E+00	0.00E+00	0.00E+00	0.00E+00	0.00E+00	0.00E+00	0.00E+00	0.00E+00	0.00E+00	7.68E-03
PGTP and GS Fugitives FF-5030 FF-50	VOL48	3.83E+00	0.00E+00	0.00E+00	0.00E+00	0.00E+00	0.00E+00	0.00E+00	0.00E+00	0.00E+00	0.00E+00	0.00E+00	0.00E+00	0.00E+00	0.00E+00	1.46E+02
PGTP Fugitives P-5980 P-5990 V-5970	VOL49	3.13E+00	0.00E+00	0.00E+00	0.00E+00	0.00E+00	0.00E+00	0.00E+00	0.00E+00	0.00E+00	0.00E+00	0.00E+00	0.00E+00	0.00E+00	0.00E+00	3.51E+01
OCP-CPF Phase 1 Gas Fugitives - 2	VOL5	3.84E+00	0.00E+00	0.00E+00	0.00E+00	0.00E+00	0.00E+00	0.00E+00	0.00E+00	0.00E+00	0.00E+00	0.00E+00	0.00E+00	0.00E+00	0.00E+00	1.42E-02
PGTP Fugitives V-5670 V-5660	VOL50	3.13E+00	0.00E+00	0.00E+00	0.00E+00	0.00E+00	0.00E+00	0.00E+00	0.00E+00	0.00E+00	0.00E+00	0.00E+00	0.00E+00	0.00E+00	0.00E+00	6.28E+01
PGSG Fugitives SG-6030 V-6050	VOL51	1.96E-01	0.00E+00	0.00E+00	0.00E+00	0.00E+00	0.00E+00	0.00E+00	0.00E+00	0.00E+00	0.00E+00	0.00E+00	0.00E+00	0.00E+00	0.00E+00	1.25E-02
OCP-GS FF-1510 FF-1520 HX-1080 HX	VOL52	9.05E+00	0.00E+00	0.00E+00	0.00E+00	0.00E+00	0.00E+00	0.00E+00	0.00E+00	0.00E+00	0.00E+00	0.00E+00	0.00E+00	0.00E+00	0.00E+00	7.12E-02
Loading Rack 1	VOL53	0.00E+00	0.00E+00	0.00E+00	0.00E+00	0.00E+00	0.00E+00	0.00E+00	0.00E+00	0.00E+00	0.00E+00	0.00E+00	0.00E+00	0.00E+00	0.00E+00	1.09E-01
Loading Rack 2	VOL54	0.00E+00	0.00E+00	0.00E+00	0.00E+00	0.00E+00	0.00E+00	0.00E+00	0.00E+00	0.00E+00	0.00E+00	0.00E+00	0.00E+00	0.00E+00	0.00E+00	1.09E-01
Flare Gas Fugitives F5910	VOL55	1.96E-01	0.00E+00	0.00E+00	0.00E+00	0.00E+00	0.00E+00	0.00E+00	0.00E+00	0.00E+00	0.00E+00	0.00E+00	0.00E+00	0.00E+00	0.00E+00	2.05E-03
Well Fugitives	VOL56	0.00E+00	0.00E+00	0.00E+00	0.00E+00	0.00E+00	0.00E+00	0.00E+00	0.00E+00	0.00E+00	0.00E+00	0.00E+00	0.00E+00	0.00E+00	0.00E+00	1.03E+00
Well Fugitives	VOL57	0.00E+00	0.00E+00	0.00E+00	0.00E+00	0.00E+00	0.00E+00	0.00E+00	0.00E+00	0.00E+00	0.00E+00	0.00E+00	0.00E+00	0.00E+00	0.00E+00	1.03E+00
Well Fugitives	VOL58	0.00E+00	0.00E+00	0.00E+00	0.00E+00	0.00E+00	0.00E+00	0.00E+00	0.00E+00	0.00E+00	0.00E+00	0.00E+00	0.00E+00	0.00E+00	0.00E+00	1.03E+00
Well Fugitives	VOL59	0.00E+00	0.00E+00	0.00E+00	0.00E+00	0.00E+00	0.00E+00	0.00E+00	0.00E+00	0.00E+00	0.00E+00	0.00E+00	0.00E+00	0.00E+00	0.00E+00	1.03E+00
OCP-CPF Phase 1 Gas Fugitives - 3	VOL6	3.84E+00	0.00E+00	0.00E+00	0.00E+00	0.00E+00	0.00E+00	0.00E+00	0.00E+00	0.00E+00	0.00E+00	0.00E+00	0.00E+00	0.00E+00	0.00E+00	1.42E-02
Well Fugitives	VOL60	0.00E+00	0.00E+00	0.00E+00	0.00E+00	0.00E+00	0.00E+00	0.00E+00	0.00E+00	0.00E+00	0.00E+00	0.00E+00	0.00E+00	0.00E+00	0.00E+00	1.03E+00
Well Fugitives	VOL61	0.00E+00	0.00E+00	0.00E+00	0.00E+00	0.00E+00	0.00E+00	0.00E+00	0.00E+00	0.00E+00	0.00E+00	0.00E+00	0.00E+00	0.00E+00	0.00E+00	1.03E+00
Well Fugitives	VOL62	0.00E+00	0.00E+00	0.00E+00	0.00E+00	0.00E+00	0.00E+00	0.00E+00	0.00E+00	0.00E+00	0.00E+00	0.00E+00	0.00E+00	0.00E+00	0.00E+00	1.03E+00
Well Fugitives	VOL63	0.00E+00	0.00E+00	0.00E+00	0.00E+00	0.00E+00	0.00E+00	0.00E+00	0.00E+00	0.00E+00	0.00E+00	0.00E+00	0.00E+00	0.00E+00	0.00E+00	1.03E+00
Well Fugitives	VOL64	0.00E+00	0.00E+00	0.00E+00	0.00E+00	0.00E+00	0.00E+00	0.00E+00	0.00E+00	0.00E+00	0.00E+00	0.00E+00	0.00E+00	0.00E+00	0.00E+00	1.03E+00
Well Fugitives	VOL65	0.00E+00	0.00E+00	0.00E+00	0.00E+00	0.00E+00	0.00E+00	0.00E+00	0.00E+00	0.00E+00	0.00E+00	0.00E+00	0.00E+00	0.00E+00	0.00E+00	1.03E+00
Well Fugitives	VOL66	0.00E+00	0.00E+00	0.00E+00	0.00E+00	0.00E+00	0.00E+00	0.00E+00	0.00E+00	0.00E+00	0.00E+00	0.00E+00	0.00E+00	0.00E+00	0.00E+00	1.03E+00
Well Fugitives	VOL67	0.00E+00	0.00E+00	0.00E+00	0.00E+00	0.00E+00	0.00E+00	0.00E+00	0.00E+00	0.00E+00	0.00E+00	0.00E+00	0.00E+00	0.00E+00	0.00E+00	1.03E+00
Well Fugitives	VOL68	0.00E+00	0.00E+00	0.00E+00	0.00E+00	0.00E+00	0.00E+00	0.00E+00	0.00E+00	0.00E+00	0.00E+00	0.00E+00	0.00E+00	0.00E+00	0.00E+00	1.03E+00
Well Fugitives	VOL69	0.00E+00	0.00E+00	0.00E+00	0.00E+00	0.00E+00	0.00E+00	0.00E+00	0.00E+00	0.00E+00	0.00E+00	0.00E+00	0.00E+00	0.00E+00	0.00E+00	1.03E+00
OCP-CPF Phase 2 Oil Fugitives - 1	VOL7	3.84E+00	0.00E+00	0.00E+00	0.00E+00	0.00E+00	0.00E+00	0.00E+00	0.00E+00	0.00E+00	0.00E+00	0.00E+00	0.00E+00	0.00E+00	0.00E+00	2.40E-04

TABLE C-2: HRA Emission Sources Annual Emisisons

Source	AERMOD Source Designation	CAS Number, Pollutant Abbreviation and Emisisons (lbs/yr)														
		1330207 Xylenes	7439965 Manganese	7439976 Mercury	7440020 Nickel	7440382 Arsenic	7440393 Barium	7440417 Beryllium	7440439 Cadmium	7440473 Chromium	7440484 Cobalt	7440508 Copper	7440622 Vanadium	7440666 Zinc	7782492 Selenium	7783064 H2S
Well Fugitives	VOL70	0.00E+00	0.00E+00	0.00E+00	0.00E+00	0.00E+00	0.00E+00	0.00E+00	0.00E+00	0.00E+00	0.00E+00	0.00E+00	0.00E+00	0.00E+00	0.00E+00	1.03E+00
Well Fugitives	VOL71	0.00E+00	0.00E+00	0.00E+00	0.00E+00	0.00E+00	0.00E+00	0.00E+00	0.00E+00	0.00E+00	0.00E+00	0.00E+00	0.00E+00	0.00E+00	0.00E+00	1.03E+00
Well Fugitives	VOL72	0.00E+00	0.00E+00	0.00E+00	0.00E+00	0.00E+00	0.00E+00	0.00E+00	0.00E+00	0.00E+00	0.00E+00	0.00E+00	0.00E+00	0.00E+00	0.00E+00	1.03E+00
Well Fugitives	VOL73	0.00E+00	0.00E+00	0.00E+00	0.00E+00	0.00E+00	0.00E+00	0.00E+00	0.00E+00	0.00E+00	0.00E+00	0.00E+00	0.00E+00	0.00E+00	0.00E+00	1.03E+00
Well Fugitives	VOL74	0.00E+00	0.00E+00	0.00E+00	0.00E+00	0.00E+00	0.00E+00	0.00E+00	0.00E+00	0.00E+00	0.00E+00	0.00E+00	0.00E+00	0.00E+00	0.00E+00	1.03E+00
Well Fugitives	VOL75	0.00E+00	0.00E+00	0.00E+00	0.00E+00	0.00E+00	0.00E+00	0.00E+00	0.00E+00	0.00E+00	0.00E+00	0.00E+00	0.00E+00	0.00E+00	0.00E+00	1.03E+00
Well Fugitives	VOL76	0.00E+00	0.00E+00	0.00E+00	0.00E+00	0.00E+00	0.00E+00	0.00E+00	0.00E+00	0.00E+00	0.00E+00	0.00E+00	0.00E+00	0.00E+00	0.00E+00	1.03E+00
Well Fugitives	VOL77	0.00E+00	0.00E+00	0.00E+00	0.00E+00	0.00E+00	0.00E+00	0.00E+00	0.00E+00	0.00E+00	0.00E+00	0.00E+00	0.00E+00	0.00E+00	0.00E+00	1.03E+00
Well Fugitives	VOL78	0.00E+00	0.00E+00	0.00E+00	0.00E+00	0.00E+00	0.00E+00	0.00E+00	0.00E+00	0.00E+00	0.00E+00	0.00E+00	0.00E+00	0.00E+00	0.00E+00	1.03E+00
Well Fugitives	VOL79	0.00E+00	0.00E+00	0.00E+00	0.00E+00	0.00E+00	0.00E+00	0.00E+00	0.00E+00	0.00E+00	0.00E+00	0.00E+00	0.00E+00	0.00E+00	0.00E+00	1.03E+00
OCP-CPF Phase 2 Oil Fugitives - 2	VOL8	3.84E+00	0.00E+00	0.00E+00	0.00E+00	0.00E+00	0.00E+00	0.00E+00	0.00E+00	0.00E+00	0.00E+00	0.00E+00	0.00E+00	0.00E+00	0.00E+00	2.40E-04
Well Fugitives	VOL80	0.00E+00	0.00E+00	0.00E+00	0.00E+00	0.00E+00	0.00E+00	0.00E+00	0.00E+00	0.00E+00	0.00E+00	0.00E+00	0.00E+00	0.00E+00	0.00E+00	1.03E+00
Well Fugitives	VOL81	0.00E+00	0.00E+00	0.00E+00	0.00E+00	0.00E+00	0.00E+00	0.00E+00	0.00E+00	0.00E+00	0.00E+00	0.00E+00	0.00E+00	0.00E+00	0.00E+00	1.03E+00
Well Fugitives	VOL82	0.00E+00	0.00E+00	0.00E+00	0.00E+00	0.00E+00	0.00E+00	0.00E+00	0.00E+00	0.00E+00	0.00E+00	0.00E+00	0.00E+00	0.00E+00	0.00E+00	1.03E+00
Well Fugitives	VOL83	0.00E+00	0.00E+00	0.00E+00	0.00E+00	0.00E+00	0.00E+00	0.00E+00	0.00E+00	0.00E+00	0.00E+00	0.00E+00	0.00E+00	0.00E+00	0.00E+00	1.03E+00
Well Fugitives	VOL84	0.00E+00	0.00E+00	0.00E+00	0.00E+00	0.00E+00	0.00E+00	0.00E+00	0.00E+00	0.00E+00	0.00E+00	0.00E+00	0.00E+00	0.00E+00	0.00E+00	1.03E+00
Well Fugitives	VOL85	0.00E+00	0.00E+00	0.00E+00	0.00E+00	0.00E+00	0.00E+00	0.00E+00	0.00E+00	0.00E+00	0.00E+00	0.00E+00	0.00E+00	0.00E+00	0.00E+00	1.03E+00
Well Fugitives	VOL86	0.00E+00	0.00E+00	0.00E+00	0.00E+00	0.00E+00	0.00E+00	0.00E+00	0.00E+00	0.00E+00	0.00E+00	0.00E+00	0.00E+00	0.00E+00	0.00E+00	1.03E+00
Well Fugitives	VOL87	0.00E+00	0.00E+00	0.00E+00	0.00E+00	0.00E+00	0.00E+00	0.00E+00	0.00E+00	0.00E+00	0.00E+00	0.00E+00	0.00E+00	0.00E+00	0.00E+00	1.03E+00
Well Fugitives	VOL88	0.00E+00	0.00E+00	0.00E+00	0.00E+00	0.00E+00	0.00E+00	0.00E+00	0.00E+00	0.00E+00	0.00E+00	0.00E+00	0.00E+00	0.00E+00	0.00E+00	1.03E+00
Well Fugitives	VOL89	0.00E+00	0.00E+00	0.00E+00	0.00E+00	0.00E+00	0.00E+00	0.00E+00	0.00E+00	0.00E+00	0.00E+00	0.00E+00	0.00E+00	0.00E+00	0.00E+00	1.03E+00
OCP-CPF Phase 2 Oil Fugitives - 3	VOL9	3.84E+00	0.00E+00	0.00E+00	0.00E+00	0.00E+00	0.00E+00	0.00E+00	0.00E+00	0.00E+00	0.00E+00	0.00E+00	0.00E+00	0.00E+00	0.00E+00	2.40E-04
Well Fugitives	VOL90	0.00E+00	0.00E+00	0.00E+00	0.00E+00	0.00E+00	0.00E+00	0.00E+00	0.00E+00	0.00E+00	0.00E+00	0.00E+00	0.00E+00	0.00E+00	0.00E+00	1.03E+00
Well Fugitives	VOL91	0.00E+00	0.00E+00	0.00E+00	0.00E+00	0.00E+00	0.00E+00	0.00E+00	0.00E+00	0.00E+00	0.00E+00	0.00E+00	0.00E+00	0.00E+00	0.00E+00	1.03E+00
Well Fugitives	VOL92	0.00E+00	0.00E+00	0.00E+00	0.00E+00	0.00E+00	0.00E+00	0.00E+00	0.00E+00	0.00E+00	0.00E+00	0.00E+00	0.00E+00	0.00E+00	0.00E+00	1.03E+00
Well Fugitives	VOL93	0.00E+00	0.00E+00	0.00E+00	0.00E+00	0.00E+00	0.00E+00	0.00E+00	0.00E+00	0.00E+00	0.00E+00	0.00E+00	0.00E+00	0.00E+00	0.00E+00	1.03E+00
Well Fugitives	VOL94	0.00E+00	0.00E+00	0.00E+00	0.00E+00	0.00E+00	0.00E+00	0.00E+00	0.00E+00	0.00E+00	0.00E+00	0.00E+00	0.00E+00	0.00E+00	0.00E+00	1.03E+00
Well Fugitives	VOL95	0.00E+00	0.00E+00	0.00E+00	0.00E+00	0.00E+00	0.00E+00	0.00E+00	0.00E+00	0.00E+00	0.00E+00	0.00E+00	0.00E+00	0.00E+00	0.00E+00	1.03E+00
Well Fugitives	VOL96	0.00E+00	0.00E+00	0.00E+00	0.00E+00	0.00E+00	0.00E+00	0.00E+00	0.00E+00	0.00E+00	0.00E+00	0.00E+00	0.00E+00	0.00E+00	0.00E+00	1.03E+00
Well Fugitives	VOL97	0.00E+00	0.00E+00	0.00E+00	0.00E+00	0.00E+00	0.00E+00	0.00E+00	0.00E+00	0.00E+00	0.00E+00	0.00E+00	0.00E+00	0.00E+00	0.00E+00	1.03E+00
Well Fugitives	VOL98	0.00E+00	0.00E+00	0.00E+00	0.00E+00	0.00E+00	0.00E+00	0.00E+00	0.00E+00	0.00E+00	0.00E+00	0.00E+00	0.00E+00	0.00E+00	0.00E+00	1.03E+00
Well Fugitives	VOL99	0.00E+00	0.00E+00	0.00E+00	0.00E+00	0.00E+00	0.00E+00	0.00E+00	0.00E+00	0.00E+00	0.00E+00	0.00E+00	0.00E+00	0.00E+00	0.00E+00	1.03E+00

TABLE C-3: Project Sources' Locations and Parameters

Parameters	Units	Description
Type		POINT, AREA, AREA_CIRC, AREA_POLY, VOLUME, OPEN_PIT, LINE, LINE_VOLUME, LINE_AREA
ID		Source ID up to 12 characters
Desc		Optional description
SourceID_Prefix		Text prefix up to 4 characters long for generated LINE_VOLUME and LINE_AREA sources
Base_Elev	[m]	Source base elevation above mean sea level
Height	[m]	Release height above ground
Diam	[m]	Inner stack diameter (POINT) or circular area radius (AREA_CIRC) / Plume width for LINE_VOLUME source
Exit_Vel	[m/s]	Exit velocity (POINT only)
Exit_Temp	[K]	Exit temperature (POINT only)
Release Type		VERTICAL, HORIZONTAL, CAPPED (POINT only) - HORIZONTAL and CAPPED are non-default beta options / LINE_VOLUME configuration: Separated, Adjacent or Separated2W
SigmaY	[m]	Initial sigma Y (VOLUME only)
SigmaZ	[m]	Initial sigma Z (AREA, AREA_CIRC, AREA_POLY, VOLUME, LINE, and LINE_AREA only; optional for AREA, AREA_CIRC, AREA_POLY, and LINE)
Length_X	[m]	Side length (VOLUME Sources)
X1…n	[m]	X coordinate of source location [m]
Y1…n	[m]	Y coordinate of source location [m]
Base_Elev_m	[m]	Base Elevation for LINE_VOLUME, LINE_AREA Nodes
Rel_Height_m	[m]	Release height for LINE_VOLUME, LINE_AREA Nodes

Type	ID	Desc	Base_Elev	Height	Diam	Exit_Vel	Exit_Temp	Release_Type	SigmaY	SigmaZ	Length_X	X1	Y1
			[m]	[m]	[m]	[m/s]	[K]		[m]	[m]	[m]	[m]	[m]
LINE_VOLUME	SLINE1	Truck Travel	207.96	3.6576	1.83			Separated_Elevated				748140.30	3856603.93
LINE_VOLUME	SLINE1		208.80	3.6576	1.83			Separated_Elevated				748150.79	3856646.45
LINE_VOLUME	SLINE1		209.05	3.6576	1.83			Separated_Elevated				748157.68	3856669.37
LINE_VOLUME	SLINE1		208.26	3.6576	1.83			Separated_Elevated				748176.97	3856594.49
LINE_VOLUME	SLINE1		208.72	3.6576	1.83			Separated_Elevated				748189.15	3856604.95
LINE_VOLUME	SLINE1		205.34	3.6576	1.83			Separated_Elevated				748189.61	3856564.50
LINE_VOLUME	SLINE1		208.94	3.6576	1.83			Separated_Elevated				748189.96	3856591.53
LINE_VOLUME	SLINE1		208.32	3.6576	1.83			Separated_Elevated				748195.52	3856564.50
LINE_VOLUME	SLINE1		209.95	3.6576	1.83			Separated_Elevated				748201.87	3856659.28
POINT	STCK7	62.5 MMBtu SG	313.09	6.10	1.0668	8.08	383.2	VERTICAL				748570.32	3857197.65
POINT	STCK8	85 MMBtu SG 1	313.1	6.10	1.2192	8.37	402.6	VERTICAL				748562.81	3857205.68
POINT	STCK9	85 MMBtu SG 2	313.11	6.10	1.2192	8.37	402.6	VERTICAL				748553.93	3857219.01
POINT	STCK10	85 MMBtu SG 3	313.06	6.10	1.2192	8.37	402.6	VERTICAL				748544.48	3857230.29
POINT	STCK11	85 MMBtu SG 4	313.15	6.10	1.2192	8.37	402.6	VERTICAL				748536.03	3857243.13
POINT	STCK12	85 MMBtu SG 5	313.23	6.10	1.2192	8.37	402.6	VERTICAL				748526.72	3857255.71
POINT	STCK13	85 MMBtu SG 6	313.22	6.10	1.2192	8.37	402.6	VERTICAL				748518.01	3857268.28
POINT	STCK14	Generator	211.7	10.00	0.1524	27.91	923.2	VERTICAL				747909.48	3856869.22
POINT	STCK15	Emergency Flare	315.58	10.67	1.9812	0.69	1033.2	VERTICAL				748338.75	3857412.91
POINT	STCK1	10,000 Barrel 1	208.21	7.32	0.0008	0.00	0.0	VERTICAL				748115.48	3856653.49
POINT	STCK2	10,000 Barrel 2	207.83	7.32	0.0008	0.00	0.0	VERTICAL				748108.13	3856626.18
POINT	STCK3	6,500 Barrel 1	208.02	7.32	0.0008	0.00	0.0	VERTICAL				748094.63	3856658.22
POINT	STCK4	6,500 Barrel 2	207.56	7.32	0.0008	0.00	0.0	VERTICAL				748087.55	3856629.82
POINT	STCK5	1,000 BBL Skim Tank 1	208.07	4.88	0.0008	0.00	0.0	VERTICAL				748022.07	3856684.46
POINT	STCK6	1,000 BBL Sludge Tank 1	207.56	4.88	0.0008	0.00	0.0	VERTICAL				748009.27	3856697.19
POINT	STCK16	100 Barrel 1	207.35	1.83	0.0008	0.00	0.0	VERTICAL				747990.75	3856716.04
POINT	STCK17	100 Barrel 2	216.29	1.83	0.0008	0.00	0.0	VERTICAL				748051.15	3856799.35
POINT	STCK18	1,000 BBL Skim Tank 2	208.16	4.88	0.0008	0.00	0.0	VERTICAL				748031.13	3856692.49
POINT	STCK19	1,000 BBL Sludge Tank 2	208.02	4.88	0.0008	0.00	0.0	VERTICAL				748018.46	3856706.30
VOLUME	VOL1	OCP-CPF Phase 1 Oil Fugitives - 1	216.84	1.52					4.71	0.71	20.27	748013.06	3856805.08
VOLUME	VOL23	LOS/COS Oil Fugitives	207.96	1.52					13.50	0.71	58.07	748104.61	3856641.78
VOLUME	VOL29	Phase 2 WCP Oil Fugitives - 1	216.3	1.52					4.65	0.71	20.00	748087.47	3856738.64
VOLUME	VOL33	LACT Oil Fugitives - 1	208.35	1.52					1.42	0.71	6.10	748171.84	3856661.84
VOLUME	VOL36	LACT Gas Fugitives - 1	208.35	4.57					1.42	2.13	6.10	748171.84	3856661.84
VOLUME	VOL131	Well Fugitives	261.52	0.46					10.18	0.21	43.77	747424.46	3858869.62
VOLUME	VOL53	Loading Rack 1	208.14	9.14					0.64	4.25	2.74	748171.55	3856662.66
VOLUME	VOL25	Phase 1 WCP Oil Fugitives - 1	212.13	1.52					4.65	0.71	20.00	748005.19	3856825.50
VOLUME	VOL13	SCP/CPP Oil Fugitives - 1	207.99	1.52					6.73	0.71	28.96	748017.96	3856703.97

TABLE C-3: Project Sources' Locations and Parameters

Parameters	Units	Description
Type		POINT, AREA, AREA_CIRC, AREA_POLY, VOLUME, OPEN_PIT, LINE, LINE_VOLUME, LINE_AREA
ID		Source ID up to 12 characters
Desc		Optional description
SourceID_Prefix		Text prefix up to 4 characters long for generated LINE_VOLUME and LINE_AREA sources
Base_Elev	[m]	Source base elevation above mean sea level
Height	[m]	Release height above ground
Diam	[m]	Inner stack diameter (POINT) or circular area radius (AREA_CIRC) / Plume width for LINE_VOLUME source
Exit_Vel	[m/s]	Exit velocity (POINT only)
Exit_Temp	[K]	Exit temperature (POINT only)
Release Type		VERTICAL, HORIZONTAL, CAPPED (POINT only) - HORIZONTAL and CAPPED are non-default beta options / LINE_VOLUME configuration: Separated, Adjacent or Separated2W
SigmaY	[m]	Initial sigma Y (VOLUME only)
SigmaZ	[m]	Initial sigma Z (AREA, AREA_CIRC, AREA_POLY, VOLUME, LINE, and LINE_AREA only; optional for AREA, AREA_CIRC, AREA_POLY, and LINE)
Length_X	[m]	Side length (VOLUME Sources)
X1…n	[m]	X coordinate of source location [m]
Y1…n	[m]	Y coordinate of source location [m]
Base_Elev_m	[m]	Base Elevation for LINE_VOLUME, LINE_AREA Nodes
Rel_Height_m	[m]	Release height for LINE_VOLUME, LINE_AREA Nodes

Type	ID	Desc	Base_Elev	Height	Diam	Exit_Vel	Exit_Temp	Release_Type	SigmaY	SigmaZ	Length_X	X1	Y1
			[m]	[m]	[m]	[m/s]	[K]		[m]	[m]	[m]	[m]	[m]
VOLUME	VOL18	SCP/CPP Gas Fugitives - 1	207.99	4.57					6.73	2.13	28.96	748017.96	3856703.97
VOLUME	VOL14	SCP/CPP Oil Fugitives - 2	207.03	1.52					6.73	0.71	28.96	748018.27	3856674.50
VOLUME	VOL19	SCP/CPP Gas Fugitives - 2	207.03	4.57					6.73	2.13	28.96	748018.27	3856674.50
VOLUME	VOL39	Sulfurox Gas Fugitives - 1	312.74	4.57					1.97	2.13	8.47	748460.83	3857325.62
VOLUME	VOL47	PGTP All Fugitives V-5880 P-589(	315.51	0.46					1.06	0.21	4.57	748348.23	3857403.05
VOLUME	VOL50	PGTP Fugitives V-5670 V-5660	316.85	0.46					4.25	0.21	18.29	748324.24	3857390.70
VOLUME	VOL48	PGTP and GS Fugitives FF-5030 F	316.83	0.46					4.71	0.21	20.24	748371.53	3857378.90
VOLUME	VOL132	Well Fugitives	241.4	0.46					10.18	0.21	43.77	747569.96	3858843.92
VOLUME	VOL133	Well Fugitives	259.08	0.46					10.18	0.21	43.77	747568.82	3858692.54
VOLUME	VOL97	Well Fugitives	262.13	0.46					10.18	0.21	43.77	747490.28	3858596.92
VOLUME	VOL56	Well Fugitives	246.86	0.46					10.18	0.21	43.77	747698.58	3858513.83
VOLUME	VOL57	Well Fugitives	268.22	0.46					10.18	0.21	43.77	747654.19	3858338.54
VOLUME	VOL58	Well Fugitives	289.56	0.46					10.18	0.21	43.77	747942.64	3858129.27
VOLUME	VOL59	Well Fugitives	289.56	0.46					10.18	0.21	43.77	747902.97	3858015.10
VOLUME	VOL60	Well Fugitives	298.7	0.46					10.18	0.21	43.77	747905.87	3857807.07
VOLUME	VOL61	Well Fugitives	262.13	0.46					10.18	0.21	43.77	748117.77	3858024.78
VOLUME	VOL62	Well Fugitives	288.95	0.46					10.18	0.21	43.77	748252.26	3858099.28
VOLUME	VOL63	Well Fugitives	288.95	0.46					10.18	0.21	43.77	748214.53	3857999.62
VOLUME	VOL64	Well Fugitives	276.15	0.46					10.18	0.21	43.77	748226.14	3857928.02
VOLUME	VOL65	Well Fugitives	265.79	0.46					10.18	0.21	43.77	748323.86	3858031.55
VOLUME	VOL66	Well Fugitives	289.56	0.46					10.18	0.21	43.77	748141.96	3857697.73
VOLUME	VOL67	Well Fugitives	296.27	0.46					10.18	0.21	43.77	748157.89	3857593.27
VOLUME	VOL68	Well Fugitives	318.82	0.46					10.18	0.21	43.77	748166.02	3857507.36
VOLUME	VOL69	Well Fugitives	317.42	0.46					10.18	0.21	43.77	748264.70	3857545.67
VOLUME	VOL70	Well Fugitives	326.14	0.46					10.18	0.21	43.77	748301.86	3857464.40
VOLUME	VOL71	Well Fugitives	298.7	0.46					10.18	0.21	43.77	748327.40	3857622.30
VOLUME	VOL72	Well Fugitives	308.46	0.46					10.18	0.21	43.77	748435.37	3857716.34
VOLUME	VOL73	Well Fugitives	298.7	0.46					10.18	0.21	43.77	748499.22	3857828.95
VOLUME	VOL74	Well Fugitives	298.7	0.46					10.18	0.21	43.77	748553.79	3857839.40
VOLUME	VOL75	Well Fugitives	271.88	0.46					10.18	0.21	43.77	748568.88	3858008.90
VOLUME	VOL76	Well Fugitives	271.88	0.46					10.18	0.21	43.77	748553.79	3858054.18
VOLUME	VOL77	Well Fugitives	271.88	0.46					10.18	0.21	43.77	748568.88	3858094.81
VOLUME	VOL78	Well Fugitives	246.89	0.46					10.18	0.21	43.77	748749.99	3857828.95
VOLUME	VOL79	Well Fugitives	260.91	0.46					10.18	0.21	43.77	748724.45	3857631.58
VOLUME	VOL80	Well Fugitives	298.7	0.46					10.18	0.21	43.77	748435.37	3857558.44
VOLUME	VOL81	Well Fugitives	298.7	0.46					10.18	0.21	43.77	748478.32	3857589.79
VOLUME	VOL82	Well Fugitives	295.05	0.46					10.18	0.21	43.77	748629.25	3857536.38

TABLE C-3: Project Sources' Locations and Parameters

Parameters	Units	Description
Type		POINT, AREA, AREA_CIRC, AREA_POLY, VOLUME, OPEN_PIT, LINE, LINE_VOLUME, LINE_AREA
ID		Source ID up to 12 characters
Desc		Optional description
SourceID_Prefix		Text prefix up to 4 characters long for generated LINE_VOLUME and LINE_AREA sources
Base_Elev	[m]	Source base elevation above mean sea level
Height	[m]	Release height above ground
Diam	[m]	Inner stack diameter (POINT) or circular area radius (AREA_CIRC) / Plume width for LINE_VOLUME source
Exit_Vel	[m/s]	Exit velocity (POINT only)
Exit_Temp	[K]	Exit temperature (POINT only)
Release Type		VERTICAL, HORIZONTAL, CAPPED (POINT only) - HORIZONTAL and CAPPED are non-default beta options / LINE_VOLUME configuration: Separated, Adjacent or Separated2W
SigmaY	[m]	Initial sigma Y (VOLUME only)
SigmaZ	[m]	Initial sigma Z (AREA, AREA_CIRC, AREA_POLY, VOLUME, LINE, and LINE_AREA only; optional for AREA, AREA_CIRC, AREA_POLY, and LINE)
Length_X	[m]	Side length (VOLUME Sources)
X1…n	[m]	X coordinate of source location [m]
Y1…n	[m]	Y coordinate of source location [m]
Base_Elev_m	[m]	Base Elevation for LINE_VOLUME, LINE_AREA Nodes
Rel_Height_m	[m]	Release height for LINE_VOLUME, LINE_AREA Nodes

Type	ID	Desc	Base_Elev	Height	Diam	Exit_Vel	Exit_Temp	Release_Type	SigmaY	SigmaZ	Length_X	X1	Y1
			[m]	[m]	[m]	[m/s]	[K]		[m]	[m]	[m]	[m]	[m]
VOLUME	VOL83	Well Fugitives	268.22	0.46					10.18	0.21	43.77	748867.25	3858234.13
VOLUME	VOL84	Well Fugitives	268.22	0.46					10.18	0.21	43.77	748921.82	3858258.51
VOLUME	VOL85	Well Fugitives	271.88	0.46					10.18	0.21	43.77	748883.51	3858058.82
VOLUME	VOL86	Well Fugitives	290.17	0.46					10.18	0.21	43.77	748969.42	3857854.49
VOLUME	VOL87	Well Fugitives	295.66	0.46					10.18	0.21	43.77	749011.21	3857696.60
VOLUME	VOL88	Well Fugitives	295.66	0.46					10.18	0.21	43.77	749064.62	3857711.69
VOLUME	VOL89	Well Fugitives	295.66	0.46					10.18	0.21	43.77	749121.51	3857647.84
VOLUME	VOL90	Well Fugitives	213.36	0.46					10.18	0.21	43.77	749219.47	3858208.77
VOLUME	VOL91	Well Fugitives	225.55	0.46					10.18	0.21	43.77	749352.99	3858034.62
VOLUME	VOL92	Well Fugitives	240.71	0.46					10.18	0.21	43.77	749397.11	3857750.16
VOLUME	VOL93	Well Fugitives	249.94	0.46					10.18	0.21	43.77	749333.26	3857560.91
VOLUME	VOL94	Well Fugitives	269.44	0.46					10.18	0.21	43.77	748941.98	3857452.93
VOLUME	VOL95	Well Fugitives	304.8	0.46					10.18	0.21	43.77	748265.94	3857334.34
VOLUME	VOL96	Well Fugitives	270.66	0.46					10.18	0.21	43.77	748387.85	3857199.65
VOLUME	VOL52	OCP-GS FF-1510 FF-1520 HX-108	315.89	0.46					7.23	0.21	31.10	748497.04	3857296.38
VOLUME	VOL98	Well Fugitives	265.79	0.46					10.18	0.21	43.77	748675.81	3856943.04
VOLUME	VOL99	Well Fugitives	265.79	0.46					10.18	0.21	43.77	748548.09	3856831.57
VOLUME	VOL100	Well Fugitives	306.02	0.46					10.18	0.21	43.77	748649.11	3857125.33
VOLUME	VOL101	Well Fugitives	295.66	0.46					10.18	0.21	43.77	748631.69	3857345.95
VOLUME	VOL102	Well Fugitives	301.26	0.46					10.18	0.21	43.77	748882.49	3857169.46
VOLUME	VOL103	Well Fugitives	321.62	0.46					10.18	0.21	43.77	748971.90	3857164.81
VOLUME	VOL104	Well Fugitives	277.37	0.46					10.18	0.21	43.77	749004.41	3856966.26
VOLUME	VOL105	Well Fugitives	319.52	0.46					10.18	0.21	43.77	749089.17	3857100.95
VOLUME	VOL106	Well Fugitives	321.84	0.46					10.18	0.21	43.77	749208.77	3857049.86
VOLUME	VOL107	Well Fugitives	319.66	0.46					10.18	0.21	43.77	749247.09	3857153.20
VOLUME	VOL108	Well Fugitives	298.7	0.46					10.18	0.21	43.77	749171.61	3857352.91
VOLUME	VOL109	Well Fugitives	307.85	0.46					10.18	0.21	43.77	749524.60	3857260.02
VOLUME	VOL110	Well Fugitives	291.39	0.46					10.18	0.21	43.77	749370.17	3857048.70
VOLUME	VOL111	Well Fugitives	316.99	0.46					10.18	0.21	43.77	749198.32	3856831.57
VOLUME	VOL112	Well Fugitives	313.94	0.46					10.18	0.21	43.77	749348.11	3856786.28
VOLUME	VOL113	Well Fugitives	316.99	0.46					10.18	0.21	43.77	749045.05	3856744.48
VOLUME	VOL114	Well Fugitives	316.99	0.46					10.18	0.21	43.77	749215.74	3856657.40
VOLUME	VOL115	Well Fugitives	240.79	0.46					10.18	0.21	43.77	748705.19	3856654.19
VOLUME	VOL116	Well Fugitives	321.26	0.46					10.18	0.21	43.77	749627.17	3856694.83
VOLUME	VOL117	Well Fugitives	301.75	0.46					10.18	0.21	43.77	749015.23	3856526.46
VOLUME	VOL118	Well Fugitives	301.75	0.46					10.18	0.21	43.77	748980.39	3856469.56
VOLUME	VOL119	Well Fugitives	274.32	0.46					10.18	0.21	43.77	749089.54	3856402.21

TABLE C-3: Project Sources' Locations and Parameters

Parameters	Units	Description
Type		POINT, AREA, AREA_CIRC, AREA_POLY, VOLUME, OPEN_PIT, LINE, LINE_VOLUME, LINE_AREA
ID		Source ID up to 12 characters
Desc		Optional description
SourceID_Prefix		Text prefix up to 4 characters long for generated LINE_VOLUME and LINE_AREA sources
Base_Elev	[m]	Source base elevation above mean sea level
Height	[m]	Release height above ground
Diam	[m]	Inner stack diameter (POINT) or circular area radius (AREA_CIRC) / Plume width for LINE_VOLUME source
Exit_Vel	[m/s]	Exit velocity (POINT only)
Exit_Temp	[K]	Exit temperature (POINT only)
Release Type		VERTICAL, HORIZONTAL, CAPPED (POINT only) - HORIZONTAL and CAPPED are non-default beta options / LINE_VOLUME configuration: Separated, Adjacent or Separated2W
SigmaY	[m]	Initial sigma Y (VOLUME only)
SigmaZ	[m]	Initial sigma Z (AREA, AREA_CIRC, AREA_POLY, VOLUME, LINE, and LINE_AREA only; optional for AREA, AREA_CIRC, AREA_POLY, and LINE)
Length_X	[m]	Side length (VOLUME Sources)
X1…n	[m]	X coordinate of source location [m]
Y1…n	[m]	Y coordinate of source location [m]
Base_Elev_m	[m]	Base Elevation for LINE_VOLUME, LINE_AREA Nodes
Rel_Height_m	[m]	Release height for LINE_VOLUME, LINE_AREA Nodes

Type	ID	Desc	Base_Elev	Height	Diam	Exit_Vel	Exit_Temp	Release_Type	SigmaY	SigmaZ	Length_X	X1	Y1
			[m]	[m]	[m]	[m/s]	[K]		[m]	[m]	[m]	[m]	[m]
VOLUME	VOL120	Well Fugitives	307.85	0.46					10.18	0.21	43.77	749296.24	3856464.92
VOLUME	VOL121	Well Fugitives	307.85	0.46					10.18	0.21	43.77	749530.80	3856410.34
VOLUME	VOL122	Well Fugitives	307.85	0.46					10.18	0.21	43.77	749702.65	3856357.05
VOLUME	VOL123	Well Fugitives	295.66	0.46					10.18	0.21	43.77	749552.58	3856300.79
VOLUME	VOL125	Well Fugitives	265.79	0.46					10.18	0.21	43.77	749223.33	3856131.38
VOLUME	VOL126	Well Fugitives	262.13	0.46					10.18	0.21	43.77	749127.70	3856243.41
VOLUME	VOL127	Well Fugitives	260.3	0.46					10.18	0.21	43.77	748477.29	3857040.28
VOLUME	VOL128	Well Fugitives	254.2	0.46					10.18	0.21	43.77	748784.84	3856932.24
VOLUME	VOL129	Well Fugitives	317.91	0.46					10.18	0.21	43.77	749053.06	3857169.50
VOLUME	VOL130	Well Fugitives	304.8	0.46					10.18	0.21	43.77	748549.01	3857465.27
VOLUME	VOL40	Sulfurox Gas Fugitives - 2	312.73	4.57					1.97	2.13	8.47	748468.04	3857317.05
VOLUME	VOL41	Sulfurox Gas Fugitives - 3	312.6	4.57					1.97	2.13	8.47	748469.97	3857326.10
VOLUME	VOL42	Sulfurox GasFugitives - 4	312.75	4.57					1.97	2.13	8.47	748479.02	3857321.10
VOLUME	VOL43	Sulfurox Gas Fugitives - 5	312.92	4.57					1.97	2.13	8.47	748479.02	3857330.34
VOLUME	VOL44	Sulfurox Gas Fugitives - 6	312.62	4.57					1.97	2.13	8.47	748469.77	3857334.77
VOLUME	VOL45	Sulfurox Gas Fugitives - 7	312.82	4.57					1.97	2.13	8.47	748478.63	3857339.20
VOLUME	VOL46	Sulfurox Gas Fugitives - 8	313.1	4.57					1.97	2.13	8.47	748487.69	3857321.48
VOLUME	VOL26	Phase 1 WCP Oil Fugitives - 2	217.03	1.52					4.65	0.71	20.00	748012.29	3856845.60
VOLUME	VOL2	OCP-CPF Phase 1 Oil Fugitives - 2	216.29	1.52					4.71	0.71	20.27	748033.67	3856818.81
VOLUME	VOL3	OCP-CPF Phase 1 Oil Fugitives - 3	218.35	1.52					4.71	0.71	20.27	748034.20	3856796.67
VOLUME	VOL7	OCP-CPF Phase 2 Oil Fugitives - 1	217.02	1.52					4.71	0.71	20.27	748061.70	3856765.97
VOLUME	VOL8	OCP-CPF Phase 2 Oil Fugitives - 2	216.23	1.52					4.71	0.71	20.27	748066.84	3856745.64
VOLUME	VOL9	OCP-CPF Phase 2 Oil Fugitives - 3	216.41	1.52					4.71	0.71	20.27	748082.21	3856765.84
VOLUME	VOL30	Phase 2 WCP Oil Fugitives - 2	216.29	1.52					4.65	0.71	20.00	748107.68	3856747.78
VOLUME	VOL15	SCP/CPP Oil Fugitives - 3	207.92	1.52					6.73	0.71	28.96	748047.15	3856685.20
VOLUME	VOL20	SCP/CPP Gas Fugitives - 3	207.92	4.57					6.73	2.13	28.96	748047.15	3856685.20
VOLUME	VOL34	LACT Oil Fugitives - 2	209.15	1.52					1.42	0.71	6.10	748170.62	3856644.82
VOLUME	VOL37	LACT Gas Fugitives - 2	209.15	4.57					1.42	2.13	6.10	748170.62	3856644.82
VOLUME	VOL35	LACT Oil Fugitives - 3	207.84	1.52					1.42	0.71	6.10	748178.37	3856661.97
VOLUME	VOL38	LACT Gas Fugitives - 3	207.84	4.57					1.42	2.13	6.10	748178.37	3856661.97
VOLUME	VOL55	Flare Gas Fugitives F5910	315.58	0.46					1.06	0.21	4.57	748338.89	3857413.01
VOLUME	VOL49	PGTP Fugitives P-5980 P-5990 V-	316.75	0.46					4.25	0.21	18.29	748348.35	3857384.18
VOLUME	VOL54	Loading Rack 2	209.13	9.14					0.64	4.25	2.74	748168.80	3856645.11
VOLUME	VOL124	Well Fugitives	246.89	0.46					10.18	0.21	43.77	749273.88	3855983.83
VOLUME	VOL27	Phase 1 WCP Gas Fugitives - 1	212.13	4.57					4.65	2.13	20.00	748005.07	3856825.56
VOLUME	VOL28	Phase 1 WCP Gas Fugitives - 2	217.18	4.57					4.65	2.13	20.00	748012.47	3856845.48
VOLUME	VOL4	OCP-CPF Phase 1 Gas Fugitives -	216.84	4.57					4.71	2.13	20.27	748012.94	3856805.05

TABLE C-3: Project Sources' Locations and Parameters

Parameters	Units	Description
Type		POINT, AREA, AREA_CIRC, AREA_POLY, VOLUME, OPEN_PIT, LINE, LINE_VOLUME, LINE_AREA
ID		Source ID up to 12 characters
Desc		Optional description
SourceID_Prefix		Text prefix up to 4 characters long for generated LINE_VOLUME and LINE_AREA sources
Base_Elev	[m]	Source base elevation above mean sea level
Height	[m]	Release height above ground
Diam	[m]	Inner stack diameter (POINT) or circular area radius (AREA_CIRC) / Plume width for LINE_VOLUME source
Exit_Vel	[m/s]	Exit velocity (POINT only)
Exit_Temp	[K]	Exit temperature (POINT only)
Release Type		VERTICAL, HORIZONTAL, CAPPED (POINT only) - HORIZONTAL and CAPPED are non-default beta options / LINE_VOLUME configuration: Separated, Adjacent or Separated2W
SigmaY	[m]	Initial sigma Y (VOLUME only)
SigmaZ	[m]	Initial sigma Z (AREA, AREA_CIRC, AREA_POLY, VOLUME, LINE, and LINE_AREA only; optional for AREA, AREA_CIRC, AREA_POLY, and LINE)
Length_X	[m]	Side length (VOLUME Sources)
X1…n	[m]	X coordinate of source location [m]
Y1…n	[m]	Y coordinate of source location [m]
Base_Elev_m	[m]	Base Elevation for LINE_VOLUME, LINE_AREA Nodes
Rel_Height_m	[m]	Release height for LINE_VOLUME, LINE_AREA Nodes

Type	ID	Desc	Base_Elev	Height	Diam	Exit_Vel	Exit_Temp	Release_Type	SigmaY	SigmaZ	Length_X	X1	Y1
			[m]	[m]	[m]	[m/s]	[K]		[m]	[m]	[m]	[m]	[m]
VOLUME	VOL5	OCP-CPF Phase 1 Gas Fugitives -	216.29	4.57					4.71	2.13	20.27	748033.52	3856818.78
VOLUME	VOL6	OCP-CPF Phase 1 Gas Fugitives -	218.35	4.57					4.71	2.13	20.27	748034.06	3856796.64
VOLUME	VOL10	OCP-CPF Phase 2 Gas Fugitives -	217.02	4.57					4.71	2.13	20.27	748061.55	3856765.94
VOLUME	VOL11	OCP-CPF Phase 2 Gas Fugitives -	216.41	4.57					4.71	2.13	20.27	748082.07	3856765.81
VOLUME	VOL12	OCP-CPF Phase 2 Gas Fugitives -	216.23	4.57					4.71	2.13	20.27	748066.70	3856745.61
VOLUME	VOL31	Phase 2 WCP Gas Fugitives - 1	216.3	4.57					4.65	2.13	20.00	748087.36	3856738.46
VOLUME	VOL32	Phase 2 WCP Gas Fugitives - 2	216.29	4.57					4.65	2.13	20.00	748107.58	3856747.60
VOLUME	VOL24	LOS/COS Gas Fugitives	207.96	4.57					13.50	2.13	58.07	748104.49	3856641.93
VOLUME	VOL16	SCP/CPP Oil Fugitives - 4	207.28	1.52					6.73	0.71	28.96	748054.45	3856656.39
VOLUME	VOL21	SCP/CPP Gas Fugitives - 4	207.28	4.57					6.73	2.13	28.96	748054.45	3856656.39
VOLUME	VOL17	SCP/CPP Oil Fugitives - 5	207.26	1.52					6.73	0.71	28.96	747988.77	3856707.16
VOLUME	VOL22	SCP/CPP Gas Fugitives - 5	207.26	4.57					6.73	2.13	28.96	747988.77	3856707.16
VOLUME	VOL51	PGSG Fugitives SG-6030 V-6050	313.19	0.46					1.85	0.21	7.94	748571.97	3857199.92
VOLUME	VOL134	Brine Tanks Solvent Use Toxics	207.32	0.46					3.64	0.21	15.65	748114.11	3856595.01
VOLUME	VOL135	WSP Solvent Use Toxics	207.42	0.46					7.27	0.21	31.28	747926.05	3856786.70
VOLUME	VOL136	WSP Solvent Use Toxics	207.78	0.46					7.27	0.21	31.28	747989.97	3856738.86
VOLUME	VOL137	WSP Solvent Use Toxics	207.87	0.46					7.27	0.21	31.28	747925.25	3856818.44
VOLUME	VOL138	WSP Solvent Use Toxics	207.73	0.46					7.27	0.21	31.28	747957.80	3856760.21
VOLUME	VOL139	WSP Solvent Use Toxics	207.8	0.46					7.27	0.21	31.28	747957.25	3856792.03

Toxic Emission Calculations

- Table C-4: Toxic Emissions – Steam Generators
- Table C-5: Toxic Emissions – Flare
- Table C-6: Toxic Emission Factors for Tanks, Fugitive Components, and Loading Rack
- Table C-7: H2S Emission Factors for Tanks, Fugitive Components, and Loading Rack
- Table C-8: Air Toxic Emissions for Fugitive Gas Service Components with High H2S Concentration
- Table C-9: Air Toxic Emissions for Fugitive Gas Service Components with Low H2S Concentration
- Table C-10: Air Toxic Emissions for Fugitive Oil Service Components with High H2S Concentration
- Table C-11: Air Toxic Emissions for Fugitive Oil Service Components with Low H2S Concentration
- Table C-12: Air Toxic Emissions for Tanks and Loading Rack
- Table C-13: Air Toxic Emission Factor for Solvents/Coatings Usage
- Table C-14: Air Toxic Emission Summary for Solvents/Coatings Usage
- Table C-15: Air Toxic Emission for Solvents/Coatings Usage By Modeled Source
- Table C-16: Air Toxic Emissions Factors and Emissions for Natural Gas Fired Emergency IC Engine
- Table C-17: Air Toxic Emissions for Trucks – DPM

TABLE C-4: Toxic Emissions - Steam Generators

Reference	Pollutant	CAS No.	S.G. Emission Factor (lb/MMBtu)	S.G - 85 MMBtu/hr (each) (STCK8-13) (lb/yr)	S.G - 85 MMBtu/hr (each) (STCK8-13) (lb/hr)	S.G - 62.5 MMBtu/hr (STCK7) (lb/yr)	S.G - 62.5 MMBtu/hr (STCK7) (lb/hr)
VCAPCD	PAH (w/o Naphthalene)	1151	9.52E-08	7.09E-02	8.09E-06	5.21E-02	5.95E-06
VCAPCD	Formaldehyde	50000	1.17E-05	8.71E+00	9.95E-04	6.41E+00	7.31E-04
VCAPCD	Benzene	71432	5.52E-06	4.11E+00	4.69E-04	3.02E+00	3.45E-04
VCAPCD	Acetaldehyde	75070	2.95E-06	2.20E+00	2.51E-04	1.62E+00	1.84E-04
VCAPCD	Naphthalene	91203	2.86E-07	2.13E-01	2.43E-05	1.57E-01	1.79E-05
VCAPCD	Ethylbenzene	100414	6.57E-06	4.89E+00	5.58E-04	3.60E+00	4.11E-04
VCAPCD	Acrolein	107028	2.57E-06	1.91E+00	2.18E-04	1.41E+00	1.61E-04
VCAPCD	Toluene	108883	2.52E-05	1.88E+01	2.14E-03	1.38E+01	1.58E-03
VCAPCD	n-Hexane (Hexane)	110543	4.38E-06	3.26E+00	3.72E-04	2.40E+00	2.74E-04
VCAPCD	Propylene	115071	5.05E-04	3.76E+02	4.29E-02	2.76E+02	3.16E-02
VCAPCD	Xylenes	1330207	1.88E-05	1.40E+01	1.60E-03	1.03E+01	1.18E-03
EPA AP-42	Arsenic	7440382	1.96E-07	1.46E-01	1.67E-05	1.07E-01	1.23E-05
EPA AP-42	Barium	7440393	4.31E-06	3.21E+00	3.66E-04	2.36E+00	2.69E-04
EPA AP-42	Beryllium	7440417	1.17E-08	8.71E-03	9.95E-07	6.41E-03	7.31E-07
EPA AP-42	Cadmium	7440439	1.08E-06	8.04E-01	9.18E-05	5.91E-01	6.75E-05
EPA AP-42	Chromium	7440473	1.37E-06	1.02E+00	1.16E-04	7.50E-01	8.56E-05
EPA AP-42	Cobalt	7440484	8.24E-08	6.14E-02	7.00E-06	4.51E-02	5.15E-06
EPA AP-42	Copper	7440508	8.33E-07	6.20E-01	7.08E-05	4.56E-01	5.21E-05
EPA AP-42	Manganese	7439965	3.73E-07	2.78E-01	3.17E-05	2.04E-01	2.33E-05
EPA AP-42	Mercury	7439976	2.55E-07	1.90E-01	2.17E-05	1.40E-01	1.59E-05
EPA AP-42	Nickel	7440020	2.06E-06	1.53E+00	1.75E-04	1.13E+00	1.29E-04
EPA AP-42	Selenium	7782492	2.35E-08	1.75E-02	2.00E-06	1.29E-02	1.47E-06
EPA AP-42	Vanadium	7440622	2.25E-06	1.68E+00	1.91E-04	1.23E+00	1.41E-04
EPA AP-42	Zinc	7440666	2.84E-05	2.11E+01	2.41E-03	1.55E+01	1.78E-03
EPA AP-42	Molybdenum	7439987	1.08E-06	8.04E-01	9.18E-05	5.91E-01	6.75E-05

1. VCAPCD - May 2001
2. Emission Factors From USEPA AP-42 Section 1.4 TABLE 1.4-4

TABLE C-5: Toxic Emissions - Flare

Reference	Pollutant	CAS No.	Flare Emission Factor (lb/MMcf)	Emergency Flare (STCK16) (lb/yr)	Emergency Flare (STCK16) (lb/hr)
VCAPCD	PAH (w/o Naphthalene)	1151	1.40E-02	9.60E-02	5.33E-04
VCAPCD	Formaldehyde	50000	1.17E+00	8.02E+00	4.45E-02
VCAPCD	Benzene	71432	1.59E-01	1.09E+00	6.06E-03
VCAPCD	Acetaldehyde	75070	4.30E-02	2.95E-01	1.64E-03
VCAPCD	Naphthalene	91203	1.10E-02	7.54E-02	4.19E-04
VCAPCD	Ethylbenzene	100414	1.44E+00	9.90E+00	5.50E-02
VCAPCD	Acrolein	107028	1.00E-02	6.86E-02	3.81E-04
VCAPCD	Toluene	108883	5.80E-02	3.98E-01	2.21E-03
VCAPCD	n-Hexane (Hexane)	110543	2.90E-02	1.99E-01	1.10E-03
VCAPCD	Propylene	115071	2.44E+00	1.67E+01	9.30E-02
VCAPCD	Xylenes	1330207	2.90E-02	1.99E-01	1.10E-03

1. VCAPCD - May 2001
2. Emergency Flare = 0.038095 MMcf/hr and 6.857143 MMcf/yr

TABLE C-6: Air Toxic Emissions Factors for Tanks, Fugitive Components, and Loading Rack

Carb Speciation Profiles	Pollutant	CAS No.	TOC Fraction	ROC/TOC	ROC Fraction	Has a REL or CPF?
Oil & gas production fugitives- liquid service Profile: 75	isomers of hexane		0.099	0.56	0.177	Yes (n-Hexane)
	isomers of heptane		0.116	0.56	0.207	No
	isomers of octane		0.087	0.56	0.155	No
	c7 cycloparaffins		0.016	0.56	0.029	No
	c8 cycloparaffins		0.006	0.56	0.011	No
	isomers of pentane		0.056	0.56	0.100	No
	methane	74828	0.376	0.56	0.671	No
	ethane	74840	0.064	0.56	0.114	No
	propane	74986	0.101	0.56	0.180	No
	n-butane	106978	0.074	0.56	0.132	No
	isobutane	75285	0.004	0.56	0.007	No
	benzene	71432	0.001	0.56	0.002	Yes
Oil & gas production fugitives- gas service Profile: 757	isomers of hexane		0.052	0.31	0.168	Yes (n-Hexane)
	isomers of heptane		0.061	0.31	0.197	No
	isomers of octane		0.046	0.31	0.148	No
	c7 cycloparaffins		0.009	0.31	0.029	No
	c8 cycloparaffins		0.003	0.31	0.010	No
	isomers of pentane		0.021	0.31	0.068	No
	methane	74828	0.613	0.31	1.977	No
	ethane	74840	0.079	0.31	0.255	No
	propane	74986	0.07	0.31	0.226	No
	n-butane	106978	0.043	0.31	0.139	No
	isobutane	75285	0.002	0.31	0.006	No
	benzene	71432	0.001	0.31	0.003	Yes
Crude oil evaporation- vapor composite from fixed roof tanks Profiel: 297 (Also used for Loading Racks)	isomers of hexane		0.051	0.885	0.058	Yes (n-Hexane)
	isomers of heptane		0.05	0.885	0.056	No
	isomers of octane		0.004	0.885	0.005	No
	isomers of pentane		0.112	0.885	0.127	No
	methane	74828	0.088	0.885	0.099	No
	ethane	74840	0.027	0.885	0.031	No
	propane	74986	0.161	0.885	0.182	No
	n-butane	106978	0.208	0.885	0.235	No
	isobutane	75285	0.093	0.885	0.105	No
	n-pentane	109660	0.101	0.885	0.114	No
	hexane	110543	0.047	0.885	0.053	Yes
	n-heptane	142825	0.02	0.885	0.023	No
	benzene	71432	0.024	0.885	0.027	Yes
	toluene	108883	0.014	0.885	0.016	Yes

1. ROC/TOC from SBCAPCD Website http://www.sbcapcd.org/eng/tech/frog_01.htm
2. REL and CPF from OEHHA Website http://www.oehha.ca.gov/air/hot_spots/index.html

TABLE C-7: H2S Emissions Factors for Tanks, Fugutive Components, and Loading Rack

Category	Pollutant	CAS No.	TOC Fraction	ROC/TOC	ROC Fraction	Has a REL or CPF?
Liquid Service - Fugitives (High H2S)	Hydrogen Sulfide	7783064	0.077	0.56	0.138	Yes
Gas Service - Fugitives (High H2S)	Hydrogen Sulfide	7783064	0.077	0.31	0.249	Yes
Liquid Service - Fugitives (Low H2S)	Hydrogen Sulfide	7783064	0.0000154	0.56	2.75E-05	Yes
Gas Service - Fugitives (Low H2S)	Hydrogen Sulfide	7783064	0.0000232	0.31	7.48E-05	Yes
Tanks and Loading Racks	Hydrogen Sulfide	7783064	0.0000154	0.308	5.00E-05	Yes

1. Because of a lack of a Gas Analysis, a theoretical worst case TOC and ROC fractions of High H2S concentrated liquid and gas services were calculated as follows:

Highest Theoretical H2S Concentration: 50,000 ppmv

Gas Properties		
MW_{H2S}=	34.076	g/mol
T =	288.7	K
P =	1	atm
R =	8.206E-05	$atm*m^3/(mol*K)$
Assumed ρ_{gas} =	0.931	kg/m^3

Equation: Wt Fraction = $((PV/RT)*MW)/\rho_{gas}$

Wt Fraction = 0.0772486

SBCAPCD Factors:

Liquid Components ROC/TOC = 0.56

Gas Components ROC/TOC = 0.31

TABLE C-8: Air Toxic Emissions for Fugitive Gas Service Components with High H2S Concentration

Component Fugitive Source	Gas Service Components	ROC Emissions Gas Service [2] (lbs/hr)	ROC Emissions Gas Service[1] (lbs/yr)	Benzene (lbs/yr)	Benzene (lbs/hr)	Hexane (lbs/yr)	Hexane (lbs/hr)	Hydrogen Sulfide (lbs/yr)	Hydrogen Sulfide (lbs/hr)
PGTP and GS Gas Fugitives FF5030 FF5020 V1210 V1010 V5010 (VOL48)	507	0.0665	582.86	1.88E+00	2.15E-04	9.78E+01	1.12E-02	1.45E+02	1.66E-02
PGTP Gas Fugitives P5980 P5990 V5970 V5040 (VOL49)	127	0.0161	140.94	4.55E-01	5.19E-05	2.36E+01	2.70E-03	3.51E+01	4.01E-03
PGTP Gas Fugitives V5660 V5670 (VOL50)	220	0.0288	252.19	8.14E-01	9.29E-05	4.23E+01	4.83E-03	6.28E+01	7.17E-03
Sulferox (VOL39-46)	527	0.0610	534.70	1.72E+00	1.97E-04	8.97E+01	1.02E-02	1.33E+02	1.52E-02
Total Sour Gas Fugitive Leaks	1,381	0.1725	1,510.69	4.87E+00	5.56E-04	2.53E+02	2.89E-02	3.76E+02	4.30E-02

TABLE C-9: Air Toxic Emissions for Fugitive Gas Service Components with Low H2S Concentration

Component Fugitive Source	Gas Service Components	ROC Emissions Gas Service [2] (lbs/hr)	ROC Emissions Gas Service[1] (lbs/yr)	Benzene (lbs/yr)	Benzene (lbs/hr)	Hexane (lbs/yr)	Hexane (lbs/hr)	Hydrogen Sulfide (lbs/yr)	Hydrogen Sulfide (lbs/hr)
Flare Gas Fugitives F5910 (VOL55)	24	0.0031	27.43	8.85E-02	1.01E-05	4.60E+00	5.25E-04	2.05E-03	2.34E-07
LACT Gas Fugitives 1 (VOL36)	48	0.0063	54.86	1.77E-01	2.02E-05	9.20E+00	1.05E-03	4.11E-03	4.68E-07
LACT Gas Fugitives 2 (VOL37)	24	0.0031	27.43	8.85E-02	1.01E-05	4.60E+00	5.25E-04	2.05E-03	2.34E-07
LACT Gas Fugitives 3 (VOL38)	0	0.0000	0.00	0.00E+00	0.00E+00	0.00E+00	0.00E+00	0.00E+00	0.00E+00
LOS/COS Gas Fugitives (VOL24)	100	0.0793	694.65	2.24E+00	2.56E-04	1.17E+02	1.33E-02	5.20E-02	5.93E-06
OCP-CPF Phase 1 Gas Fugitives (VOL4-6)	489	0.0652	570.82	1.84E+00	2.10E-04	9.58E+01	1.09E-02	4.27E-02	4.88E-06
OCP-CPF Phase 2 Gas Fugitives (VOL10-12)	427	0.0566	495.51	1.60E+00	1.82E-04	8.31E+01	9.49E-03	3.71E-02	4.23E-06
OCP-GS Gas Fugitives (VOL52)	774	0.1079	944.89	3.05E+00	3.48E-04	1.58E+02	1.81E-02	7.07E-02	8.07E-06
PGSG Gas Fugitives SG6030 V6050 (VOL51)	141	0.0190	166.10	5.36E-01	6.12E-05	2.79E+01	3.18E-03	1.24E-02	1.42E-06
PGTP Gas Fugitives V5880 P5890 P5900 (VOL47)	91	0.0116	101.84	3.29E-01	3.75E-05	1.71E+01	1.95E-03	7.62E-03	8.70E-07
PGTP Gas Fugitives P5980 P5990 V5970 V5040 (VOL49)	91	0.0116	101.84	3.29E-01	3.75E-05	1.71E+01	1.95E-03	7.62E-03	8.70E-07
WCP Gas Fugitives Phase 1 (Vol27-28)	121	0.0315	276.00	8.90E-01	1.02E-04	4.63E+01	5.29E-03	2.07E-02	2.36E-06
WCP Gas Fugitives Phase 2 (Vol31-32)	121	0.0315	276.00	8.90E-01	1.02E-04	4.63E+01	5.29E-03	2.07E-02	2.36E-06
SCP/CPP Gas Fugitives (VOL18-22)	1,048	0.1765	1546.44	4.99E+00	5.69E-04	2.59E+02	2.96E-02	1.16E-01	1.32E-05
Total Sweet Gas Fugitive Leaks	3,499	0.6032	5,283.81	1.70E+01	1.95E-03	8.86E+02	1.01E-01	3.95E-01	4.51E-05

TABLE C-10: Air Toxic Emissions for Fugitive Oil Service Components with High H2S Concentration

Component Fugitive Source	Oil Service Components	ROC Emissions Oil Service[2] (lbs/hr)	ROC Emissions Oil Service[1] (lbs/yr)	Benzene (lbs/yr)	Benzene (lbs/hr)	Hexane (lbs/yr)	Hexane (lbs/hr)	Hydrogen Sulfide (lbs/yr)	Hydrogen Sulfide (lbs/hr)
PGTP and GS Gas Fugitives FF5030 FF5020 V1210 V1010 V5010 (VOL48)	196	0.001	8.20	1.46E-02	1.68E-06	1.45E+00	1.66E-04	1.13E+00	1.30E-04
Wells Oil Fugitives (VOL56-133)	12,383	0.067	582.64	1.04E+00	1.19E-04	1.03E+02	1.18E-02	8.04E+01	9.17E-03
Total Sour Oil Fugitive Leaks	12,579	0.067	590.84	1.06E+00	1.20E-04	1.04E+02	1.19E-02	8.15E+01	9.30E-03

TABLE C-11: Air Toxic Emissions for Fugitive Oil Service Components with Low H2S Concentration

Component Fugitive Source	Oil Service Components	ROC Emissions Oil Service[2] (lbs/hr)	ROC Emissions Oil Service[1] (lbs/yr)	Benzene (lbs/yr)	Benzene (lbs/hr)	Hexane (lbs/yr)	Hexane (lbs/hr)	Hydrogen Sulfide (lbs/yr)	Hydrogen Sulfide (lbs/hr)
LACT Oil Fugitives 1 (VOL33)	488	0.0023	20.23	3.61E-02	4.13E-06	3.58E+00	4.08E-04	5.56E-04	6.35E-08
LACT Oil Fugitives 2 (VOL34)	244	0.0012	10.12	1.81E-02	2.05E-06	1.79E+00	2.03E-04	2.78E-04	3.16E-08
LACT Oil Fugitives 3 (VOL35)	72	0.0004	3.18	5.68E-03	6.43E-07	5.62E-01	6.36E-05	8.75E-05	9.90E-09
LOS/COS Oil Fugitives (VOL23)	1172	0.0057	50.10	8.95E-02	1.02E-05	8.86E+00	1.01E-03	1.38E-03	1.57E-07
OCP-CPF Phase 1 Oil Fugitives (VOL1-3)	720	0.0035	30.28	5.41E-02	6.18E-06	5.35E+00	6.12E-04	8.33E-04	9.52E-08
OCP-CPF Phase 2 Oil Fugitives (VOL7-9)	622	0.0030	26.18	4.68E-02	5.34E-06	4.63E+00	5.29E-04	7.20E-04	8.22E-08
OCP-GS Oil Fugitives (VOL52)	464	0.0021	18.69	3.34E-02	3.80E-06	3.30E+00	3.77E-04	5.14E-04	5.86E-08
PGSG Oil Fugitives SG6030 V6050 (VOL51)	98	0.0005	4.10	7.32E-03	8.39E-07	7.25E-01	8.31E-05	1.13E-04	1.29E-08
PGTP Oil Fugitives V5880 P5890 P5900 (VOL47)	48	0.0002	2.12	3.79E-03	4.29E-07	3.75E-01	4.24E-05	5.83E-05	6.60E-09
PGTP Oil Fugitives P5980 P5990 V5970 V5040 (VOL49)	48	0.0002	2.12	3.79E-03	4.29E-07	3.75E-01	4.24E-05	5.83E-05	6.60E-09
WCP Oil Fugitives Phase 1 (Vol25-26)	728	0.0047	40.95	7.31E-02	8.36E-06	7.24E+00	8.27E-04	1.13E-03	1.29E-07
WCP Oil Fugitives Phase 2 (Vol29-30)	728	0.0047	40.95	7.31E-02	8.36E-06	7.24E+00	8.27E-04	1.13E-03	1.29E-07
SCP/CPP Oil Fugitives (VOL13-17)	2,159	0.0103	90.09	1.61E-01	1.84E-05	1.59E+01	1.82E-03	2.48E-03	2.83E-07
Total Sweet Oil Fugitive Leaks	7,591	0.0387	339.11	6.06E-01	6.91E-05	5.99E+01	6.84E-03	9.33E-03	1.06E-06

TABLE C-12: Air Toxic Emissions for Tanks and Loading Rack

Tank Fugitive Source	ROC Emissions (lbs/hr)	ROC Emissions (lbs/yr)	Benzene (lbs/yr)	Benzene (lbs/hr)	Hexane (lbs/yr)	Hexane (lbs/hr)	Hydrogen Sulfide (lbs/yr)	Hydrogen Sulfide (lbs/hr)	Toluene (lbs/yr)	Toluene (lbs/hr)
Loading Racks Total (VOL53-54)	0.481	4360	1.18E+02	1.30E-02	4.83E+02	5.32E-02	2.18E-01	2.40E-05	6.90E+01	7.61E-03
10,000 BBl Tank (each) (STCK1-2)	0.077	680	1.84E+01	2.08E-03	7.53E+01	8.49E-03	3.40E-02	3.83E-06	1.08E+01	1.21E-03
6,500 BBL Tank (Each) (STCK3-4)	0.148	1300	3.53E+01	4.02E-03	1.44E+02	1.64E-02	6.50E-02	7.42E-06	2.06E+01	2.35E-03
1,000 BBL Skim Tank (each) (STCK5 & 18)	0.017	160	4.34E+00	4.63E-04	1.77E+01	1.89E-03	8.00E-03	8.54E-07	2.53E+00	2.70E-04
100 BBL Tank (each) (STCK16-17)	0.0004	5.0	1.36E-01	1.13E-05	5.54E-01	4.61E-05	2.50E-04	2.08E-08	7.91E-02	6.59E-06
1,000 BBL Sludge Tank (each) (STCK6 & 19)	0.007	60	1.63E+00	1.81E-04	6.64E+00	7.38E-04	3.00E-03	3.33E-07	9.49E-01	1.05E-04

TABLE C-13: Air Toxic Emission Factors for Solvent/Coating Usage

Product	Usage (gallons/yr)	Xylene (concentration)	Xylene Density (lbs/gal)	Xylene Em. Factor (lbs/gal)	Ethylbenzene (concentration)	Ethylbenzene Density (lbs/gal)	Ethylbenzene Em. Factor (lbs/gal)	Epichlorohydrin (concentration)	Epichlorohydrin Density (lbs/gal)	Epichlorohydrin Em. Factor (lbs/gal)	2-Propanol (concentration)	2-Propanol Density (lbs/gal)	Propanol Em. Factor (lbs/gal)	Methanol (concentration)	Methanol Density (lbs/gal)	Methanol Em. Factor (lbs/gal)	Propylene glycol monomethyl ether (concentration)	Propylene glycol monomethyl ether Density (lbs/gal)	Propylene glycol monomethyl ether Em Fac (lbs/gal)
Amerlock 400 Resin (VOL134)	250.75	0%	0.00	0.00	0%	0	0	4.69%	9.8	0.46	0.00%	0.00	0.00	0.00%	0.00	0.00	0%	0	0
Amerlock 400 Curing Agent (VOL134)	250.75	0%	0.00	0.00	0%	0	0	0.00%	0	0.00	0.00%	0.00	0.00	0.00%	0.00	0.00	0%	0	0
Amershield Resin	384.8	6.25%	7.26	0.45	2%	7.23	0.13	0%	0	0	0.00%	0	0	0.00%	0	0	0%	0	0
Amershield Curing Agent	96.2	0.00%	0.00	0.00	0%	0	0	0%	0	0	0.00%	0	0	0.00%	0	0	0%	0	0
Hempadur 15570 Curing Agent	19.28	15%	7.26	1.09	3.75%	7.23	0.27	0.0006%	9.8	5.63E-05	0.00%	0.00E+00	0.00E+00	0.00%	0.00E+00	0.00E+00	0%	0	0
Hempadur 15570 Resin	57.84	17.5%	7.26	1.27	4.00%	7.23	0.29	1.31%	9.8	1.29E-01	0.00%	0.00E+00	0.00E+00	0.00%	0.00E+00	0.00E+00	0%	0	0
Hempadur 17369	19	3%	7.26	0.22	0	0	0	0.28%	9.8	2.76E-02	0.00%	0.00E+00	0.00E+00	0.00%	0.00E+00	0.00E+00	0%	0	0
Surftreat	945	0%	0.00	0.00	0	0	0	0.00%	0	0.00E+00	5.00%	6.70E+00	3.35E-01	2.50%	6.60E+00	1.65E-01	0%	0	0
Interseal 670 HS Part B	10.5	17.5%	7.26	1.27	0	0	0	0.00%	0	0.00E+00	0.00%	0.00E+00	0.00E+00	0.00%	0.00E+00	0.00E+00	0%	0	0
Interseal 670 HS Part A	10.5	5.5%	7.26	0.40	5.50%	7.23	0.40	1.31%	9.8	1.29E-01	0.00%	0.00E+00	0.00E+00	0.00%	0.00E+00	0.00E+00	5.50%	7.65	0.42

*Amerlock in only used in the Brine Tank area. The other solvents/coatings are divided amongst the other volume source area (excluding wells) by the modeled square footage as shown below in table J-16.

TABLE C-14: Air Toxic Emission Summary for Solvent/Coating Usage

	Solvents/Coatings (Excluding Amerlock)		Amerlock (VOL134)	
CAS No.	lbs/yr	lbs/hr	lbs/yr	lbs/hr
1330207	2.91E+02	3.32E-02	0.00E+00	0.00E+00
100414	7.48E+01	8.54E-03	0.00E+00	0.00E+00
106898	9.32E+00	1.06E-03	1.15E+02	1.31E-02
67630	3.16E+02	3.61E-02	0.00E+00	0.00E+00
67561	1.56E+02	1.78E-02	0.00E+00	0.00E+00
107982	4.42E+00	5.04E-04	0.00E+00	0.00E+00

TABLE C-15: Air Toxic Emission For Solvent/Coating Usage By Modeled Source (Excluding Amerlock)

Volume Sources with Solvent Usage	Modeled Area (m^2)	Percentage of Total Area	Ethylbenzene (lbs/yr)	Ethylbenzene (lbs/hr)	Epichlorohydrin (lbs/yr)	Epichlorohydrin (lbs/hr)	Propylene glycol monomethyl ether	Propylene glycol monomethyl ether	Xylene (lbs/yr)	Xylene (lbs/hr)	Propanol (lbs/yr)	Propanol (lbs/hr)	Methanol (lbs/yr)	Methanol (lbs/hr)
Flare Gas Fugitives F5910 (VOL55)	20.9	0.1%	5.04E-02	5.75E-06	6.27E-03	7.16E-07	2.97E-03	3.39E-07	1.96E-01	2.23E-05	2.13E-01	2.43E-05	1.05E-01	1.20E-05
LACT Oil Fugitives 1 (VOL33)	37.2	0.1%	8.96E-02	1.02E-05	1.12E-02	1.27E-06	5.29E-03	6.04E-07	3.48E-01	3.97E-05	3.79E-01	4.33E-05	1.87E-01	2.13E-05
LACT Oil Fugitives 2 (VOL34)	37.2	0.1%	8.96E-02	1.02E-05	1.12E-02	1.27E-06	5.29E-03	6.04E-07	3.48E-01	3.97E-05	3.79E-01	4.33E-05	1.87E-01	2.13E-05
LACT Oil Fugitives 3 (VOL35)	37.2	0.1%	8.96E-02	1.02E-05	1.12E-02	1.27E-06	5.29E-03	6.04E-07	3.48E-01	3.97E-05	3.79E-01	4.33E-05	1.87E-01	2.13E-05
LACT Gas Fugitives 1 (VOL36)	37.2	0.1%	8.96E-02	1.02E-05	1.12E-02	1.27E-06	5.29E-03	6.04E-07	3.48E-01	3.97E-05	3.79E-01	4.33E-05	1.87E-01	2.13E-05
LACT Gas Fugitives 2 (VOL37)	37.2	0.1%	8.96E-02	1.02E-05	1.12E-02	1.27E-06	5.29E-03	6.04E-07	3.48E-01	3.97E-05	3.79E-01	4.33E-05	1.87E-01	2.13E-05
LACT Gas Fugitives 3 (VOL38)	37.2	0.1%	8.96E-02	1.02E-05	1.12E-02	1.27E-06	5.29E-03	6.04E-07	3.48E-01	3.97E-05	3.79E-01	4.33E-05	1.87E-01	2.13E-05
LOS/COS Oil Fugitives (VOL23)	3372.1	10.9%	8.12E+00	9.27E-04	1.01E+00	1.15E-04	4.80E-01	5.48E-05	3.16E+01	3.60E-03	3.44E+01	3.92E-03	1.69E+01	1.93E-03
LOS/COS Gas Fugitives (VOL24)	3372.1	10.9%	8.12E+00	9.27E-04	1.01E+00	1.15E-04	4.80E-01	5.48E-05	3.16E+01	3.60E-03	3.44E+01	3.92E-03	1.69E+01	1.93E-03
OCP-CPF Phase 1 Oil Fugitives (VOL1-3)	1232.4	4.0%	2.97E+00	3.39E-04	3.70E-01	4.22E-05	1.75E-01	2.00E-05	1.15E+01	1.32E-03	1.26E+01	1.43E-03	6.18E+00	7.06E-04
OCP-CPF Phase 1 Gas Fugitives (VOL4-6)	1232.4	4.0%	2.97E+00	3.39E-04	3.70E-01	4.22E-05	1.75E-01	2.00E-05	1.15E+01	1.32E-03	1.26E+01	1.43E-03	6.18E+00	7.06E-04
OCP-CPF Phase 2 Oil Fugitives (VOL7-9)	1232.7	4.0%	2.97E+00	3.39E-04	3.70E-01	4.22E-05	1.75E-01	2.00E-05	1.15E+01	1.32E-03	1.26E+01	1.43E-03	6.19E+00	7.06E-04
OCP-CPF Phase 2 Gas Fugitives (VOL10-12)	1232.7	4.0%	2.97E+00	3.39E-04	3.70E-01	4.22E-05	1.75E-01	2.00E-05	1.15E+01	1.32E-03	1.26E+01	1.43E-03	6.19E+00	7.06E-04
OCP-GS Oil/Gas Fugitives (VOL52)	967.2	3.1%	2.33E+00	2.66E-04	2.90E-01	3.31E-05	1.38E-01	1.57E-05	9.05E+00	1.03E-03	9.86E+00	1.13E-03	4.85E+00	5.54E-04
PGSG Oil/Gas Fugitives SG6030 V6050 (VOL51)	20.9	0.1%	5.04E-02	5.75E-06	6.27E-03	7.16E-07	2.97E-03	3.39E-07	1.96E-01	2.23E-05	2.13E-01	2.43E-05	1.05E-01	1.20E-05
PGTP Oil/Gas Fugitives V5880 P5890 P5900 (VOL47)	20.9	0.1%	5.04E-02	5.75E-06	6.27E-03	7.16E-07	2.97E-03	3.39E-07	1.96E-01	2.23E-05	2.13E-01	2.43E-05	1.05E-01	1.20E-05
PGTP and GS Oil/Gas Fugitives FF5030 FF5020 V1210 V1010 V5010 (VOL48)	409.7	1.3%	9.87E-01	1.13E-04	1.23E-01	1.40E-05	5.83E-02	6.65E-06	3.83E+00	4.38E-04	4.17E+00	4.77E-04	2.06E+00	2.35E-04
PGTP Oil/Gas Fugitives P5980 P5990 V5970 V5040 (VOL49)	334.5	1.1%	8.06E-01	9.20E-05	1.00E-01	1.15E-05	4.76E-02	5.43E-06	3.13E+00	3.57E-04	3.41E+00	3.89E-04	1.68E+00	1.92E-04
PGTP Gas Fugitives V5660 V5670 (VOL50)	334.5	1.1%	8.06E-01	9.20E-05	1.00E-01	1.15E-05	4.76E-02	5.43E-06	3.13E+00	3.57E-04	3.41E+00	3.89E-04	1.68E+00	1.92E-04
WCP Oil Fugitives Phase 1 (Vol25-26)	800	2.6%	1.93E+00	2.20E-04	2.40E-01	2.74E-05	1.14E-01	1.30E-05	7.49E+00	8.55E-04	8.15E+00	9.31E-04	4.01E+00	4.58E-04
WCP Gas Fugitives Phase 1 (Vol27-28)	800	2.6%	1.93E+00	2.20E-04	2.40E-01	2.74E-05	1.14E-01	1.30E-05	7.49E+00	8.55E-04	8.15E+00	9.31E-04	4.01E+00	4.58E-04
WCP Oil Fugitives Phase 2 (Vol29-30)	800	2.6%	1.93E+00	2.20E-04	2.40E-01	2.74E-05	1.14E-01	1.30E-05	7.49E+00	8.55E-04	8.15E+00	9.31E-04	4.01E+00	4.58E-04
WCP Gas Fugitives Phase 2 (Vol31-32)	800	2.6%	1.93E+00	2.20E-04	2.40E-01	2.74E-05	1.14E-01	1.30E-05	7.49E+00	8.55E-04	8.15E+00	9.31E-04	4.01E+00	4.58E-04
SCP/CPP Oil Fugitives (VOL13-17)	4192	13.5%	1.01E+01	1.15E-03	1.26E+00	1.44E-04	5.96E-01	6.81E-05	3.92E+01	4.48E-03	4.27E+01	4.88E-03	2.10E+01	2.40E-03
SCP/CPP Gas Fugitives (VOL18-22)	4192	13.5%	1.01E+01	1.15E-03	1.26E+00	1.44E-04	5.96E-01	6.81E-05	3.92E+01	4.48E-03	4.27E+01	4.88E-03	2.10E+01	2.40E-03
Sulferox (VOL39-46)	573.6	1.8%	1.38E+00	1.58E-04	1.72E-01	1.96E-05	8.16E-02	9.31E-06	5.37E+00	6.13E-04	5.84E+00	6.67E-04	2.88E+00	3.29E-04
WSP Solvent Use Toxics (VOL135-139)	4892	15.8%	1.18E+01	1.35E-03	1.47E+00	1.68E-04	6.96E-01	7.94E-05	4.58E+01	5.23E-03	4.98E+01	5.69E-03	2.46E+01	2.80E-03
Total	31055.80	100%	74.819	0.009	9.316	0.001	4.418	0.001	290.594	0.033	316.434	0.036	155.853	0.018

TABLE C-16: Air Toxic Emisisons Factors and Emissions for Natural Gas Fired Emergency IC Engine

Pollutant	Cas No.	Emission Factor (lb/MMBtu)	Fuel Usage (MMBtu/hr)	Fuel Usage (MMBtu/yr)	Emissions (STCK14) (lb/yr)	Emissions (STCK14) (lb/hr)
Xylene	1330207	4.42E-05	8.56	5134.56	2.27E-01	3.78E-04
Chrysene	218019	1.66E-07	8.56	5134.56	8.54E-04	1.42E-06
Benzo(b)fluoranthene	205992	3.98E-08	8.56	5134.56	2.05E-04	3.41E-07
n-Hexane	110543	2.66E-04	8.56	5134.56	1.37E+00	2.28E-03
Phenol	108952	5.76E-06	8.56	5134.56	2.96E-02	4.93E-05
Chlorobenzene	108907	7.30E-06	8.56	5134.56	3.75E-02	6.24E-05
Toluene	108883	9.79E-05	8.56	5134.56	5.03E-01	8.38E-04
Acrolein	107028	1.23E-03	8.56	5134.56	6.33E+00	1.06E-02
1,3 - Butadiene	106990	6.41E-05	8.56	5134.56	3.29E-01	5.48E-04
Ethylene Dibromide	106934	1.06E-05	8.56	5134.56	5.46E-02	9.10E-05
Styrene	100425	5.66E-06	8.56	5134.56	2.91E-02	4.85E-05
Ethylbenzene	100414	9.53E-06	8.56	5134.56	4.89E-02	8.15E-05
Naphthalene	91203	1.79E-05	8.56	5134.56	9.17E-02	1.53E-04
1,1,2,2 - Tetrachloroethane	79345	9.60E-06	8.56	5134.56	4.93E-02	8.22E-05
1,1,2 - Trichloroethane	79005	7.63E-06	8.56	5134.56	3.92E-02	6.53E-05
1,1 - Dichloroethane	75343	5.66E-06	8.56	5134.56	2.91E-02	4.85E-05
Methylene Chloride	75092	4.80E-06	8.56	5134.56	2.46E-02	4.11E-05
Acetaldehyde	75070	2.01E-03	8.56	5134.56	1.03E+01	1.72E-02
Vinyl Chloride	75014	3.58E-06	8.56	5134.56	1.84E-02	3.06E-05
Chloroethane	75003	4.49E-07	8.56	5134.56	2.30E-03	3.84E-06
Benzene	71432	1.06E-04	8.56	5134.56	5.42E-01	9.04E-04
Chloroform	67663	6.84E-06	8.56	5134.56	3.51E-02	5.85E-05
Methanol	67561	6.00E-04	8.56	5134.56	3.08E+00	5.13E-03
Carbon Tetrachloride	56235	8.81E-06	8.56	5134.56	4.52E-02	7.54E-05
Formaldehyde	50000	1.27E-02	8.56	5134.56	6.51E+01	1.08E-01
PAH	1151	6.46E-06	8.56	5134.56	3.31E-02	5.52E-05

1. Emission Factors From USEPA AP-42 Section 3.2 TABLE 3.2-2 reduced 76% for catalytic controls.
2. Annual Fuel usage based on 600 hours/year (600 hr/yr * 8.5576 MMBtu/hr = 5,134.56 MMBtu/yr)

TABLE C-17: Air Toxic Emisisons for Trucks - DPM

3 Year Fleet Mix (2027-2029)										
Process	**Calendar Year**	**Vehicle Class**	**Model Year**	**Daily Trips**	**# Trips per Year**		**Annual miles**	**Daily Miles**	PM10 (lbs/day)	PM10 (lbs/yr)
ECC Tanker Trucks	2029	T7 Single	2027-2029	199	72635		12,651	34.66	0.0077	2.81
								Total	**0.0077**	**2.81**
	EMFAC2014								PM10	
	Source	Region	Calendar Year	Season	Vehical Class	Fuel	Model Year	Speed	(g/mile)	
	EMFAC2014	Santa Barbara County	2029	Annual Average	T7 Single	DSL	2027-2029	Aggregate	0.10077657	
Vehicle Fleet Mix Aggregate										
Process	**Calendar Year**	**Vehicle Class**	**Model Year**	**Daily Trips**	**# Trips per Year**		**Annual miles**	**Daily Miles**	PM10 (lbs/day)	PM10 (lbs/yr)
Miscellaneous Trips	2029	T7 Single	Aggregate	8	855		149	1.39	0.00	0.03
Miscellaneous Truck Deliveries	2029	T7 Single	Aggregate	10	1134		198	1.74	0.00	0.00
								Total	**0.00073**	**0.03476**
	EMFAC2014								PM10	
	Source	Region	Calendar Year	Season	Vehical Class	Fuel	Model Year	Speed	(g/mile)	
	EMFAC2014	Santa Barbara County	2029	Annual Average	T7 Single	DSL	Aggregate	Aggregate	0.10580203	
								SLINE1	PM10 (lbs/day)	PM10 (lbs/yr)
								Totals	0.0084	2.8454

HRA Structures

- Table C-18: Structure Parameters Used to Calculate Building Downwash

TABLE C-18: Structure Parameters Used to Calculate Building Downwash

AERMOD ID	Description	Elevation (m)	Tier Height (m)	Type	Circular			Rectangular					Polygonal		
					Center Point (m)		Diameter (m)	Reference Point (SW Corner) (m)		Side Lengths (m)		Rotational Angle (deg)	# of Nodes	Node Coordinates (m)	
					x	y		x	y	x	y			x	y
BLD_1	10,000 BBL Tank	208.21	7.32	Circular	748114.7	3856653.53	16.76								
BLD_2	10,000 BBL Tank	207.81	7.32	Circular	748108.63	3856624.97	16.76								
BLD_3	6,500 BBL Tank	207.97	7.32	Circular	748094.28	3856657.93	13.41								
BLD_4	6,500 BBL Tank	207.56	7.32	Circular	748087.71	3856629.33	13.41								
BLD_5	1,000 BBl Tank	208.07	4.88	Circular	748021.82	3856683.99	6.55								
BLD_6	1,000 BBL Tank	207.56	4.88	Circular	748009.34	3856696.85	6.55								
BLD_7	Oily Solids Tank	208.16	7.32	Circular	748031.26	3856692.49	6.55								
BLD_8	Oily Solids Tank	207.99	7.32	Circular	748018.82	3856705.74	6.55								
BLD_9	Water Tank	207.91	7.32	Circular	748001.96	3856727	9.07								
BLD_10	Water Tank	207.94	7.32	Circular	747989.86	3856745.23	16.76								
BLD_11	Water Tank	207.88	7.32	Circular	747967.46	3856768.14	16.76								
BLD_12	Water Tank	207.87	7.32	Circular	747952.57	3856780.35	11.79								
BLD_13	100 barrel	207.39	1.83	Rectangular				747993.73	3856714.22	6.1	1.83	136.5			
BLD_14	100 barrel	216.23	1.83	Rectangular				748054.39	3856797.63	6.1	1.83	139.9			
BLD_15	Water Tank	207.68	7.32	Circular	747930.7	3856803.29	11.79								
BLD_16	Caustic Tank	313.48	7.32	Circular	748599.91	3857168.91	4.72								
BLD_17	Caustic	313.48	3.05	Circular	748604.93	3857172.27	3.66								
BLD_18	Water Tank	216.41	7.32	Circular	747998.7	3856852.34	4.72								
BLD_19	Water	209.14	7.32	Circular	747988.83	3856833.01	11.79								
BLD_20	Water Tank	209.87	7.32	Circular	747998.88	3856822.49	11.79								
BLD_21	Heat Medium Tank	215.58	7.32	Circular	748030.21	3856775.16	4.72								
BLD_22	Heat Medium Tank	215.76	7.32	Circular	748039.24	3856766.13	4.72								
BLD_23	Water Tank	216.1	7.32	Circular	748084.84	3856732.44	11.79								
BLD_24	water Tank	216.11	7.32	Circular	748095.02	3856721.94	11.79								
BLD_25	Water Tank	216.41	7.32	Circular	748115.72	3856731.4	4.72								
BLD_26	Brine	207.51	10.67	Circular	748118.57	3856599.18	4.27								
BLD_27	Brine	207.23	10.67	Circular	748111.01	3856601.03	4.27								
BLD_28	Brine	207.46	10.67	Circular	748116.32	3856589.16	4.27								
BLD_29	Brine	207.05	10.67	Circular	748109.25	3856590.62	4.27								
BLD_30	SO2/Waste Tank	211.94	3.66	Rectangular				748497.58	3857325.27	7.36	4.42	138.5			
BLD_31	SFX Filtrate	211.75	1.83	Circular	748474.82	3857339.57	2.44								
BLD_32	SFX Storage	211.78	3.66	Circular	748461.12	3857327.8	3.66								
BLD_33	SFX Storage	211.59	3.66	Circular	748465.01	3857323.64	3.66								
BLD_34	SFX Storage	211.34	4.42	Circular	748466.2	3857316.1	3.66								
BLD_35	SFX Storage	211.54	2.29	Circular	748459.69	3857320.95	2.29								
BLD_36	SFX Storage	211.54	2.29	Circular	748462.1	3857319.21	2.29								
BLD_37	Warehouse	217.63	7.77	Rectangular				748255.19	3856672.51	30.48	12.19	258.7			
BLD_38	Shop	217.26	7.77	Rectangular				748255.13	3856641.09	18.29	12.19	256.7			
BLD_39	Office	216.63	7.32	Polygonal									22	748166.81	3856725.76
														748165.1	3856717.54
														748161.26	3856718.04
														748159.88	3856710.84
														748163.6	3856709.99
														748162.58	3856707.53
														748164.63	3856704.78
														748172.45	3856703.32
														748171.57	3856701.42
														748175.76	3856700.42
														748176.65	3856702.56
														748179.95	3856702.14
														748184.52	3856701
														748186.01	3856705.87
														748190.35	3856705.01
														748192.04	3856712.29
														748187.69	3856713.07
														748189.17	3856721.28
														748180.99	3856722.99
														748181.24	3856725.41
														748177.25	3856726.09
														748176.48	3856723.38
BLD_40	Office	217.02	7.77	Polygonal									10	748294.68	3856601.73
														748312.88	3856597.79
														748320	3856629.31
														748318.32	3856629.68
														748319.25	3856633.81
														748320.38	3856633.81
														748322.63	3856643.19
														748317.38	3856644.5
														748317.38	3856647.32
														748304.81	3856649.76
BLD_41	Office	217.65	7.77	Rectangular				748352.36	3856635.88	35.29	14.7	347.61			

HRA Receptors

- Table C-19: Receptor Locations and Elevations

TABLE C-19: Receptors Locations and Elevations

Receptor		UTMs		ELEV (m)	Receptor		UTMs		ELEV (m)	Receptor		UTMs		ELEV (m)
#	Type	X (m)	Y (m)		#	Type	X (m)	Y (m)		#	Type	X (m)	Y (m)	
1	Property Boundary	749760.91	3858986.51	251	46	Property Boundary	749045.42	3859492.82	196.47	91	Property Boundary	750608.8327	3858131.172	224.53
2	Property Boundary	750591.46	3859007.03	240.94	47	Property Boundary	749035.97	3859534.74	195.57	92	Property Boundary	750609.7979	3858082.513	224.92
3	Property Boundary	750623.31	3857401.29	284.72	48	Property Boundary	749020.97	3859622.01	186.57	93	Property Boundary	750610.763	3858033.854	223.35
4	Property Boundary	750220.95	3857395.51	265.38	49	Property Boundary	748988.77	3859627.55	182.58	94	Property Boundary	750611.7282	3857985.195	227.82
5	Property Boundary	750232.22	3856602.03	270.69	50	Property Boundary	748991.86	3859642.34	182.27	95	Property Boundary	750612.6933	3857936.537	230.96
6	Property Boundary	749820.9	3856598.53	299.63	51	Property Boundary	749014.76	3859637.83	184.8	96	Property Boundary	750613.6585	3857887.878	233.05
7	Property Boundary	749819.12	3856194.32	293.93	52	Property Boundary	748995.91	3859678	180.69	97	Property Boundary	750614.6236	3857839.219	239.01
8	Property Boundary	749426.68	3856188.55	254.16	53	Property Boundary	748997.82	3859713.92	178.94	98	Property Boundary	750615.5888	3857790.56	241.66
9	Property Boundary	749428.44	3856057.4	246.24	54	Property Boundary	748988.37	3859773.62	175.25	99	Property Boundary	750616.5539	3857741.902	245.56
10	Property Boundary	749354	3855788.15	221.88	55	Property Boundary	748947.95	3859773.25	174.25	100	Property Boundary	750617.5191	3857693.243	249.95
11	Property Boundary	749031.37	3855783.81	203.52	56	Property Boundary	748936.86	3860177.27	169.96	101	Property Boundary	750618.4842	3857644.584	260.35
12	Property Boundary	749015.15	3855796.6	203.57	57	Property Boundary	749728.86	3860201.31	175.39	102	Property Boundary	750619.4494	3857595.925	272.4
13	Property Boundary	748997.6	3855793.35	203.61	58	Property Boundary	749809.7659	3858987.717	256.15	103	Property Boundary	750620.4145	3857547.266	277.62
14	Property Boundary	748939.13	3855801.37	211.13	59	Property Boundary	749858.6218	3858988.924	256.72	104	Property Boundary	750621.3797	3857498.608	282.88
15	Property Boundary	748949.14	3855877.99	222.02	60	Property Boundary	749907.4776	3858990.131	257.41	105	Property Boundary	750622.3448	3857449.949	280.85
16	Property Boundary	749027.54	3856027.88	235.34	61	Property Boundary	749956.3335	3858991.338	256.62	106	Property Boundary	750578.6033	3857400.648	274.89
17	Property Boundary	749026.04	3856182.46	247.5	62	Property Boundary	750005.1894	3858992.545	249.33	107	Property Boundary	750533.8967	3857400.006	268.24
18	Property Boundary	748616.42	3856174.71	207.1	63	Property Boundary	750054.0453	3858993.752	229.36	108	Property Boundary	750489.19	3857399.363	270.92
19	Property Boundary	748612.68	3856571.18	231.85	64	Property Boundary	750102.9012	3858994.959	210.47	109	Property Boundary	750444.4833	3857398.721	284.52
20	Property Boundary	747931.81	3856559.64	192.15	65	Property Boundary	750151.7571	3858996.166	195.17	110	Property Boundary	750399.7767	3857398.079	293.5
21	Property Boundary	747929.02	3856707.17	201.34	66	Property Boundary	750200.6129	3858997.374	195.07	111	Property Boundary	750355.07	3857397.437	292.57
22	Property Boundary	747794.18	3856705.63	194.43	67	Property Boundary	750249.4688	3858998.581	207.76	112	Property Boundary	750310.3633	3857396.794	285.59
23	Property Boundary	747782.93	3857351.87	233.36	68	Property Boundary	750298.3247	3858999.788	229.33	113	Property Boundary	750265.6567	3857396.152	275.86
24	Property Boundary	747358.42	3857357.73	194.54	69	Property Boundary	750347.1806	3859000.995	243.43	114	Property Boundary	750221.6544	3857345.918	260.31
25	Property Boundary	747336.08	3858950.29	224.75	70	Property Boundary	750396.0365	3859002.202	240.96	115	Property Boundary	750222.3588	3857296.325	264.4
26	Property Boundary	749344.73	3858977.45	236.21	71	Property Boundary	750444.8924	3859003.409	238.1	116	Property Boundary	750223.0631	3857246.733	265.06
27	Property Boundary	749343.68	3859033.83	240.86	72	Property Boundary	750493.7482	3859004.616	247.1	117	Property Boundary	750223.7675	3857197.14	278.33
28	Property Boundary	749311.05	3859079.85	245.46	73	Property Boundary	750542.6041	3859005.823	247.1	118	Property Boundary	750224.4719	3857147.548	288.66
29	Property Boundary	749248.54	3859076.21	229.63	74	Property Boundary	750592.4252	3858958.371	244.24	119	Property Boundary	750225.1763	3857097.955	288.06
30	Property Boundary	749248.31	3859107.59	232.11	75	Property Boundary	750593.3903	3858909.712	247.66	120	Property Boundary	750225.8806	3857048.363	282
31	Property Boundary	749289.34	3859107.66	244.8	76	Property Boundary	750594.3555	3858861.054	255.64	121	Property Boundary	750226.585	3856998.77	273.09
32	Property Boundary	749262.77	3859151.17	241.38	77	Property Boundary	750595.3206	3858812.395	257.9	122	Property Boundary	750227.2894	3856949.178	284.2
33	Property Boundary	749261.93	3859172.05	240.95	78	Property Boundary	750596.2858	3858763.736	259.93	123	Property Boundary	750227.9938	3856899.585	303.5
34	Property Boundary	749272.2	3859191.39	241.52	79	Property Boundary	750597.2509	3858715.077	263.04	124	Property Boundary	750228.6981	3856849.993	314.11
35	Property Boundary	749281.36	3859196.94	241.51	80	Property Boundary	750598.2161	3858666.418	262.38	125	Property Boundary	750229.4025	3856800.4	302.58
36	Property Boundary	749272.32	3859197.69	241.31	81	Property Boundary	750599.1812	3858617.76	256.11	126	Property Boundary	750230.1069	3856750.808	292.1
37	Property Boundary	749272.2	3859227.62	239.82	82	Property Boundary	750600.1464	3858569.101	257.98	127	Property Boundary	750230.8113	3856701.215	280.92
38	Property Boundary	749314.51	3859229.51	240.58	83	Property Boundary	750601.1115	3858520.442	248.91	128	Property Boundary	750231.5156	3856651.623	275.09
39	Property Boundary	749324.07	3859336.34	235.13	84	Property Boundary	750602.0767	3858471.783	232.83	129	Property Boundary	750186.5178	3856601.641	264.86
40	Property Boundary	749323.49	3859372.11	233.54	85	Property Boundary	750603.0418	3858423.125	223.61	130	Property Boundary	750140.8156	3856601.252	264.1
41	Property Boundary	749289.34	3859427.05	226.37	86	Property Boundary	750604.007	3858374.466	220.4	131	Property Boundary	750095.1133	3856600.863	264.45
42	Property Boundary	749228.14	3859455.17	219.19	87	Property Boundary	750604.9721	3858325.807	218.09	132	Property Boundary	750049.4111	3856600.474	265.67
43	Property Boundary	749185.46	3859486.14	220.02	88	Property Boundary	750605.9373	3858277.148	216.23	133	Property Boundary	750003.7089	3856600.086	270.16
44	Property Boundary	749146.69	3859498.49	213.9	89	Property Boundary	750606.9024	3858228.489	215.43	134	Property Boundary	749958.0067	3856599.697	283.1
45	Property Boundary	749074.45	3859478.41	199.2	90	Property Boundary	750607.8676	3858179.831	217.56	135	Property Boundary	749912.3044	3856599.308	297.06

TABLE C-19: Receptors Locations and Elevations

Receptor		UTMs		ELEV (m)	Receptor		UTMs		ELEV (m)	Receptor		UTMs		ELEV (m)
#	Type	X (m)	Y (m)		#	Type	X (m)	Y (m)		#	Type	X (m)	Y (m)	
136	Property Boundary	749866.6022	3856598.919	302.89	181	Property Boundary	748615.9525	3856224.269	207.37	226	Property Boundary	747357.0238	3857457.265	206.31
137	Property Boundary	749820.7022	3856553.618	312.67	182	Property Boundary	748615.485	3856273.828	212.93	227	Property Boundary	747356.3256	3857507.033	218.55
138	Property Boundary	749820.5044	3856508.706	325.97	183	Property Boundary	748615.0175	3856323.386	222.87	228	Property Boundary	747355.6275	3857556.8	227.92
139	Property Boundary	749820.3067	3856463.793	336.09	184	Property Boundary	748614.55	3856372.945	232.09	229	Property Boundary	747354.9294	3857606.568	217.61
140	Property Boundary	749820.1089	3856418.881	341.92	185	Property Boundary	748614.0825	3856422.504	236.01	230	Property Boundary	747354.2313	3857656.335	208.24
141	Property Boundary	749819.9111	3856373.969	332.91	186	Property Boundary	748613.615	3856472.063	233.98	231	Property Boundary	747353.5331	3857706.103	223.88
142	Property Boundary	749819.7133	3856329.057	320.3	187	Property Boundary	748613.1475	3856521.621	232.32	232	Property Boundary	747352.835	3857755.87	236.07
143	Property Boundary	749819.5156	3856284.144	310.72	188	Property Boundary	748564.0464	3856570.356	226.37	233	Property Boundary	747352.1369	3857805.638	239.74
144	Property Boundary	749819.3178	3856239.232	302.94	189	Property Boundary	748515.4129	3856569.531	220.37	234	Property Boundary	747351.4388	3857855.405	237.53
145	Property Boundary	749770.065	3856193.599	292.29	190	Property Boundary	748466.7793	3856568.707	218.78	235	Property Boundary	747350.7406	3857905.173	229.41
146	Property Boundary	749721.01	3856192.878	280.24	191	Property Boundary	748418.1457	3856567.883	220.04	236	Property Boundary	747350.0425	3857954.94	221.72
147	Property Boundary	749671.955	3856192.156	272.49	192	Property Boundary	748369.5121	3856567.059	218.36	237	Property Boundary	747349.3444	3858004.708	211.82
148	Property Boundary	749622.9	3856191.435	269.07	193	Property Boundary	748320.8786	3856566.234	217.36	238	Property Boundary	747348.6463	3858054.475	206.23
149	Property Boundary	749573.845	3856190.714	272.68	194	Property Boundary	748272.245	3856565.41	220.4	239	Property Boundary	747347.9481	3858104.243	207.49
150	Property Boundary	749524.79	3856189.993	282.08	195	Property Boundary	748223.6114	3856564.586	218.45	240	Property Boundary	747347.25	3858154.01	221.24
151	Property Boundary	749475.735	3856189.271	267.98	196	Property Boundary	748174.9779	3856563.761	209.46	241	Property Boundary	747346.5519	3858203.778	231.92
152	Property Boundary	749427.2667	3856144.833	251.51	197	Property Boundary	748126.3443	3856562.937	202.55	242	Property Boundary	747345.8538	3858253.545	242.47
153	Property Boundary	749427.8533	3856101.117	247.96	198	Property Boundary	748077.7107	3856562.113	197.95	243	Property Boundary	747345.1556	3858303.313	245.54
154	Property Boundary	749416.0333	3856012.525	239.43	199	Property Boundary	748029.0771	3856561.289	194.77	244	Property Boundary	747344.4575	3858353.08	243.07
155	Property Boundary	749403.6267	3855967.65	236.43	200	Property Boundary	747980.4436	3856560.464	193.49	245	Property Boundary	747343.7594	3858402.848	226.91
156	Property Boundary	749391.22	3855922.775	235.19	201	Property Boundary	747930.88	3856608.817	193.62	246	Property Boundary	747343.0613	3858452.615	223.64
157	Property Boundary	749378.8133	3855877.9	231.72	202	Property Boundary	747929.95	3856657.993	197.06	247	Property Boundary	747342.3631	3858502.383	234.1
158	Property Boundary	749366.4067	3855833.025	231.29	203	Property Boundary	747884.0733	3856706.657	199.63	248	Property Boundary	747341.665	3858552.15	245.78
159	Property Boundary	749307.91	3855787.53	217.83	204	Property Boundary	747839.1267	3856706.143	197.28	249	Property Boundary	747340.9669	3858601.918	263.71
160	Property Boundary	749261.82	3855786.91	220.67	205	Property Boundary	747793.3146	3856755.341	197.47	250	Property Boundary	747340.2688	3858651.685	268.47
161	Property Boundary	749215.73	3855786.29	215.95	206	Property Boundary	747792.4492	3856805.052	200.38	251	Property Boundary	747339.5706	3858701.453	263.74
162	Property Boundary	749169.64	3855785.67	206.25	207	Property Boundary	747791.5838	3856854.762	201.96	252	Property Boundary	747338.8725	3858751.22	252.52
163	Property Boundary	749123.55	3855785.05	205.72	208	Property Boundary	747790.7185	3856904.473	203.73	253	Property Boundary	747338.1744	3858800.988	239.28
164	Property Boundary	749077.46	3855784.43	204.65	209	Property Boundary	747789.8531	3856954.184	204.41	254	Property Boundary	747337.4763	3858850.755	238.27
165	Property Boundary	748968.365	3855797.36	207.69	210	Property Boundary	747788.9877	3857003.895	207.28	255	Property Boundary	747336.7781	3858900.523	234.08
166	Property Boundary	748944.135	3855839.68	220.78	211	Property Boundary	747788.1223	3857053.605	213.72	256	Property Boundary	747385.0715	3858950.952	241.8
167	Property Boundary	748968.74	3855915.463	222.79	212	Property Boundary	747787.2569	3857103.316	221.67	257	Property Boundary	747434.0629	3858951.615	248.84
168	Property Boundary	748988.34	3855952.935	225.3	213	Property Boundary	747786.3915	3857153.027	233.8	258	Property Boundary	747483.0544	3858952.277	237.68
169	Property Boundary	749007.94	3855990.408	232.61	214	Property Boundary	747785.5262	3857202.738	252.35	259	Property Boundary	747532.0459	3858952.94	237.29
170	Property Boundary	749027.165	3856066.525	236.62	215	Property Boundary	747784.6608	3857252.448	255.24	260	Property Boundary	747581.0373	3858953.602	229.27
171	Property Boundary	749026.79	3856105.17	239.26	216	Property Boundary	747783.7954	3857302.159	244.82	261	Property Boundary	747630.0288	3858954.265	214.03
172	Property Boundary	749026.415	3856143.815	242.66	217	Property Boundary	747735.7622	3857352.521	219.73	262	Property Boundary	747679.0202	3858954.927	200.71
173	Property Boundary	748980.5267	3856181.599	246.66	218	Property Boundary	747688.5944	3857353.172	218.29	263	Property Boundary	747728.0117	3858955.59	196
174	Property Boundary	748935.0133	3856180.738	248.9	219	Property Boundary	747641.4267	3857353.823	225.61	264	Property Boundary	747777.0032	3858956.252	200.61
175	Property Boundary	748889.5	3856179.877	249.83	220	Property Boundary	747594.2589	3857354.474	242.24	265	Property Boundary	747825.9946	3858956.914	218.42
176	Property Boundary	748843.9867	3856179.016	244.03	221	Property Boundary	747547.0911	3857355.126	231.86	266	Property Boundary	747874.9861	3858957.577	232.69
177	Property Boundary	748798.4733	3856178.154	236.87	222	Property Boundary	747499.9233	3857355.777	217.66	267	Property Boundary	747923.9776	3858958.239	221.99
178	Property Boundary	748752.96	3856177.293	230.42	223	Property Boundary	747452.7556	3857356.428	206.94	268	Property Boundary	747972.969	3858958.902	204.1
179	Property Boundary	748707.4467	3856176.432	222.61	224	Property Boundary	747405.5878	3857357.079	199	269	Property Boundary	748021.9605	3858959.564	194
180	Property Boundary	748661.9333	3856175.571	214.71	225	Property Boundary	747357.7219	3857407.498	198.78	270	Property Boundary	748070.952	3858960.227	200.51

TABLE C-19: Receptors Locations and Elevations

Receptor		UTMs		ELEV (m)	Receptor		UTMs		ELEV (m)	Receptor		UTMs		ELEV (m)
#	Type	X (m)	Y (m)		#	Type	X (m)	Y (m)		#	Type	X (m)	Y (m)	
271	Property Boundary	748119.9434	3858960.889	221.95	316	Property Boundary	748986.36	3860178.773	190.31	361	Grid	750702.6815	3858442.281	240.81
272	Property Boundary	748168.9349	3858961.551	228.8	317	Property Boundary	749035.86	3860180.275	197.74	362	Grid	750704.555	3858347.826	233.27
273	Property Boundary	748217.9263	3858962.214	215.33	318	Property Boundary	749085.36	3860181.778	195.49	363	Grid	750706.4286	3858253.371	218.82
274	Property Boundary	748266.9178	3858962.876	200.98	319	Property Boundary	749134.86	3860183.28	187.99	364	Grid	750708.3021	3858158.915	217.37
275	Property Boundary	748315.9093	3858963.539	194.04	320	Property Boundary	749184.36	3860184.783	178.58	365	Grid	750710.1756	3858064.46	239.63
276	Property Boundary	748364.9007	3858964.201	195.44	321	Property Boundary	749233.86	3860186.285	167.38	366	Grid	750712.0492	3857970.005	241.13
277	Property Boundary	748413.8922	3858964.864	196.08	322	Property Boundary	749283.36	3860187.788	159.34	367	Grid	750713.9227	3857875.55	236.55
278	Property Boundary	748462.8837	3858965.526	199.1	323	Property Boundary	749332.86	3860189.29	165.66	368	Grid	750715.7962	3857781.094	242.1
279	Property Boundary	748511.8751	3858966.189	203.29	324	Property Boundary	749382.36	3860190.793	183.94	369	Grid	750717.6697	3857686.639	257.45
280	Property Boundary	748560.8666	3858966.851	208.09	325	Property Boundary	749431.86	3860192.295	187.29	370	Grid	750719.5433	3857592.184	264.96
281	Property Boundary	748609.858	3858967.513	216.61	326	Property Boundary	749481.36	3860193.798	189.52	371	Grid	750721.4168	3857497.728	260.21
282	Property Boundary	748658.8495	3858968.176	221.88	327	Property Boundary	749530.86	3860195.3	192.5	372	Grid	750723.2903	3857403.273	262.88
283	Property Boundary	748707.841	3858968.838	227.84	328	Property Boundary	749580.36	3860196.803	190.75	373	Grid	750760.5591	3859081.281	237.19
284	Property Boundary	748756.8324	3858969.501	230.69	329	Property Boundary	749629.86	3860198.305	188.07	374	Grid	750658.1089	3859179.267	200.52
285	Property Boundary	748805.8239	3858970.163	222.68	330	Property Boundary	749679.36	3860199.808	183.18	375	Grid	750793.2942	3858916.541	236.2
286	Property Boundary	748854.8154	3858970.826	217.36	331	Property Boundary	749730.142	3860152.718	168.62	376	Grid	750795.1677	3858822.086	244.38
287	Property Boundary	748903.8068	3858971.488	210.88	332	Property Boundary	749731.424	3860104.126	180.71	377	Grid	750797.0413	3858727.63	249.54
288	Property Boundary	748952.7983	3858972.15	205.17	333	Property Boundary	749732.706	3860055.534	190.33	378	Grid	750798.9148	3858633.175	264.68
289	Property Boundary	749001.7898	3858972.813	193.58	334	Property Boundary	749733.988	3860006.942	194.49	379	Grid	750800.7883	3858538.72	278.32
290	Property Boundary	749050.7812	3858973.475	192.44	335	Property Boundary	749735.27	3859958.35	196.57	380	Grid	750802.6618	3858444.264	266.48
291	Property Boundary	749099.7727	3858974.138	192.64	336	Property Boundary	749736.552	3859909.758	195.84	381	Grid	750804.5354	3858349.809	243.39
292	Property Boundary	749148.7641	3858974.8	201.78	337	Property Boundary	749737.834	3859861.166	193.51	382	Grid	750806.4089	3858255.354	232.75
293	Property Boundary	749197.7556	3858975.463	207.15	338	Property Boundary	749739.116	3859812.574	196.96	383	Grid	750808.2824	3858160.899	221
294	Property Boundary	749246.7471	3858976.125	213.25	339	Property Boundary	749740.398	3859763.982	198.12	384	Grid	750810.156	3858066.443	220.47
295	Property Boundary	749295.7385	3858976.788	225.57	340	Property Boundary	749741.68	3859715.39	195.41	385	Grid	750812.0295	3857971.988	237.21
296	Property Boundary	749344.205	3859005.64	237.17	341	Property Boundary	749742.962	3859666.798	195.83	386	Grid	750813.903	3857877.533	248.78
297	Property Boundary	749327.365	3859056.84	243.88	342	Property Boundary	749744.244	3859618.206	202.35	387	Grid	750815.7766	3857783.077	257.5
298	Property Boundary	749279.795	3859078.03	240.4	343	Property Boundary	749745.526	3859569.614	204.81	388	Grid	750817.6501	3857688.622	255.53
299	Property Boundary	749276.055	3859129.415	245.53	344	Property Boundary	749746.808	3859521.022	205.1	389	Grid	750819.5236	3857594.167	258.15
300	Property Boundary	749317.6967	3859265.12	238.48	345	Property Boundary	749748.09	3859472.43	204.87	390	Grid	750821.3971	3857499.712	267.77
301	Property Boundary	749320.8833	3859300.73	236.11	346	Property Boundary	749749.372	3859423.838	206.68	391	Grid	750823.2707	3857405.256	275.97
302	Property Boundary	749306.415	3859399.58	231.69	347	Property Boundary	749750.654	3859375.246	213.63	392	Grid	750860.5394	3859083.264	209.51
303	Property Boundary	749258.74	3859441.11	221.05	348	Property Boundary	749751.936	3859326.654	218.87	393	Grid	750727.2276	3859251.535	193.47
304	Property Boundary	749206.8	3859470.655	218.67	349	Property Boundary	749753.218	3859278.062	227.51	394	Grid	750893.2745	3858918.524	219
305	Property Boundary	749110.57	3859488.45	206.89	350	Property Boundary	749754.5	3859229.47	231.46	395	Grid	750895.1481	3858824.069	242.46
306	Property Boundary	749028.47	3859578.375	190.22	351	Property Boundary	749755.782	3859180.878	234.37	396	Grid	750897.0216	3858729.613	251.89
307	Property Boundary	748993.095	3859743.77	176.55	352	Property Boundary	749757.064	3859132.286	241.11	397	Grid	750898.8951	3858635.158	257.94
308	Property Boundary	748946.7178	3859818.141	171.17	353	Property Boundary	749758.346	3859083.694	244.88	398	Grid	750900.7686	3858540.703	277.23
309	Property Boundary	748945.4856	3859863.032	170.42	354	Property Boundary	749759.628	3859035.102	248.38	399	Grid	750902.6422	3858446.248	282.31
310	Property Boundary	748944.2533	3859907.923	171.11	355	Grid	750691.4403	3859009.013	230.06	400	Grid	750904.5157	3858351.792	259.31
311	Property Boundary	748943.0211	3859952.814	172.1	356	Grid	750693.3139	3858914.558	239.41	401	Grid	750906.3892	3858257.337	235.73
312	Property Boundary	748941.7889	3859997.706	168.55	357	Grid	750695.1874	3858820.103	252.05	402	Grid	750908.2628	3858162.882	221.48
313	Property Boundary	748940.5567	3860042.597	170.64	358	Grid	750697.0609	3858725.647	267.79	403	Grid	750910.1363	3858068.426	221.42
314	Property Boundary	748939.3244	3860087.488	170.63	359	Grid	750698.9345	3858631.192	271.32	404	Grid	750912.0098	3857973.971	235.93
315	Property Boundary	748938.0922	3860132.379	170.1	360	Grid	750700.808	3858536.737	263.35	405	Grid	750913.8834	3857879.516	259.1

TABLE C-19: Receptors Locations and Elevations

Receptor		UTMs		ELEV (m)	Receptor		UTMs		ELEV (m)	Receptor		UTMs		ELEV (m)
#	Type	X (m)	Y (m)		#	Type	X (m)	Y (m)		#	Type	X (m)	Y (m)	
406	Grid	750915.7569	3857785.061	252.29	451	Grid	751121.3381	3857505.661	292.89	496	Grid	751313.8047	3857887.448	264.03
407	Grid	750917.6304	3857690.605	248	452	Grid	751123.2117	3857411.206	291.74	497	Grid	751315.6782	3857792.993	242.65
408	Grid	750919.5039	3857596.15	257.84	453	Grid	751154.3081	3859103.27	208.3	498	Grid	751317.5518	3857698.538	245.8
409	Grid	750921.3775	3857501.695	273.03	454	Grid	751117.2742	3859187.611	219.21	499	Grid	751319.4253	3857604.082	261.66
410	Grid	750923.251	3857407.239	279.56	455	Grid	751080.2404	3859271.953	219.67	500	Grid	751321.2988	3857509.627	270.19
411	Grid	750960.5198	3859085.247	226.68	456	Grid	751043.2065	3859356.294	210.81	501	Grid	751323.1723	3857415.172	298.97
412	Grid	750898.7966	3859225.816	194.46	457	Grid	750920.2662	3859473.878	220	502	Grid	751356.0323	3859103.22	221.45
413	Grid	750796.3464	3859323.802	194.93	458	Grid	750834.3598	3859507.12	219.83	503	Grid	751285.4916	3859263.87	230.63
414	Grid	750653.1691	3859379.206	188.87	459	Grid	750748.4534	3859540.362	210.26	504	Grid	751214.9508	3859424.52	221.05
415	Grid	750993.2549	3858920.507	243.62	460	Grid	750662.547	3859573.605	195.51	505	Grid	751062.5945	3859616.83	212.69
416	Grid	750995.1284	3858826.052	253.82	461	Grid	751191.342	3859018.929	204.27	506	Grid	750898.9633	3859680.148	209.31
417	Grid	750997.0019	3858731.597	268.18	462	Grid	751193.2155	3858924.473	228.14	507	Grid	750735.332	3859743.467	206.39
418	Grid	750998.8755	3858637.141	273.52	463	Grid	751195.0891	3858830.018	233.31	508	Grid	751393.1762	3858928.44	208.16
419	Grid	751000.749	3858542.686	280.29	464	Grid	751196.9626	3858735.563	240.53	509	Grid	751395.0497	3858833.984	219.08
420	Grid	751002.6225	3858448.231	282.69	465	Grid	751198.8361	3858641.108	264.87	510	Grid	751396.9233	3858739.529	232.69
421	Grid	751004.496	3858353.775	271.01	466	Grid	751200.7097	3858546.652	266.43	511	Grid	751398.7968	3858645.074	228.18
422	Grid	751006.3696	3858259.32	245.48	467	Grid	751202.5832	3858452.197	281.42	512	Grid	751400.6703	3858550.618	227.72
423	Grid	751008.2431	3858164.865	229.9	468	Grid	751204.4567	3858357.742	282.52	513	Grid	751402.5439	3858456.163	233.23
424	Grid	751010.1166	3858070.41	238.06	469	Grid	751206.3302	3858263.286	265.03	514	Grid	751404.4174	3858361.708	244.59
425	Grid	751011.9902	3857975.954	228.23	470	Grid	751208.2038	3858168.831	245.4	515	Grid	751406.2909	3858267.253	270.51
426	Grid	751013.8637	3857881.499	231	471	Grid	751210.0773	3858074.376	245.61	516	Grid	751408.1644	3858172.797	274.67
427	Grid	751015.7372	3857787.044	239.33	472	Grid	751211.9508	3857979.92	256.9	517	Grid	751410.038	3858078.342	268.05
428	Grid	751017.6107	3857692.588	255	473	Grid	751213.8244	3857885.465	237.13	518	Grid	751411.9115	3857983.887	262.28
429	Grid	751019.4843	3857598.133	266.65	474	Grid	751215.6979	3857791.01	241.61	519	Grid	751413.785	3857889.431	281.49
430	Grid	751021.3578	3857503.678	270.1	475	Grid	751217.5714	3857696.555	265.79	520	Grid	751415.6586	3857794.976	261.4
431	Grid	751023.2313	3857409.222	266.98	476	Grid	751219.4449	3857602.099	290.79	521	Grid	751417.5321	3857700.521	246.46
432	Grid	751060.5001	3859087.23	197.96	477	Grid	751221.3185	3857507.644	287.62	522	Grid	751419.4056	3857606.066	247.11
433	Grid	750998.777	3859227.799	201.34	478	Grid	751223.192	3857413.189	294.99	523	Grid	751421.2791	3857511.61	254
434	Grid	750865.4652	3859396.07	218.18	479	Grid	751255.3172	3859102.91	222.84	524	Grid	751423.1527	3857417.155	267.71
435	Grid	750722.2878	3859451.474	193.38	480	Grid	751183.3068	3859266.907	226.97	525	Grid	751456.5637	3859103.948	230.22
436	Grid	751093.2352	3858922.49	245.05	481	Grid	751111.2965	3859430.904	219.93	526	Grid	751387.1252	3859262.088	232.27
437	Grid	751095.1087	3858828.035	249.72	482	Grid	750991.7712	3859545.222	218.07	527	Grid	751317.6867	3859420.228	225.27
438	Grid	751096.9823	3858733.58	258.67	483	Grid	750824.731	3859609.86	208.1	528	Grid	751248.2481	3859578.368	218.05
439	Grid	751098.8558	3858639.124	272.66	484	Grid	750657.6908	3859674.497	193.56	529	Grid	751132.9916	3859688.603	211.25
440	Grid	751100.7293	3858544.669	279.77	485	Grid	751293.1959	3858926.457	213.44	530	Grid	750971.9171	3859750.932	206.98
441	Grid	751102.6028	3858450.214	283.4	486	Grid	751295.0694	3858832.001	219.85	531	Grid	750810.8427	3859813.261	196.99
442	Grid	751104.4764	3858355.759	268.66	487	Grid	751296.9429	3858737.546	243.39	532	Grid	750649.7682	3859875.591	191.89
443	Grid	751106.3499	3858261.303	248.37	488	Grid	751298.8165	3858643.091	255.88	533	Grid	751493.1565	3858930.423	222.04
444	Grid	751108.2234	3858166.848	232.19	489	Grid	751300.69	3858548.635	249.6	534	Grid	751495.0301	3858835.967	207.52
445	Grid	751110.097	3858072.393	254.55	490	Grid	751302.5635	3858454.18	259.26	535	Grid	751496.9036	3858741.512	215.06
446	Grid	751111.9705	3857977.937	238.67	491	Grid	751304.437	3858359.725	281.18	536	Grid	751498.7771	3858647.057	221.13
447	Grid	751113.844	3857883.482	236.2	492	Grid	751306.3106	3858265.269	279.75	537	Grid	751500.6507	3858552.602	236.45
448	Grid	751115.7176	3857789.027	267.75	493	Grid	751308.1841	3858170.814	261.33	538	Grid	751502.5242	3858458.146	238.71
449	Grid	751117.5911	3857694.571	262.45	494	Grid	751310.0576	3858076.359	248.52	539	Grid	751504.3977	3858363.691	225.93
450	Grid	751119.4646	3857600.116	273.8	495	Grid	751311.9312	3857981.904	263.57	540	Grid	751506.2712	3858269.236	231.03

TABLE C-19: Receptors Locations and Elevations

Receptor		UTMs		ELEV (m)	Receptor		UTMs		ELEV (m)	Receptor		UTMs		ELEV (m)
#	Type	X (m)	Y (m)		#	Type	X (m)	Y (m)		#	Type	X (m)	Y (m)	
541	Grid	751508.1448	3858174.78	240.13	586	Grid	751001.7774	3859937.405	155.82	631	Grid	751798.7181	3858653.006	230.09
542	Grid	751510.0183	3858080.325	250.83	587	Grid	750914.2801	3859971.263	156.41	632	Grid	751800.5917	3858558.551	235.4
543	Grid	751511.8918	3857985.87	267.15	588	Grid	750826.7829	3860005.121	159.59	633	Grid	751802.4652	3858464.096	256.89
544	Grid	751513.7654	3857891.415	275.47	589	Grid	750739.2856	3860038.979	160.09	634	Grid	751804.3387	3858369.64	285.51
545	Grid	751515.6389	3857796.959	281.68	590	Grid	750651.7884	3860072.836	161.33	635	Grid	751806.2122	3858275.185	290.84
546	Grid	751517.5124	3857702.504	274.87	591	Grid	751691.2437	3859028.844	232.56	636	Grid	751808.0858	3858180.73	278.99
547	Grid	751519.3859	3857608.049	252.23	592	Grid	751693.1172	3858934.389	233.81	637	Grid	751809.9593	3858086.274	267.12
548	Grid	751521.2595	3857513.593	258.8	593	Grid	751694.9907	3858839.934	238.4	638	Grid	751811.8328	3857991.819	265.98
549	Grid	751523.133	3857419.138	280.08	594	Grid	751696.8643	3858745.478	228.52	639	Grid	751813.7064	3857897.364	248.62
550	Grid	751556.9727	3859104.955	233.04	595	Grid	751698.7378	3858651.023	222.62	640	Grid	751815.5799	3857802.909	244.29
551	Grid	751488.3914	3859261.143	229.07	596	Grid	751700.6113	3858556.568	240.65	641	Grid	751817.4534	3857708.453	268.91
552	Grid	751419.8102	3859417.33	219.27	597	Grid	751702.4849	3858462.113	262.12	642	Grid	751819.327	3857613.998	284.66
553	Grid	751351.2289	3859573.518	197.8	598	Grid	751704.3584	3858367.657	282.02	643	Grid	751821.2005	3857519.543	290.15
554	Grid	751203.1047	3859760.485	203.98	599	Grid	751706.2319	3858273.202	263.14	644	Grid	751823.074	3857425.087	273.81
555	Grid	751044.0188	3859822.045	201.42	600	Grid	751708.1054	3858178.747	265.92	645	Grid	751854.7316	3859115.874	232.17
556	Grid	750884.9329	3859883.605	193.65	601	Grid	751709.979	3858084.291	260.7	646	Grid	751818.2588	3859198.937	217.79
557	Grid	750725.8469	3859945.165	196.03	602	Grid	751711.8525	3857989.836	245.1	647	Grid	751781.7861	3859282.001	215.38
558	Grid	751593.1369	3858932.406	220.95	603	Grid	751713.726	3857895.381	244.57	648	Grid	751745.3133	3859365.064	222.31
559	Grid	751595.0104	3858837.951	220.53	604	Grid	751715.5996	3857800.925	253.96	649	Grid	751708.8405	3859448.128	216.3
560	Grid	751596.8839	3858743.495	215.81	605	Grid	751717.4731	3857706.47	273.91	650	Grid	751672.3678	3859531.191	213.63
561	Grid	751598.7575	3858649.04	232.39	606	Grid	751719.3466	3857612.015	283.18	651	Grid	751635.895	3859614.254	204.93
562	Grid	751600.631	3858554.585	246.55	607	Grid	751721.2201	3857517.56	270.17	652	Grid	751599.4222	3859697.318	165.66
563	Grid	751602.5045	3858460.129	263.65	608	Grid	751723.0937	3857423.104	257	653	Grid	751562.9495	3859780.381	147.12
564	Grid	751604.378	3858365.674	266.95	609	Grid	751754.1901	3859115.169	226.1	654	Grid	751526.4767	3859863.445	145.36
565	Grid	751606.2516	3858271.219	248.9	610	Grid	751717.1562	3859199.51	219.05	655	Grid	751405.3992	3859979.247	145
566	Grid	751608.1251	3858176.764	245.05	611	Grid	751680.1224	3859283.851	225.38	656	Grid	751320.7944	3860011.985	145
567	Grid	751609.9986	3858082.308	235.35	612	Grid	751643.0885	3859368.193	225.45	657	Grid	751236.1896	3860044.724	143.56
568	Grid	751611.8722	3857987.853	239.05	613	Grid	751606.0546	3859452.534	222.99	658	Grid	751151.5848	3860077.463	143
569	Grid	751613.7457	3857893.398	268.58	614	Grid	751569.0207	3859536.875	222	659	Grid	751066.98	3860110.201	143.29
570	Grid	751615.6192	3857798.942	263.95	615	Grid	751531.9868	3859621.217	198.93	660	Grid	750982.3752	3860142.94	143.05
571	Grid	751617.4928	3857704.487	284.03	616	Grid	751494.9529	3859705.558	184.49	661	Grid	750897.7705	3860175.679	143.99
572	Grid	751619.3663	3857610.032	273.2	617	Grid	751457.9191	3859789.899	160.45	662	Grid	750813.1657	3860208.417	143.8
573	Grid	751621.2398	3857515.576	255.93	618	Grid	751334.9788	3859907.483	145.83	663	Grid	750728.5609	3860241.156	142.71
574	Grid	751623.1133	3857421.121	272.87	619	Grid	751249.0724	3859940.725	144.95	664	Grid	750643.9561	3860273.895	140.87
575	Grid	751653.524	3859114.747	229.22	620	Grid	751163.166	3859973.967	143.6	665	Grid	751891.2043	3859032.811	233.49
576	Grid	751615.8043	3859200.651	231.5	621	Grid	751077.2596	3860007.21	144	666	Grid	751893.0779	3858938.355	235.32
577	Grid	751578.0846	3859286.554	231.81	622	Grid	750991.3532	3860040.452	145	667	Grid	751894.9514	3858843.9	241.56
578	Grid	751540.3649	3859372.457	227.24	623	Grid	750905.4468	3860073.695	145.18	668	Grid	751896.8249	3858749.445	245.25
579	Grid	751502.6452	3859458.36	220.31	624	Grid	750819.5404	3860106.937	145.09	669	Grid	751898.6985	3858654.989	239.75
580	Grid	751464.9255	3859544.263	221.06	625	Grid	750733.634	3860140.179	145.1	670	Grid	751900.572	3858560.534	233.89
581	Grid	751427.2058	3859630.167	209.45	626	Grid	750647.7276	3860173.422	145.13	671	Grid	751902.4455	3858466.079	248.96
582	Grid	751389.4861	3859716.07	200.8	627	Grid	751791.224	3859030.827	230.92	672	Grid	751904.3191	3858371.623	278.11
583	Grid	751264.2692	3859835.831	163.57	628	Grid	751793.0975	3858936.372	235.62	673	Grid	751906.1926	3858277.168	295.56
584	Grid	751176.7719	3859869.689	160.14	629	Grid	751794.9711	3858841.917	242.69	674	Grid	751908.0661	3858182.713	295.71
585	Grid	751089.2746	3859903.547	156.38	630	Grid	751796.8446	3858747.462	242.12	675	Grid	751909.9396	3858088.258	285.43

TABLE C-19: Receptors Locations and Elevations

Receptor		UTMs		ELEV (m)	Receptor		UTMs		ELEV (m)	Receptor		UTMs		ELEV (m)
#	Type	X (m)	Y (m)		#	Type	X (m)	Y (m)		#	Type	X (m)	Y (m)	
676	Grid	751911.8132	3857993.802	260.64	721	Grid	751050.0253	3860314.79	142	766	Grid	752213.6277	3857905.296	289.69
677	Grid	751913.6867	3857899.347	276.29	722	Grid	750884.8207	3860378.717	141.12	767	Grid	752215.5012	3857810.841	287.35
678	Grid	751915.5602	3857804.892	257.18	723	Grid	750719.6161	3860442.645	140	768	Grid	752217.3748	3857716.386	273.36
679	Grid	751917.4338	3857710.436	255.34	724	Grid	752093.0385	3858942.321	215.15	769	Grid	752219.2483	3857621.93	276.88
680	Grid	751919.3073	3857615.981	277.69	725	Grid	752094.9121	3858847.866	222.32	770	Grid	752221.1218	3857527.475	282.32
681	Grid	751921.1808	3857521.526	290.8	726	Grid	752096.7856	3858753.411	233.06	771	Grid	752222.9953	3857433.02	292.51
682	Grid	751923.0543	3857427.071	287.89	727	Grid	752098.6591	3858658.956	245.04	772	Grid	752253.6509	3859126.088	171.2
683	Grid	751955.1795	3859116.792	217.11	728	Grid	752100.5327	3858564.5	245.91	773	Grid	752216.1762	3859211.434	166.74
684	Grid	751883.1692	3859280.789	197.14	729	Grid	752102.4062	3858470.045	233.04	774	Grid	752178.7014	3859296.779	159.38
685	Grid	751811.1589	3859444.786	216.03	730	Grid	752104.2797	3858375.59	238.65	775	Grid	752141.2266	3859382.124	169.01
686	Grid	751739.1485	3859608.783	187.72	731	Grid	752106.1532	3858281.134	252.61	776	Grid	752103.7519	3859467.47	178.67
687	Grid	751667.1382	3859772.78	146	732	Grid	752108.0268	3858186.679	285.21	777	Grid	752066.2771	3859552.815	157.67
688	Grid	751595.1279	3859936.777	145	733	Grid	752109.9003	3858092.224	295.98	778	Grid	752028.8023	3859638.161	152.94
689	Grid	751475.6026	3860051.094	144	734	Grid	752111.7738	3857997.769	295.4	779	Grid	751991.3276	3859723.506	151.42
690	Grid	751308.5624	3860115.732	142.98	735	Grid	752113.6474	3857903.313	293.52	780	Grid	751953.8528	3859808.851	149.12
691	Grid	751141.5222	3860180.37	143	736	Grid	752115.5209	3857808.858	273.81	781	Grid	751916.3781	3859894.197	147.33
692	Grid	750974.482	3860245.008	142	737	Grid	752117.3944	3857714.403	256.57	782	Grid	751878.9033	3859979.542	147
693	Grid	750807.4417	3860309.646	142	738	Grid	752119.268	3857619.947	270.02	783	Grid	751841.4285	3860064.887	146.83
694	Grid	750640.4015	3860374.284	140	739	Grid	752121.1415	3857525.492	271.13	784	Grid	751803.9538	3860150.233	145
695	Grid	751993.0582	3858940.338	228.01	740	Grid	752123.015	3857431.037	287.06	785	Grid	751679.5499	3860269.216	141.14
696	Grid	751994.9317	3858845.883	237.09	741	Grid	752155.875	3859119.085	194.14	786	Grid	751592.6208	3860302.854	141.46
697	Grid	751996.8053	3858751.428	242.5	742	Grid	752085.3343	3859279.735	200.26	787	Grid	751505.6917	3860336.492	142.32
698	Grid	751998.6788	3858656.972	245.6	743	Grid	752014.7935	3859440.385	176.02	788	Grid	751418.7626	3860370.13	141.5
699	Grid	752000.5523	3858562.517	243.12	744	Grid	751944.2528	3859601.035	160.31	789	Grid	751331.8335	3860403.769	141
700	Grid	752002.4259	3858468.062	243.71	745	Grid	751873.7121	3859761.685	146.52	790	Grid	751244.9045	3860437.407	142
701	Grid	752004.2994	3858373.607	257.71	746	Grid	751803.1713	3859922.335	146	791	Grid	751157.9754	3860471.045	142
702	Grid	752006.1729	3858279.151	279.82	747	Grid	751732.6306	3860082.985	144.96	792	Grid	751071.0463	3860504.683	142
703	Grid	752008.0464	3858184.696	295.76	748	Grid	751615.5446	3860194.97	142.23	793	Grid	750984.1172	3860538.321	141.01
704	Grid	752009.92	3858090.241	290.38	749	Grid	751451.9134	3860258.289	142.48	794	Grid	750897.1881	3860571.959	141
705	Grid	752011.7935	3857995.785	279.54	750	Grid	751288.2822	3860321.607	142.85	795	Grid	750810.259	3860605.597	140
706	Grid	752013.667	3857901.33	290.52	751	Grid	751124.6509	3860384.926	142	796	Grid	750723.3299	3860639.235	140
707	Grid	752015.5406	3857806.875	272.93	752	Grid	750961.0197	3860448.245	141.24	797	Grid	750636.4008	3860672.873	139
708	Grid	752017.4141	3857712.42	255.46	753	Grid	750797.3885	3860511.564	140.54	798	Grid	752291.1257	3859040.743	182.23
709	Grid	752019.2876	3857617.964	262.31	754	Grid	750633.7572	3860574.883	140	799	Grid	752292.9992	3858946.288	201.14
710	Grid	752021.1612	3857523.509	280.46	755	Grid	752193.0189	3858944.305	207.45	800	Grid	752294.8727	3858851.832	202.3
711	Grid	752023.0347	3857429.054	294.81	756	Grid	752194.8924	3858849.849	211.5	801	Grid	752296.7463	3858757.377	182.24
712	Grid	752055.5555	3859117.874	203.87	757	Grid	752196.7659	3858755.394	213.62	802	Grid	752298.6198	3858662.922	194.14
713	Grid	751984.3365	3859280.069	197.28	758	Grid	752198.6395	3858660.939	219.85	803	Grid	752300.4933	3858568.467	208.58
714	Grid	751913.1175	3859442.264	206.09	759	Grid	752200.513	3858566.483	224.84	804	Grid	752302.3669	3858474.011	222.74
715	Grid	751841.8985	3859604.459	175.45	760	Grid	752202.3865	3858472.028	213.6	805	Grid	752304.2404	3858379.556	239.47
716	Grid	751770.6795	3859766.653	146	761	Grid	752204.2601	3858377.573	231.32	806	Grid	752306.1139	3858285.101	234.55
717	Grid	751699.4605	3859928.848	145	762	Grid	752206.1336	3858283.118	244.14	807	Grid	752307.9874	3858190.645	232.41
718	Grid	751545.6392	3860123.007	143	763	Grid	752208.0071	3858188.662	259.76	808	Grid	752309.861	3858096.19	241.52
719	Grid	751380.4346	3860186.934	143.01	764	Grid	752209.8806	3858094.207	267.12	809	Grid	752311.7345	3858001.735	255.43
720	Grid	751215.23	3860250.862	143	765	Grid	752211.7542	3857999.752	275.01	810	Grid	752313.608	3857907.279	260.05

TABLE C-19: Receptors Locations and Elevations

Receptor		UTMs		ELEV (m)	Receptor		UTMs		ELEV (m)	Receptor		UTMs		ELEV (m)
#	Type	X (m)	Y (m)		#	Type	X (m)	Y (m)		#	Type	X (m)	Y (m)	
811	Grid	752315.4816	3857812.824	277.43	856	Grid	752413.5884	3857909.263	243.15	901	Grid	752507.9481	3858194.612	214.38
812	Grid	752317.3551	3857718.369	282.46	857	Grid	752415.4619	3857814.807	252.87	902	Grid	752509.8216	3858100.156	214.27
813	Grid	752319.2286	3857623.914	275.73	858	Grid	752417.3354	3857720.352	265.08	903	Grid	752511.6952	3858005.701	214.37
814	Grid	752321.1022	3857529.458	265.81	859	Grid	752419.209	3857625.897	263.45	904	Grid	752513.5687	3857911.246	217.81
815	Grid	752322.9757	3857435.003	269.24	860	Grid	752421.0825	3857531.441	233.48	905	Grid	752515.4422	3857816.79	234.83
816	Grid	752354.0721	3859127.067	158.17	861	Grid	752422.956	3857436.986	255.77	906	Grid	752517.3158	3857722.335	247.17
817	Grid	752317.0383	3859211.409	157.16	862	Grid	752454.4382	3859128.172	159.77	907	Grid	752519.1893	3857627.88	237.93
818	Grid	752280.0044	3859295.75	154.22	863	Grid	752417.7901	3859211.635	156.04	908	Grid	752521.0628	3857533.425	217.68
819	Grid	752242.9705	3859380.091	152.6	864	Grid	752381.142	3859295.097	155.1	909	Grid	752522.9364	3857438.969	255.04
820	Grid	752205.9366	3859464.433	152.44	865	Grid	752344.4939	3859378.56	154.89	910	Grid	752554.759	3859129.38	160.77
821	Grid	752168.9027	3859548.774	152.5	866	Grid	752307.8458	3859462.023	155.13	911	Grid	752518.4512	3859212.067	159.59
822	Grid	752131.8688	3859633.115	152.72	867	Grid	752271.1977	3859545.486	153.83	912	Grid	752482.1435	3859294.755	159.1
823	Grid	752094.835	3859717.457	151.16	868	Grid	752234.5496	3859628.948	152.69	913	Grid	752445.8358	3859377.443	162.3
824	Grid	752057.8011	3859801.798	150.59	869	Grid	752197.9014	3859712.411	151.64	914	Grid	752409.528	3859460.13	162.86
825	Grid	752020.7672	3859886.139	148.54	870	Grid	752161.2533	3859795.874	150.55	915	Grid	752373.2203	3859542.818	159.57
826	Grid	751983.7333	3859970.48	147.73	871	Grid	752124.6052	3859879.337	149	916	Grid	752336.9126	3859625.505	157.5
827	Grid	751946.6994	3860054.822	146.83	872	Grid	752087.9571	3859962.799	148	917	Grid	752300.6049	3859708.193	152.05
828	Grid	751909.6655	3860139.163	145.11	873	Grid	752051.309	3860046.262	147	918	Grid	752264.2971	3859790.88	151
829	Grid	751872.6317	3860223.504	143.29	874	Grid	752014.6609	3860129.725	145.63	919	Grid	752227.9894	3859873.568	150
830	Grid	751749.6914	3860341.088	141	875	Grid	751978.0128	3860213.188	144.69	920	Grid	752191.6817	3859956.255	148.2
831	Grid	751663.785	3860374.33	141	876	Grid	751941.3646	3860296.65	143.91	921	Grid	752155.3739	3860038.943	147.45
832	Grid	751577.8786	3860407.573	141	877	Grid	751819.705	3860413.009	141	922	Grid	752119.0662	3860121.63	146.84
833	Grid	751491.9722	3860440.815	141.94	878	Grid	751734.6935	3860445.905	141	923	Grid	752082.7585	3860204.318	146
834	Grid	751406.0658	3860474.057	141	879	Grid	751649.6819	3860478.801	141	924	Grid	752046.4508	3860287.006	145.18
835	Grid	751320.1594	3860507.3	141	880	Grid	751564.6704	3860511.697	141	925	Grid	752010.143	3860369.693	144
836	Grid	751234.253	3860540.542	141.52	881	Grid	751479.6588	3860544.594	141	926	Grid	751889.6133	3860484.971	141.66
837	Grid	751148.3466	3860573.784	141.82	882	Grid	751394.6473	3860577.49	141	927	Grid	751805.3914	3860517.562	141
838	Grid	751062.4402	3860607.027	142	883	Grid	751309.6358	3860610.386	141.06	928	Grid	751721.1694	3860550.152	141.25
839	Grid	750976.5338	3860640.269	141	884	Grid	751224.6242	3860643.282	141.01	929	Grid	751636.9475	3860582.743	142.2
840	Grid	750890.6274	3860673.511	140	885	Grid	751139.6127	3860676.178	141	930	Grid	751552.7255	3860615.333	141
841	Grid	750804.721	3860706.754	140	886	Grid	751054.6012	3860709.074	141	931	Grid	751468.5036	3860647.924	141
842	Grid	750718.8146	3860739.996	139	887	Grid	750969.5896	3860741.97	140.53	932	Grid	751384.2816	3860680.514	141
843	Grid	750632.9082	3860773.239	138.98	888	Grid	750884.5781	3860774.866	140	933	Grid	751300.0596	3860713.105	141
844	Grid	752391.106	3859042.726	166.11	889	Grid	750799.5665	3860807.762	139	934	Grid	751215.8377	3860745.696	141
845	Grid	752392.9795	3858948.271	169.11	890	Grid	750714.555	3860840.658	138.02	935	Grid	751131.6157	3860778.286	141
846	Grid	752394.8531	3858853.816	170.92	891	Grid	750629.5435	3860873.554	138	936	Grid	751047.3938	3860810.877	140.72
847	Grid	752396.7266	3858759.36	192.15	892	Grid	752491.0864	3859044.709	160.11	937	Grid	750963.1718	3860843.467	140
848	Grid	752398.6001	3858664.905	208.27	893	Grid	752492.9599	3858950.254	163.13	938	Grid	750878.9499	3860876.058	139.27
849	Grid	752400.4737	3858570.45	209.35	894	Grid	752494.8334	3858855.799	166.16	939	Grid	750794.7279	3860908.648	138
850	Grid	752402.3472	3858475.994	218.4	895	Grid	752496.7069	3858761.343	169.2	940	Grid	750710.5059	3860941.239	138
851	Grid	752404.2207	3858381.539	220.56	896	Grid	752498.5805	3858666.888	182.96	941	Grid	750626.284	3860973.829	137.28
852	Grid	752406.0943	3858287.084	214.46	897	Grid	752500.454	3858572.433	184.21	942	Grid	752591.0667	3859046.692	160.77
853	Grid	752407.9678	3858192.628	223.52	898	Grid	752502.3275	3858477.977	191.88	943	Grid	752592.9402	3858952.237	159
854	Grid	752409.8413	3858098.173	220.21	899	Grid	752504.2011	3858383.522	197.24	944	Grid	752594.8137	3858857.782	160.55
855	Grid	752411.7148	3858003.718	229.02	900	Grid	752506.0746	3858289.067	203.3	945	Grid	752596.6873	3858763.326	160.48

TABLE C-19: Receptors Locations and Elevations

Receptor		UTMs		ELEV (m)	Receptor		UTMs		ELEV (m)	Receptor		UTMs		ELEV (m)
#	Type	X (m)	Y (m)		#	Type	X (m)	Y (m)		#	Type	X (m)	Y (m)	
946	Grid	752598.5608	3858668.871	159.09	991	Grid	750390.5123	3856797.884	316.15	1036	Grid	750850.529	3856392.898	294.76
947	Grid	752600.4343	3858574.416	162.27	992	Grid	750229.5683	3856795.572	301.46	1037	Grid	750991.4749	3856453.895	269.16
948	Grid	752602.3079	3858479.961	174.35	993	Grid	750703.8376	3856731.861	303.03	1038	Grid	751132.4208	3856514.892	266.88
949	Grid	752604.1814	3858385.505	183.51	994	Grid	750844.7835	3856792.857	308.09	1039	Grid	751273.3666	3856575.888	300.03
950	Grid	752606.0549	3858291.05	198.46	995	Grid	750985.7294	3856853.854	296.93	1040	Grid	751442.3835	3856708.359	324.92
951	Grid	752607.9284	3858196.595	206.31	996	Grid	751154.7463	3856986.325	306.49	1041	Grid	751498.5256	3856851.308	335.18
952	Grid	752609.802	3858102.139	208.8	997	Grid	751210.8883	3857129.274	312.22	1042	Grid	751554.6676	3856994.257	325.16
953	Grid	752611.6755	3858007.684	205.45	998	Grid	751267.0303	3857272.223	317.09	1043	Grid	751610.8096	3857137.206	330.42
954	Grid	752613.549	3857913.229	201.28	999	Grid	750552.8926	3856700.206	296.83	1044	Grid	751666.9516	3857280.155	295.13
955	Grid	752615.4226	3857818.774	212.47	1000	Grid	750391.9486	3856697.894	302.41	1045	Grid	750558.6381	3856300.247	313.26
956	Grid	752617.2961	3857724.318	224.63	1001	Grid	750231.0046	3856695.582	279.93	1046	Grid	750397.6941	3856297.935	316.85
957	Grid	752619.1696	3857629.863	220.35	1002	Grid	750705.274	3856631.871	302.23	1047	Grid	750236.7501	3856295.623	318.98
958	Grid	752621.0432	3857535.408	206.49	1003	Grid	750846.2198	3856692.867	301.22	1048	Grid	750711.0195	3856231.912	303.03
959	Grid	752622.9167	3857440.952	229.48	1004	Grid	750987.1657	3856753.864	292.86	1049	Grid	750851.9653	3856292.909	310.7
960	Grid	750624.7464	3857301.3	299.31	1005	Grid	751128.1116	3856814.861	311.43	1050	Grid	750992.9112	3856353.905	292.59
961	Grid	750463.8024	3857298.988	287.75	1006	Grid	751226.6556	3856916.834	305.6	1051	Grid	751133.8571	3856414.902	262
962	Grid	750302.8584	3857296.676	277.65	1007	Grid	751282.7976	3857059.783	330.2	1052	Grid	751274.803	3856475.899	288.04
963	Grid	750696.6557	3857231.809	288.72	1008	Grid	751338.9396	3857202.732	313.37	1053	Grid	751415.7489	3856536.895	291.06
964	Grid	750545.7108	3857200.155	298.47	1009	Grid	750554.329	3856600.217	290.72	1054	Grid	751514.2929	3856638.868	307.15
965	Grid	750384.7668	3857197.843	302.66	1010	Grid	750393.385	3856597.905	288.59	1055	Grid	751570.4349	3856781.817	327.51
966	Grid	750223.8228	3857195.531	278.74	1011	Grid	750232.441	3856595.593	269.9	1056	Grid	751626.5769	3856924.766	338.39
967	Grid	750698.0921	3857131.819	300.15	1012	Grid	750706.7103	3856531.881	292.9	1057	Grid	751682.7189	3857067.715	310.57
968	Grid	750867.109	3857264.29	301.56	1013	Grid	750847.6562	3856592.878	297.82	1058	Grid	751738.861	3857210.664	314.07
969	Grid	750547.1471	3857100.165	317.74	1014	Grid	750988.6021	3856653.874	284.65	1059	Grid	750560.0745	3856200.258	282.32
970	Grid	750386.2031	3857097.853	310.4	1015	Grid	751129.548	3856714.871	292.26	1060	Grid	750399.1305	3856197.946	294.96
971	Grid	750225.2591	3857095.541	288.01	1016	Grid	751298.5649	3856847.342	298.62	1061	Grid	750238.1865	3856195.634	298.49
972	Grid	750699.5284	3857031.83	303.18	1017	Grid	751354.7069	3856990.291	317.93	1062	Grid	750712.4558	3856131.922	280.39
973	Grid	750840.4743	3857092.826	287.9	1018	Grid	751410.849	3857133.24	321.54	1063	Grid	750853.4017	3856192.919	293.9
974	Grid	750939.0183	3857194.799	309.46	1019	Grid	751466.991	3857276.189	282.19	1064	Grid	750994.3476	3856253.916	290.95
975	Grid	750548.5835	3857000.175	312.18	1020	Grid	750555.7654	3856500.227	278.19	1065	Grid	751135.2935	3856314.912	269.57
976	Grid	750387.6395	3856997.863	314.3	1021	Grid	750394.8214	3856497.915	269.15	1066	Grid	751276.2394	3856375.909	260.19
977	Grid	750226.6955	3856995.551	272.84	1022	Grid	750233.8774	3856495.603	268.23	1067	Grid	751417.1853	3856436.906	272.62
978	Grid	750700.9648	3856931.84	316.96	1023	Grid	750708.1467	3856431.891	290.73	1068	Grid	751586.2022	3856569.377	281.85
979	Grid	750841.9107	3856992.837	302.53	1024	Grid	750849.0926	3856492.888	284.07	1069	Grid	751642.3442	3856712.326	306.52
980	Grid	751010.9276	3857125.308	315.6	1025	Grid	750990.0385	3856553.885	274.86	1070	Grid	751698.4862	3856855.275	319.72
981	Grid	751067.0696	3857268.257	301.63	1026	Grid	751130.9844	3856614.881	273.64	1071	Grid	751754.6283	3856998.224	322.89
982	Grid	750550.0199	3856900.186	298.19	1027	Grid	751271.9303	3856675.878	288.85	1072	Grid	751810.7703	3857141.173	295.08
983	Grid	750389.0759	3856897.874	310.3	1028	Grid	751370.4742	3856777.851	294.24	1073	Grid	751866.9123	3857284.122	271.35
984	Grid	750228.1319	3856895.562	305.44	1029	Grid	751426.6162	3856920.8	304.3	1074	Grid	750561.5109	3856100.268	264.33
985	Grid	750702.4012	3856831.85	304.49	1030	Grid	751482.7583	3857063.749	326.45	1075	Grid	750400.5669	3856097.956	277
986	Grid	750843.3471	3856892.847	318.68	1031	Grid	751538.9003	3857206.698	302.07	1076	Grid	750239.6229	3856095.644	282.62
987	Grid	750984.293	3856953.843	311.51	1032	Grid	750557.2018	3856400.237	290.43	1077	Grid	750713.8922	3856031.933	260.92
988	Grid	751082.8369	3857055.816	319.75	1033	Grid	750396.2578	3856397.925	285.1	1078	Grid	750854.8381	3856092.929	274.4
989	Grid	751138.979	3857198.765	299.64	1034	Grid	750235.3138	3856395.613	286.08	1079	Grid	750995.784	3856153.926	280.57
990	Grid	750551.4563	3856800.196	292.92	1035	Grid	750709.5831	3856331.902	318.66	1080	Grid	751136.7299	3856214.923	265.38

TABLE C-19: Receptors Locations and Elevations

Receptor		UTMs		ELEV (m)	Receptor		UTMs		ELEV (m)	Receptor		UTMs		ELEV (m)
#	Type	X (m)	Y (m)		#	Type	X (m)	Y (m)		#	Type	X (m)	Y (m)	
1081	Grid	751277.6758	3856275.919	253.6	1126	Grid	750404.876	3855797.987	235.57	1171	Grid	751284.8577	3855775.971	249.27
1082	Grid	751418.6217	3856336.916	256.72	1127	Grid	750243.932	3855795.675	233.09	1172	Grid	751425.8035	3855836.968	263.39
1083	Grid	751559.5675	3856397.913	298.65	1128	Grid	750718.2013	3855731.964	225.83	1173	Grid	751566.7494	3855897.964	259.31
1084	Grid	751658.1115	3856499.885	307.27	1129	Grid	750859.1472	3855792.96	228.87	1174	Grid	751707.6953	3855958.961	266.67
1085	Grid	751714.2535	3856642.834	308.54	1130	Grid	751000.0931	3855853.957	238.25	1175	Grid	751848.6412	3856019.957	289.44
1086	Grid	751770.3956	3856785.783	310.67	1131	Grid	751141.039	3855914.954	242.18	1176	Grid	752017.6581	3856152.429	302.12
1087	Grid	751826.5376	3856928.732	327.75	1132	Grid	751281.9849	3855975.95	238.7	1177	Grid	752073.8001	3856295.378	309.57
1088	Grid	751882.6796	3857071.681	299.73	1133	Grid	751422.9308	3856036.947	275.26	1178	Grid	752129.9422	3856438.327	315.34
1089	Grid	751938.8216	3857214.63	279.18	1134	Grid	751563.8767	3856097.944	301.15	1179	Grid	752186.0842	3856581.275	309.64
1090	Grid	750562.9473	3856000.278	250.89	1135	Grid	751704.8226	3856158.94	293.86	1180	Grid	752242.2262	3856724.224	328.75
1091	Grid	750402.0033	3855997.966	256.76	1136	Grid	751873.8395	3856291.411	324.27	1181	Grid	752298.3682	3856867.173	295.95
1092	Grid	750241.0593	3855995.654	268.88	1137	Grid	751929.9815	3856434.36	324.76	1182	Grid	752354.5103	3857010.122	297.65
1093	Grid	750715.3286	3855931.943	246.09	1138	Grid	751986.1235	3856577.309	336	1183	Grid	752410.6523	3857153.071	307.78
1094	Grid	750856.2745	3855992.94	260	1139	Grid	752042.2655	3856720.258	329.28	1184	Grid	752466.7943	3857296.02	278.22
1095	Grid	750997.2204	3856053.936	262.23	1140	Grid	752098.4076	3856863.207	320.85	1185	Grid	750570.1291	3855500.33	220.89
1096	Grid	751138.1663	3856114.933	255.91	1141	Grid	752154.5496	3857006.156	299.62	1186	Grid	750409.1851	3855498.018	219.74
1097	Grid	751279.1121	3856175.93	249.17	1142	Grid	752210.6916	3857149.105	310.17	1187	Grid	750248.2411	3855495.706	219.55
1098	Grid	751420.058	3856236.926	266.98	1143	Grid	752266.8337	3857292.054	320.24	1188	Grid	750722.5105	3855431.995	226.31
1099	Grid	751561.0039	3856297.923	300.17	1144	Grid	750567.2564	3855700.309	226.76	1189	Grid	750863.4564	3855492.991	224.98
1100	Grid	751730.0208	3856430.394	327.19	1145	Grid	750406.3124	3855697.997	227.57	1190	Grid	751004.4022	3855553.988	224.94
1101	Grid	751786.1629	3856573.343	306.4	1146	Grid	750245.3684	3855695.685	226.04	1191	Grid	751145.3481	3855614.985	226.44
1102	Grid	751842.3049	3856716.292	329.58	1147	Grid	750719.6377	3855631.974	221.27	1192	Grid	751286.294	3855675.981	235.84
1103	Grid	751898.4469	3856859.241	316.86	1148	Grid	750860.5836	3855692.971	221.76	1193	Grid	751427.2399	3855736.978	254.97
1104	Grid	751954.5889	3857002.19	311.3	1149	Grid	751001.5295	3855753.967	228.61	1194	Grid	751568.1858	3855797.974	245.61
1105	Grid	752010.731	3857145.139	286.71	1150	Grid	751142.4754	3855814.964	231.29	1195	Grid	751709.1317	3855858.971	266.32
1106	Grid	752066.873	3857288.088	309.99	1151	Grid	751283.4213	3855875.961	238.59	1196	Grid	751850.0776	3855919.968	265.25
1107	Grid	750564.3836	3855900.289	240.24	1152	Grid	751424.3672	3855936.957	266.02	1197	Grid	751991.0235	3855980.964	270.15
1108	Grid	750403.4396	3855897.977	245.85	1153	Grid	751565.3131	3855997.954	274.22	1198	Grid	752089.5674	3856082.937	277.03
1109	Grid	750242.4956	3855895.665	250.51	1154	Grid	751706.2589	3856058.95	277.75	1199	Grid	752145.7095	3856225.886	284.93
1110	Grid	750716.765	3855831.953	230.74	1155	Grid	751847.2048	3856119.947	314.13	1200	Grid	752201.8515	3856368.835	289.76
1111	Grid	750857.7109	3855892.95	241.26	1156	Grid	751945.7488	3856221.92	329.36	1201	Grid	752257.9935	3856511.784	305.88
1112	Grid	750998.6567	3855953.947	250.53	1157	Grid	752001.8908	3856364.869	316.91	1202	Grid	752314.1355	3856654.733	317.95
1113	Grid	751139.6026	3856014.943	252.65	1158	Grid	752058.0328	3856507.818	328.76	1203	Grid	752370.2776	3856797.682	305.43
1114	Grid	751280.5485	3856075.94	241.39	1159	Grid	752114.1749	3856650.767	313.49	1204	Grid	752426.4196	3856940.631	269.91
1115	Grid	751421.4944	3856136.937	271.94	1160	Grid	752170.3169	3856793.716	329.86	1205	Grid	752482.5616	3857083.58	269.49
1116	Grid	751562.4403	3856197.933	312.21	1161	Grid	752226.4589	3856936.665	306.64	1206	Grid	752538.7036	3857226.529	280.13
1117	Grid	751703.3862	3856258.93	316.14	1162	Grid	752282.6009	3857079.614	315.62	1207	Grid	750571.5655	3855400.34	227.13
1118	Grid	751801.9301	3856360.903	321.58	1163	Grid	752338.743	3857222.563	316.6	1208	Grid	750410.6215	3855398.028	227.52
1119	Grid	751858.0722	3856503.852	323.71	1164	Grid	750568.6928	3855600.32	221.6	1209	Grid	750249.6775	3855395.716	227.34
1120	Grid	751914.2142	3856646.801	325.01	1165	Grid	750407.7488	3855598.008	221.43	1210	Grid	750320.9399	3857396.93	287.88
1121	Grid	751970.3562	3856789.75	340.12	1166	Grid	750246.8048	3855595.696	219.78	1211	Grid	750420.9298	3857398.35	291.12
1122	Grid	752026.4983	3856932.699	318.15	1167	Grid	750721.0741	3855531.984	220.84	1212	Grid	750520.9197	3857399.771	267.64
1123	Grid	752082.6403	3857075.647	291.33	1168	Grid	750862.02	3855592.981	221.98	1213	Grid	750620.9097	3857401.191	284.22
1124	Grid	752138.7823	3857218.596	318.29	1169	Grid	751002.9659	3855653.978	224.03	1214	Grid	750068.5429	3856500.634	282.2
1125	Grid	750565.82	3855800.299	233.48	1170	Grid	751143.9118	3855714.974	229.28	1215	Grid	749904.0149	3856499.234	307.7

TABLE C-19: Receptors Locations and Elevations

Receptor		UTMs		ELEV (m)	Receptor		UTMs		ELEV (m)	Receptor		UTMs		ELEV (m)
#	Type	X (m)	Y (m)		#	Type	X (m)	Y (m)		#	Type	X (m)	Y (m)	
1216	Grid	750069.3938	3856400.637	305.25	1261	Grid	750924.1527	3855290.983	235.41	1306	Grid	751741.2079	3855650.299	243.67
1217	Grid	749904.8658	3856399.237	329.91	1262	Grid	751074.8902	3855355.182	229.57	1307	Grid	751801.3341	3855800.87	254.25
1218	Grid	750070.2447	3856300.641	327.35	1263	Grid	751225.6276	3855419.38	228	1308	Grid	750166.1229	3854701.399	387.71
1219	Grid	749905.7167	3856299.241	317.59	1264	Grid	751406.7446	3855559.658	234.44	1309	Grid	750001.5949	3854699.999	355.44
1220	Grid	750071.0956	3856200.644	297	1265	Grid	750163.5702	3855001.388	314.04	1310	Grid	749837.0669	3854698.599	300.33
1221	Grid	749906.5676	3856199.244	296.97	1266	Grid	749999.0422	3854999.988	287.18	1311	Grid	750323.6148	3854633.779	383.46
1222	Grid	750071.9464	3856100.648	275.6	1267	Grid	749834.5142	3854998.588	319.55	1312	Grid	750472.3689	3854697.134	312.52
1223	Grid	749907.4184	3856099.248	281.95	1268	Grid	750321.7594	3854934.066	328.37	1313	Grid	750621.1229	3854760.488	271.66
1224	Grid	750072.7973	3856000.652	269.74	1269	Grid	750471.908	3854998.014	301.67	1314	Grid	750769.877	3854823.842	281.42
1225	Grid	749908.2693	3855999.252	270.46	1270	Grid	750622.0567	3855061.962	272.82	1315	Grid	750918.631	3854887.196	304.39
1226	Grid	750073.6482	3855900.655	253.66	1271	Grid	750772.2053	3855125.91	241.21	1316	Grid	751067.3851	3854950.55	277.42
1227	Grid	749909.1202	3855899.255	255.77	1272	Grid	750922.3539	3855189.858	245.88	1317	Grid	751216.1392	3855013.904	250.35
1228	Grid	750074.4991	3855800.659	240.01	1273	Grid	751072.5026	3855253.806	234.89	1318	Grid	751364.8932	3855077.258	240.13
1229	Grid	749909.9711	3855799.259	238.27	1274	Grid	751222.6512	3855317.754	230.82	1319	Grid	751513.6473	3855140.612	232.06
1230	Grid	750075.35	3855700.663	226.57	1275	Grid	751372.7998	3855381.702	230.96	1320	Grid	751692.3812	3855279.044	240.37
1231	Grid	749910.822	3855699.263	231.91	1276	Grid	751478.135	3855489.457	232	1321	Grid	751752.3409	3855429.198	249.91
1232	Grid	750076.2009	3855600.666	215.22	1277	Grid	751538.6568	3855641.019	239.84	1322	Grid	751812.3005	3855579.353	243.88
1233	Grid	749911.6729	3855599.266	219.11	1278	Grid	750164.4211	3854901.392	318.44	1323	Grid	751872.2602	3855729.507	249.93
1234	Grid	750077.0518	3855500.67	220.1	1279	Grid	749999.8931	3854899.992	309.64	1324	Grid	751932.2199	3855879.662	256.71
1235	Grid	749912.5238	3855499.27	216.64	1280	Grid	749835.3651	3854898.592	336.25	1325	Grid	750166.9738	3854601.402	422.14
1236	Grid	750077.9027	3855400.673	226.11	1281	Grid	750322.3505	3854833.959	387.08	1326	Grid	750002.4458	3854600.002	364.98
1237	Grid	749913.3747	3855399.273	226.2	1282	Grid	750471.9796	3854897.685	336.31	1327	Grid	749837.9178	3854598.602	298.45
1238	Grid	750313.9397	3855332.17	233.58	1283	Grid	750621.6087	3854961.412	278.66	1328	Grid	749920.899	3856598.09	294.77
1239	Grid	750161.0175	3855301.377	232.88	1284	Grid	750771.2378	3855025.139	248.5	1329	Grid	750020.8981	3856597.649	268.6
1240	Grid	749996.4895	3855299.977	233.48	1285	Grid	750920.8669	3855088.866	254.64	1330	Grid	750120.8971	3856597.209	264.63
1241	Grid	749831.9615	3855298.577	233.22	1286	Grid	751070.496	3855152.593	248.61	1331	Grid	749722.4801	3856092.888	278.61
1242	Grid	750314.7906	3855232.174	258.35	1287	Grid	751220.125	3855216.319	235.4	1332	Grid	749624.3701	3856091.446	261.88
1243	Grid	750456.107	3855292.36	236.76	1288	Grid	751369.7541	3855280.046	231.28	1333	Grid	749526.2601	3856090.003	268.55
1244	Grid	750161.8684	3855201.381	244.49	1289	Grid	751549.5394	3855419.292	233.48	1334	Grid	749428.1501	3856088.561	247.07
1245	Grid	749997.3404	3855199.981	248.76	1290	Grid	751609.8518	3855570.329	239.33	1335	Grid	749723.9503	3855992.899	264.77
1246	Grid	749832.8124	3855198.581	260.05	1291	Grid	751670.1642	3855721.367	257.16	1336	Grid	749625.8403	3855991.457	254.64
1247	Grid	750315.6415	3855132.178	269.55	1292	Grid	750165.272	3854801.395	361.08	1337	Grid	749527.7303	3855990.014	259.36
1248	Grid	750456.9579	3855192.364	264.23	1293	Grid	750000.744	3854799.995	347.49	1338	Grid	749429.6203	3855988.572	243.97
1249	Grid	750598.2742	3855252.55	239.66	1294	Grid	749836.216	3854798.595	332.8	1339	Grid	749725.4204	3855892.91	252.97
1250	Grid	750739.5906	3855312.737	230.99	1295	Grid	750322.9705	3854733.864	403.52	1340	Grid	749627.3104	3855891.467	247.24
1251	Grid	750880.9069	3855372.923	230.98	1296	Grid	750472.1378	3854797.394	349.26	1341	Grid	749529.2004	3855890.025	255.9
1252	Grid	751022.2233	3855433.11	227.97	1297	Grid	750621.305	3854860.924	277.86	1342	Grid	749431.0904	3855888.582	243.16
1253	Grid	751163.5396	3855493.296	226.97	1298	Grid	750770.4723	3854924.454	260.02	1343	Grid	749726.8905	3855792.921	241.25
1254	Grid	750162.7193	3855101.384	276.2	1299	Grid	750919.6396	3854987.984	276.57	1344	Grid	749628.7805	3855791.478	243.05
1255	Grid	749998.1913	3855099.984	266.78	1300	Grid	751068.8068	3855051.514	271.34	1345	Grid	749530.6705	3855790.036	234.32
1256	Grid	749833.6633	3855098.584	302.45	1301	Grid	751217.9741	3855115.044	241.77	1346	Grid	749432.5605	3855788.593	218.12
1257	Grid	750321.2029	3855034.187	288.92	1302	Grid	751367.1414	3855178.575	235.68	1347	Grid	749728.3606	3855692.932	230.38
1258	Grid	750471.9404	3855098.386	283.84	1303	Grid	751516.3086	3855242.105	231	1348	Grid	749630.2506	3855691.489	233.12
1259	Grid	750622.6778	3855162.585	248.3	1304	Grid	751620.9554	3855349.156	232.05	1349	Grid	749532.1406	3855690.047	215.84
1260	Grid	750773.4153	3855226.784	233.82	1305	Grid	751681.0816	3855499.727	241.99	1350	Grid	749434.0306	3855688.604	207.84

TABLE C-19: Receptors Locations and Elevations

Receptor		UTMs		ELEV (m)	Receptor		UTMs		ELEV (m)	Receptor		UTMs		ELEV (m)
#	Type	X (m)	Y (m)		#	Type	X (m)	Y (m)		#	Type	X (m)	Y (m)	
1351	Grid	750162.0386	3855736.674	230.49	1396	Grid	749928.631	3854530.499	337.35	1441	Grid	750892.5782	3854639.189	373.82
1352	Grid	749729.8308	3855592.942	223.23	1397	Grid	749844.1122	3854494.504	341.95	1442	Grid	750979.5828	3854676.244	329.34
1353	Grid	749631.7208	3855591.5	219.26	1398	Grid	749746.0022	3854493.061	298.15	1443	Grid	751066.5874	3854713.298	299.72
1354	Grid	749533.6108	3855590.057	208.16	1399	Grid	749647.8922	3854491.619	258.27	1444	Grid	751153.5921	3854750.353	316.69
1355	Grid	749435.5008	3855588.615	214.07	1400	Grid	749549.7822	3854490.176	308.49	1445	Grid	751276.7532	3854874.789	260.78
1356	Grid	749731.3009	3855492.953	213.11	1401	Grid	749451.6722	3854488.734	310.57	1446	Grid	751312.9097	3854962.17	253.95
1357	Grid	749633.1909	3855491.511	209.1	1402	Grid	749935.0728	3854432.628	348.56	1447	Grid	751457.5357	3855311.697	231
1358	Grid	749535.0809	3855490.068	214.75	1403	Grid	750024.5633	3854470.741	358.26	1448	Grid	749848.5226	3854194.536	329.62
1359	Grid	749436.9709	3855488.626	221.49	1404	Grid	750114.0538	3854508.854	407.25	1449	Grid	749750.4126	3854193.094	277.72
1360	Grid	749732.771	3855392.964	220.54	1405	Grid	751321.5863	3855467.368	230	1450	Grid	749652.3026	3854191.651	315.25
1361	Grid	749634.661	3855391.521	217.73	1406	Grid	749845.5823	3854394.515	310.13	1451	Grid	749554.1926	3854190.209	325.94
1362	Grid	749536.551	3855390.079	229.54	1407	Grid	749747.4723	3854393.072	288.84	1452	Grid	749456.0826	3854188.766	319.91
1363	Grid	749438.441	3855388.636	233.55	1408	Grid	749649.3623	3854391.63	267.72	1453	Grid	749526.671	3856189.892	282.1
1364	Grid	749734.2412	3855292.975	243.07	1409	Grid	749551.2523	3854390.187	317.28	1454	Grid	749626.662	3856191.234	269.09
1365	Grid	749636.1312	3855291.532	234.81	1410	Grid	749453.1423	3854388.745	304.11	1455	Grid	749726.653	3856192.576	281.5
1366	Grid	749538.0212	3855290.09	256.82	1411	Grid	749935.2172	3854332.074	304.17	1456	Grid	749813.9767	3855950.81	265.09
1367	Grid	749439.9112	3855288.647	244.33	1412	Grid	750023.3819	3854369.622	326.23	1457	Grid	751259.7395	3855551.098	228.97
1368	Grid	749735.7113	3855192.986	261.51	1413	Grid	750111.5465	3854407.171	355.58	1458	Grid	749274.6876	3855687.074	207.51
1369	Grid	749637.6013	3855191.543	268	1414	Grid	750199.7112	3854444.719	394.38	1459	Grid	749113.3726	3855684.904	212.16
1370	Grid	749539.4913	3855190.101	273.05	1415	Grid	750287.8759	3854482.268	366.63	1460	Grid	749276.0326	3855587.083	216.83
1371	Grid	749441.3813	3855188.658	277.1	1416	Grid	750376.0406	3854519.816	384.3	1461	Grid	749114.7176	3855584.913	217.83
1372	Grid	749737.1814	3855092.996	270.7	1417	Grid	750464.2053	3854557.365	349.04	1462	Grid	749277.3777	3855487.092	220.36
1373	Grid	749639.0714	3855091.554	289.94	1418	Grid	750552.37	3854594.913	291.91	1463	Grid	749116.0627	3855484.922	234.16
1374	Grid	749540.9614	3855090.111	282.31	1419	Grid	750640.5347	3854632.462	271.21	1464	Grid	749278.7228	3855387.101	230.72
1375	Grid	749442.8514	3855088.669	273.37	1420	Grid	750728.6994	3854670.01	304	1465	Grid	749117.4078	3855384.931	265.55
1376	Grid	749738.6516	3854993.007	291.15	1421	Grid	750816.8641	3854707.559	316.22	1466	Grid	749280.0679	3855287.11	224.52
1377	Grid	749640.5416	3854991.565	309.71	1422	Grid	750905.0288	3854745.107	340.58	1467	Grid	749118.7529	3855284.94	285.59
1378	Grid	749542.4316	3854990.122	278.06	1423	Grid	750993.1935	3854782.656	315.54	1468	Grid	749281.4129	3855187.119	230.68
1379	Grid	749444.3216	3854988.68	280.28	1424	Grid	751081.3582	3854820.204	281.16	1469	Grid	749120.0979	3855184.949	274.39
1380	Grid	749740.1217	3854893.018	326.6	1425	Grid	749847.0525	3854294.525	310.07	1470	Grid	749282.758	3855087.128	249.81
1381	Grid	749642.0117	3854891.575	306.21	1426	Grid	749748.9425	3854293.083	281.25	1471	Grid	749121.443	3855084.958	242.14
1382	Grid	749543.9017	3854890.133	280.93	1427	Grid	749650.8325	3854291.64	286.24	1472	Grid	749284.1031	3854987.137	248.56
1383	Grid	749445.7917	3854888.69	273.8	1428	Grid	749552.7225	3854290.198	327.02	1473	Grid	749122.7881	3854984.967	286.41
1384	Grid	749741.5918	3854793.029	318.55	1429	Grid	749454.6125	3854288.755	273.12	1474	Grid	749285.4482	3854887.146	249.73
1385	Grid	749643.4818	3854791.586	286.6	1430	Grid	749935.5272	3854231.591	348.52	1475	Grid	749124.1332	3854884.976	294.43
1386	Grid	749545.3718	3854790.144	275.95	1431	Grid	750022.5319	3854268.645	354.06	1476	Grid	749286.7932	3854787.155	259.22
1387	Grid	749447.2618	3854788.701	262.27	1432	Grid	750109.5365	3854305.699	380.84	1477	Grid	749125.4782	3854784.985	282.81
1388	Grid	749743.0619	3854693.04	276.11	1433	Grid	750196.5411	3854342.754	377.72	1478	Grid	749288.1383	3854687.165	261.72
1389	Grid	749644.9519	3854691.597	272.4	1434	Grid	750283.5458	3854379.808	373.87	1479	Grid	749126.8233	3854684.995	289.93
1390	Grid	749546.8419	3854690.155	255.89	1435	Grid	750370.5504	3854416.863	325.53	1480	Grid	749289.4834	3854587.174	260.02
1391	Grid	749448.7319	3854688.712	256.39	1436	Grid	750457.555	3854453.917	348.73	1481	Grid	749128.1684	3854585.004	317.65
1392	Grid	749744.5321	3854593.05	299.07	1437	Grid	750544.5597	3854490.972	288.94	1482	Grid	749290.8284	3854487.183	257.07
1393	Grid	749646.4221	3854591.608	257.94	1438	Grid	750631.5643	3854528.026	280.3	1483	Grid	749129.5134	3854485.013	294.11
1394	Grid	749548.3121	3854590.165	257.31	1439	Grid	750718.5689	3854565.08	325	1484	Grid	749292.1735	3854387.192	285.05
1395	Grid	749450.2021	3854588.723	305.33	1440	Grid	750805.5735	3854602.135	359.79	1485	Grid	749130.8585	3854385.022	266.4

TABLE C-19: Receptors Locations and Elevations

Receptor		UTMs		ELEV (m)	Receptor		UTMs		ELEV (m)	Receptor		UTMs		ELEV (m)
#	Type	X (m)	Y (m)		#	Type	X (m)	Y (m)		#	Type	X (m)	Y (m)	
1486	Grid	749293.5186	3854287.201	298.14	1531	Grid	748678.8358	3855306.225	294.45	1576	Grid	748532.4454	3854659.156	314.71
1487	Grid	749132.2036	3854285.031	316.27	1532	Grid	748773.7318	3855274.025	302.1	1577	Grid	748628.077	3854626.706	346.95
1488	Grid	749294.8637	3854187.21	297.51	1533	Grid	748868.6277	3855241.825	302.61	1578	Grid	748723.7086	3854594.257	360.07
1489	Grid	749133.5487	3854185.04	358.23	1534	Grid	748963.5237	3855209.624	265.32	1579	Grid	748819.3401	3854561.807	337.51
1490	Grid	749376.8662	3854088.304	303.55	1535	Grid	748617.192	3855227.607	257.21	1580	Grid	748914.9717	3854529.357	370.67
1491	Grid	749215.5512	3854086.134	295.17	1536	Grid	748713.4632	3855194.94	268.73	1581	Grid	749010.6033	3854496.908	332.84
1492	Grid	749054.2362	3854083.964	373.66	1537	Grid	748809.7345	3855162.274	297.59	1582	Grid	748183.7597	3854677.938	307.01
1493	Grid	749449.9109	3854013.301	349.36	1538	Grid	748906.0057	3855129.607	276.12	1583	Grid	748280.0309	3854645.271	345.36
1494	Grid	749593.3101	3854063.279	349.59	1539	Grid	749002.277	3855096.94	253.15	1584	Grid	748376.3022	3854612.604	365.9
1495	Grid	749297.5538	3853987.228	334.57	1540	Grid	748555.4847	3855149.011	295.22	1585	Grid	748472.5735	3854579.937	312.84
1496	Grid	749136.2388	3853985.058	351.63	1541	Grid	748652.8138	3855115.985	275.59	1586	Grid	748568.8447	3854547.271	322.27
1497	Grid	749455.2393	3853914.699	368.34	1542	Grid	748750.143	3855082.96	300.95	1587	Grid	748665.116	3854514.604	363.68
1498	Grid	749606.6051	3853967.452	359.28	1543	Grid	748847.4722	3855049.934	271.15	1588	Grid	748761.3872	3854481.937	377
1499	Grid	749757.971	3854020.206	301.57	1544	Grid	748944.8014	3855016.908	258.51	1589	Grid	748857.6585	3854449.27	372.09
1500	Grid	749909.3368	3854072.96	329.49	1545	Grid	748493.0791	3855070.652	322.37	1590	Grid	748953.9298	3854416.603	328.81
1501	Grid	750060.7026	3854125.714	360.19	1546	Grid	748587.9751	3855038.452	302.56	1591	Grid	748121.9531	3854599.376	316.66
1502	Grid	750212.0684	3854178.467	380.52	1547	Grid	748682.871	3855006.252	320.7	1592	Grid	748218.7857	3854566.518	349.88
1503	Grid	750363.4343	3854231.221	334.48	1548	Grid	748777.767	3854974.052	319.42	1593	Grid	748315.6183	3854533.661	395.14
1504	Grid	750559.5001	3854350.5	277.7	1549	Grid	748872.6629	3854941.852	281.67	1594	Grid	748412.4509	3854500.804	354.99
1505	Grid	749298.8989	3853887.237	366.73	1550	Grid	748967.5589	3854909.652	259.7	1595	Grid	748509.2835	3854467.946	329.57
1506	Grid	749137.5839	3853885.067	418.34	1551	Grid	748431.3519	3854992.063	285.9	1596	Grid	748606.1161	3854435.089	356.99
1507	Grid	749455.5885	3853814.361	393.82	1552	Grid	748527.2064	3854959.538	342.47	1597	Grid	748702.9487	3854402.232	394.82
1508	Grid	749604.9627	3853866.42	365.04	1553	Grid	748623.0609	3854927.012	331.59	1598	Grid	748799.7813	3854369.375	344.74
1509	Grid	749754.3369	3853918.48	317.27	1554	Grid	748718.9154	3854894.487	352.9	1599	Grid	748896.6139	3854336.517	316.01
1510	Grid	749903.7111	3853970.539	298.74	1555	Grid	748814.7699	3854861.961	311.48	1600	Grid	748993.4465	3854303.66	298.59
1511	Grid	750053.0852	3854022.599	327.08	1556	Grid	748910.6244	3854829.436	265.27	1601	Grid	748060.1335	3854520.818	320.54
1512	Grid	750202.4594	3854074.659	380.8	1557	Grid	749006.4789	3854796.911	307.68	1602	Grid	748157.4627	3854487.792	345.02
1513	Grid	750351.8336	3854126.718	336.45	1558	Grid	748369.5928	3854913.485	265.29	1603	Grid	748254.7918	3854454.766	383.29
1514	Grid	750501.2078	3854178.778	291.7	1559	Grid	748466.2461	3854880.688	303.59	1604	Grid	748352.121	3854421.74	386.29
1515	Grid	750620.0066	3854270.457	311.57	1560	Grid	748562.8994	3854847.892	355.93	1605	Grid	748449.4502	3854388.715	338.73
1516	Grid	750708.2303	3854401.756	347.54	1561	Grid	748659.5526	3854815.095	373.51	1606	Grid	748546.7794	3854355.689	342.27
1517	Grid	749300.2439	3853787.246	380.73	1562	Grid	748756.2059	3854782.299	343.6	1607	Grid	748644.1086	3854322.663	375.29
1518	Grid	749138.9289	3853785.076	434.12	1563	Grid	748852.8592	3854749.502	280.94	1608	Grid	748741.4378	3854289.637	374.22
1519	Grid	748985.2671	3855699.919	209.16	1564	Grid	748949.5125	3854716.706	311.11	1609	Grid	748838.767	3854256.611	374.75
1520	Grid	748925.6076	3855620.628	214.44	1565	Grid	748307.8091	3854834.914	318.22	1610	Grid	748936.0961	3854223.586	333.86
1521	Grid	749015.9847	3855589.961	217.19	1566	Grid	748405.1382	3854801.889	275.28	1611	Grid	749033.4253	3854190.56	344.37
1522	Grid	748864.5925	3855541.797	220.4	1567	Grid	748502.4674	3854768.863	302.67	1612	Grid	747998.3031	3854442.263	356.82
1523	Grid	748959.4885	3855509.597	226.34	1568	Grid	748599.7966	3854735.837	356.52	1613	Grid	748096.0746	3854409.088	379.17
1524	Grid	748803.1602	3855463.108	239.62	1569	Grid	748697.1258	3854702.811	368.87	1614	Grid	748193.8462	3854375.912	385.11
1525	Grid	748900.4894	3855430.082	243.24	1570	Grid	748794.455	3854669.786	318.12	1615	Grid	748291.6178	3854342.736	399.9
1526	Grid	748997.8186	3855397.056	258.23	1571	Grid	748891.7842	3854636.76	320.21	1616	Grid	748389.3894	3854309.56	359.12
1527	Grid	748740.3826	3855384.875	282.43	1572	Grid	748989.1134	3854603.734	350.2	1617	Grid	748487.161	3854276.384	366.41
1528	Grid	748833.4178	3855353.306	287.43	1573	Grid	748245.5506	3854756.505	334.55	1618	Grid	748584.9326	3854243.208	385.01
1529	Grid	748926.4531	3855321.738	284.96	1574	Grid	748341.1822	3854724.056	345.82	1619	Grid	748682.7042	3854210.032	421.8
1530	Grid	749019.4883	3855290.169	298.08	1575	Grid	748436.8138	3854691.606	294.86	1620	Grid	748780.4758	3854176.856	400.47

TABLE C-19: Receptors Locations and Elevations

Receptor		UTMs		ELEV (m)	Receptor		UTMs		ELEV (m)	Receptor		UTMs		ELEV (m)
#	Type	X (m)	Y (m)		#	Type	X (m)	Y (m)		#	Type	X (m)	Y (m)	
1621	Grid	748878.2474	3854143.68	361.06	1666	Grid	748651.6679	3855916.853	200.15	1711	Grid	748130.843	3855095.292	299.86
1622	Grid	747936.1307	3854363.825	347.29	1667	Grid	748562.1881	3855779.533	213.29	1712	Grid	748262.6042	3855018.549	247
1623	Grid	748032.6351	3854331.079	381.92	1668	Grid	748601.5633	3855632.223	228.02	1713	Grid	747858.4089	3856020.488	264.17
1624	Grid	748129.1394	3854298.333	402.24	1669	Grid	748687.1315	3855520.196	236.7	1714	Grid	747768.9292	3855883.168	243.27
1625	Grid	748225.6438	3854265.588	410.64	1670	Grid	748552.5105	3855929.808	206.9	1715	Grid	747808.3043	3855735.858	248.2
1626	Grid	748322.1482	3854232.842	405.16	1671	Grid	748463.0307	3855792.487	215.99	1716	Grid	747847.6795	3855588.548	310.06
1627	Grid	748418.6525	3854200.096	408.88	1672	Grid	748502.4059	3855645.177	230.67	1717	Grid	747887.0547	3855441.238	292.18
1628	Grid	748515.1569	3854167.35	424.37	1673	Grid	748607.6617	3855459.496	256.36	1718	Grid	747926.4299	3855293.928	266.89
1629	Grid	748611.6612	3854134.604	437.26	1674	Grid	748453.3532	3855942.762	209.98	1719	Grid	747965.8051	3855146.619	273.03
1630	Grid	748708.1656	3854101.858	411.23	1675	Grid	748363.8734	3855805.441	210.48	1720	Grid	748051.3733	3855034.592	320.44
1631	Grid	748804.67	3854069.112	385.55	1676	Grid	748403.2486	3855658.132	252.65	1721	Grid	748183.1344	3854957.848	260.99
1632	Grid	748901.1743	3854036.366	406.72	1677	Grid	748442.6237	3855510.822	281.36	1722	Grid	747759.2516	3856033.443	275.11
1633	Grid	748997.6787	3854003.62	372.3	1678	Grid	748528.1919	3855398.795	277.98	1723	Grid	747669.7718	3855896.122	272.11
1634	Grid	747874.2983	3854285.272	344.23	1679	Grid	748354.1958	3855955.716	209	1724	Grid	747709.147	3855748.812	250.76
1635	Grid	747971.235	3854252.379	358.45	1680	Grid	748264.716	3855818.396	220.54	1725	Grid	747748.5222	3855601.502	287.05
1636	Grid	748068.1717	3854219.486	390.11	1681	Grid	748304.0912	3855671.086	222.23	1726	Grid	747787.8973	3855454.193	328.81
1637	Grid	748165.1085	3854186.594	371.35	1682	Grid	748343.4664	3855523.776	262.46	1727	Grid	747827.2725	3855306.883	317.31
1638	Grid	748262.0452	3854153.701	406.45	1683	Grid	748448.7221	3855338.094	245.43	1728	Grid	747866.6477	3855159.573	245.39
1639	Grid	748358.9819	3854120.809	420.98	1684	Grid	748255.0384	3855968.671	207.24	1729	Grid	747971.9035	3854973.891	336.15
1640	Grid	748455.9187	3854087.916	440.19	1685	Grid	748165.5586	3855831.35	240.44	1730	Grid	748103.6646	3854897.148	272.39
1641	Grid	748552.8554	3854055.023	440.89	1686	Grid	748204.9338	3855684.04	225.63	1731	Grid	747660.0942	3856046.397	264.4
1642	Grid	748649.7921	3854022.131	442.04	1687	Grid	748244.309	3855536.731	219.99	1732	Grid	747570.6144	3855909.077	308.28
1643	Grid	748746.7288	3853989.238	426.92	1688	Grid	748283.6842	3855389.421	235.72	1733	Grid	747609.9896	3855761.767	259.81
1644	Grid	748843.6656	3853956.346	428.02	1689	Grid	748369.2524	3855277.394	276.7	1734	Grid	747649.3648	3855614.457	270.22
1645	Grid	748940.6023	3853923.453	415.4	1690	Grid	748155.881	3855981.625	217.15	1735	Grid	747688.74	3855467.147	328.72
1646	Grid	749037.539	3853890.56	410.42	1691	Grid	748066.4013	3855844.305	230.69	1736	Grid	747728.1152	3855319.837	315.82
1647	Grid	747812.4579	3854206.721	328.94	1692	Grid	748105.7765	3855696.995	253.25	1737	Grid	747767.4903	3855172.527	273.29
1648	Grid	747909.7871	3854173.695	352.41	1693	Grid	748145.1516	3855549.685	239.39	1738	Grid	747806.8655	3855025.217	309.24
1649	Grid	748007.1162	3854140.669	382.91	1694	Grid	748184.5268	3855402.375	234.54	1739	Grid	747892.4337	3854913.191	337.72
1650	Grid	748104.4454	3854107.644	366.9	1695	Grid	748289.7826	3855216.693	265.49	1740	Grid	748024.1949	3854836.447	336.4
1651	Grid	748201.7746	3854074.618	366.65	1696	Grid	748421.5437	3855139.95	329.75	1741	Grid	747560.9368	3856059.351	250.8
1652	Grid	748299.1038	3854041.592	392.7	1697	Grid	748056.7237	3855994.579	217.82	1742	Grid	747471.4571	3855922.031	317.95
1653	Grid	748396.433	3854008.566	414.59	1698	Grid	747967.2439	3855857.259	233.52	1743	Grid	747510.8322	3855774.721	275.41
1654	Grid	748493.7622	3853975.54	408.74	1699	Grid	748006.6191	3855709.949	255.22	1744	Grid	747550.2074	3855627.411	271.8
1655	Grid	748591.0914	3853942.515	434.57	1700	Grid	748045.9943	3855562.639	278.3	1745	Grid	747589.5826	3855480.101	294.89
1656	Grid	748688.4205	3853909.489	448.97	1701	Grid	748085.3695	3855415.329	257.33	1746	Grid	747628.9578	3855332.792	340.59
1657	Grid	748785.7497	3853876.463	444.33	1702	Grid	748124.7446	3855268.02	247.86	1747	Grid	747668.333	3855185.482	302.03
1658	Grid	748883.0789	3853843.437	398.72	1703	Grid	748210.3128	3855155.993	246.9	1748	Grid	747707.7082	3855038.172	283.56
1659	Grid	748980.4081	3853810.412	367.18	1704	Grid	748342.074	3855079.249	280.81	1749	Grid	747812.9639	3854852.49	363.02
1660	Grid	748667.3461	3853819.923	423.07	1705	Grid	747957.5663	3856007.534	241.14	1750	Grid	747944.7251	3854775.747	365.51
1661	Grid	748839.9726	3855814.324	211.45	1706	Grid	747868.0865	3855870.213	232.06	1751	Grid	748076.4862	3854699.003	277.33
1662	Grid	748760.5029	3855753.624	201.98	1707	Grid	747907.4617	3855722.904	272.19	1752	Grid	747461.7795	3856072.306	288.87
1663	Grid	748750.8253	3855903.899	211.27	1708	Grid	747946.8369	3855575.594	304.84	1753	Grid	747372.2997	3855934.985	306.74
1664	Grid	748661.3455	3855766.578	207.46	1709	Grid	747986.2121	3855428.284	255.58	1754	Grid	747411.6749	3855787.675	295.92
1665	Grid	748766.6012	3855580.897	218.05	1710	Grid	748025.5873	3855280.974	237.2	1755	Grid	747451.0501	3855640.366	287.72

TABLE C-19: Receptors Locations and Elevations

Receptor		UTMs		ELEV (m)	Receptor		UTMs		ELEV (m)	Receptor		UTMs		ELEV (m)
#	Type	X (m)	Y (m)		#	Type	X (m)	Y (m)		#	Type	X (m)	Y (m)	
1756	Grid	747490.4252	3855493.056	302.26	1801	Grid	747758.6071	3854456.201	331.14	1846	Grid	747634.7629	3856293.106	197.99
1757	Grid	747529.8004	3855345.746	336.39	1802	Grid	747065.15	3856124.123	312.23	1847	Grid	747747.7889	3856601.806	188.15
1758	Grid	747569.1756	3855198.436	299.11	1803	Grid	746975.6702	3855986.803	311.51	1848	Grid	747597.3783	3856501.651	194.28
1759	Grid	747608.5508	3855051.126	308.62	1804	Grid	747015.0454	3855839.493	322.69	1849	Grid	747552.1787	3856358.536	204.55
1760	Grid	747647.926	3854903.816	292.84	1805	Grid	747054.4206	3855692.183	361.43	1850	Grid	747506.9791	3856215.421	224.82
1761	Grid	747733.4941	3854791.79	317.53	1806	Grid	747093.7958	3855544.873	333.18	1851	Grid	747659.1781	3856648.153	187.9
1762	Grid	747865.2553	3854715.046	335.64	1807	Grid	747133.1709	3855397.563	336.62	1852	Grid	747507.2609	3856543.228	195.85
1763	Grid	747997.0165	3854638.302	316.5	1808	Grid	747172.5461	3855250.254	341.93	1853	Grid	747459.0479	3856390.572	211.18
1764	Grid	747362.6221	3856085.26	258.67	1809	Grid	747211.9213	3855102.944	360.85	1854	Grid	747410.835	3856237.916	233.63
1765	Grid	747273.1423	3855947.94	300.25	1810	Grid	747251.2965	3854955.634	376.88	1855	Grid	747570.5673	3856694.501	187.98
1766	Grid	747312.5175	3855800.63	323.42	1811	Grid	747290.6717	3854808.324	376.19	1856	Grid	747420.3451	3856594.943	198.05
1767	Grid	747351.8927	3855653.32	300.86	1812	Grid	747330.0469	3854661.014	343.73	1857	Grid	747375.5221	3856453.021	213.75
1768	Grid	747391.2679	3855506.01	329.21	1813	Grid	747415.615	3854548.988	315.05	1858	Grid	747330.6992	3856311.098	247.36
1769	Grid	747430.6431	3855358.7	345.8	1814	Grid	747547.3762	3854472.244	317.82	1859	Grid	747481.9565	3856740.849	189.11
1770	Grid	747470.0182	3855211.39	298.61	1815	Grid	747679.1374	3854395.5	319.39	1860	Grid	747330.4159	3856637.117	199.91
1771	Grid	747509.3934	3855064.081	322.61	1816	Grid	746965.9926	3856137.078	302.27	1861	Grid	747282.9563	3856486.846	224.22
1772	Grid	747548.7686	3854916.771	302.63	1817	Grid	748860.5292	3855924.338	229.47	1862	Grid	747235.4968	3856336.575	275.86
1773	Grid	747654.0244	3854731.089	340.31	1818	Grid	748938.9292	3856074.228	235.85	1863	Grid	747393.3457	3856787.197	189.52
1774	Grid	747785.7855	3854654.345	340.63	1819	Grid	748811.1184	3856045.631	231.18	1864	Grid	747240.4868	3856679.29	204.42
1775	Grid	747917.5467	3854577.602	316.55	1820	Grid	748683.3076	3856017.034	206.87	1865	Grid	747190.3906	3856520.671	265.2
1776	Grid	747263.4647	3856098.215	277.73	1821	Grid	748761.7076	3856166.924	232.33	1866	Grid	747140.2943	3856362.052	255.71
1777	Grid	747173.985	3855960.894	338.73	1822	Grid	748594.6968	3856063.382	199.16	1867	Grid	747304.7349	3856833.545	189.93
1778	Grid	747213.3601	3855813.584	351.79	1823	Grid	748488.5084	3856054.074	204.35	1868	Grid	747153.4873	3856730.74	213.11
1779	Grid	747252.7353	3855666.274	322.72	1824	Grid	748545.286	3856184.674	206.03	1869	Grid	747106.6136	3856582.325	246.62
1780	Grid	747292.1105	3855518.965	363.85	1825	Grid	748396.3821	3856089.29	203.3	1870	Grid	747059.74	3856433.909	281.75
1781	Grid	747331.4857	3855371.655	362.18	1826	Grid	748456.6752	3856231.022	207.5	1871	Grid	747012.8663	3856285.493	317.46
1782	Grid	747370.8609	3855224.345	318.5	1827	Grid	748304.2558	3856124.507	202.17	1872	Grid	747216.1242	3856879.893	191.34
1783	Grid	747410.2361	3855077.035	354.68	1828	Grid	748368.0645	3856277.37	204.89	1873	Grid	748126.8324	3856096.437	208.96
1784	Grid	747449.6112	3854929.725	338.17	1829	Grid	748219.1605	3856181.986	201.18	1874	Grid	747626.1059	3856168.875	211.62
1785	Grid	747488.9864	3854782.415	344.73	1830	Grid	748279.4537	3856323.718	196.83	1875	Grid	748947.8993	3855980.946	231.27
1786	Grid	747574.5546	3854670.389	334.06	1831	Grid	748127.9131	3856219.986	201.49	1876	Grid	748949.791	3855880.964	222.07
1787	Grid	747706.3157	3854593.645	349.86	1832	Grid	748190.8429	3856370.066	195.12	1877	Grid	749033.6066	3855782.532	203.65
1788	Grid	747838.0769	3854516.901	334.08	1833	Grid	748041.9389	3856274.682	197.85	1878	Grid	748707.8023	3855676.349	211.46
1789	Grid	747164.3074	3856111.169	316.79	1834	Grid	747999.7526	3856141.108	207.29	1879	Grid	748514.5544	3856372.002	231.18
1790	Grid	747074.8276	3855973.848	324.82	1835	Grid	748102.2321	3856416.414	192.95	1880	Grid	748513.6194	3856471.119	220.94
1791	Grid	747114.2028	3855826.539	334.93	1836	Grid	747951.2188	3856314.351	196.2	1881	Grid	748414.5589	3856371.058	220.07
1792	Grid	747153.5779	3855679.229	363.44	1837	Grid	747904.8139	3856167.42	209.29	1882	Grid	748413.6239	3856470.176	210.98
1793	Grid	747192.9531	3855531.919	352.16	1838	Grid	748013.6213	3856462.762	192	1883	Grid	748313.6283	3856469.233	211.56
1794	Grid	747232.3283	3855384.609	352.84	1839	Grid	747860.4987	3856354.02	194.31	1884	Grid	748213.6328	3856468.289	207.7
1795	Grid	747271.7035	3855237.299	352.34	1840	Grid	747809.8751	3856193.731	207.65	1885	Grid	747716.46	3856166.22	230.13
1796	Grid	747311.0787	3855089.989	369.08	1841	Grid	747925.0105	3856509.11	191.04	1886	Grid	748456.3543	3855245.579	277.41
1797	Grid	747350.4539	3854942.68	354.12	1842	Grid	747774.3488	3856408.16	192.47	1887	Grid	747913.9571	3855062.864	288.77
1798	Grid	747389.829	3854795.37	342.45	1843	Grid	747728.647	3856263.455	201.42	1888	Grid	748197.3391	3854851.705	284.04
1799	Grid	747495.0848	3854609.688	320.15	1844	Grid	747836.3997	3856555.458	189.53	1889	Grid	747115.5517	3856259.678	315.28
1800	Grid	747626.846	3854532.944	339.33	1845	Grid	747683.9802	3856448.942	194.11	1890	Grid	748118.0004	3854783.805	272.12

TABLE C-19: Receptors Locations and Elevations

Receptor		UTMs		ELEV (m)	Receptor		UTMs		ELEV (m)	Receptor		UTMs		ELEV (m)
#	Type	X (m)	Y (m)		#	Type	X (m)	Y (m)		#	Type	X (m)	Y (m)	
1891	Grid	747012.7512	3856556.087	287.34	1936	Grid	748232.0847	3856064.658	208.51	1981	Grid	746884.1885	3855184.603	343.13
1892	Grid	746915.5606	3856257.792	298.19	1937	Grid	747829.0379	3856705.279	196.55	1982	Grid	746130.7368	3856599.371	248.91
1893	Grid	746914.6256	3856356.909	315.95	1938	Grid	747752.2127	3856509.141	190.11	1983	Grid	746061.1726	3856457.142	243.14
1894	Grid	746913.6906	3856456.027	289.17	1939	Grid	747267.7328	3856233.064	277.87	1984	Grid	746119.2185	3856323.998	248.46
1895	Grid	746912.7556	3856555.144	248.62	1940	Grid	747029.1809	3856690.153	256.2	1985	Grid	746177.2643	3856190.853	255.93
1896	Grid	746855.4499	3856066.75	291.47	1941	Grid	746929.1988	3856688.262	227.93	1986	Grid	746235.3102	3856057.708	264
1897	Grid	746933.3495	3855884.789	314.26	1942	Grid	746829.2166	3856686.371	252.62	1987	Grid	746293.3561	3855924.564	282.16
1898	Grid	746816.5001	3856157.731	278.94	1943	Grid	746729.2345	3856684.48	242.71	1988	Grid	746351.4019	3855791.419	305.54
1899	Grid	746815.5651	3856256.848	268.32	1944	Grid	746629.2524	3856682.59	239.46	1989	Grid	746409.4478	3855658.274	337.22
1900	Grid	746814.6301	3856355.966	276.81	1945	Grid	746530.6653	3856606.934	273.11	1990	Grid	746467.4937	3855525.129	338.76
1901	Grid	746813.6951	3856455.083	265.35	1946	Grid	746460.7192	3856465.582	300.52	1991	Grid	746525.5395	3855391.985	338.41
1902	Grid	746812.7601	3856554.201	271.02	1947	Grid	746518.0013	3856334.189	306.24	1992	Grid	746583.5854	3855258.84	344.67
1903	Grid	746754.8773	3856067.155	314.11	1948	Grid	746430.6832	3856605.043	289.42	1993	Grid	746680.1783	3855165.65	365.31
1904	Grid	746793.2501	3855977.522	324.4	1949	Grid	746360.8494	3856463.433	271.07	1994	Grid	746815.3183	3855112.414	367.43
1905	Grid	746831.6228	3855887.89	329.19	1950	Grid	746418.3561	3856331.525	307.41	1995	Grid	746950.4583	3855059.179	363.63
1906	Grid	746869.9956	3855798.257	336.44	1951	Grid	746475.8629	3856199.617	306.3	1996	Grid	746030.7547	3856597.48	236.61
1907	Grid	746908.3684	3855708.624	325.58	1952	Grid	746533.3696	3856067.709	303.95	1997	Grid	745961.2632	3856455.085	277.57
1908	Grid	746946.7411	3855618.992	323.24	1953	Grid	746590.8764	3855935.801	293.41	1998	Grid	746019.4546	3856321.606	269.12
1909	Grid	746985.1139	3855529.359	321.55	1954	Grid	746648.3831	3855803.893	290.74	1999	Grid	746077.6459	3856188.128	280.3
1910	Grid	747023.4867	3855439.727	323.98	1955	Grid	746705.8899	3855671.985	301.05	2000	Grid	746135.8373	3856054.65	284.17
1911	Grid	746716.5045	3856156.788	304.01	1956	Grid	746763.3966	3855540.077	316.49	2001	Grid	746194.0286	3855921.171	273.82
1912	Grid	746715.5695	3856255.905	277.91	1957	Grid	747088.673	3855302.687	337.82	2002	Grid	746252.2199	3855787.693	295.07
1913	Grid	746714.6345	3856355.023	268.01	1958	Grid	746330.701	3856603.152	295.64	2003	Grid	746310.4113	3855654.214	315.55
1914	Grid	746713.6995	3856454.14	252.6	1959	Grid	746260.9671	3856461.313	260.26	2004	Grid	746368.6026	3855520.736	315.08
1915	Grid	746712.7645	3856553.258	243.47	1960	Grid	746318.6735	3856328.947	295.19	2005	Grid	746426.794	3855387.258	319.61
1916	Grid	746654.3768	3856067.391	329.05	1961	Grid	746376.38	3856196.581	299.69	2006	Grid	746484.9853	3855253.779	338.75
1917	Grid	746692.2447	3855978.938	323.81	1962	Grid	746434.0864	3856064.215	298.11	2007	Grid	746610.916	3855093.616	353.96
1918	Grid	746730.1126	3855890.485	321.3	1963	Grid	746491.7928	3855931.849	282.9	2008	Grid	746746.3947	3855040.247	361.42
1919	Grid	746767.9804	3855802.031	312.42	1964	Grid	746549.4992	3855799.483	283.51	2009	Grid	746881.8734	3854986.878	378.89
1920	Grid	746805.8483	3855713.578	307.34	1965	Grid	746607.2056	3855667.117	312.67	2010	Grid	747017.3521	3854933.51	361.15
1921	Grid	746843.7162	3855625.125	308	1966	Grid	746664.9121	3855534.751	326.45	2011	Grid	745930.7725	3856595.589	243.48
1922	Grid	746881.584	3855536.672	313	1967	Grid	746722.6185	3855402.385	354.07	2012	Grid	747930.162	3856607.177	193.5
1923	Grid	746919.4519	3855448.218	316.5	1968	Grid	746818.6465	3855309.74	336.53	2013	Grid	747692.588	3856796.209	191.05
1924	Grid	746957.3198	3855359.765	328.15	1969	Grid	747759.0944	3854939.27	324.44	2014	Grid	747690.9809	3856888.529	195.32
1925	Grid	746995.1876	3855271.312	348.31	1970	Grid	746230.7189	3856601.261	273.75	2015	Grid	747689.3737	3856980.849	203.53
1926	Grid	747033.0555	3855182.859	362.72	1971	Grid	746161.0743	3856459.218	250.3	2016	Grid	747687.7666	3857073.169	214.78
1927	Grid	747070.9234	3855094.405	376.5	1972	Grid	746218.9594	3856326.442	262.67	2017	Grid	747686.1594	3857165.489	227.59
1928	Grid	747108.7912	3855005.952	384.34	1973	Grid	746276.8445	3856193.666	266.95	2018	Grid	747684.5523	3857257.809	221.2
1929	Grid	747146.6591	3854917.499	389.23	1974	Grid	746334.7296	3856060.89	268.15	2019	Grid	747682.9451	3857350.129	218.03
1930	Grid	747184.5269	3854829.045	366.07	1975	Grid	746392.6146	3855928.114	272.91	2020	Grid	747592.6032	3856794.469	185.59
1931	Grid	746616.509	3856155.844	323.46	1976	Grid	746450.4997	3855795.338	295.6	2021	Grid	747590.996	3856886.789	187.3
1932	Grid	746615.574	3856254.962	306.67	1977	Grid	746508.3848	3855662.562	308.74	2022	Grid	747589.3889	3856979.109	192.39
1933	Grid	746614.639	3856354.079	291.71	1978	Grid	746566.2699	3855529.786	347.38	2023	Grid	747587.7817	3857071.429	200.67
1934	Grid	746613.704	3856453.197	281.81	1979	Grid	746624.1549	3855397.011	352.57	2024	Grid	747586.1746	3857163.749	202.08
1935	Grid	746612.769	3856552.314	277.03	1980	Grid	746749.4228	3855237.691	350.26	2025	Grid	747584.5674	3857256.069	212.58

TABLE C-19: Receptors Locations and Elevations

Receptor		UTMs		ELEV (m)	Receptor		UTMs		ELEV (m)	Receptor		UTMs		ELEV (m)
#	Type	X (m)	Y (m)		#	Type	X (m)	Y (m)		#	Type	X (m)	Y (m)	
2026	Grid	747582.9603	3857348.389	239.22	2071	Grid	746789.5101	3856965.184	217.26	2116	Grid	746184.7795	3857231.701	260.76
2027	Grid	747491.0112	3856885.048	184.76	2072	Grid	746787.9029	3857057.504	222.83	2117	Grid	746183.1724	3857324.021	223.65
2028	Grid	747489.404	3856977.368	184.04	2073	Grid	746786.2958	3857149.824	214.39	2118	Grid	746092.8304	3856768.36	242.44
2029	Grid	747487.7969	3857069.688	190.07	2074	Grid	746784.6886	3857242.144	190.8	2119	Grid	746091.2233	3856860.68	256.8
2030	Grid	747486.1897	3857162.008	199.78	2075	Grid	746783.0815	3857334.464	181.3	2120	Grid	746089.6161	3856953	248.21
2031	Grid	747484.5826	3857254.328	209.61	2076	Grid	746692.7395	3856778.804	239.64	2121	Grid	746088.009	3857045.32	247.24
2032	Grid	747482.9754	3857346.648	211.76	2077	Grid	746691.1324	3856871.124	258.62	2122	Grid	746086.4018	3857137.64	269.35
2033	Grid	747391.0263	3856883.308	186.48	2078	Grid	746689.5252	3856963.444	243.74	2123	Grid	746084.7947	3857229.96	270.29
2034	Grid	747389.4192	3856975.628	183.56	2079	Grid	746687.9181	3857055.764	251.31	2124	Grid	746083.1875	3857322.28	260.87
2035	Grid	747387.812	3857067.948	185.66	2080	Grid	746686.3109	3857148.084	225.77	2125	Grid	745992.8455	3856766.62	232.5
2036	Grid	747386.2049	3857160.268	191.39	2081	Grid	746684.7038	3857240.404	227.31	2126	Grid	745991.2384	3856858.94	246.05
2037	Grid	747384.5977	3857252.588	193.4	2082	Grid	746683.0966	3857332.724	204.97	2127	Grid	745989.6313	3856951.26	230.99
2038	Grid	747382.9906	3857344.908	194.97	2083	Grid	746592.7546	3856777.063	230.72	2128	Grid	745988.0241	3857043.58	234.94
2039	Grid	747289.4343	3856973.887	185.28	2084	Grid	746591.1475	3856869.383	224.03	2129	Grid	745986.417	3857135.9	253.16
2040	Grid	747287.8272	3857066.207	182.2	2085	Grid	746589.5404	3856961.703	235.68	2130	Grid	745984.8098	3857228.22	237.62
2041	Grid	747286.22	3857158.527	184.94	2086	Grid	746587.9332	3857054.023	228.73	2131	Grid	745983.2027	3857320.54	258.28
2042	Grid	747284.6129	3857250.847	188.74	2087	Grid	746586.3261	3857146.343	239.13	2132	Grid	745892.8607	3856764.879	228.28
2043	Grid	747283.0057	3857343.167	191.34	2088	Grid	746584.7189	3857238.663	235.07	2133	Grid	745891.2535	3856857.199	225.14
2044	Grid	747189.4495	3856972.147	186.99	2089	Grid	746583.1118	3857330.983	231.83	2134	Grid	745889.6464	3856949.519	221.14
2045	Grid	747187.8423	3857064.467	182.38	2090	Grid	746492.7698	3856775.323	257.94	2135	Grid	745888.0393	3857041.839	224.25
2046	Grid	747186.2352	3857156.787	184.27	2091	Grid	746491.1627	3856867.643	236.29	2136	Grid	745886.4321	3857134.159	225.98
2047	Grid	747184.628	3857249.107	185.85	2092	Grid	746489.5555	3856959.963	218.26	2137	Grid	745884.825	3857226.479	219.71
2048	Grid	747183.0209	3857341.427	186.31	2093	Grid	746487.9484	3857052.283	216.14	2138	Grid	745883.2178	3857318.799	234.92
2049	Grid	747091.0718	3856878.086	199.43	2094	Grid	746486.3412	3857144.603	208.66	2139	Grid	745830.1308	3856588.487	238.76
2050	Grid	747089.4646	3856970.406	189.41	2095	Grid	746484.7341	3857236.923	205.26	2140	Grid	746044.0179	3856094.497	300.85
2051	Grid	747087.8575	3857062.726	181.96	2096	Grid	746483.1269	3857329.243	206.89	2141	Grid	746222.2572	3855682.839	294.04
2052	Grid	747086.2503	3857155.046	183.46	2097	Grid	746392.7849	3856773.582	235.52	2142	Grid	746329.2008	3855435.844	326.9
2053	Grid	747084.6432	3857247.366	183.01	2098	Grid	746391.1778	3856865.902	230.89	2143	Grid	745792.8758	3856763.138	233.07
2054	Grid	747083.036	3857339.686	181.98	2099	Grid	746389.5707	3856958.222	228.16	2144	Grid	745791.2687	3856855.458	227.24
2055	Grid	746992.6941	3856784.025	233.11	2100	Grid	746387.9635	3857050.542	218.35	2145	Grid	745789.6616	3856947.778	219.1
2056	Grid	746991.0869	3856876.345	206.81	2101	Grid	746386.3564	3857142.862	212.92	2146	Grid	745788.0544	3857040.098	217
2057	Grid	746989.4798	3856968.665	194.15	2102	Grid	746384.7492	3857235.182	205.66	2147	Grid	745786.4473	3857132.418	216.42
2058	Grid	746987.8726	3857060.985	185.13	2103	Grid	746383.1421	3857327.502	203.31	2148	Grid	745784.8401	3857224.738	212.99
2059	Grid	746986.2655	3857153.305	183.03	2104	Grid	746292.8001	3856771.841	265.6	2149	Grid	745783.233	3857317.058	211.24
2060	Grid	746984.6583	3857245.625	180.12	2105	Grid	746291.193	3856864.161	265.15	2150	Grid	747781.5497	3857251.88	254.8
2061	Grid	746983.0512	3857337.945	178.64	2106	Grid	746289.5858	3856956.481	244	2151	Grid	747780.1694	3857151.889	234.16
2062	Grid	746892.7092	3856782.285	222.58	2107	Grid	746287.9787	3857048.801	228.94	2152	Grid	747778.7891	3857051.899	213.75
2063	Grid	746891.1021	3856874.605	217.07	2108	Grid	746286.3715	3857141.121	232.35	2153	Grid	747777.4089	3856951.908	203.82
2064	Grid	746889.4949	3856966.925	223.08	2109	Grid	746284.7644	3857233.441	234.25	2154	Grid	747776.0286	3856851.918	199.92
2065	Grid	746887.8878	3857059.245	185.46	2110	Grid	746283.1572	3857325.761	226.09	2155	Grid	747257.0336	3857455.862	193.58
2066	Grid	746886.2806	3857151.565	182.59	2111	Grid	746192.8152	3856770.101	252.93	2156	Grid	747255.6373	3857555.397	203.06
2067	Grid	746884.6735	3857243.885	176.89	2112	Grid	746191.2081	3856862.421	268.26	2157	Grid	747254.2411	3857654.932	203.59
2068	Grid	746883.0663	3857336.205	174.68	2113	Grid	746189.601	3856954.741	272.91	2158	Grid	747252.8448	3857754.467	222.7
2069	Grid	746792.7243	3856780.544	256.93	2114	Grid	746187.9938	3857047.061	270.57	2159	Grid	747251.4486	3857854.002	231.83
2070	Grid	746791.1172	3856872.864	246.54	2115	Grid	746186.3867	3857139.381	268.03	2160	Grid	747250.0523	3857953.537	212.2

TABLE C-19: Receptors Locations and Elevations

Receptor		UTMs		ELEV (m)	Receptor		UTMs		ELEV (m)	Receptor		UTMs		ELEV (m)
#	Type	X (m)	Y (m)		#	Type	X (m)	Y (m)		#	Type	X (m)	Y (m)	
2161	Grid	747248.6561	3858053.072	201.27	2206	Grid	746952.8743	3857750.259	183.48	2251	Grid	746657.0926	3857447.447	195.67
2162	Grid	747247.2598	3858152.607	216.97	2207	Grid	746951.4781	3857849.794	189.5	2252	Grid	746655.6964	3857546.982	185.02
2163	Grid	747245.8636	3858252.142	226.01	2208	Grid	746950.0818	3857949.329	183.91	2253	Grid	746654.3001	3857646.517	178.82
2164	Grid	747244.4673	3858351.677	208.56	2209	Grid	746948.6856	3858048.864	205.98	2254	Grid	746652.9039	3857746.052	177.04
2165	Grid	747243.0711	3858451.212	228.94	2210	Grid	746947.2893	3858148.399	202.94	2255	Grid	746651.5076	3857845.587	175.41
2166	Grid	747241.6748	3858550.747	247	2211	Grid	746945.8931	3858247.934	182.59	2256	Grid	746650.1114	3857945.122	172.7
2167	Grid	747240.2786	3858650.282	250.26	2212	Grid	746944.4968	3858347.469	194.16	2257	Grid	746648.7151	3858044.657	170.89
2168	Grid	747238.8823	3858749.817	240.69	2213	Grid	746943.1006	3858447.004	195.48	2258	Grid	746647.3189	3858144.192	166.15
2169	Grid	747237.4861	3858849.352	253.52	2214	Grid	746941.7043	3858546.539	205.01	2259	Grid	746645.9226	3858243.727	164.58
2170	Grid	747236.0898	3858948.887	243.28	2215	Grid	746940.3081	3858646.074	196.28	2260	Grid	746644.5264	3858343.262	165.01
2171	Grid	747157.0434	3857454.46	188.29	2216	Grid	746938.9118	3858745.609	208.09	2261	Grid	746643.1301	3858442.797	166.66
2172	Grid	747155.6472	3857553.995	191.95	2217	Grid	746937.5156	3858845.144	233.09	2262	Grid	746641.7339	3858542.332	170.97
2173	Grid	747154.2509	3857653.53	206.17	2218	Grid	746936.1193	3858944.679	218.32	2263	Grid	746640.3376	3858641.867	181.68
2174	Grid	747152.8547	3857753.065	210.72	2219	Grid	746857.0729	3857450.252	174.44	2264	Grid	746638.9414	3858741.402	171.53
2175	Grid	747151.4584	3857852.6	221.2	2220	Grid	746855.6767	3857549.787	175.4	2265	Grid	746637.5451	3858840.937	186.93
2176	Grid	747150.0622	3857952.135	201.13	2221	Grid	746854.2804	3857649.322	174.77	2266	Grid	746636.1489	3858940.472	192.97
2177	Grid	747148.6659	3858051.67	200.86	2222	Grid	746852.8842	3857748.857	174.13	2267	Grid	746557.1024	3857446.044	228.46
2178	Grid	747147.2697	3858151.205	220.44	2223	Grid	746851.4879	3857848.392	176.91	2268	Grid	746555.7062	3857545.579	212.9
2179	Grid	747145.8734	3858250.74	213.18	2224	Grid	746850.0917	3857947.927	180.92	2269	Grid	746554.3099	3857645.114	187.17
2180	Grid	747144.4772	3858350.275	198.43	2225	Grid	746848.6954	3858047.462	186.09	2270	Grid	746552.9137	3857744.649	182.59
2181	Grid	747143.0809	3858449.81	211.6	2226	Grid	746847.2992	3858146.997	178.43	2271	Grid	746551.5174	3857844.184	179.64
2182	Grid	747141.6847	3858549.345	217.67	2227	Grid	746845.9029	3858246.532	175.36	2272	Grid	746550.1212	3857943.719	178.01
2183	Grid	747140.2884	3858648.88	243.32	2228	Grid	746844.5067	3858346.067	186.55	2273	Grid	746548.7249	3858043.254	174.8
2184	Grid	747138.8922	3858748.415	218.83	2229	Grid	746843.1104	3858445.602	182.57	2274	Grid	746547.3287	3858142.789	171.84
2185	Grid	747137.4959	3858847.95	231.38	2230	Grid	746841.7142	3858545.137	184.04	2275	Grid	746545.9324	3858242.324	168.52
2186	Grid	747136.0997	3858947.485	254.88	2231	Grid	746840.3179	3858644.672	208.82	2276	Grid	746544.5362	3858341.859	164.99
2187	Grid	747057.0533	3857453.057	183.54	2232	Grid	746838.9217	3858744.207	206.15	2277	Grid	746543.1399	3858441.394	162.31
2188	Grid	747055.657	3857552.592	182.54	2233	Grid	746837.5254	3858843.742	207.11	2278	Grid	746541.7437	3858540.929	163.93
2189	Grid	747054.2608	3857652.127	191.02	2234	Grid	746836.1292	3858943.277	227.11	2279	Grid	746540.3474	3858640.464	166.6
2190	Grid	747052.8645	3857751.662	195.48	2235	Grid	746757.0828	3857448.849	176.56	2280	Grid	746538.9512	3858739.999	167.05
2191	Grid	747051.4683	3857851.197	206.62	2236	Grid	746755.6865	3857548.384	172.5	2281	Grid	746537.5549	3858839.534	168.59
2192	Grid	747050.072	3857950.732	189.34	2237	Grid	746754.2903	3857647.919	171.16	2282	Grid	746536.1587	3858939.069	167.6
2193	Grid	747048.6758	3858050.267	201.03	2238	Grid	746752.894	3857747.454	171.86	2283	Grid	746457.1123	3857444.641	194.04
2194	Grid	747047.2795	3858149.802	220.65	2239	Grid	746751.4978	3857846.989	171.11	2284	Grid	746455.716	3857544.176	193.38
2195	Grid	747045.8833	3858249.337	197.12	2240	Grid	746750.1015	3857946.524	170.44	2285	Grid	746454.3198	3857643.711	191.68
2196	Grid	747044.487	3858348.872	192.88	2241	Grid	746748.7053	3858046.059	171.37	2286	Grid	746452.9235	3857743.246	204.12
2197	Grid	747043.0908	3858448.407	212.32	2242	Grid	746747.309	3858145.594	168.69	2287	Grid	746451.5273	3857842.781	200.42
2198	Grid	747041.6945	3858547.942	219.52	2243	Grid	746745.9128	3858245.129	168.3	2288	Grid	746450.131	3857942.316	183.27
2199	Grid	747040.2983	3858647.477	231.76	2244	Grid	746744.5165	3858344.664	169.33	2289	Grid	746448.7348	3858041.851	181.19
2200	Grid	747038.902	3858747.012	206.25	2245	Grid	746743.1203	3858444.199	170.18	2290	Grid	746447.3385	3858141.386	176.06
2201	Grid	747037.5058	3858846.547	240.63	2246	Grid	746741.724	3858543.734	192.84	2291	Grid	746445.9423	3858240.921	171.48
2202	Grid	747036.1095	3858946.082	234.77	2247	Grid	746740.3278	3858643.269	201.59	2292	Grid	746444.546	3858340.456	167.37
2203	Grid	746957.0631	3857451.654	178.55	2248	Grid	746738.9315	3858742.804	187.11	2293	Grid	746443.1498	3858439.991	164.35
2204	Grid	746955.6668	3857551.189	178.73	2249	Grid	746737.5353	3858842.339	186.26	2294	Grid	746441.7535	3858539.526	161.83
2205	Grid	746954.2706	3857650.724	180.63	2250	Grid	746736.139	3858941.874	207.4	2295	Grid	746440.3573	3858639.061	161.09

TABLE C-19: Receptors Locations and Elevations

Receptor		UTMs		ELEV (m)	Receptor		UTMs		ELEV (m)	Receptor		UTMs		ELEV (m)
#	Type	X (m)	Y (m)		#	Type	X (m)	Y (m)		#	Type	X (m)	Y (m)	
2296	Grid	746438.961	3858738.596	162.12	2341	Grid	746143.1793	3858435.783	199.27	2386	Grid	745847.3976	3858132.97	215.54
2297	Grid	746437.5648	3858838.131	162.68	2342	Grid	746141.783	3858535.318	171.65	2387	Grid	745846.0013	3858232.505	208.01
2298	Grid	746436.1685	3858937.666	161.57	2343	Grid	746140.3868	3858634.853	168.11	2388	Grid	745844.6051	3858332.04	218.43
2299	Grid	746357.1221	3857443.239	206.35	2344	Grid	746138.9905	3858734.388	180.07	2389	Grid	745843.2088	3858431.575	203.82
2300	Grid	746355.7259	3857542.774	194.01	2345	Grid	746137.5943	3858833.923	192.44	2390	Grid	745841.8126	3858531.11	190.39
2301	Grid	746354.3296	3857642.309	198.53	2346	Grid	746136.198	3858933.458	198.72	2391	Grid	745840.4163	3858630.645	179.63
2302	Grid	746352.9334	3857741.844	213.55	2347	Grid	746057.1516	3857439.031	258.44	2392	Grid	745839.0201	3858730.18	169
2303	Grid	746351.5371	3857841.379	215.51	2348	Grid	746055.7554	3857538.566	243.77	2393	Grid	745837.6238	3858829.715	180
2304	Grid	746350.1409	3857940.914	206.78	2349	Grid	746054.3591	3857638.101	233.49	2394	Grid	745836.2276	3858929.25	187.36
2305	Grid	746348.7446	3858040.449	197.88	2350	Grid	746052.9629	3857737.636	241	2395	Grid	745757.1811	3857434.823	205.2
2306	Grid	746347.3484	3858139.984	180.04	2351	Grid	746051.5666	3857837.171	208.43	2396	Grid	745755.7849	3857534.358	203.88
2307	Grid	746345.9521	3858239.519	177.04	2352	Grid	746050.1704	3857936.706	193.67	2397	Grid	745754.3886	3857633.893	199.2
2308	Grid	746344.5559	3858339.054	174.45	2353	Grid	746048.7741	3858036.241	182.9	2398	Grid	745752.9924	3857733.428	198.58
2309	Grid	746343.1596	3858438.589	169.48	2354	Grid	746047.3779	3858135.776	193.71	2399	Grid	745751.5961	3857832.963	205.28
2310	Grid	746341.7634	3858538.124	165.21	2355	Grid	746045.9816	3858235.311	192.85	2400	Grid	745750.1999	3857932.498	210.97
2311	Grid	746340.3671	3858637.659	161.94	2356	Grid	746044.5854	3858334.846	204.08	2401	Grid	745748.8036	3858032.033	218.48
2312	Grid	746338.9709	3858737.194	159.69	2357	Grid	746043.1891	3858434.381	208.75	2402	Grid	745747.4074	3858131.568	221.57
2313	Grid	746337.5746	3858836.729	158.13	2358	Grid	746041.7929	3858533.916	183	2403	Grid	745746.0111	3858231.103	217.99
2314	Grid	746336.1784	3858936.264	158.14	2359	Grid	746040.3966	3858633.451	168.23	2404	Grid	745744.6149	3858330.638	215.56
2315	Grid	746257.132	3857441.836	211.04	2360	Grid	746039.0004	3858732.986	172.68	2405	Grid	745743.2186	3858430.173	211.41
2316	Grid	746255.7357	3857541.371	202.98	2361	Grid	746037.6041	3858832.521	183.54	2406	Grid	745741.8224	3858529.708	207.1
2317	Grid	746254.3395	3857640.906	213.51	2362	Grid	746036.2079	3858932.056	207.05	2407	Grid	745740.4261	3858629.243	184.51
2318	Grid	746252.9432	3857740.441	217.85	2363	Grid	745957.1615	3857437.628	249.57	2408	Grid	745739.0299	3858728.778	170.1
2319	Grid	746251.547	3857839.976	228.99	2364	Grid	745955.7652	3857537.163	244.71	2409	Grid	745737.6336	3858828.313	177.94
2320	Grid	746250.1507	3857939.511	208.07	2365	Grid	745954.369	3857636.698	215.97	2410	Grid	745736.2374	3858927.848	184.59
2321	Grid	746248.7545	3858039.046	199.11	2366	Grid	745952.9727	3857736.233	215.07	2411	Grid	745658.5872	3857333.885	221.9
2322	Grid	746247.3582	3858138.581	180.07	2367	Grid	745951.5765	3857835.768	193.91	2412	Grid	745657.191	3857433.42	215.16
2323	Grid	746245.962	3858238.116	181.06	2368	Grid	745950.1802	3857935.303	190.05	2413	Grid	745655.7947	3857532.955	212.13
2324	Grid	746244.5657	3858337.651	195.51	2369	Grid	745948.784	3858034.838	196.91	2414	Grid	745654.3985	3857632.49	204.98
2325	Grid	746243.1695	3858437.186	178.4	2370	Grid	745947.3877	3858134.373	196.4	2415	Grid	745653.0022	3857732.025	213.43
2326	Grid	746241.7732	3858536.721	169.56	2371	Grid	745945.9915	3858233.908	212.1	2416	Grid	745651.606	3857831.56	221.22
2327	Grid	746240.377	3858636.256	166.29	2372	Grid	745944.5952	3858333.443	211.9	2417	Grid	745650.2097	3857931.095	221.52
2328	Grid	746238.9807	3858735.791	171.28	2373	Grid	745943.199	3858432.978	208.82	2418	Grid	745648.8135	3858030.63	219.65
2329	Grid	746237.5845	3858835.326	168.22	2374	Grid	745941.8027	3858532.513	190.58	2419	Grid	745647.4172	3858130.165	222.95
2330	Grid	746236.1882	3858934.861	166.89	2375	Grid	745940.4065	3858632.048	173.14	2420	Grid	745646.021	3858229.7	209.9
2331	Grid	746157.1418	3857440.433	229.48	2376	Grid	745939.0102	3858731.583	169	2421	Grid	745644.6247	3858329.235	206.64
2332	Grid	746155.7455	3857539.968	217.92	2377	Grid	745937.614	3858831.118	182.95	2422	Grid	745643.2285	3858428.77	209.97
2333	Grid	746154.3493	3857639.503	238.96	2378	Grid	745936.2177	3858930.653	193.31	2423	Grid	745641.8322	3858528.305	207.65
2334	Grid	746152.953	3857739.038	244.79	2379	Grid	745857.1713	3857436.225	220.28	2424	Grid	745640.436	3858627.84	193.52
2335	Grid	746151.5568	3857838.573	230.27	2380	Grid	745855.7751	3857535.76	218.19	2425	Grid	745639.0397	3858727.375	172.82
2336	Grid	746150.1605	3857938.108	213.01	2381	Grid	745854.3788	3857635.295	204.86	2426	Grid	745637.6435	3858826.91	176.69
2337	Grid	746148.7643	3858037.643	182.2	2382	Grid	745852.9826	3857734.83	195.01	2427	Grid	745636.2472	3858926.445	181.85
2338	Grid	746147.368	3858137.178	180.55	2383	Grid	745851.5863	3857834.365	194.15	2428	Grid	745596.2523	3857243.362	227.43
2339	Grid	746145.9718	3858236.713	182.59	2384	Grid	745850.1901	3857933.9	199.31	2429	Grid	745633.9075	3857154.242	229.04
2340	Grid	746144.5755	3858336.248	193.32	2385	Grid	745848.7938	3858033.435	208.04	2430	Grid	745671.5627	3857065.121	218.13

TABLE C-19: Receptors Locations and Elevations

Receptor		UTMs		ELEV (m)	Receptor		UTMs		ELEV (m)	Receptor		UTMs		ELEV (m)
#	Type	X (m)	Y (m)		#	Type	X (m)	Y (m)		#	Type	X (m)	Y (m)	
2431	Grid	745558.5971	3857332.483	239.59	2476	Grid	745431.8352	3857156.387	251.95	2521	Grid	748482.528	3859065.801	210.2
2432	Grid	745557.2008	3857432.018	227.44	2477	Grid	745468.4445	3857069.743	250.41	2522	Grid	748578.178	3859067.094	220.68
2433	Grid	745555.8046	3857531.553	213.31	2478	Grid	745505.0537	3856983.098	231.46	2523	Grid	748673.828	3859068.388	232.2
2434	Grid	745554.4083	3857631.088	208.67	2479	Grid	745541.6629	3856896.453	237.14	2524	Grid	748769.478	3859069.681	223.92
2435	Grid	745553.0121	3857730.623	214.46	2480	Grid	745578.2722	3856809.808	254.79	2525	Grid	748865.128	3859070.974	225.4
2436	Grid	745551.6158	3857830.158	232.77	2481	Grid	745614.8814	3856723.163	265.43	2526	Grid	748960.778	3859072.268	197.25
2437	Grid	745550.2196	3857929.693	233.73	2482	Grid	745651.4906	3856636.518	254.21	2527	Grid	749056.428	3859073.561	192.63
2438	Grid	745548.8233	3858029.228	232.6	2483	Grid	745688.0999	3856549.873	252.73	2528	Grid	749152.078	3859074.854	205.85
2439	Grid	745547.4271	3858128.763	230.15	2484	Grid	745724.7091	3856463.228	250.36	2529	Grid	749247.728	3859076.148	229.33
2440	Grid	745546.0308	3858228.298	216.61	2485	Grid	745761.3183	3856376.583	250.54	2530	Grid	747263.0501	3859120.011	232.98
2441	Grid	745544.6346	3858327.833	200.54	2486	Grid	745797.9276	3856289.938	254.77	2531	Grid	747429.0259	3859151.565	204.48
2442	Grid	745543.2383	3858427.368	200.6	2487	Grid	745834.5368	3856203.293	255.38	2532	Grid	747524.6759	3859152.858	195.25
2443	Grid	745541.8421	3858526.903	193.99	2488	Grid	745871.146	3856116.648	259.49	2533	Grid	747620.3259	3859154.152	192.17
2444	Grid	745540.4458	3858626.438	182.91	2489	Grid	745907.7553	3856030.003	266.08	2534	Grid	747715.9759	3859155.445	182.1
2445	Grid	745539.0496	3858725.973	178.21	2490	Grid	746031.0176	3855906.769	311.91	2535	Grid	747811.6259	3859156.738	197.21
2446	Grid	745537.6533	3858825.508	180.8	2491	Grid	746117.6707	3855870.179	303.65	2536	Grid	747907.2759	3859158.032	214.61
2447	Grid	745536.2571	3858925.043	190.58	2492	Grid	745358.6167	3857329.677	224.65	2537	Grid	748002.9259	3859159.325	185.07
2448	Grid	745495.7043	3857243.28	252.63	2493	Grid	745357.2205	3857429.212	237.07	2538	Grid	748098.5759	3859160.618	184.7
2449	Grid	745532.8016	3857155.48	240.81	2494	Grid	745355.8242	3857528.747	233.53	2539	Grid	748194.2259	3859161.912	194.62
2450	Grid	745569.899	3857067.679	228.61	2495	Grid	745354.428	3857628.282	224.06	2540	Grid	748289.8759	3859163.205	210.88
2451	Grid	745606.9963	3856979.879	228.57	2496	Grid	745353.0317	3857727.817	239.84	2541	Grid	748385.5259	3859164.498	210.51
2452	Grid	745644.0937	3856892.079	244.33	2497	Grid	745351.6355	3857827.352	246.09	2542	Grid	748481.1759	3859165.792	220.57
2453	Grid	745681.1911	3856804.279	237.93	2498	Grid	745350.2392	3857926.887	246.88	2543	Grid	748576.8259	3859167.085	234.13
2454	Grid	745829.5805	3856453.078	244.76	2499	Grid	745348.843	3858026.422	237.54	2544	Grid	748672.4759	3859168.378	233.04
2455	Grid	745866.6779	3856365.278	260.18	2500	Grid	745347.4467	3858125.957	226.01	2545	Grid	748768.1259	3859169.672	210.77
2456	Grid	745903.7752	3856277.478	267.97	2501	Grid	745346.0505	3858225.492	211.93	2546	Grid	748863.7759	3859170.965	200.26
2457	Grid	745940.8726	3856189.677	273.31	2502	Grid	745344.6542	3858325.027	194.05	2547	Grid	748959.4259	3859172.258	192.46
2458	Grid	745458.6069	3857331.08	232.2	2503	Grid	745343.258	3858424.562	194.53	2548	Grid	749055.0759	3859173.552	192.5
2459	Grid	745457.2107	3857430.615	217.3	2504	Grid	745341.8617	3858524.097	198.19	2549	Grid	749150.7259	3859174.845	221.91
2460	Grid	745455.8144	3857530.15	217.53	2505	Grid	745340.4655	3858623.632	200.16	2550	Grid	749246.3759	3859176.138	238.91
2461	Grid	745454.4182	3857629.685	215.62	2506	Grid	745339.0692	3858723.167	193.13	2551	Grid	747261.6981	3859220.002	230.58
2462	Grid	745453.0219	3857729.22	225.92	2507	Grid	745337.673	3858822.702	184.39	2552	Grid	747092.7341	3859088.347	205.45
2463	Grid	745451.6257	3857828.755	231.38	2508	Grid	745336.2767	3858922.237	185.23	2553	Grid	747427.6739	3859251.556	225.39
2464	Grid	745450.2294	3857928.29	244.4	2509	Grid	747334.728	3859050.281	211.16	2554	Grid	747523.3239	3859252.849	208.16
2465	Grid	745448.8332	3858027.825	242.18	2510	Grid	747430.378	3859051.574	212.11	2555	Grid	747618.9739	3859254.143	216.67
2466	Grid	745447.4369	3858127.36	228.5	2511	Grid	747526.028	3859052.868	210.98	2556	Grid	747714.6239	3859255.436	194.87
2467	Grid	745446.0407	3858226.895	214.55	2512	Grid	747621.678	3859054.161	213.99	2557	Grid	747810.2739	3859256.729	182.89
2468	Grid	745444.6444	3858326.43	198.2	2513	Grid	747717.328	3859055.454	193.55	2558	Grid	747905.9239	3859258.023	191.32
2469	Grid	745443.2482	3858425.965	187.23	2514	Grid	747812.978	3859056.748	213.18	2559	Grid	748001.5739	3859259.316	181
2470	Grid	745441.8519	3858525.5	184.54	2515	Grid	747908.628	3859058.041	220.78	2560	Grid	748097.2239	3859260.609	190.77
2471	Grid	745440.4557	3858625.035	185.23	2516	Grid	748004.278	3859059.334	194.06	2561	Grid	748192.8739	3859261.903	208.15
2472	Grid	745439.0594	3858724.57	184.29	2517	Grid	748099.928	3859060.628	211.88	2562	Grid	748288.5239	3859263.196	226.7
2473	Grid	745437.6632	3858824.105	181.07	2518	Grid	748195.578	3859061.921	193.09	2563	Grid	748384.1739	3859264.489	223.58
2474	Grid	745436.2669	3858923.64	193.66	2519	Grid	748291.228	3859063.214	194.6	2564	Grid	748479.8239	3859265.783	217.17
2475	Grid	745395.226	3857243.032	242.21	2520	Grid	748386.878	3859064.508	196.03	2565	Grid	748575.4739	3859267.076	228.74

TABLE C-19: Receptors Locations and Elevations

Receptor		UTMs		ELEV (m)	Receptor		UTMs		ELEV (m)	Receptor		UTMs		ELEV (m)
#	Type	X (m)	Y (m)		#	Type	X (m)	Y (m)		#	Type	X (m)	Y (m)	
2566	Grid	748671.1239	3859268.369	231.42	2611	Grid	748477.1199	3859465.764	229.04	2656	Grid	747996.1658	3859659.279	221.82
2567	Grid	748766.7739	3859269.663	218.66	2612	Grid	748572.7699	3859467.058	226.77	2657	Grid	748091.8158	3859660.573	222
2568	Grid	748862.4239	3859270.956	218.52	2613	Grid	748668.4199	3859468.351	226.75	2658	Grid	748187.4658	3859661.866	222
2569	Grid	748958.0739	3859272.249	188.68	2614	Grid	748764.0699	3859469.644	224.42	2659	Grid	748283.1158	3859663.159	222.97
2570	Grid	749053.7239	3859273.543	192.94	2615	Grid	748859.7199	3859470.938	216.27	2660	Grid	748378.7658	3859664.453	222.78
2571	Grid	749149.3739	3859274.836	224.99	2616	Grid	748955.3699	3859472.231	186.1	2661	Grid	748474.4158	3859665.746	217.69
2572	Grid	749245.0239	3859276.129	235.9	2617	Grid	749051.0199	3859473.524	192.33	2662	Grid	748570.0658	3859667.039	211.32
2573	Grid	747260.346	3859319.993	227.46	2618	Grid	749146.6699	3859474.818	207.75	2663	Grid	748665.7158	3859668.333	219.22
2574	Grid	747119.6943	3859259.471	212.17	2619	Grid	747243.5768	3859513.922	207.23	2664	Grid	748761.3658	3859669.626	222
2575	Grid	747021.0562	3859158.078	193.97	2620	Grid	747159.1858	3859477.609	178.16	2665	Grid	748857.0158	3859670.919	215.98
2576	Grid	747426.3219	3859351.547	231.92	2621	Grid	747074.7947	3859441.296	171.11	2666	Grid	748952.6658	3859672.213	181.75
2577	Grid	747521.9719	3859352.84	230.8	2622	Grid	746990.4037	3859404.983	189.02	2667	Grid	747244.8914	3859715.633	217.01
2578	Grid	747617.6219	3859354.133	230.5	2623	Grid	746872.0379	3859283.311	222.17	2668	Grid	747084.1465	3859646.466	181.85
2579	Grid	747713.2719	3859355.427	210.89	2624	Grid	746838.0632	3859197.952	219.9	2669	Grid	746923.4017	3859577.298	155.98
2580	Grid	747808.9219	3859356.72	194.61	2625	Grid	746804.0885	3859112.593	202.45	2670	Grid	746730.3	3859426.836	155.1
2581	Grid	747904.5719	3859358.013	180.05	2626	Grid	746770.1137	3859027.233	192.8	2671	Grid	746665.5862	3859264.247	171.28
2582	Grid	748000.2219	3859359.307	187.37	2627	Grid	747327.9678	3859550.235	227.18	2672	Grid	746600.8725	3859101.658	170.21
2583	Grid	748095.8719	3859360.6	210.52	2628	Grid	747423.6178	3859551.528	224.21	2673	Grid	747420.9138	3859751.51	190.41
2584	Grid	748191.5219	3859361.893	220.6	2629	Grid	747519.2678	3859552.822	200.33	2674	Grid	747516.5638	3859752.804	184.37
2585	Grid	748287.1719	3859363.187	233.89	2630	Grid	747614.9178	3859554.115	212.74	2675	Grid	747612.2138	3859754.097	176.11
2586	Grid	748382.8219	3859364.48	232.75	2631	Grid	747710.5678	3859555.408	181.52	2676	Grid	747707.8638	3859755.39	176.03
2587	Grid	748478.4719	3859365.773	228.72	2632	Grid	747806.2178	3859556.702	172.08	2677	Grid	747803.5138	3859756.684	198.79
2588	Grid	748574.1219	3859367.067	232.62	2633	Grid	747901.8678	3859557.995	202.6	2678	Grid	747899.1638	3859757.977	220.48
2589	Grid	748669.7719	3859368.36	232.11	2634	Grid	747997.5178	3859559.288	216.17	2679	Grid	747994.8138	3859759.27	221.77
2590	Grid	748765.4219	3859369.653	225.14	2635	Grid	748093.1678	3859560.582	206.54	2680	Grid	748090.4638	3859760.564	220.17
2591	Grid	748861.0719	3859370.947	217.29	2636	Grid	748188.8178	3859561.875	215.59	2681	Grid	748186.1138	3859761.857	217.86
2592	Grid	748956.7219	3859372.24	185.81	2637	Grid	748284.4678	3859563.168	225.01	2682	Grid	748281.7638	3859763.15	220.93
2593	Grid	749052.3719	3859373.533	198.69	2638	Grid	748380.1178	3859564.462	225.26	2683	Grid	748377.4138	3859764.444	219.86
2594	Grid	749148.0219	3859374.827	225.72	2639	Grid	748475.7678	3859565.755	220.49	2684	Grid	748473.0638	3859765.737	207.17
2595	Grid	749243.6719	3859376.12	219.08	2640	Grid	748571.4178	3859567.048	219.45	2685	Grid	748568.7138	3859767.03	207.5
2596	Grid	747258.994	3859419.983	193.97	2641	Grid	748667.0678	3859568.342	221.65	2686	Grid	748664.3638	3859768.324	219
2597	Grid	747118.3423	3859359.462	192.44	2642	Grid	748762.7178	3859569.635	222.97	2687	Grid	748760.0138	3859769.617	219.55
2598	Grid	746949.3783	3859227.808	195.56	2643	Grid	748858.3678	3859570.928	207.05	2688	Grid	748855.6638	3859770.91	206.04
2599	Grid	746892.7537	3859085.542	212.92	2644	Grid	748954.0178	3859572.222	182.66	2689	Grid	748951.3138	3859772.204	174.01
2600	Grid	747424.9699	3859451.538	230.65	2645	Grid	747244.569	3859614.922	221.86	2690	Grid	747244.7951	3859816.164	179.77
2601	Grid	747520.6199	3859452.831	214.16	2646	Grid	747080.4753	3859544.313	169.92	2691	Grid	747086.562	3859748.078	157.16
2602	Grid	747616.2699	3859454.124	226.68	2647	Grid	746916.3816	3859473.705	175.99	2692	Grid	746928.3288	3859679.991	151.05
2603	Grid	747711.9199	3859455.418	200.69	2648	Grid	746801.3038	3859355.412	191.22	2693	Grid	746770.0956	3859611.904	150.23
2604	Grid	747807.5699	3859456.711	173.49	2649	Grid	746735.2418	3859189.436	201.84	2694	Grid	746659.1277	3859497.836	150.67
2605	Grid	747903.2199	3859458.004	182.86	2650	Grid	747422.2658	3859651.519	210.19	2695	Grid	746595.4251	3859337.788	155.08
2606	Grid	747998.8699	3859459.298	183.59	2651	Grid	747517.9158	3859652.813	198.28	2696	Grid	746531.7225	3859177.739	157.35
2607	Grid	748094.5199	3859460.591	208.08	2652	Grid	747613.5658	3859654.106	198.31	2697	Grid	747419.5617	3859851.501	217.13
2608	Grid	748190.1699	3859461.884	222.2	2653	Grid	747709.2158	3859655.399	170.3	2698	Grid	747515.2117	3859852.794	182.01
2609	Grid	748285.8199	3859463.178	226.95	2654	Grid	747804.8658	3859656.693	187.48	2699	Grid	747610.8617	3859854.088	165.48
2610	Grid	748381.4699	3859464.471	230.94	2655	Grid	747900.5158	3859657.986	204.03	2700	Grid	747706.5117	3859855.381	190.94

TABLE C-19: Receptors Locations and Elevations

Receptor		UTMs		ELEV (m)	Receptor		UTMs		ELEV (m)	Receptor		UTMs		ELEV (m)
#	Type	X (m)	Y (m)		#	Type	X (m)	Y (m)		#	Type	X (m)	Y (m)	
2701	Grid	747802.1617	3859856.674	217.98	2746	Grid	746478.4154	3859543.441	165.84	2791	Grid	747606.8057	3860154.06	158.84
2702	Grid	747897.8117	3859857.968	220.87	2747	Grid	746443.8115	3859456.501	159.37	2792	Grid	747702.4557	3860155.354	188.56
2703	Grid	747993.4617	3859859.261	217.87	2748	Grid	746409.2076	3859369.561	158.97	2793	Grid	747798.1057	3860156.647	202.48
2704	Grid	748089.1117	3859860.554	215.77	2749	Grid	746374.6038	3859282.621	158.2	2794	Grid	747893.7557	3860157.94	199.41
2705	Grid	748184.7617	3859861.848	208.73	2750	Grid	746339.9999	3859195.681	159.56	2795	Grid	747989.4057	3860159.234	206.71
2706	Grid	748280.4117	3859863.141	216	2751	Grid	746305.396	3859108.741	156	2796	Grid	748085.0557	3860160.527	205.96
2707	Grid	748376.0617	3859864.434	212.98	2752	Grid	746270.7921	3859021.801	157.03	2797	Grid	748180.7057	3860161.82	194.1
2708	Grid	748471.7117	3859865.728	204.22	2753	Grid	747321.2077	3860050.189	171.91	2798	Grid	748276.3557	3860163.114	184.02
2709	Grid	748567.3617	3859867.021	208.8	2754	Grid	747416.8577	3860051.483	209.29	2799	Grid	748372.0057	3860164.407	196.48
2710	Grid	748663.0117	3859868.314	211.44	2755	Grid	747512.5077	3860052.776	180.87	2800	Grid	748467.6557	3860165.7	205.48
2711	Grid	748758.6617	3859869.608	212.21	2756	Grid	747608.1577	3860054.069	160.52	2801	Grid	748563.3057	3860166.994	209.18
2712	Grid	748854.3117	3859870.901	189.98	2757	Grid	747703.8077	3860055.363	202.14	2802	Grid	748658.9557	3860168.287	208.56
2713	Grid	747244.4199	3859916.575	172.47	2758	Grid	747799.4577	3860056.656	209.12	2803	Grid	748754.6057	3860169.58	200.55
2714	Grid	747088.1402	3859849.329	153.91	2759	Grid	747895.1077	3860057.949	209.76	2804	Grid	748850.2557	3860170.874	177.84
2715	Grid	746931.8605	3859782.083	148.94	2760	Grid	747990.7577	3860059.243	207.64	2805	Grid	747235.3912	3860214.408	146.74
2716	Grid	746775.5808	3859714.837	157.07	2761	Grid	748086.4077	3860060.536	209.73	2806	Grid	747152.2789	3860178.646	145
2717	Grid	746587.843	3859568.554	155.94	2762	Grid	748182.0577	3860061.829	208.95	2807	Grid	747069.1665	3860142.883	148.99
2718	Grid	746524.9268	3859410.482	154.01	2763	Grid	748277.7077	3860063.123	203.53	2808	Grid	746986.0541	3860107.12	159.79
2719	Grid	746462.0107	3859252.409	153.73	2764	Grid	748373.3577	3860064.416	188.79	2809	Grid	746902.9417	3860071.357	170.62
2720	Grid	746399.0945	3859094.336	155.01	2765	Grid	748469.0077	3860065.709	203.68	2810	Grid	746819.8293	3860035.595	171.71
2721	Grid	747418.2097	3859951.492	213.32	2766	Grid	748564.6577	3860067.003	210.51	2811	Grid	746736.7169	3859999.832	209.72
2722	Grid	747513.8597	3859952.785	187.65	2767	Grid	748660.3077	3860068.296	208.64	2812	Grid	746653.6046	3859964.069	186.46
2723	Grid	747609.5097	3859954.079	159	2768	Grid	748755.9577	3860069.589	186.63	2813	Grid	746570.4922	3859928.306	178.5
2724	Grid	747705.1597	3859955.372	179.07	2769	Grid	748851.6077	3860070.883	169.65	2814	Grid	746487.3798	3859892.543	220.4
2725	Grid	747800.8097	3859956.665	200.21	2770	Grid	747235.4646	3860113.867	151.01	2815	Grid	746370.8075	3859772.715	202.56
2726	Grid	747896.4597	3859957.959	214.57	2771	Grid	747151.0736	3860077.554	147.65	2816	Grid	746337.3475	3859688.649	220.66
2727	Grid	747992.1097	3859959.252	213.28	2772	Grid	747066.6826	3860041.241	146.16	2817	Grid	746303.8875	3859604.583	187.93
2728	Grid	748087.7597	3859960.545	212.09	2773	Grid	746982.2915	3860004.928	147.8	2818	Grid	746270.4276	3859520.517	174.52
2729	Grid	748183.4097	3859961.839	208.67	2774	Grid	746897.9005	3859968.615	156.1	2819	Grid	746236.9676	3859436.451	195.09
2730	Grid	748279.0597	3859963.132	195.86	2775	Grid	746813.5094	3859932.302	180.09	2820	Grid	746203.5077	3859352.385	181.71
2731	Grid	748374.7097	3859964.425	207.33	2776	Grid	746729.1184	3859895.99	187.1	2821	Grid	746170.0477	3859268.319	186.81
2732	Grid	748470.3597	3859965.719	198.27	2777	Grid	746644.7274	3859859.677	165.78	2822	Grid	746136.5878	3859184.253	178.05
2733	Grid	748566.0097	3859967.012	210	2778	Grid	746560.3363	3859823.364	202.15	2823	Grid	746103.1278	3859100.188	195.61
2734	Grid	748661.6597	3859968.305	196.2	2779	Grid	746441.9706	3859701.691	183.71	2824	Grid	746069.6678	3859016.122	212.6
2735	Grid	748757.3097	3859969.599	197.69	2780	Grid	746407.9959	3859616.332	198.18	2825	Grid	747318.5036	3860250.171	151.28
2736	Grid	748852.9597	3859970.892	189.58	2781	Grid	746374.0211	3859530.973	173.35	2826	Grid	747414.1536	3860251.465	174.84
2737	Grid	747235.2539	3860013.204	156.46	2782	Grid	746340.0464	3859445.614	167.77	2827	Grid	747509.8036	3860252.758	156.54
2738	Grid	747149.3	3859976.219	152.34	2783	Grid	746306.0717	3859360.254	168.56	2828	Grid	747605.4536	3860254.051	182.04
2739	Grid	747063.3462	3859939.233	148.93	2784	Grid	746272.097	3859274.895	169.36	2829	Grid	747701.1036	3860255.345	198.71
2740	Grid	746977.3924	3859902.248	147.46	2785	Grid	746238.1222	3859189.536	169.47	2830	Grid	747796.7536	3860256.638	196.81
2741	Grid	746891.4385	3859865.262	146.86	2786	Grid	746204.1475	3859104.177	167.14	2831	Grid	747892.4036	3860257.931	192.63
2742	Grid	746805.4847	3859828.277	160.46	2787	Grid	746170.1728	3859018.818	179.18	2832	Grid	747988.0536	3860259.225	199.35
2743	Grid	746719.5309	3859791.291	158.5	2788	Grid	747319.8557	3860150.18	156.44	2833	Grid	748083.7036	3860260.518	195.89
2744	Grid	746633.577	3859754.306	183.99	2789	Grid	747415.5057	3860151.474	188.72	2834	Grid	748179.3536	3860261.811	182.02
2745	Grid	746513.0193	3859630.381	169.02	2790	Grid	747511.1557	3860152.767	166.81	2835	Grid	748275.0036	3860263.105	195.48

TABLE C-19: Receptors Locations and Elevations

Receptor		UTMs		ELEV (m)	Receptor		UTMs		ELEV (m)	Receptor		UTMs		ELEV (m)
#	Type	X (m)	Y (m)		#	Type	X (m)	Y (m)		#	Type	X (m)	Y (m)	
2836	Grid	748370.6536	3860264.398	200.84	2881	Grid	746910.0734	3860275.571	213.35	2926	Grid	746084.6961	3859803.327	196.1
2837	Grid	748466.3036	3860265.691	201.87	2882	Grid	746747.783	3860205.739	203.52	2927	Grid	746049.8502	3859715.779	192.16
2838	Grid	748561.9536	3860266.985	199.58	2883	Grid	746585.4925	3860135.906	199.37	2928	Grid	746015.0044	3859628.231	217.13
2839	Grid	748657.6036	3860268.278	203.87	2884	Grid	746423.2021	3860066.073	219.2	2929	Grid	745980.1585	3859540.683	222.35
2840	Grid	748753.2536	3860269.571	198.51	2885	Grid	746228.2436	3859914.165	240.87	2930	Grid	745945.3126	3859453.135	225.26
2841	Grid	748848.9036	3860270.865	176.01	2886	Grid	746162.9076	3859750.012	199.17	2931	Grid	745910.4668	3859365.587	205.73
2842	Grid	748944.5536	3860272.158	159.34	2887	Grid	746097.5716	3859585.86	202.28	2932	Grid	745875.6209	3859278.04	195.81
2843	Grid	749040.2036	3860273.451	194	2888	Grid	746032.2356	3859421.708	213.98	2933	Grid	745840.775	3859190.492	219.81
2844	Grid	749135.8536	3860274.745	192.14	2889	Grid	745966.8996	3859257.555	193.48	2934	Grid	745805.9291	3859102.944	215.6
2845	Grid	749231.5036	3860276.038	176.8	2890	Grid	745901.5636	3859093.403	220.85	2935	Grid	745771.0833	3859015.396	195.05
2846	Grid	749327.1536	3860277.331	166.71	2891	Grid	747411.4496	3860451.446	149.71	2936	Grid	747314.4475	3860550.144	143
2847	Grid	747235.1048	3860314.858	144	2892	Grid	747507.0996	3860452.74	174.85	2937	Grid	747410.0975	3860551.437	153.57
2848	Grid	747071.0111	3860244.249	158.14	2893	Grid	747602.7496	3860454.033	185.92	2938	Grid	747505.7475	3860552.73	177.4
2849	Grid	746906.9174	3860173.641	202.52	2894	Grid	747698.3996	3860455.326	193.26	2939	Grid	747601.3975	3860554.024	184.76
2850	Grid	746742.8237	3860103.032	207.1	2895	Grid	747794.0496	3860456.62	196.17	2940	Grid	747697.0475	3860555.317	190.12
2851	Grid	746578.73	3860032.424	181.45	2896	Grid	747889.6996	3860457.913	185.31	2941	Grid	747792.6975	3860556.61	191.38
2852	Grid	746414.6364	3859961.815	221.41	2897	Grid	747985.3496	3860459.206	173.69	2942	Grid	747888.3475	3860557.904	187.42
2853	Grid	746299.5585	3859843.523	227.54	2898	Grid	748080.9996	3860460.5	175.46	2943	Grid	747983.9975	3860559.197	178.83
2854	Grid	746233.4966	3859677.546	194.16	2899	Grid	748176.6496	3860461.793	194.76	2944	Grid	748079.6475	3860560.49	176.97
2855	Grid	746167.4346	3859511.57	211.52	2900	Grid	748272.2996	3860463.086	197.31	2945	Grid	748175.2975	3860561.784	187.82
2856	Grid	746101.3726	3859345.594	202.48	2901	Grid	748367.9496	3860464.38	195.39	2946	Grid	748270.9475	3860563.077	190.38
2857	Grid	746035.3107	3859179.618	182.91	2902	Grid	748463.5996	3860465.673	183.93	2947	Grid	748366.5975	3860564.37	178.72
2858	Grid	747412.8016	3860351.455	146.27	2903	Grid	748559.2496	3860466.966	193.41	2948	Grid	748462.2475	3860565.664	179.3
2859	Grid	747508.4516	3860352.749	156.95	2904	Grid	748654.8996	3860468.26	191.47	2949	Grid	748557.8975	3860566.957	181.57
2860	Grid	747604.1016	3860354.042	191.96	2905	Grid	748750.5496	3860469.553	172.71	2950	Grid	748653.5475	3860568.25	172.47
2861	Grid	747699.7516	3860355.335	198.38	2906	Grid	748846.1996	3860470.846	164.09	2951	Grid	748749.1975	3860569.544	163.01
2862	Grid	747795.4016	3860356.629	196.15	2907	Grid	748941.8496	3860472.14	160.48	2952	Grid	748844.8475	3860570.837	149.16
2863	Grid	747891.0516	3860357.922	184.18	2908	Grid	749037.4996	3860473.433	157.54	2953	Grid	748940.4975	3860572.13	143.59
2864	Grid	747986.7016	3860359.215	194.26	2909	Grid	749133.1496	3860474.726	152.19	2954	Grid	749036.1475	3860573.424	140.63
2865	Grid	748082.3516	3860360.509	176.01	2910	Grid	749228.7996	3860476.02	151.33	2955	Grid	749131.7975	3860574.717	141.59
2866	Grid	748178.0016	3860361.802	190.49	2911	Grid	749324.4496	3860477.313	145.75	2956	Grid	749227.4475	3860576.01	141.34
2867	Grid	748273.6516	3860363.095	199.22	2912	Grid	747227.8926	3860512.9	146.79	2957	Grid	749323.0975	3860577.304	143.96
2868	Grid	748369.3016	3860364.389	199.94	2913	Grid	747141.3377	3860475.656	191.89	2958	Grid	747227.6998	3860613.389	148.06
2869	Grid	748464.9516	3860365.682	196.57	2914	Grid	747054.7828	3860438.412	180.86	2959	Grid	747142.3041	3860576.644	184.91
2870	Grid	748560.6016	3860366.975	192.21	2915	Grid	746968.2279	3860401.167	176.27	2960	Grid	747056.9084	3860539.899	197.9
2871	Grid	748656.2516	3860368.269	195.8	2916	Grid	746881.673	3860363.923	195.77	2961	Grid	746971.5128	3860503.154	199
2872	Grid	748751.9016	3860369.562	196.17	2917	Grid	746795.1181	3860326.679	221.99	2962	Grid	746886.1171	3860466.408	204.79
2873	Grid	748847.5516	3860370.855	179.57	2918	Grid	746708.5632	3860289.435	231.72	2963	Grid	746800.7214	3860429.663	211.82
2874	Grid	748943.2016	3860372.149	157.01	2919	Grid	746622.0083	3860252.191	232.95	2964	Grid	746715.3257	3860392.918	215.05
2875	Grid	749038.8516	3860373.442	185.53	2920	Grid	746535.4534	3860214.947	218.82	2965	Grid	746629.93	3860356.172	221.82
2876	Grid	749134.5016	3860374.735	185.49	2921	Grid	746448.8985	3860177.703	208.41	2966	Grid	746544.5343	3860319.427	218.93
2877	Grid	749230.1516	3860376.029	173.22	2922	Grid	746362.3436	3860140.459	220.37	2967	Grid	746459.1386	3860282.682	230.69
2878	Grid	749325.8016	3860377.322	155.21	2923	Grid	746275.7886	3860103.215	245.22	2968	Grid	746373.7429	3860245.937	226.07
2879	Grid	747234.6543	3860415.237	145.04	2924	Grid	746154.3879	3859978.423	233.55	2969	Grid	746288.3472	3860209.191	228.34
2880	Grid	747072.3639	3860345.404	158.26	2925	Grid	746119.542	3859890.875	226.12	2970	Grid	746202.9515	3860172.446	246.36

TABLE C-19: Receptors Locations and Elevations

Receptor		UTMs		ELEV (m)	Receptor		UTMs		ELEV (m)	Receptor		UTMs		ELEV (m)
#	Type	X (m)	Y (m)		#	Type	X (m)	Y (m)		#	Type	X (m)	Y (m)	
2971	Grid	746083.1767	3860049.325	228.56	3016	Grid	746383.4421	3860350.683	235.96	3061	Grid	746809.3197	3860634.508	197.47
2972	Grid	746048.7975	3859962.95	203.63	3017	Grid	746299.0511	3860314.37	237.45	3062	Grid	746725.8077	3860598.573	207.4
2973	Grid	746014.4183	3859876.575	193.1	3018	Grid	746214.66	3860278.057	244.42	3063	Grid	746642.2958	3860562.639	216.12
2974	Grid	745980.0391	3859790.199	193.28	3019	Grid	746130.269	3860241.744	246.15	3064	Grid	746558.7838	3860526.704	224.19
2975	Grid	745945.6599	3859703.824	220.33	3020	Grid	746011.9032	3860120.072	234.84	3065	Grid	746475.2718	3860490.769	230.16
2976	Grid	745911.2807	3859617.448	240.5	3021	Grid	745977.9285	3860034.712	212.73	3066	Grid	746391.7599	3860454.835	234.62
2977	Grid	745876.9015	3859531.073	228.57	3022	Grid	745943.9538	3859949.353	219.77	3067	Grid	746308.2479	3860418.9	237.45
2978	Grid	745842.5224	3859444.698	215.45	3023	Grid	745909.9791	3859863.994	211.33	3068	Grid	746224.736	3860382.965	243.88
2979	Grid	745808.1432	3859358.322	208.23	3024	Grid	745876.0043	3859778.635	213.52	3069	Grid	746141.224	3860347.03	243.25
2980	Grid	745773.764	3859271.947	214.72	3025	Grid	745842.0296	3859693.276	237.61	3070	Grid	746057.712	3860311.096	244.3
2981	Grid	745739.3848	3859185.571	218.55	3026	Grid	745808.0549	3859607.916	242.51	3071	Grid	745940.5792	3860190.691	236.79
2982	Grid	745705.0056	3859099.196	210	3027	Grid	745774.0802	3859522.557	230.65	3072	Grid	745906.9584	3860106.221	234.5
2983	Grid	745670.6264	3859012.821	195.12	3028	Grid	745740.1054	3859437.198	225.33	3073	Grid	745873.3376	3860021.751	232.97
2984	Grid	747313.0955	3860650.135	143	3029	Grid	745706.1307	3859351.839	222.39	3074	Grid	745839.7168	3859937.281	220.51
2985	Grid	747408.7455	3860651.428	151.1	3030	Grid	745672.156	3859266.479	219.19	3075	Grid	745806.096	3859852.811	219.97
2986	Grid	747504.3955	3860652.721	174.11	3031	Grid	745638.1812	3859181.12	204.51	3076	Grid	745772.4751	3859768.341	237.43
2987	Grid	747600.0455	3860654.015	186.15	3032	Grid	745604.2065	3859095.761	194.87	3077	Grid	745738.8543	3859683.871	245.69
2988	Grid	747695.6955	3860655.308	186.94	3033	Grid	745570.2318	3859010.402	184.14	3078	Grid	745705.2335	3859599.4	245.14
2989	Grid	747791.3455	3860656.601	184.19	3034	Grid	747311.7435	3860750.125	143	3079	Grid	745671.6127	3859514.93	243.72
2990	Grid	747886.9955	3860657.895	182.17	3035	Grid	747407.3935	3860751.419	148.15	3080	Grid	745637.9918	3859430.46	231.93
2991	Grid	747982.6455	3860659.188	162.13	3036	Grid	747503.0435	3860752.712	170.11	3081	Grid	745604.371	3859345.99	218.34
2992	Grid	748078.2955	3860660.481	174.18	3037	Grid	747598.6935	3860754.005	180.84	3082	Grid	745570.7502	3859261.52	207.05
2993	Grid	748173.9455	3860661.775	182.76	3038	Grid	747694.3435	3860755.299	183.65	3083	Grid	745537.1294	3859177.05	198.54
2994	Grid	748269.5955	3860663.068	185.76	3039	Grid	747789.9935	3860756.592	174.38	3084	Grid	745503.5086	3859092.58	193.68
2995	Grid	748365.2455	3860664.361	170.08	3040	Grid	747885.6435	3860757.885	157.32	3085	Grid	745469.8877	3859008.11	193.86
2996	Grid	748460.8955	3860665.655	154.47	3041	Grid	747981.2935	3860759.179	171.52	3086	Grid	747310.3915	3860850.116	142.26
2997	Grid	748556.5455	3860666.948	150.92	3042	Grid	748076.9435	3860760.472	186.13	3087	Grid	747406.0415	3860851.41	145.06
2998	Grid	748652.1955	3860668.241	146.6	3043	Grid	748172.5935	3860761.765	183.41	3088	Grid	747501.6915	3860852.703	171.11
2999	Grid	748747.8455	3860669.535	142.81	3044	Grid	748268.2435	3860763.059	163.23	3089	Grid	747597.3415	3860853.996	181.27
3000	Grid	748843.4955	3860670.828	139.75	3045	Grid	748363.8935	3860764.352	149.08	3090	Grid	747692.9915	3860855.29	184.39
3001	Grid	748939.1455	3860672.121	137.11	3046	Grid	748459.5435	3860765.645	143.1	3091	Grid	747788.6415	3860856.583	168.23
3002	Grid	749034.7955	3860673.415	138.3	3047	Grid	748555.1935	3860766.939	138.5	3092	Grid	747884.2915	3860857.876	152.6
3003	Grid	749130.4455	3860674.708	138.25	3048	Grid	748650.8435	3860768.232	135.18	3093	Grid	747979.9415	3860859.17	178.36
3004	Grid	749226.0955	3860676.001	137.13	3049	Grid	748746.4935	3860769.525	134.05	3094	Grid	748075.5915	3860860.463	185.12
3005	Grid	749321.7455	3860677.295	137.34	3050	Grid	748842.1435	3860770.819	134.03	3095	Grid	748171.2415	3860861.756	163.69
3006	Grid	747227.3525	3860713.813	145.17	3051	Grid	748937.7935	3860772.112	134.01	3096	Grid	748266.8915	3860863.05	143.06
3007	Grid	747142.9614	3860677.5	165.43	3052	Grid	749033.4435	3860773.405	134	3097	Grid	748362.5415	3860864.343	137.18
3008	Grid	747058.5704	3860641.187	183.36	3053	Grid	749129.0935	3860774.699	134	3098	Grid	748458.1915	3860865.636	133.86
3009	Grid	746974.1793	3860604.874	189.49	3054	Grid	749224.7435	3860775.992	134.88	3099	Grid	748553.8415	3860866.93	132.85
3010	Grid	746889.7883	3860568.561	183.99	3055	Grid	749320.3935	3860777.285	134.93	3100	Grid	748649.4915	3860868.223	133
3011	Grid	746805.3973	3860532.248	183.09	3056	Grid	747226.8795	3860814.182	144.73	3101	Grid	748745.1415	3860869.516	133
3012	Grid	746721.0062	3860495.935	201.59	3057	Grid	747143.3675	3860778.247	164.92	3102	Grid	748840.7915	3860870.81	133
3013	Grid	746636.6152	3860459.622	212.77	3058	Grid	747059.8556	3860742.312	152.6	3103	Grid	748936.4415	3860872.103	133.68
3014	Grid	746552.2242	3860423.309	222.87	3059	Grid	746976.3436	3860706.377	163.72	3104	Grid	749032.0915	3860873.396	133.63
3015	Grid	746467.8331	3860386.996	231.82	3060	Grid	746892.8317	3860670.443	182.39	3105	Grid	749127.7415	3860874.69	133.64

TABLE C-19: Receptors Locations and Elevations

Receptor		UTMs		ELEV (m)	Receptor		UTMs		ELEV (m)	Receptor		UTMs		ELEV (m)
#	Type	X (m)	Y (m)		#	Type	X (m)	Y (m)		#	Type	X (m)	Y (m)	
3106	Grid	749223.3915	3860875.983	134	3151	Grid	749030.7394	3860973.387	133	3196	Grid	748890.3084	3861225.198	132
3107	Grid	749319.0415	3860877.276	134	3152	Grid	749126.3894	3860974.681	133	3197	Grid	748799.7726	3861207.282	131.1
3108	Grid	747226.3031	3860914.506	144.3	3153	Grid	749222.0394	3860975.974	133	3198	Grid	748709.2368	3861189.366	131
3109	Grid	747143.5668	3860878.905	173.1	3154	Grid	749317.6894	3860977.267	133	3199	Grid	748618.701	3861171.449	131
3110	Grid	747060.8305	3860843.304	180.3	3155	Grid	749316.8632	3858980.019	231.04	3200	Grid	748528.1652	3861153.533	130.4
3111	Grid	746895.3579	3860772.102	165.38	3156	Grid	749204.906	3858994.274	211.28	3201	Grid	748437.6294	3861135.617	130
3112	Grid	746812.6216	3860736.501	170.97	3157	Grid	749090.7317	3858978.404	192.2	3202	Grid	748347.0936	3861117.7	130.49
3113	Grid	746729.8853	3860700.901	187.64	3158	Grid	747323.0401	3858891.54	230.69	3203	Grid	748256.5578	3861099.784	131
3114	Grid	746647.149	3860665.3	194.73	3159	Grid	749207.6038	3861092.003	132.48	3204	Grid	748166.022	3861081.868	131
3115	Grid	746481.6763	3860594.098	209.48	3160	Grid	748909.7302	3858981.179	210.82	3205	Grid	748075.4862	3861063.952	132.5
3116	Grid	746398.94	3860558.497	227.72	3161	Grid	748808.0173	3858983.079	225.31	3206	Grid	749316.9299	3861403.914	129.54
3117	Grid	746316.2037	3860522.896	229.97	3162	Grid	748709.8918	3858973.14	228.71	3207	Grid	749225.9428	3861385.909	131
3118	Grid	746233.4674	3860487.295	221.98	3163	Grid	748205.222	3858969.786	216.69	3208	Grid	749134.9556	3861367.903	131.46
3119	Grid	746067.9948	3860416.093	245.61	3164	Grid	748105.9543	3858963.616	215.8	3209	Grid	749043.9685	3861349.898	131.92
3120	Grid	745985.2585	3860380.492	245.54	3165	Grid	748005.2656	3858962.136	195.8	3210	Grid	748952.9814	3861331.892	132
3121	Grid	745869.2136	3860261.205	233.93	3166	Grid	747600.4013	3858963.177	224.73	3211	Grid	748861.9942	3861313.886	131.26
3122	Grid	745835.9051	3860177.52	229.87	3167	Grid	747499.9974	3858960.757	232.44	3212	Grid	748771.0071	3861295.881	131
3123	Grid	745802.5965	3860093.834	231.48	3168	Grid	747400.4239	3858955.597	245.07	3213	Grid	748680.02	3861277.875	131
3124	Grid	745735.9794	3859926.463	231.76	3169	Grid	748557.3161	3858978.576	207.66	3214	Grid	748589.0328	3861259.87	130.13
3125	Grid	745702.6708	3859842.778	235.94	3170	Grid	748459.2485	3858973.268	198.46	3215	Grid	748498.0457	3861241.864	130
3126	Grid	745669.3623	3859759.092	238.52	3171	Grid	748357.3177	3858977.774	194.27	3216	Grid	748407.0586	3861223.858	130
3127	Grid	745602.7452	3859591.721	238.42	3172	Grid	747858.4703	3858972.852	229.89	3217	Grid	748316.0714	3861205.853	130
3128	Grid	745569.4366	3859508.036	228.81	3173	Grid	747759.5018	3858969.832	197.61	3218	Grid	748225.0843	3861187.847	130.14
3129	Grid	745536.1281	3859424.35	220.27	3174	Grid	749111.4702	3861091.158	133	3219	Grid	748134.0972	3861169.842	131
3130	Grid	745469.511	3859256.979	203.66	3175	Grid	749145.2001	3861208.444	132	3220	Grid	748043.11	3861151.836	131
3131	Grid	745436.2024	3859173.294	198.43	3176	Grid	749031.955	3861156.893	132.18	3221	Grid	747958.5802	3861085.255	136.56
3132	Grid	745402.8939	3859089.608	201.92	3177	Grid	748918.7099	3861105.342	132	3222	Grid	749336.1511	3861502.01	128.32
3133	Grid	747309.0394	3860950.107	142	3178	Grid	747218.4771	3859041.199	231.87	3223	Grid	749244.7563	3861483.923	129.98
3134	Grid	747404.6894	3860951.401	144.72	3179	Grid	747333.2851	3858748.884	252.98	3224	Grid	749153.3616	3861465.837	130.88
3135	Grid	747500.3394	3860952.694	168.03	3180	Grid	747172.9554	3859164.898	222.07	3225	Grid	749061.9668	3861447.751	130.49
3136	Grid	747595.9894	3860953.987	177.03	3181	Grid	747339.3787	3859901.144	211.48	3226	Grid	748970.572	3861429.664	131
3137	Grid	747691.6394	3860955.281	177.92	3182	Grid	747346.1231	3859393.6	220.77	3227	Grid	748879.1772	3861411.578	130.74
3138	Grid	747787.2894	3860956.574	151.66	3183	Grid	747332.0503	3858517.595	237.92	3228	Grid	748787.7824	3861393.492	130.86
3139	Grid	747882.9394	3860957.867	167.17	3184	Grid	748937.9911	3859914.554	170.65	3229	Grid	748696.3877	3861375.406	130
3140	Grid	747978.5894	3860959.161	176.5	3185	Grid	748941.3373	3860009.508	168.78	3230	Grid	748604.9929	3861357.319	130
3141	Grid	748074.2394	3860960.454	165.88	3186	Grid	749304.6072	3861109.56	132	3231	Grid	748513.5981	3861339.233	130
3142	Grid	748169.8894	3860961.747	141.38	3187	Grid	749278.522	3861207.731	132	3232	Grid	748422.2033	3861321.147	130
3143	Grid	748265.5394	3860963.041	132.9	3188	Grid	748828.3551	3861118.647	132	3233	Grid	748330.8085	3861303.061	129.57
3144	Grid	748361.1894	3860964.334	131	3189	Grid	748738.3217	3861100.83	131.19	3234	Grid	748239.4138	3861284.974	130
3145	Grid	748456.8394	3860965.627	131	3190	Grid	748648.2883	3861083.013	131	3235	Grid	748148.019	3861266.888	130
3146	Grid	748552.4894	3860966.921	131	3191	Grid	748558.2549	3861065.196	131	3236	Grid	748056.6242	3861248.802	130.07
3147	Grid	748648.1394	3860968.214	131.55	3192	Grid	749297.7196	3861305.821	131.04	3237	Grid	747965.2294	3861230.715	131
3148	Grid	748743.7894	3860969.507	132.14	3193	Grid	749207.1838	3861287.905	132	3238	Grid	747890.0992	3861149.079	132.01
3149	Grid	748839.4394	3860970.801	133	3194	Grid	749071.3801	3861261.031	132	3239	Grid	747837.8177	3861071.963	150.56
3150	Grid	748935.0894	3860972.094	133	3195	Grid	748980.8442	3861243.114	132	3240	Grid	749355.7294	3861600.175	129.43

TABLE C-19: Receptors Locations and Elevations

Receptor		UTMs		ELEV (m)	Receptor		UTMs		ELEV (m)	Receptor		UTMs		ELEV (m)
#	Type	X (m)	Y (m)		#	Type	X (m)	Y (m)		#	Type	X (m)	Y (m)	
3241	Grid	749265.3549	3861582.291	128	3286	Grid	749608.6223	3860897.983	135	3331	Grid	748287.9107	3861506.738	129
3242	Grid	749174.9805	3861564.407	128.6	3287	Grid	749707.6223	3860900.988	135	3332	Grid	748202.1384	3861468.195	129
3243	Grid	749084.6061	3861546.522	129.69	3288	Grid	749407.5884	3860991.927	133.31	3333	Grid	748888.3167	3861776.533	128
3244	Grid	748994.2317	3861528.638	128	3289	Grid	749506.5884	3860994.932	134	3334	Grid	748987.3167	3861779.538	128
3245	Grid	748903.8572	3861510.754	128.13	3290	Grid	749605.5884	3860997.937	134.55	3335	Grid	749086.3167	3861782.543	128
3246	Grid	748813.4828	3861492.869	130	3291	Grid	749704.5884	3861000.942	134.38	3336	Grid	749185.3167	3861785.548	128
3247	Grid	748723.1084	3861474.985	130	3292	Grid	749404.5544	3861091.881	132.35	3337	Grid	749284.3167	3861788.553	128
3248	Grid	748632.734	3861457.101	130	3293	Grid	749503.5544	3861094.886	132.99	3338	Grid	749383.3167	3861791.558	128.63
3249	Grid	748542.3595	3861439.216	130	3294	Grid	749602.5544	3861097.891	133.19	3339	Grid	749482.3167	3861794.563	132.41
3250	Grid	748451.9851	3861421.332	130	3295	Grid	749701.5544	3861100.896	128.84	3340	Grid	749581.3167	3861797.568	143.6
3251	Grid	748361.6107	3861403.447	129	3296	Grid	749401.5204	3861191.835	131.01	3341	Grid	749680.3167	3861800.573	147.88
3252	Grid	748271.2363	3861385.563	129.23	3297	Grid	749500.5204	3861194.84	128	3342	Grid	748800.6592	3861838.461	128
3253	Grid	748180.8619	3861367.679	129.09	3298	Grid	749599.5204	3861197.845	128	3343	Grid	748716.0356	3861800.435	128
3254	Grid	748090.4874	3861349.794	130	3299	Grid	749698.5204	3861200.85	128.29	3344	Grid	748631.4121	3861762.409	129.41
3255	Grid	748000.113	3861331.91	130	3300	Grid	749398.4865	3861291.789	128.58	3345	Grid	748546.7885	3861724.383	130.53
3256	Grid	747909.7386	3861314.026	130.44	3301	Grid	749497.4865	3861294.794	128	3346	Grid	748462.165	3861686.357	129
3257	Grid	747835.4471	3861233.3	131	3302	Grid	749596.4865	3861297.799	128	3347	Grid	748377.5414	3861648.331	129
3258	Grid	747783.7493	3861157.046	137.15	3303	Grid	749695.4865	3861300.804	131.02	3348	Grid	748292.9179	3861610.305	128.05
3259	Grid	747732.0515	3861080.792	159.53	3304	Grid	749494.4525	3861394.748	128	3349	Grid	748208.2943	3861572.279	128.66
3260	Grid	749428.826	3860292.249	180.51	3305	Grid	749593.4525	3861397.753	128	3350	Grid	748123.6708	3861534.253	128
3261	Grid	749527.826	3860295.254	175.38	3306	Grid	749692.4525	3861400.758	131.94	3351	Grid	748039.0472	3861496.227	128.16
3262	Grid	749626.826	3860298.259	154.51	3307	Grid	749491.4186	3861494.702	128.7	3352	Grid	747954.4237	3861458.201	129
3263	Grid	749725.826	3860301.264	144.36	3308	Grid	749590.4186	3861497.707	132.45	3353	Grid	747869.8001	3861420.175	130
3264	Grid	749425.7921	3860392.203	158.01	3309	Grid	749689.4186	3861500.712	131.87	3354	Grid	747785.1766	3861382.149	131
3265	Grid	749524.7921	3860395.208	144.45	3310	Grid	749488.3846	3861594.656	130.59	3355	Grid	747667.4778	3861257.444	137.04
3266	Grid	749623.7921	3860398.213	142.47	3311	Grid	749587.3846	3861597.661	130.49	3356	Grid	747634.4026	3861170.766	150.54
3267	Grid	749722.7921	3860401.218	142	3312	Grid	749686.3846	3861600.666	129.35	3357	Grid	747601.3274	3861084.087	168.62
3268	Grid	749422.7581	3860492.157	143.07	3313	Grid	748804.2382	3861637.435	129	3358	Grid	748885.2827	3861876.487	128
3269	Grid	749521.7581	3860495.162	141.8	3314	Grid	748717.1257	3861598.291	129	3359	Grid	748984.2827	3861879.492	128
3270	Grid	749620.7581	3860498.167	140.52	3315	Grid	748630.0132	3861559.146	129.36	3360	Grid	749083.2827	3861882.497	128
3271	Grid	749719.7581	3860501.172	137.05	3316	Grid	748891.3507	3861676.579	128	3361	Grid	749182.2827	3861885.502	128.85
3272	Grid	749419.7242	3860592.111	141.14	3317	Grid	748990.3507	3861679.584	128	3362	Grid	749281.2827	3861888.507	140.02
3273	Grid	749518.7242	3860595.116	137	3318	Grid	749089.3507	3861682.589	128.85	3363	Grid	749380.2827	3861891.512	148.38
3274	Grid	749617.7242	3860598.121	137	3319	Grid	749188.3507	3861685.594	128.44	3364	Grid	749479.2827	3861894.517	147.91
3275	Grid	749716.7242	3860601.126	136.71	3320	Grid	749287.3507	3861688.599	129.21	3365	Grid	749578.2827	3861897.522	149.51
3276	Grid	749416.6902	3860692.065	136.16	3321	Grid	749386.3507	3861691.604	128.36	3366	Grid	749677.2827	3861900.527	151.88
3277	Grid	749515.6902	3860695.07	136	3322	Grid	749485.3507	3861694.609	128.04	3367	Grid	748792.6474	3861936.178	127.55
3278	Grid	749614.6902	3860698.075	136.3	3323	Grid	749584.3507	3861697.614	129.84	3368	Grid	748703.046	3861895.916	125.28
3279	Grid	749713.6902	3860701.08	136	3324	Grid	749683.3507	3861700.619	134.46	3369	Grid	748613.4446	3861855.653	128.01
3280	Grid	749413.6563	3860792.019	135	3325	Grid	748802.5444	3861737.991	128	3370	Grid	748523.8432	3861815.39	130.23
3281	Grid	749512.6563	3860795.024	135	3326	Grid	748716.7721	3861699.449	128.1	3371	Grid	748434.2417	3861775.127	129.58
3282	Grid	749611.6563	3860798.029	135.04	3327	Grid	748630.9998	3861660.907	129	3372	Grid	748344.6403	3861734.864	128
3283	Grid	749710.6563	3860801.034	136	3328	Grid	748545.2275	3861622.364	129	3373	Grid	748255.0389	3861694.601	128
3284	Grid	749410.6223	3860891.973	134	3329	Grid	748459.4553	3861583.822	129	3374	Grid	748165.4375	3861654.338	128
3285	Grid	749509.6223	3860894.978	134	3330	Grid	748373.683	3861545.28	129	3375	Grid	748075.8361	3861614.075	128

TABLE C-19: Receptors Locations and Elevations

Receptor		UTMs		ELEV (m)	Receptor		UTMs		ELEV (m)	Receptor		UTMs		ELEV (m)
#	Type	X (m)	Y (m)		#	Type	X (m)	Y (m)		#	Type	X (m)	Y (m)	
3376	Grid	747986.2347	3861573.813	129	3421	Grid	748701.9559	3862098.06	124.95	3466	Grid	749936.1866	3859926.246	192.91
3377	Grid	747896.6333	3861533.55	129.57	3422	Grid	748614.8434	3862058.916	121.14	3467	Grid	749938.652	3859832.8	183.02
3378	Grid	747807.0319	3861493.287	130	3423	Grid	748527.731	3862019.771	122.42	3468	Grid	749941.1174	3859739.354	183.57
3379	Grid	747717.4305	3861453.024	131	3424	Grid	748440.6185	3861980.627	124.24	3469	Grid	749943.5827	3859645.908	206.08
3380	Grid	747592.8083	3861320.984	133.71	3425	Grid	748353.506	3861941.482	124.7	3470	Grid	749946.0481	3859552.462	211.99
3381	Grid	747557.7874	3861229.207	144.24	3426	Grid	748266.3935	3861902.338	121.72	3471	Grid	749948.5135	3859459.016	218.87
3382	Grid	747522.7666	3861137.429	152.26	3427	Grid	748179.281	3861863.194	123.12	3472	Grid	749950.9789	3859365.569	221.59
3383	Grid	747487.7458	3861045.652	153.92	3428	Grid	748092.1686	3861824.049	126.39	3473	Grid	749953.4443	3859272.123	225.3
3384	Grid	748882.2488	3861976.441	127.17	3429	Grid	748005.0561	3861784.905	128.07	3474	Grid	749955.9097	3859178.677	235.57
3385	Grid	748981.2488	3861979.446	128.06	3430	Grid	747917.9436	3861745.76	129	3475	Grid	749958.375	3859085.231	246.37
3386	Grid	749080.2488	3861982.451	130.44	3431	Grid	747830.8311	3861706.616	129	3476	Grid	749960.8404	3858991.785	256.45
3387	Grid	749179.2488	3861985.456	146.68	3432	Grid	747743.7186	3861667.471	129	3477	Grid	749997.4676	3860279.272	145.44
3388	Grid	749278.2488	3861988.461	147.54	3433	Grid	747656.6061	3861628.327	129.47	3478	Grid	749863.1803	3860446.639	138.86
3389	Grid	749377.2488	3861991.466	149.45	3434	Grid	747569.4937	3861589.182	130.15	3479	Grid	750031.221	3860115.776	163.37
3390	Grid	749476.2488	3861994.471	150.74	3435	Grid	747448.3332	3861460.81	132	3480	Grid	750033.6864	3860022.33	193.67
3391	Grid	749575.2488	3861997.476	152.88	3436	Grid	747414.2852	3861371.582	133.03	3481	Grid	750036.1518	3859928.884	195.3
3392	Grid	749674.2488	3862000.481	155.28	3437	Grid	747380.2372	3861282.354	135	3482	Grid	750038.6172	3859835.438	198.6
3393	Grid	748790.9409	3862036.729	127.07	3438	Grid	747346.1891	3861193.126	139.23	3483	Grid	750041.0826	3859741.991	202.57
3394	Grid	748702.6669	3861997.063	123.65	3439	Grid	747312.1411	3861103.899	141.39	3484	Grid	750043.548	3859648.545	196.08
3395	Grid	748614.3929	3861957.396	124.47	3440	Grid	748876.1809	3862176.349	132.29	3485	Grid	750046.0133	3859555.099	206.63
3396	Grid	748526.1189	3861917.73	126.82	3441	Grid	748975.1809	3862179.354	147.52	3486	Grid	750048.4787	3859461.653	218.07
3397	Grid	748437.8449	3861878.063	129	3442	Grid	749074.1809	3862182.359	146.66	3487	Grid	750050.9441	3859368.207	221.82
3398	Grid	748349.571	3861838.397	128.19	3443	Grid	749173.1809	3862185.364	146.1	3488	Grid	750053.4095	3859274.761	222.87
3399	Grid	748261.297	3861798.731	125.77	3444	Grid	749272.1809	3862188.369	149.33	3489	Grid	750055.8749	3859181.314	208.5
3400	Grid	748173.023	3861759.064	126.11	3445	Grid	749371.1809	3862191.374	153.24	3490	Grid	750058.3403	3859087.868	230.38
3401	Grid	748084.749	3861719.398	127.64	3446	Grid	749470.1809	3862194.379	155.4	3491	Grid	750060.8056	3858994.422	226.61
3402	Grid	747996.475	3861679.731	129	3447	Grid	749569.1809	3862197.384	156.92	3492	Grid	750097.4328	3860281.909	144.05
3403	Grid	747908.201	3861640.065	129	3448	Grid	749668.1809	3862200.389	159.06	3493	Grid	750034.8566	3860422.009	140
3404	Grid	747819.9271	3861600.399	130	3449	Grid	749828.8252	3860203.947	159.8	3494	Grid	749931.8574	3860519.326	138.4
3405	Grid	747731.6531	3861560.732	130	3450	Grid	749831.2906	3860110.501	159.8	3495	Grid	750131.1862	3860118.413	159.18
3406	Grid	747643.3791	3861521.066	131	3451	Grid	749833.756	3860017.055	165.69	3496	Grid	750133.6516	3860024.967	188.04
3407	Grid	747520.6031	3861390.982	131.38	3452	Grid	749836.2214	3859923.609	174.24	3497	Grid	750136.117	3859931.521	182.54
3408	Grid	747486.1012	3861300.564	134.32	3453	Grid	749838.6868	3859830.163	185.26	3498	Grid	750138.5824	3859838.075	193.1
3409	Grid	747451.5992	3861210.147	135.29	3454	Grid	749841.1521	3859736.717	193.35	3499	Grid	750141.0478	3859744.629	205.98
3410	Grid	747417.0972	3861119.729	141.02	3455	Grid	749843.6175	3859643.27	198.61	3500	Grid	750143.5132	3859651.183	210.35
3411	Grid	748879.2148	3862076.395	129.4	3456	Grid	749846.0829	3859549.824	198.33	3501	Grid	750145.9786	3859557.736	210.93
3412	Grid	748978.2148	3862079.4	136.47	3457	Grid	749848.5483	3859456.378	207.73	3502	Grid	750148.4439	3859464.29	211.57
3413	Grid	749077.2148	3862082.405	146.45	3458	Grid	749851.0137	3859362.932	220.45	3503	Grid	750150.9093	3859370.844	211.89
3414	Grid	749176.2148	3862085.41	148	3459	Grid	749853.4791	3859269.486	229.88	3504	Grid	750153.3747	3859277.398	199.04
3415	Grid	749275.2148	3862088.415	149.04	3460	Grid	749855.9444	3859176.04	235.25	3505	Grid	750155.8401	3859183.952	192.89
3416	Grid	749374.2148	3862091.42	150.7	3461	Grid	749858.4098	3859082.594	248.63	3506	Grid	750158.3055	3859090.506	192.03
3417	Grid	749473.2148	3862094.425	153.07	3462	Grid	749860.8752	3858989.147	256.76	3507	Grid	750160.7709	3858997.06	194.73
3418	Grid	749572.2148	3862097.43	155.94	3463	Grid	749897.5023	3860276.635	146.42	3508	Grid	750197.398	3860284.547	141.94
3419	Grid	749671.2148	3862100.435	158.07	3464	Grid	749931.2558	3860113.139	177.97	3509	Grid	750134.8218	3860424.647	140
3420	Grid	748789.0684	3862137.205	128.84	3465	Grid	749933.7212	3860019.692	195.44	3510	Grid	750000.5345	3860592.013	138.22

TABLE C-19: Receptors Locations and Elevations

Receptor		UTMs		ELEV (m)	Receptor		UTMs		ELEV (m)	Receptor		UTMs		ELEV (m)
#	Type	X (m)	Y (m)		#	Type	X (m)	Y (m)		#	Type	X (m)	Y (m)	
3511	Grid	749857.1124	3860646.547	137	3556	Grid	750440.9434	3859752.541	173.74	3601	Grid	750466.9322	3861106.278	138.44
3512	Grid	750231.1515	3860121.051	168.33	3557	Grid	750443.4088	3859659.095	179.84	3602	Grid	750380.8789	3861138.998	134
3513	Grid	750233.6168	3860027.605	160.05	3558	Grid	750445.8742	3859565.649	199.42	3603	Grid	750294.8256	3861171.718	134
3514	Grid	750236.0822	3859934.158	172.81	3559	Grid	750448.3396	3859472.202	209.93	3604	Grid	750208.7723	3861204.438	134
3515	Grid	750238.5476	3859840.712	196.78	3560	Grid	750450.805	3859378.756	214.86	3605	Grid	750122.719	3861237.158	134.36
3516	Grid	750241.013	3859747.266	204.41	3561	Grid	750453.2704	3859285.31	222.82	3606	Grid	750036.6657	3861269.878	134.42
3517	Grid	750243.4784	3859653.82	208.31	3562	Grid	750455.7357	3859191.864	222.76	3607	Grid	749950.6124	3861302.598	133.95
3518	Grid	750245.9438	3859560.374	205.23	3563	Grid	750458.2011	3859098.418	231.91	3608	Grid	749864.5591	3861335.318	134.76
3519	Grid	750248.4092	3859466.928	191.61	3564	Grid	750460.6665	3859004.972	242.14	3609	Grid	749778.5058	3861368.038	133.3
3520	Grid	750250.8745	3859373.481	183.48	3565	Grid	750492.8239	3860302.466	140	3610	Grid	750658.6394	3861063.459	138.7
3521	Grid	750253.3399	3859280.035	184.13	3566	Grid	750421.3083	3860462.58	139	3611	Grid	750536.9131	3861178.47	144.07
3522	Grid	750255.8053	3859186.589	201.31	3567	Grid	750349.7926	3860622.695	139	3612	Grid	750452.1637	3861210.694	144.27
3523	Grid	750258.2707	3859093.143	213.43	3568	Grid	750196.3214	3860813.971	138	3613	Grid	750367.4142	3861242.918	143.51
3524	Grid	750260.7361	3858999.697	213.61	3569	Grid	750032.4104	3860876.294	137	3614	Grid	750282.6647	3861275.142	144.82
3525	Grid	750291.1056	3860301.194	140	3570	Grid	749868.4994	3860938.618	135.46	3615	Grid	750197.9153	3861307.367	144.44
3526	Grid	750253.5599	3860385.254	140	3571	Grid	750531.0471	3860128.963	163.81	3616	Grid	750113.1658	3861339.591	143.14
3527	Grid	750216.0141	3860469.314	140	3572	Grid	750533.5125	3860035.517	191.19	3617	Grid	750028.4164	3861371.815	134.51
3528	Grid	750178.4684	3860553.374	139	3573	Grid	750535.9779	3859942.071	189.99	3618	Grid	749943.6669	3861404.039	129.49
3529	Grid	750054.8694	3860670.154	138	3574	Grid	750538.4433	3859848.624	197.7	3619	Grid	749858.9175	3861436.263	128.44
3530	Grid	749968.8161	3860702.874	137.32	3575	Grid	750540.9086	3859755.178	194.9	3620	Grid	749774.168	3861468.487	129.57
3531	Grid	749882.7628	3860735.594	137	3576	Grid	750543.374	3859661.732	172.96	3621	Grid	750763.3452	3861055.483	137.64
3532	Grid	749796.7096	3860768.314	136	3577	Grid	750545.8394	3859568.286	187.06	3622	Grid	750606.6768	3861250.744	149.92
3533	Grid	750328.6513	3860217.134	146.87	3578	Grid	750548.3048	3859474.84	207.7	3623	Grid	750439.3509	3861314.366	157.78
3534	Grid	750331.1167	3860123.688	179.09	3579	Grid	750550.7702	3859381.394	216.77	3624	Grid	750272.0251	3861377.988	154.46
3535	Grid	750333.5821	3860030.242	167.43	3580	Grid	750553.2356	3859287.947	221.83	3625	Grid	750104.6992	3861441.61	152.31
3536	Grid	750336.0474	3859936.796	165.73	3581	Grid	750555.701	3859194.501	222.57	3626	Grid	749937.3734	3861505.232	147.09
3537	Grid	750338.5128	3859843.35	170.76	3582	Grid	750558.1663	3859101.055	232.98	3627	Grid	750903.4234	3860968.313	138
3538	Grid	750340.9782	3859749.903	177.21	3583	Grid	750560.6317	3859007.609	245.84	3628	Grid	750831.2201	3861129.967	138.01
3539	Grid	750343.4436	3859656.457	182.81	3584	Grid	750522.9496	3860461.465	139.23	3629	Grid	750676.2733	3861323.082	155.22
3540	Grid	750345.909	3859563.011	179.17	3585	Grid	750452.5514	3860619.078	139	3630	Grid	750510.7862	3861386.005	161.1
3541	Grid	750348.3744	3859469.565	182.79	3586	Grid	750382.1532	3860776.69	138	3631	Grid	750345.2991	3861448.928	159.39
3542	Grid	750350.8398	3859376.119	205.77	3587	Grid	750266.2791	3860886.171	138	3632	Grid	750179.812	3861511.851	158.37
3543	Grid	750353.3051	3859282.673	203.95	3588	Grid	750104.9292	3860947.521	137	3633	Grid	750014.3249	3861574.774	155.86
3544	Grid	750355.7705	3859189.227	204.91	3589	Grid	749943.5793	3861008.871	134.12	3634	Grid	749848.8378	3861637.697	146.88
3545	Grid	750358.2359	3859095.78	232.1	3590	Grid	750519.9249	3860694.684	139	3635	Grid	751006.483	3860964.022	139.61
3546	Grid	750360.7013	3859002.334	244.23	3591	Grid	750450.3958	3860850.35	138	3636	Grid	750934.9674	3861124.136	138.99
3547	Grid	750392.1137	3860301.497	140	3592	Grid	750335.9522	3860958.48	138	3637	Grid	750863.4517	3861284.251	143.08
3548	Grid	750319.1082	3860464.947	139.04	3593	Grid	750176.5943	3861019.072	137	3638	Grid	750745.7384	3861395.47	156.42
3549	Grid	750246.1026	3860628.397	139	3594	Grid	750017.2363	3861079.665	133.18	3639	Grid	750581.8274	3861457.793	163
3550	Grid	750125.9369	3860741.933	138	3595	Grid	749857.8784	3861140.257	129.45	3640	Grid	750417.9163	3861520.117	162.12
3551	Grid	749958.6111	3860805.555	137	3596	Grid	750518.7252	3860923.816	137.98	3641	Grid	750254.0053	3861582.441	161
3552	Grid	750431.0819	3860126.325	177.14	3597	Grid	750405.4261	3861030.864	137	3642	Grid	750090.0943	3861644.764	159.19
3553	Grid	750433.5473	3860032.879	172.39	3598	Grid	750247.6618	3861090.851	136.38	3643	Grid	749926.1832	3861707.088	153.49
3554	Grid	750436.0127	3859939.433	190.15	3599	Grid	750089.8974	3861150.837	134.08	3644	Grid	751124.3272	3860926.631	140
3555	Grid	750438.478	3859845.987	183.67	3600	Grid	749932.133	3861210.824	129.14	3645	Grid	751086.3345	3861011.692	139.01

TABLE C-19: Receptors Locations and Elevations

Receptor		UTMs		ELEV (m)	Receptor		UTMs		ELEV (m)	Receptor		UTMs		ELEV (m)
#	Type	X (m)	Y (m)		#	Type	X (m)	Y (m)		#	Type	X (m)	Y (m)	
3646	Grid	751048.3418	3861096.752	139.12	3691	Grid	751145.1891	3861332.817	146.24	3736	Grid	749752.5468	3862168.311	160
3647	Grid	751010.3491	3861181.813	157.27	3692	Grid	751108.0345	3861416.001	150.32	3737	Grid	749758.4401	3859086.479	244.7
3648	Grid	750972.3564	3861266.874	145	3693	Grid	751070.8799	3861499.186	156.59	3738	Grid	749755.9702	3859186.449	233.87
3649	Grid	750934.3637	3861351.935	147.31	3694	Grid	750948.5684	3861614.749	174.84	3739	Grid	749753.5003	3859286.418	225.27
3650	Grid	750809.2933	3861470.105	160.21	3695	Grid	750863.4115	3861647.128	172.99	3740	Grid	749751.0304	3859386.388	209.36
3651	Grid	750722.2156	3861503.214	163.55	3696	Grid	750778.2546	3861679.507	171.35	3741	Grid	749748.5605	3859486.357	204.91
3652	Grid	750635.1378	3861536.324	165.13	3697	Grid	750693.0977	3861711.886	170.62	3742	Grid	749746.0906	3859586.327	205.76
3653	Grid	750548.0601	3861569.433	165.57	3698	Grid	750607.9408	3861744.265	171.19	3743	Grid	749743.6207	3859686.296	195.47
3654	Grid	750460.9824	3861602.542	164.95	3699	Grid	750522.7839	3861776.644	170.11	3744	Grid	749741.1508	3859786.266	197.35
3655	Grid	750373.9046	3861635.652	161.89	3700	Grid	750437.627	3861809.024	168.25	3745	Grid	749738.6809	3859886.235	194.18
3656	Grid	750286.8269	3861668.761	159.21	3701	Grid	750352.4701	3861841.403	166.22	3746	Grid	749736.211	3859986.205	195.14
3657	Grid	750199.7492	3861701.871	158.02	3702	Grid	750267.3132	3861873.782	164.83	3747	Grid	749733.7411	3860086.174	184.52
3658	Grid	750112.6714	3861734.98	158.09	3703	Grid	750182.1563	3861906.161	164.07	3748	Grid	749731.2712	3860186.144	175.83
3659	Grid	750025.5937	3861768.09	158.06	3704	Grid	750096.9993	3861938.54	163.31	3749	Grid	750547.0018	3860806.481	138
3660	Grid	749938.516	3861801.199	156.45	3705	Grid	750011.8424	3861970.919	161.57	3750	Residential	748145.3923	3856035.935	212.37
3661	Grid	749851.4382	3861834.309	154.65	3706	Grid	749926.6855	3862003.298	160.02	3751	Residential	749982.5037	3855986.389	268.88
3662	Grid	749764.3605	3861867.418	152.85	3707	Grid	749841.5286	3862035.677	159.93	3752	Residential	750008.0833	3855959.005	264.78
3663	Grid	751265.4139	3860837.203	140.84	3708	Grid	749756.3717	3862068.056	159.02	3753	Residential	749701.3263	3855353.695	225.81
3664	Grid	751227.8682	3860921.263	140	3709	Grid	751633.1299	3860064.528	143.21	3754	Residential	749807.59	3855282.83	236.34
3665	Grid	751190.3224	3861005.323	140	3710	Grid	751507.3072	3860748.528	141.45	3755	Residential	749941.29	3855483.39	220.59
3666	Grid	751152.7767	3861089.383	140.57	3711	Grid	751470.4976	3860830.94	141.95	3756	Residential	750008.15	3855508.22	218.6
3667	Grid	751115.231	3861173.443	157.51	3712	Grid	751433.6881	3860913.352	142.7	3757	Residential	750716.79	3855177.78	239.74
3668	Grid	751077.6853	3861257.503	146.57	3713	Grid	751396.8786	3860995.763	144.21	3758	Residential	751151.43	3855485.23	227
3669	Grid	751040.1396	3861341.563	148.92	3714	Grid	751360.0691	3861078.175	144.94	3759	Residential	751215.22	3855565.39	227.84
3670	Grid	751002.5939	3861425.623	155.22	3715	Grid	751323.2595	3861160.587	161.49	3760	Residential	751239.15	3855549.84	228.47
3671	Grid	750878.9949	3861542.403	171.01	3716	Grid	751286.45	3861242.999	161.31	3761	Residential	750347.58	3856701.01	304.84
3672	Grid	750792.9416	3861575.122	169.39	3717	Grid	751249.6405	3861325.41	154.16	3762	Residential	750409.8	3856778.8	314.1
3673	Grid	750706.8883	3861607.842	167.96	3718	Grid	751212.831	3861407.822	147.4	3763	Residential	750488.78	3856723.75	306.02
3674	Grid	750620.835	3861640.562	167.94	3719	Grid	751176.0214	3861490.234	150.93	3764	Residential	750750.85	3856415.02	293.7
3675	Grid	750534.7817	3861673.282	168.06	3720	Grid	751139.2119	3861572.646	159.11	3765	Residential	750749.65	3856282.19	329.77
3676	Grid	750448.7284	3861706.002	164.44	3721	Grid	751018.0364	3861687.136	180.12	3766	Residential	750939.91	3856291.76	305.28
3677	Grid	750362.6751	3861738.722	161.27	3722	Grid	750933.6705	3861719.214	177.21	3767	Residential	751103.85	3856319.29	273
3678	Grid	750276.6218	3861771.442	160.9	3723	Grid	750849.3045	3861751.292	174.51	3768	Residential	751021.29	3856178.08	282.51
3679	Grid	750190.5685	3861804.162	161.39	3724	Grid	750764.9385	3861783.371	173.49	3769	Residential	751301.3	3856352.79	255.95
3680	Grid	750104.5152	3861836.882	161.17	3725	Grid	750680.5725	3861815.449	172.97	3770	Residential	751362.33	3856385.1	261.29
3681	Grid	750018.462	3861869.602	159.92	3726	Grid	750596.2066	3861847.527	172.85	3771	Residential	750393.23	3857208.32	301.29
3682	Grid	749932.4087	3861902.322	158.62	3727	Grid	750511.8406	3861879.606	171.26	3772	Residential	749991.53	3859040.17	252.83
3683	Grid	749846.3554	3861935.042	157.06	3728	Grid	750427.4746	3861911.684	170.43	3773	Residential	749942.9	3859117.41	242.1
3684	Grid	749760.3021	3861967.761	156.06	3729	Grid	750343.1087	3861943.762	168.69	3774	Residential	749799.86	3859351.99	222.41
3685	Grid	751368.1168	3860833.711	141	3730	Grid	750258.7427	3861975.841	167.85	3775	Residential	749977.23	3859460.7	218.87
3686	Grid	751330.9622	3860916.895	141.57	3731	Grid	750174.3767	3862007.919	166.2	3776	Residential	750194.64	3859552.24	210
3687	Grid	751293.8076	3861000.079	140	3732	Grid	750090.0107	3862039.998	165.05	3777	Residential	750197.5	3859886.94	191.33
3688	Grid	751256.653	3861083.264	143.58	3733	Grid	750005.6448	3862072.076	163.13	3778	Residential	751891.05	3859683.83	158.85
3689	Grid	751219.4983	3861166.448	157.05	3734	Grid	749921.2788	3862104.154	161.75	3779	Residential	750394.89	3860184.46	152.39
3690	Grid	751182.3437	3861249.633	156.92	3735	Grid	749836.9128	3862136.233	161.35	3780	Residential	750366.29	3860170.15	156.01

TABLE C-19: Receptors Locations and Elevations

Receptor		UTMs		ELEV (m)	Receptor		UTMs		ELEV (m)	Receptor		UTMs		ELEV (m)
#	Type	X (m)	Y (m)		#	Type	X (m)	Y (m)		#	Type	X (m)	Y (m)	
3781	Residential	750340.54	3860193.04	151	3799	Work	746553.9	3857885.18	178.82	3817	Road	747892.17	3856568.54	191.82
3782	Residential	750094.52	3860218.79	149.06	3800	Work	748567.47	3861547.97	129	3818	Road	747870.61	3856570.34	191.16
3783	Residential	750057.33	3860230.23	150.19	3801	Work	750872.93	3860105.15	145	3819	Road	747856.24	3856572.59	190.76
3784	Residential	750039.7106	3860248.953	148.63	3802	Road	748117.17	3856338.15	194.61	3820	Road	747847.26	3856575.28	190.55
3785	Residential	750011.6	3860307.23	144.01	3803	Road	748098.31	3856357.46	193.32	3821	Road	747831.99	3856582.47	190.28
3786	Residential	749927.12	3860354.2	146.39	3804	Road	748089.32	3856370.49	192.87	3822	Road	747811.93	3856593.78	189.99
3787	Residential	749727.82	3860675.35	136	3805	Road	748077.65	3856388.45	192.24	3823	Road	747793.11	3856605.14	189.74
3788	Residential	748974.59	3861013.98	133	3806	Road	748061.93	3856410.91	192	3824	Road	747772.67	3856618.44	189.48
3789	Residential	748949.99	3860989.38	133	3807	Road	748040.82	3856440.55	192	3825	Road	747757.74	3856628.18	188.87
3790	Residential	748863.89	3860961.27	133	3808	Road	748012.98	3856477.82	192	3826	Road	747733.4	3856641.48	188.4
3791	Residential	748879.71	3861015.74	132.76	3809	Road	747970.76	3856530.37	192.34	3827	Road	747716.85	3856651.54	188.13
3792	Residential	748533.56	3860659.05	153.83	3810	Road	747962.23	3856538.9	192.25	3828	Road	747699.98	3856664.19	187.57
3793	Residential	747298.22	3860355.22	146.05	3811	Road	747951.45	3856549.68	192.23	3829	Road	747686.35	3856677.82	187.13
3794	Residential	748912.69	3859604.02	190.45	3812	Road	747941.57	3856556.87	192.29	3830	Road	747658.01	3856707.42	186.64
3795	Residential	748761.9	3859380.11	225.75	3813	Road	747932.59	3856561.36	192.19	3831	Road	747626.83	3856740.48	186.42
3796	Residential	748757.33	3859009.99	230.91	3814	Road	747925.85	3856564.5	192.05	3832	Road	747597.52	3856765.57	186
3797	Residential	749066.53	3859060.25	193.09	3815	Road	747918.66	3856566.75	191.97	3833	Road	747584.63	3856777.76	186.05
3798	Work	745769.26	3857708.12	197.96	3816	Road	747906.54	3856568.54	191.93	3834	Road	747543.36	3856812.69	185.67

HRA Results

- Table C-20: Summary of HRA Results
- Table C-21: Cancer Risk Driver By Substance – PMI Receptor 197
- Table C-22: Cancer Risk Driver By Substance – MEIR Receptor 3756
- Table C-23: Cancer Risk Driver By Substance – MEIW Receptor 3799
- Table C-24: Chronic Risk Driver By Substance – PMI Receptor 197
- Table C-25: Chronic Risk Driver By Substance – MEIR Receptor 3765
- Table C-26: Chronic Risk Driver By Substance – MEIW Receptor 3799
- Table C-27: 8-HR Chronic Risk Driver By Substance – PMI Receptor 196
- Table C-28: 8-HR Chronic Risk Driver By Substance – MEIR Receptor 3750
- Table C-29: 8-HR Chronic Risk Driver By Substance – MEIW Receptor 3799
- Table C-30: Acute Risk Driver By Substance – PMI Receptor 2151
- Table C-31: Acute Risk Driver By Substance – MEIR Receptor 3750
- Table C-32: Acute Risk Driver By Substance – MEIW Receptor 3799

TABLE C-20: Summary of HRA Results

Initial Run HRA Results				
Cancer Risk	PMI Location		Rec. No.	Result
	UTME	UTMN		
PMI	748126.34	3856562.94	197	9.56E-05
MEIR	750008.15	3855508.22	3756	1.89E-06
MEIW	746553.9	3857885.18	3799	9.54E-08
Chronic Risk	PMI Location		Rec. No.	Result
	UTME	UTMN		
PMI	748126.34	3856562.94	197	5.07E-01
MEIR	750749.65	3856282.19	3765	7.18E-02
MEIW	746553.9	3857885.18	3799	5.34E-03
Chronic 8-Hr Risk	PMI Location		Rec. No.	Result
	UTME	UTMN		
PMI	748174.98	3856563.76	196	8.25E-02
MEIR	748145.39	3856035.93	3750	3.48E-03
MEIW	746553.9	3857885.18	3799	3.40E-03
Acute Risk	PMI Location		Rec. No.	Result
	UTME	UTMN		
PMI	747780.17	3857151.89	2151	5.30E-01
MEIR	748145.39	3856035.93	3750	1.18E-01
MEIW	746553.9	3857885.18	3799	6.72E-02

Second Run HRA Results				
Cancer Risk	PMI Location		Rec. No.	Result
	UTME	UTMN		
PMI	748126.34	3856562.94	197	7.68E-05
MEIR	750008.15	3855508.22	3756	3.78E-06
MEIW	746553.9	3857885.18	3799	9.54E-08
Chronic Risk	PMI Location		Rec. No.	Result
	UTME	UTMN		
PMI	748126.34	3856562.94	197	5.08E-01
MEIR	750749.65	3856282.19	3765	7.29E-02
MEIW	746553.9	3857885.18	3799	5.34E-03
Chronic 8-Hr Risk	PMI Location		Rec. No.	Result
	UTME	UTMN		
PMI	748174.98	3856563.76	196	8.25E-02
MEIR	748145.39	3856035.93	3750	3.48E-03
MEIW	746553.9	3857885.18	3799	3.40E-03
Acute Risk	PMI Location		Rec. No.	Result
	UTME	UTMN		
PMI	747780.17	3857151.89	2151	5.30E-01
MEIR	748145.39	3856035.93	3750	1.18E-01
MEIW	746553.9	3857885.18	3799	6.72E-02

Refined Grid HRA Results				
Cancer Risk	PMI Location		Rec. No.	Result
	UTME	UTMN		
PMI	748150.66	3856563.35	50	1.33E-04

TABLE C-21: Cancer Risk Driver By Substance - PMI Receptor 197

CAS #	Substance	Cancer Risk
106898	Epichlorohydrin	6.30E-05
71432	Benzene	7.52E-06
9901	DieselExhPM	3.18E-06
1151	PAHs-w/o	2.43E-06
100414	Ethyl Benzene	4.12E-07
7440382	Arsenic	1.84E-07
7440439	Cadmium	4.17E-08
50000	Formaldehyde	2.94E-08
7440020	Nickel	4.82E-09
106990	1,3-Butadiene	4.14E-09
75070	Acetaldehyde	2.24E-09
91203	Naphthalene	3.26E-10
106934	EDB	2.86E-10
7440417	Beryllium	2.53E-10
79345	TetraClEthane	2.07E-10
56235	CCl4	1.42E-10
205992	B[b]fluoranthen	1.28E-10
75014	Vinyl Chloride	1.04E-10
218019	Chrysene	5.32E-11
79005	1,1,2TriClEthan	4.68E-11
67663	Chloroform	1.40E-11
75343	1,1-DiClEthane	3.48E-12
75092	Methylene Chlor	1.81E-12

Note: Epichlorohydrin emissions appear to be the greatest driver of cancer risk for the PMI.

TABLE C-22: Cancer Risk Driver By Substance - MEIR Receptor 3756

CAS #	Substance	Cancer Risk
1151	PAHs-w/o	2.42E-06
71432	Benzene	4.86E-07
7440382	Arsenic	4.43E-07
106898	Epichlorohydrin	2.21E-07
7440439	Cadmium	1.03E-07
9901	DieselExhPM	7.25E-08
100414	Ethyl Benzene	1.34E-08
7440020	Nickel	1.19E-08
50000	Formaldehyde	9.15E-09
106990	1,3-Butadiene	1.06E-09
75070	Acetaldehyde	7.44E-10
7440417	Beryllium	6.26E-10
91203	Naphthalene	2.92E-10
106934	EDB	7.30E-11
79345	TetraClEthane	5.27E-11
56235	CCl4	3.62E-11
205992	B[b]fluoranthen	3.31E-11
75014	Vinyl Chloride	2.66E-11
218019	Chrysene	1.38E-11
79005	1,1,2TriClEthan	1.19E-11
67663	Chloroform	3.56E-12
75343	1,1-DiClEthane	8.87E-13
75092	Methylene Chlor	4.60E-13

Note: PAHs emissions appear to be the greatest driver of cancer risk for the MEIR.

TABLE C-23: Cancer Risk Driver By Substance - MEIW Receptor 3799

CAS #	Substance	Cancer Risk
71432	Benzene	5.75E-08
106898	Epichlorohydrin	2.30E-08
9901	DieselExhPM	6.93E-09
7440382	Arsenic	2.80E-09
7440439	Cadmium	1.90E-09
100414	Ethyl Benzene	1.61E-09
1151	PAHs-w/o	1.16E-09
50000	Formaldehyde	2.34E-10
7440020	Nickel	2.19E-10
106990	1,3-Butadiene	2.88E-11
75070	Acetaldehyde	1.86E-11
7440417	Beryllium	1.15E-11
91203	Naphthalene	5.94E-12
106934	EDB	1.99E-12
79345	TetraClEthane	1.44E-12
56235	CCl4	9.88E-13
75014	Vinyl Chloride	7.24E-13
79005	1,1,2TriClEthan	3.25E-13
205992	B[b]fluoranthen	1.80E-13
67663	Chloroform	9.71E-14
218019	Chrysene	7.49E-14
75343	1,1-DiClEthane	2.42E-14
75092	Methylene Chlor	1.25E-14

Note: Benzene emissions appear to be the greatest driver of cancer risk for the MEIW.

TABLE C-24: Chronic Risk Driver By Substance - PMI Receptor 197
Max HI: Respiratory System

CAS #	Substance	Chronic HI
106898	Epichlorohydrin	4.88E-01
7440382	Arsenic	1.48E-02
7783064	H2S	1.81E-03
9901	DieselExhPM	1.07E-03
107028	Acrolein	7.40E-04
7440020	Nickel	7.04E-04
1330207	Xylenes	4.88E-04
50000	Formaldehyde	2.89E-04
7440439	Cadmium	2.59E-04
108883	Toluene	2.47E-04
7440417	Beryllium	8.01E-06
75070	Acetaldehyde	2.97E-06
115071	Propylene	8.14E-07
91203	Naphthalene	5.62E-07

Note: Epichlorohydrin emissions appear to be the greatest driver of chronic risk for the PMI.

TABLE C-25: Chronic Risk Driver By Substance - MEIR Receptor 3765
Max HI: Respiratory System

CAS #	Substance	Chronic HI
7440382	Arsenic	6.68E-02
7440020	Nickel	3.38E-03
7440439	Cadmium	1.24E-03
7783064	H2S	1.13E-03
107028	Acrolein	1.86E-04
50000	Formaldehyde	4.17E-05
7440417	Beryllium	3.85E-05
106898	Epichlorohydrin	3.81E-05
115071	Propylene	3.90E-06
108883	Toluene	2.35E-06
1330207	Xylenes	1.95E-06
91203	Naphthalene	7.89E-07
75070	Acetaldehyde	5.65E-07
9901	DieselExhPM	4.70E-07

Note: Arsenic emissions appear to be the greatest driver of chronic risk for the MEIR.

TABLE C-26: Chronic Risk Driver By Substance - MEIW Receptor 3799
Max HI: Respiratory System

CAS #	Substance	Chronic HI
7440382	Arsenic	1.89E-03
106898	Epichlorohydrin	1.71E-03
7783064	H2S	1.18E-03
7440020	Nickel	3.06E-04
7440439	Cadmium	1.12E-04
107028	Acrolein	6.22E-05
9901	DieselExhPM	2.24E-05
50000	Formaldehyde	2.20E-05
108883	Toluene	1.84E-05
1330207	Xylenes	1.82E-05
7440417	Beryllium	3.48E-06
115071	Propylene	3.54E-07
75070	Acetaldehyde	2.36E-07
91203	Naphthalene	9.77E-08

Note: Arsenic emissions appear to be the greatest driver of chronic risk for the MEIW.

TABLE C-27: 8-HR Chronic Risk Driver By Substance - PMI Receptor 196
Max HI: Blood

CAS #	Substance	8-HR Chronic HI
71432	Benzene	8.25E-02

Note: Benzene emissions appear to be the greatest driver of 8-HR chronic risk for the PMI.

TABLE C-28: 8-HR Chronic Risk Driver By Substance - MEIR Receptor 3750
Max HI: Blood

CAS #	Substance	8-HR Chronic HI
71432	Benzene	3.48E-03

Note: Benzene emissions appear to be the greatest driver of 8-HR chronic risk for the MEIR.

TABLE C-29: 8-HR Chronic Risk Driver By Substance - MEIW Receptor 3799
Max HI: Blood

CAS #	Substance	8-HR Chronic HI
71432	Benzene	3.40E-03

Note: Benzene emissions appear to be the greatest driver of 8-HR chronic risk for the MEIW.

TABLE C-30: Acute Risk Driver By Substance - PMI Receptor 2151
Max HI: Eye

CAS #	Substance	Chronic HI
107028	Acrolein	3.58E-01
50000	Formaldehyde	1.68E-01
75070	Acetaldehyde	3.09E-03
67630	Isopropyl Alcoh	6.39E-04
106898	Epichlorohydrin	5.31E-04
1330207	Xylenes	8.77E-05
7440622	Vanadium	5.94E-05
108883	Toluene	2.03E-05
108952	Phenol	7.15E-07
100425	Styrene	1.94E-07
75014	Vinyl Chloride	1.43E-08

Note: Acrolein emissions appear to be the greatest driver of acute risk for the PMI.

TABLE C-31: Acute Risk Driver By Substance - MEIR Receptor 3750
Max HI: Immune System

CAS #	Substance	Chronic HI
71432	Benzene	1.09E-01
7440020	Nickel	8.83E-03

Note: Benzene emissions appear to be the greatest driver of acute risk for the MEIR.

TABLE C-32: Acute Risk Driver By Substance - MEIW Receptor 3799
Max HI: Central Nervous System

CAS #	Substance	Chronic HI
7783064	H2S	6.62E-02
7440382	Arsenic	6.83E-04
7439976	Mercury	2.96E-04
1330207	Xylenes	5.37E-05
67561	Methanol	4.60E-05
108883	Toluene	9.44E-06
67663	Chloroform	1.46E-06
56235	CCl4	1.49E-07
75092	Methylene Chlor	1.10E-08
75014	Vinyl Chloride	6.38E-10

Note: H2S emissions appear to be the greatest driver of acute risk for the MEIW.

HRA Figures

- Buildings and Structures (Figure C-1)
- All Sources (Figures C-2)
- Central Processing Facility Sources (Figures C-3)
- 1st Run One and ten per Million Cancer Risk Isopleths (Figures C-4)
- 2nd Run One and ten per Million Cancer Risk Isopleths (Figures C-5)
- Acute Non-Cancer Hazard Index Isopleth (Figure C-6)
- 8-hour Chronic Non-Cancer Hazard Index Isopleth (Figure C-7)
- Chronic Non-Cancer Hazard Index Isopleth (Figure C-8)
- Project Boundary Coordinate Points (Figure C-9)

PROJECT TITLE:

AERA SBECC
Buildings and Structures

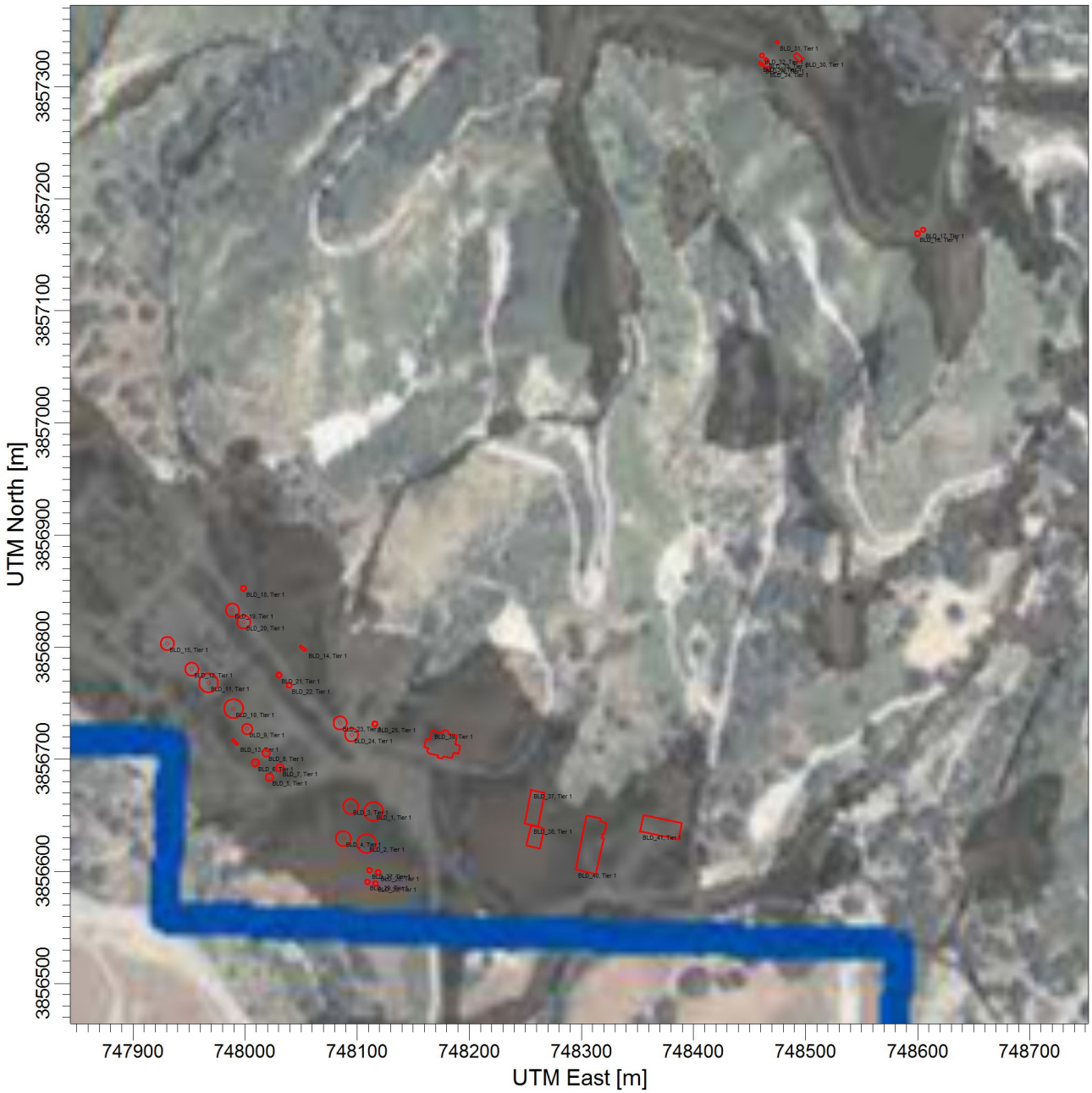

COMMENTS:	SOURCES: **159**		
	RECEPTORS: **3834**		
		SCALE: 1:5,714 0 0.2 km	
			FIGURE NO.: **HRA Figure C-1**

AERMOD View - Lakes Environmental Software

PROJECT TITLE:

AERA SBECC
All Sources

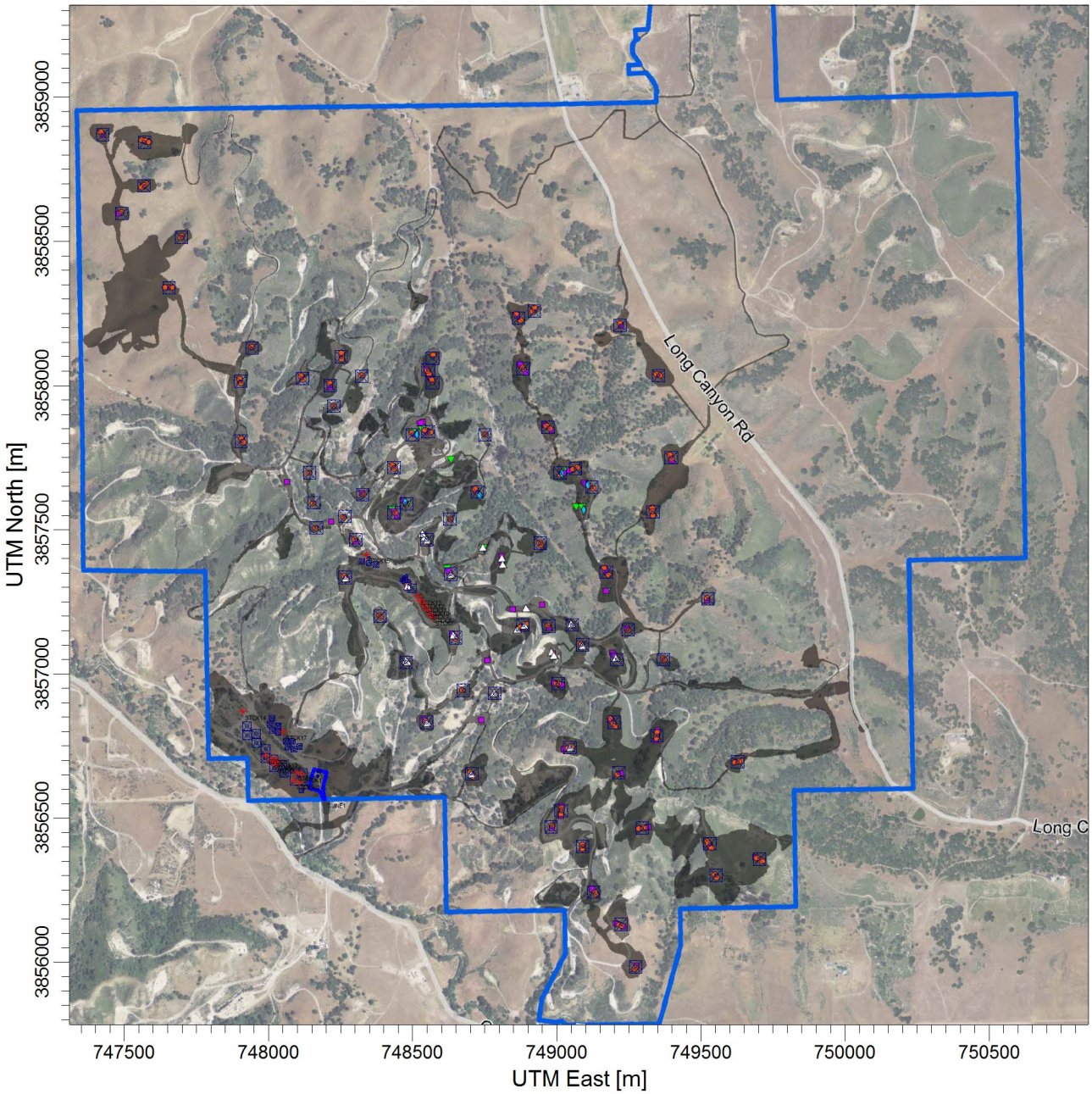

COMMENTS:	SOURCES: **159**		
	RECEPTORS: **3834**		
		SCALE: 1:22,238 0 0.5 km	
			FIGURE NO.: **HRA Figure C-2**

AERMOD View - Lakes Environmental Software

PROJECT TITLE:

AERA SBECC
Central Processing Facility Sources

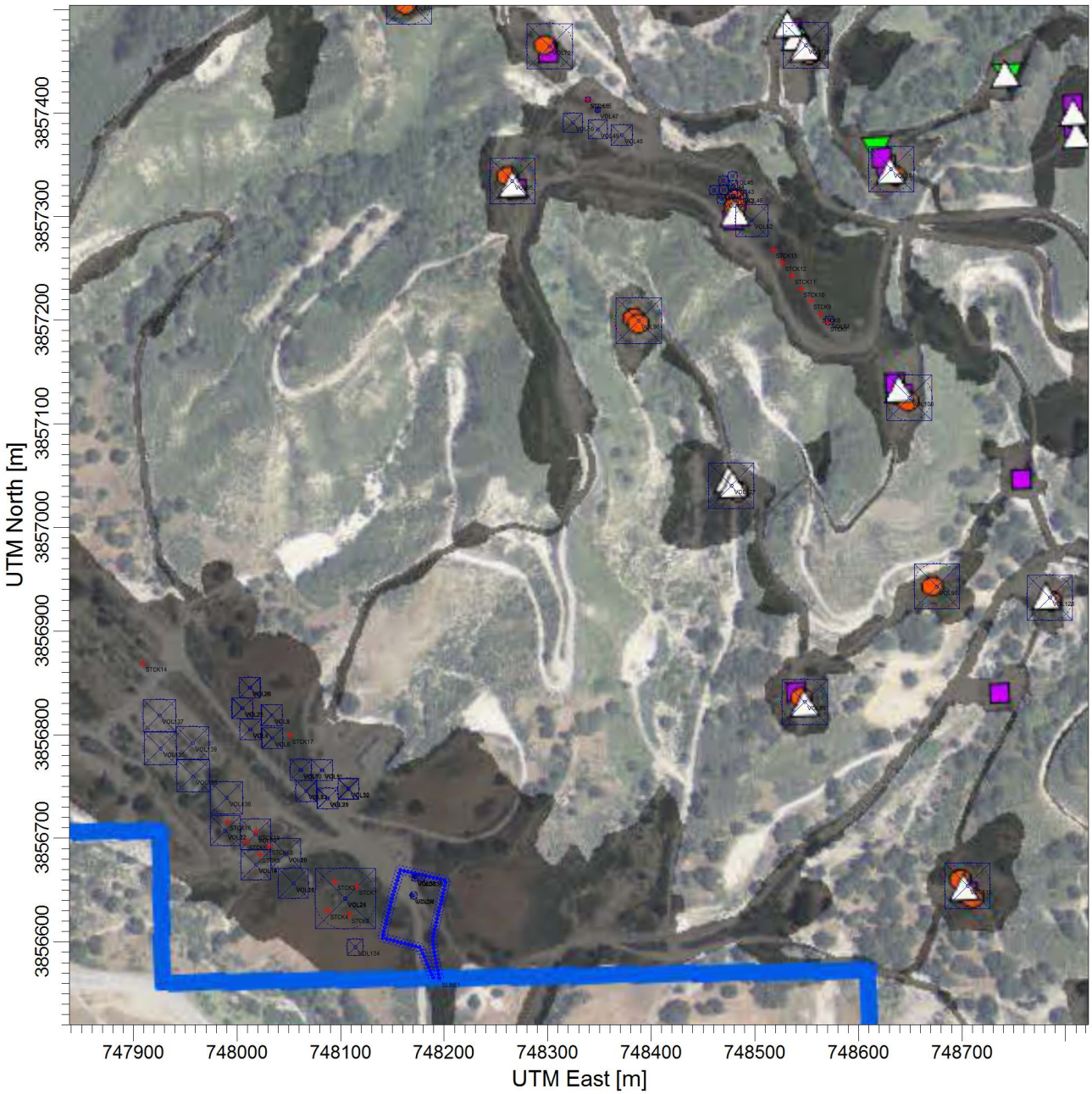

COMMENTS:

SOURCES:

159

RECEPTORS:

3834

SCALE: 1:6,189

0 0.2 km

FIGURE NO.:

HRA Figure C-3

AERMOD View - Lakes Environmental Software

PROJECT TITLE:

Project Cancer Risk (1st Run)
1 Per Million and 10 Per Million Risk Contours

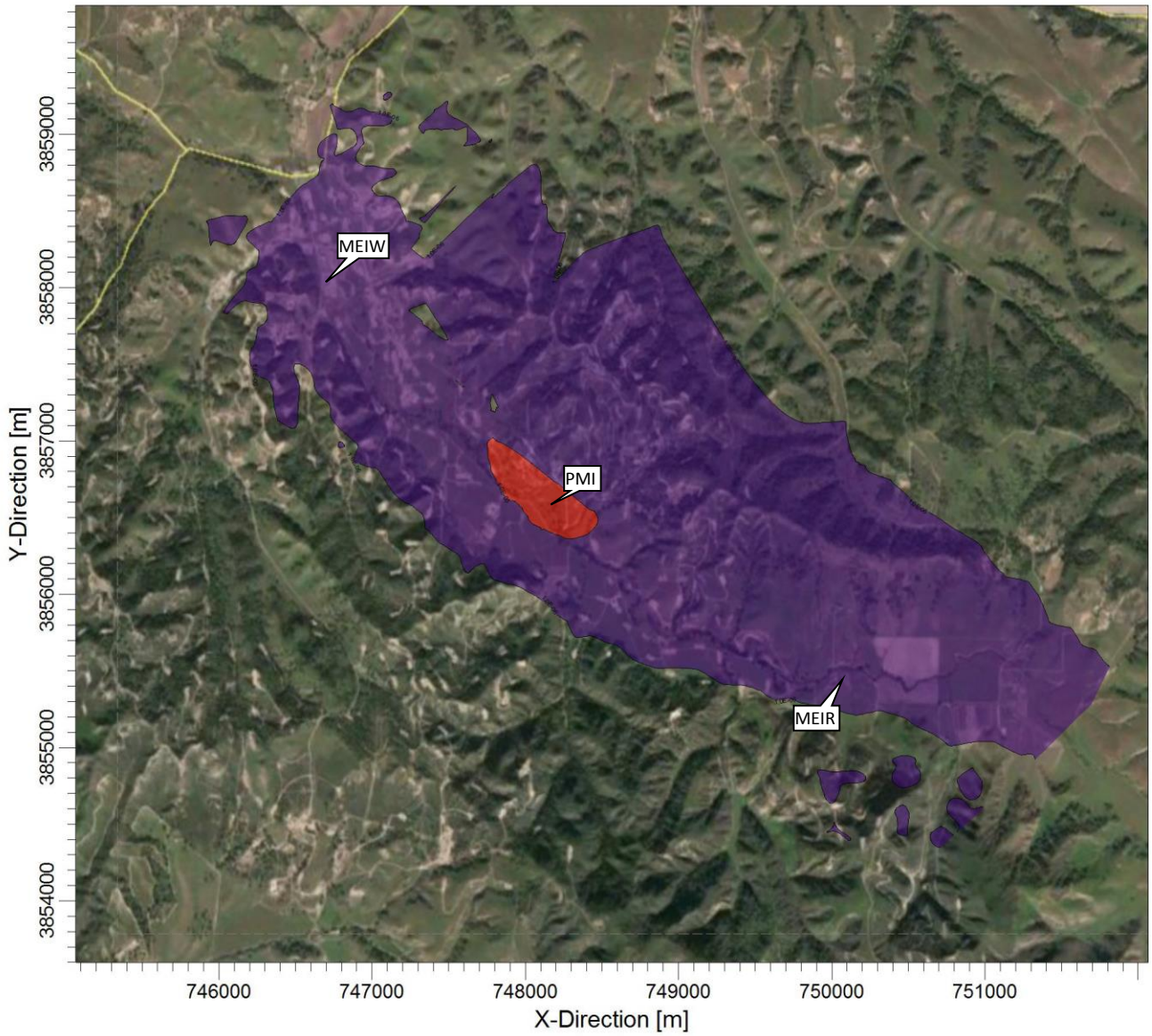

PLOT FILE OF PERIOD VALUES FOR SOURCE GROUP: CANCER

Risk

1.0E-06 1.0E-05

COMMENTS:	MODELING OPTIONS:			
	OUTPUT TYPE: **Cancer Risk**	RECEPTORS: **3834**	SCALE: 1:44,000 0 1 km	
	MAX: **9.56E-005**	UNITS: **Risk**		FIGURE NO.: **HRA Figure C-4**

POST View - Lakes Environmental Software

PROJECT TITLE:

Project Cancer Risk (2nd Run)
1 Per Million and 10 Per Million Risk Contours

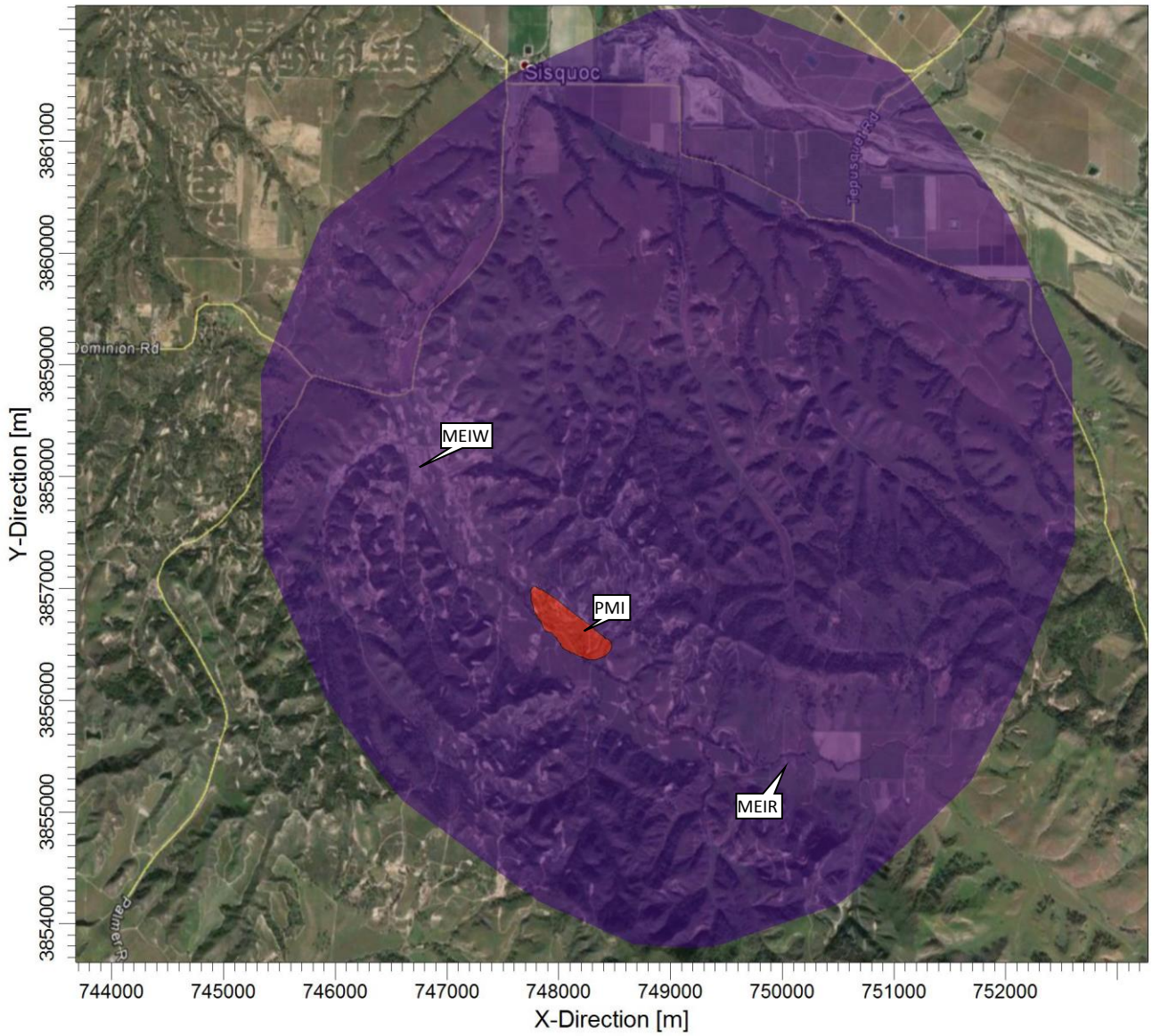

PLOT FILE OF PERIOD VALUES FOR SOURCE GROUP: CANCER

Risk

1.00E-06 — 1.00E-05

COMMENTS:	MODELING OPTIONS:			
	OUTPUT TYPE: **Cancer Risk**	RECEPTORS: **3834**	SCALE: 1:60,332 — 0 2 km	
	MAX: **7.68E-005**	UNITS: **Risk**		FIGURE NO.: **HRA Figure C-5**

POST View - Lakes Environmental Software

PROJECT TITLE:

Project Acute Risk
0.2 HI and 0.4 HI Contours

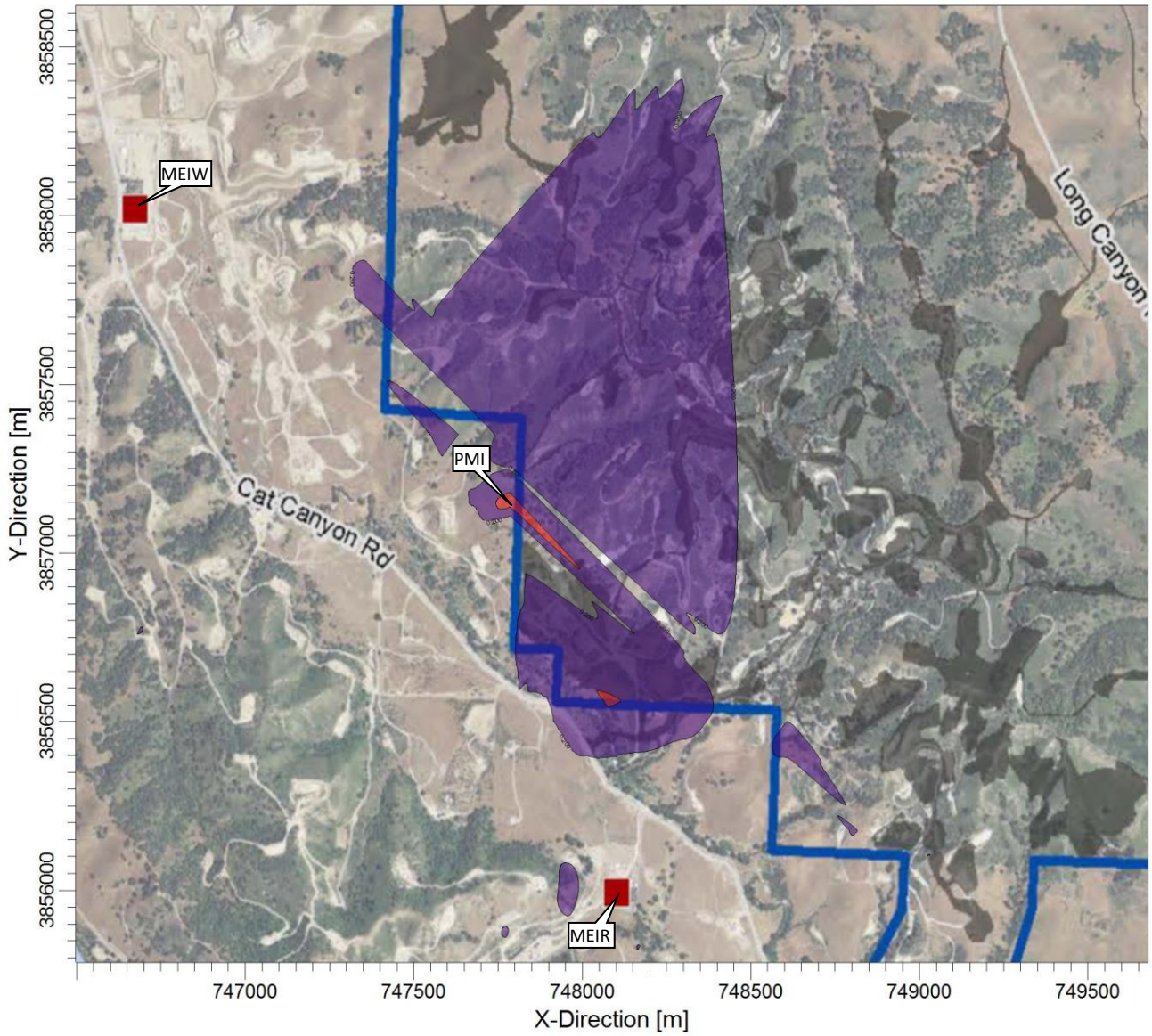

PLOT FILE OF HIGH 1ST HIGH 1-HR VALUES FOR SOURCE GROUP: ACUTE HI

0.200 0.400

COMMENTS:	MODELING OPTIONS:			
	OUTPUT TYPE: **Acute Risk**	RECEPTORS: **3834**	SCALE: 1:20,000 0 0.5 km	
	MAX: **0.53**	UNITS: **HI**		FIGURE NO.: **HRA Figure C-6**

POST View - Lakes Environmental Software

PROJECT TITLE:

Project 8-HR Chronic Risk
0.01 HI and 0.05 HI Contours

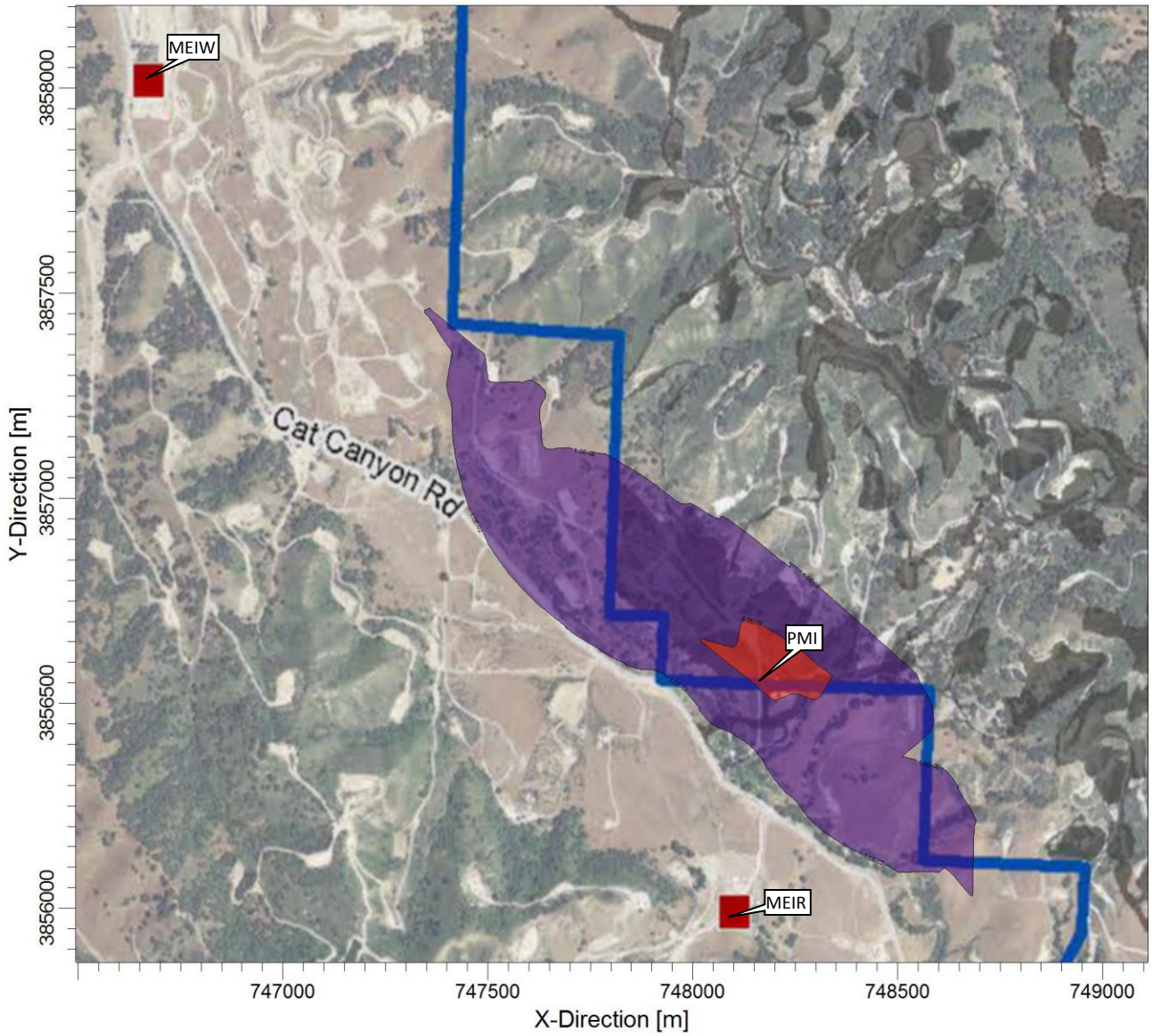

PLOT FILE OF PERIOD VALUES FOR SOURCE GROUP: CHRONIC

HI

1.0E-02 5.0E-02

COMMENTS:	MODELING OPTIONS:			
	OUTPUT TYPE: **8HR Chronic Risk**	RECEPTORS: **3834**	SCALE: 1:16,451 0 0.5 km	
	MAX: **0.0825**	UNITS: **HI**		FIGURE NO.: **HRA Figure C-7**

POST View - Lakes Environmental Software

PROJECT TITLE:

Project Chronic Risk
0.2 HI and 0.4 HI CPntours

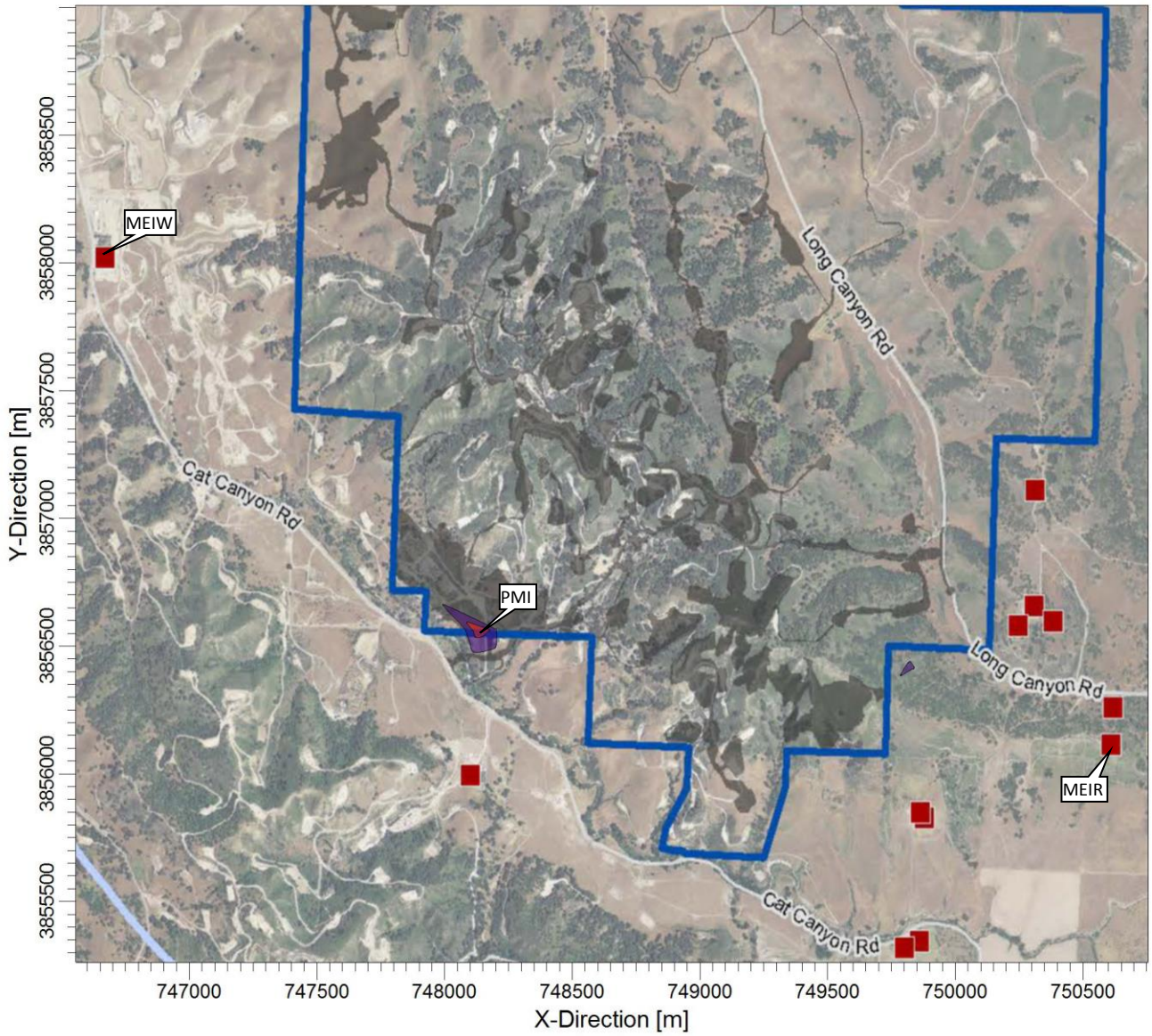

PLOT FILE OF PERIOD VALUES FOR SOURCE GROUP: CHRONIC

HI

0.200 — 0.400

COMMENTS:	MODELING OPTIONS:			
	OUTPUT TYPE: **Chronic Risk**	RECEPTORS: **3834**	SCALE: 1:26,408 0 0.5 km	
	MAX: **0.508**	UNITS: **HI**		FIGURE NO.: **HRA Figure C-8**

POST View - Lakes Environmental Software

Project Title:

AERA SBECC

Project Boundary Coordinate Points

Point #	WGS84 Zone 10 North	
	Easting	Northing
1	749759.45	3858988.87
2	750589.47	3859006.10
3	750623.49	3857404.14
4	750219.46	3857393.03
5	750232.96	3856602.40
6	749820.69	3856592.10
7	749827.24	3856193.76
8	749425.85	3856185.32
9	749427.41	3856058.97
10	749354.00	3855788.68
11	748935.23	3855800.36
12	749026.99	3856033.94
13	749025.32	3856182.43
14	748615.77	3856180.47
15	748609.36	3856571.77
16	747927.64	3856558.78
17	747925.57	3856706.22
18	747791.81	3856705.53
19	747779.62	3857354.26
20	747356.53	3857358.46
21	747335.03	3858948.83
22	749342.55	3858980.92
23	748947.32	3859777.11
24	748936.45	3860178.00
25	749725.03	3860202.99

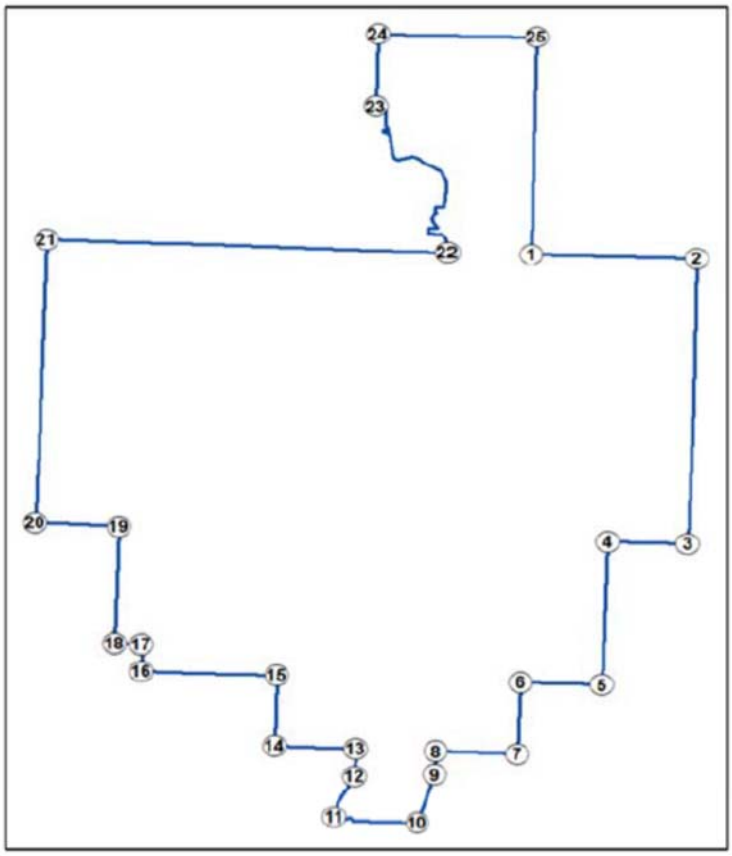

Figure No:

HRA Figure C-9

AERMOD and HARP Modeling Files

(Electronic Files)

ATTACHMENT D

Ambient Air Quality Analysis

- AAQA Project Emissions
  - AAQA Sources
- Emission Rates and Results
  - AAQA Structures
  - AAQA Receptors
  - Modeling Files

AAQA Project Emissions

- Table D-1: Stationary Source Emissions Summary
- Tables D-2: ROC Emissions for Fugitive Gas Service Components
- Tables D-3: ROC Emissions for Fugitive Oil Service Components
- Tables D-4: ROC Emissions for Tanks and Loading Rack

TABLE D-1: AAQA - Stationary Source Emissions Summary

Permit Status	Equipment Description	CO (lb/hr)	CO (lb/8-hr)	NOX (lb/hr)	NOX (lb/yr)	PM10 (lb/yr)	PM10 (lb/day)	PM2.5 (lb/yr)	PM2.5 (lb/day)	SOX (lb/yr)	SOX (lb/day)	SOX (lb/3-hr)	SOX (lb/hr)	ROC (lb/3-hr)
Proposed	85 MM Btu/hr Natural Gas Fired Steam Generator (STCK8)	1.56	12.52	0.51	4,504.83	2,233.80	6.12	2,233.80	6.12	2,122.11	5.81	0.72	0.24	0.41
Proposed	85 MM Btu/hr Natural Gas Fired Steam Generator (STCK9)	1.56	12.52	0.51	4,504.83	2,233.80	6.12	2,233.80	6.12	2,122.11	5.81	0.72	0.24	0.41
Proposed	85 MM Btu/hr Natural Gas Fired Steam Generator (STCK10)	1.56	12.52	0.51	4,504.83	2,233.80	6.12	2,233.80	6.12	2,122.11	5.81	0.72	0.24	0.41
Proposed	62.5 MM Btu/hr Natural Gas Fired Steam Generator (STCK7)	1.15	9.21	0.53	4,637.33	4,161.00	11.40	4,161.00	11.40	6,953.25	19.05	2.38	0.79	0.30
Proposed	Emergency Flare (STCK16) [1]	12.40	18.60	2.72	489.60	144.00	1.20	144.00	1.20	98.50	1.32	1.32	1.32	6.00
Proposed	1,057 Bhp Limited Use Electrical Generator (STCK14) [2]	0.52	4.15	0.17	102.29	4.47	0.18	4.47	0.18	8.49	0.34	0.04	0.01	0.36
Proposed	85 MM Btu/hr Natural Gas Fired Steam Generator (STCK11)	1.56	12.52	0.51	4,504.83	2,233.80	6.12	2,233.80	6.12	2,122.11	5.81	0.73	0.24	0.41
Proposed	85 MM Btu/hr Natural Gas Fired Steam Generator (STCK12)	1.56	12.52	0.51	4,504.83	2,233.80	6.12	2,233.80	6.12	2,122.11	5.81	0.73	0.24	0.41
Proposed	85 MM Btu/hr Natural Gas Fired Steam Generator (STCK13)	1.56	12.52	0.51	4,504.83	2,233.80	6.12	2,233.80	6.12	2,122.11	5.81	0.73	0.24	0.41

1) Flare SOX 24-hour, 3-hour, and 1-hour emissions reflect the worst case emergency flaring scenario. Annual emissions reflect normal operations of 180 hours/year.
2) Electrical Generator emisisons reflect operations of 24 hours/day and 600 hours/year.

TABLE D-2: ROC Emissions for Fugitive Gas Service Components

Component Fugitive Source	Gas Service Components	ROC Emissions Gas Service (lbs/hr)
Flare Gas Fugitives F5910 (VOL55)	24	0.0031
LACT Gas Fugitives 1 (VOL36)	48	0.0063
LACT Gas Fugitives 2 (VOL37)	24	0.0031
LACT Gas Fugitives 3 (VOL38)	0	0.0000
LOS/COS Gas Fugitives (VOL24)	100	0.0793
OCP-CPF Phase 1 Gas Fugitives (VOL4-6)	489	0.0652
OCP-CPF Phase 2 Gas Fugitives (VOL10-12)	427	0.0566
OCP-GS Gas Fugitives (VOL52)	774	0.1079
PGSG Gas Fugitives SG6030 V6050 (VOL51)	141	0.0190
PGTP Gas Fugitives V5880 P5890 P5900 (VOL47)	91	0.0116
PGTP and GS Gas Fugitives FF5030 FF5020 V1210 V1010 V5010 (VOL48)	507	0.0665
PGTP Gas Fugitives P5980 P5990 V5970 V5040 (VOL49)	218	0.0277
PGTP Gas Fugitives V5660 V5670 (VOL50)	220	0.0288
WCP Gas Fugitives Phase 1 (Vol27-28)	121	0.0315
WCP Gas Fugitives Phase 2 (Vol31-32)	121	0.0315
SCP/CPP Gas Fugitives (VOL18-22)	1048	0.1765
Sulferox (VOL39-46)	527	0.0610
Total Gas Fugitive Leaks	**4880**	**0.776**

TABLE D-3: ROC Emissions for Fugitive Oil Service Components

Component Fugitive Source	Oil Service Components	ROC Emissions Oil Service (lbs/hr)
LACT Oil Fugitives 1 (VOL33)	488	0.0023
LACT Oil Fugitives 2 (VOL34)	244	0.0012
LACT Oil Fugitives 3 (VOL35)	72	0.0004
LOS/COS Oil Fugitives (VOL23)	1172	0.0057
OCP-CPF Phase 1 Oil Fugitives (VOL1-3)	720	0.0035
OCP-CPF Phase 2 Oil Fugitives (VOL7-9)	622	0.0030
OCP-GS Oil Fugitives (VOL52)	464	0.0021
PGSG Oil Fugitives SG6030 V6050 (VOL51)	98	0.0005
PGTP Oil Fugitives V5880 P5890 P5900 (VOL47)	48	0.0002
PGTP and GS Oil Fugitives FF5030 FF5020 V1210 V1010 V5010 (VOL48)	196	0.0009
PGTP Oil Fugitives P5980 P5990 V5970 V5040 (VOL49)	48	0.0002
WCP Oil Fugitives Phase 1 (Vol25-26)	728	0.0047
WCP Oil Fugitives Phase 2 (Vol29-30)	728	0.0047
SCP/CPP Oil Fugitives (VOL13-17)	2159	0.0103
Wells Oil Fugitives (VOL56-133)	12383	0.0665
Total Oil Fugitive Leaks	**20170**	**0.106**

TABLE D-4: ROC Emissions for Tanks and Loading Rack

Tank Fugitive Source	ROC Emissions (lbs/hr)
Loading Racks Total (VOL40 & VOL164)	0.481
10,000 BBl Tank (each) (STCK1-2)	0.077
6,500 BBL Tank (Each) (STCK3-4)	0.148
1,000 BBL Skim Tank (each) (STCK5 & 19)	0.017
100 BBL Tank (each) (STCK17-18)	0.0006
1,000 BBL Sludge Tank (each) (STCK6 & 20)	0.007

AAQA Sources

- Table D-5: Project Sources' Locations and Parameters

TABLE D-5: Project Sources' Locations and Parameters

Parameters	Units	Description
Type		POINT, AREA, AREA_CIRC, AREA_POLY, VOLUME, OPEN_PIT, LINE, LINE_VOLUME, LINE_AREA
ID		Source ID up to 12 characters
Desc		Optional description
SourceID_Prefix		Text prefix up to 4 characters long for generated LINE_VOLUME and LINE_AREA sources
Base_Elev	[m]	Source base elevation above mean sea level
Height	[m]	Release height above ground
Diam	[m]	Inner stack diameter (POINT) or circular area radius (AREA_CIRC) / Plume width for LINE_VOLUME source
Exit_Vel	[m/s]	Exit velocity (POINT only)
Exit_Temp	[K]	Exit temperature (POINT only)
Release Type		VERTICAL, HORIZONTAL, CAPPED (POINT only) - HORIZONTAL and CAPPED are non-default beta options / LINE_VOLUME configuration: Separated, Adjacent or Separated2W
SigmaY	[m]	Initial sigma Y (VOLUME only)
SigmaZ	[m]	Initial sigma Z (AREA, AREA_CIRC, AREA_POLY, VOLUME, LINE, and LINE_AREA only; optional for AREA, AREA_CIRC, AREA_POLY, and LINE)
Length_X	[m]	Side length (VOLUME Sources)
X1…n	[m]	X coordinate of source location [m]
Y1…n	[m]	Y coordinate of source location [m]
Base_Elev_m	[m]	Base Elevation for LINE_VOLUME, LINE_AREA Nodes
Rel_Height_m	[m]	Release height for LINE_VOLUME, LINE_AREA Nodes

Type	ID	Desc	Base_Elev	Height	Diam	Exit_Vel	Exit_Temp	Release_Type	SigmaY	SigmaZ	Length_X	X1	Y1
			[m]	[m]	[m]	[m/s]	[K]		[m]	[m]	[m]	[m]	[m]
LINE_VOLUME	SLINE1	Truck Travel	207.96	3.6576	1.83			Separated_Elevated				748140.30	3856603.93
LINE_VOLUME	SLINE1		208.80	3.6576	1.83			Separated_Elevated				748150.79	3856646.45
LINE_VOLUME	SLINE1		209.05	3.6576	1.83			Separated_Elevated				748157.68	3856669.37
LINE_VOLUME	SLINE1		208.26	3.6576	1.83			Separated_Elevated				748176.97	3856594.49
LINE_VOLUME	SLINE1		208.72	3.6576	1.83			Separated_Elevated				748189.15	3856604.95
LINE_VOLUME	SLINE1		205.34	3.6576	1.83			Separated_Elevated				748189.61	3856564.50
LINE_VOLUME	SLINE1		208.94	3.6576	1.83			Separated_Elevated				748189.96	3856591.53
LINE_VOLUME	SLINE1		208.32	3.6576	1.83			Separated_Elevated				748195.52	3856564.50
LINE_VOLUME	SLINE1		209.95	3.6576	1.83			Separated_Elevated				748201.87	3856659.28
LINE_VOLUME	SLINE2	Employee Travel	201.51	0.6096	0.3			Separated_Surfaced Based				748303.68	3856567.46
LINE_VOLUME	SLINE2		212.94	0.6096	0.3			Separated_Surfaced Based				748308.54	3856581.11
LINE_VOLUME	SLINE2		217.12	0.6096	0.3			Separated_Surfaced Based				748326.45	3856581.72
LINE_VOLUME	SLINE2		217.54	0.6096	0.3			Separated_Surfaced Based				748336.16	3856628.46
LINE_VOLUME	SLINE2		217.57	0.6096	0.3			Separated_Surfaced Based				748359.30	3856623.52
POINT	STCK7	62.5 MMBtu SG	313.09	6.10	1.07	8.08	383.15	VERTICAL				748570.32	3857197.65
POINT	STCK8	85 MMBtu SG 1	313.1	6.10	1.22	8.37	402.59	VERTICAL				748562.81	3857205.68
POINT	STCK9	85 MMBtu SG 2	313.11	6.10	1.22	8.37	402.59	VERTICAL				748553.93	3857219.01
POINT	STCK10	85 MMBtu SG 3	313.06	6.10	1.22	8.37	402.59	VERTICAL				748544.48	3857230.29
POINT	STCK11	85 MMBtu SG 4	313.15	6.10	1.22	8.37	402.59	VERTICAL				748536.03	3857243.13
POINT	STCK12	85 MMBtu SG 5	313.23	6.10	1.22	8.37	402.59	VERTICAL				748526.72	3857255.71
POINT	STCK13	85 MMBtu SG 6	313.22	6.10	1.22	8.37	402.59	VERTICAL				748518.01	3857268.28
POINT	STCK14	Generator	211.7	10.00	0.15	27.91	923.15	VERTICAL				747909.48	3856869.22
POINT	STCK15	Emergency Flare	315.58	10.67	1.98	0.69	1033.15	VERTICAL				748338.75	3857412.91
POINT	STCK1	10,000 Barrel 1	208.21	7.32	0.00	0.00	0.00	VERTICAL				748115.48	3856653.49
POINT	STCK2	10,000 Barrel 2	207.83	7.32	0.00	0.00	0.00	VERTICAL				748108.13	3856626.18
POINT	STCK3	6,500 Barrel 1	208.02	7.32	0.00	0.00	0.00	VERTICAL				748094.63	3856658.22
POINT	STCK4	6,500 Barrel 2	207.56	7.32	0.00	0.00	0.00	VERTICAL				748087.55	3856629.82
POINT	STCK5	1,000 BBL Skim Tank 1	208.07	4.88	0.00	0.00	0.00	VERTICAL				748022.07	3856684.46
POINT	STCK6	1,000 BBL Sludge Tank 1	207.56	4.88	0.00	0.00	0.00	VERTICAL				748009.27	3856697.19
POINT	STCK16	100 Barrel 1	207.35	1.83	0.00	0.00	0.00	VERTICAL				747990.75	3856716.04
POINT	STCK17	100 Barrel 2	216.29	1.83	0.00	0.00	0.00	VERTICAL				748051.15	3856799.35
POINT	STCK18	1,000 BBL Skim Tank 2	208.16	4.88	0.00	0.00	0.00	VERTICAL				748031.13	3856692.49
POINT	STCK19	1,000 BBL Sludge Tank 2	208.02	4.88	0.00	0.00	0.00	VERTICAL				748018.46	3856706.30
VOLUME	VOL1	OCP-CPF Phase 1 Oil Fugitives - 1	216.84	1.52					4.71	0.71	20.27	748013.06	3856805.08
VOLUME	VOL23	LOS/COS Oil Fugitives	207.96	1.52					13.50	0.71	58.07	748104.61	3856641.78
VOLUME	VOL29	Phase 2 WCP Oil Fugitives - 1	216.3	1.52					4.65	0.71	20.00	748087.47	3856738.64
VOLUME	VOL33	LACT Oil Fugitives - 1	208.35	1.52					1.42	0.71	6.10	748171.84	3856661.84
VOLUME	VOL36	LACT Gas Fugitives - 1	208.35	4.57					1.42	2.13	6.10	748171.84	3856661.84
VOLUME	VOL131	Well Fugitives	261.52	0.46					10.18	0.21	43.77	747424.46	3858869.62

TABLE D-5: Project Sources' Locations and Parameters

Parameters	Units	Description
Type		POINT, AREA, AREA_CIRC, AREA_POLY, VOLUME, OPEN_PIT, LINE, LINE_VOLUME, LINE_AREA
ID		Source ID up to 12 characters
Desc		Optional description
SourceID_Prefix		Text prefix up to 4 characters long for generated LINE_VOLUME and LINE_AREA sources
Base_Elev	[m]	Source base elevation above mean sea level
Height	[m]	Release height above ground
Diam	[m]	Inner stack diameter (POINT) or circular area radius (AREA_CIRC) / Plume width for LINE_VOLUME source
Exit_Vel	[m/s]	Exit velocity (POINT only)
Exit_Temp	[K]	Exit temperature (POINT only)
Release Type		VERTICAL, HORIZONTAL, CAPPED (POINT only) - HORIZONTAL and CAPPED are non-default beta options / LINE_VOLUME configuration: Separated, Adjacent or Separated2W
SigmaY	[m]	Initial sigma Y (VOLUME only)
SigmaZ	[m]	Initial sigma Z (AREA, AREA_CIRC, AREA_POLY, VOLUME, LINE, and LINE_AREA only; optional for AREA, AREA_CIRC, AREA_POLY, and LINE)
Length_X	[m]	Side length (VOLUME Sources)
X1…n	[m]	X coordinate of source location [m]
Y1…n	[m]	Y coordinate of source location [m]
Base_Elev_m	[m]	Base Elevation for LINE_VOLUME, LINE_AREA Nodes
Rel_Height_m	[m]	Release height for LINE_VOLUME, LINE_AREA Nodes

Type	ID	Desc	Base_Elev	Height	Diam	Exit_Vel	Exit_Temp	Release_Type	SigmaY	SigmaZ	Length_X	X1	Y1
			[m]	[m]	[m]	[m/s]	[K]		[m]	[m]	[m]	[m]	[m]
VOLUME	VOL53	Loading Rack 1	208.14	9.14					0.64	4.25	2.74	748171.55	3856662.66
VOLUME	VOL25	Phase 1 WCP Oil Fugitives - 1	212.13	1.52					4.65	0.71	20.00	748005.19	3856825.50
VOLUME	VOL13	SCP/CPP Oil Fugitives - 1	207.99	1.52					6.73	0.71	28.96	748017.96	3856703.97
VOLUME	VOL18	SCP/CPP Gas Fugitives - 1	207.99	4.57					6.73	2.13	28.96	748017.96	3856703.97
VOLUME	VOL14	SCP/CPP Oil Fugitives - 2	207.03	1.52					6.73	0.71	28.96	748018.27	3856674.50
VOLUME	VOL19	SCP/CPP Gas Fugitives - 2	207.03	4.57					6.73	2.13	28.96	748018.27	3856674.50
VOLUME	VOL39	Sulfurox Gas Fugitives - 1	312.74	4.57					1.97	2.13	8.47	748460.83	3857325.62
VOLUME	VOL47	PGTP All Fugitives V-5880 P-589	315.51	0.46					1.06	0.21	4.57	748348.23	3857403.05
VOLUME	VOL50	PGTP Fugitives V-5670 V-5660	316.85	0.46					4.25	0.21	18.29	748324.24	3857390.70
VOLUME	VOL48	PGTP and GS Fugitives FF-5030 F	316.83	0.46					4.71	0.21	20.24	748371.53	3857378.90
VOLUME	VOL132	Well Fugitives	241.4	0.46					10.18	0.21	43.77	747569.96	3858843.92
VOLUME	VOL133	Well Fugitives	259.08	0.46					10.18	0.21	43.77	747568.82	3858692.54
VOLUME	VOL97	Well Fugitives	262.13	0.46					10.18	0.21	43.77	747490.28	3858596.92
VOLUME	VOL56	Well Fugitives	246.86	0.46					10.18	0.21	43.77	747698.58	3858513.83
VOLUME	VOL57	Well Fugitives	268.22	0.46					10.18	0.21	43.77	747654.19	3858338.54
VOLUME	VOL58	Well Fugitives	289.56	0.46					10.18	0.21	43.77	747942.64	3858129.27
VOLUME	VOL59	Well Fugitives	289.56	0.46					10.18	0.21	43.77	747902.97	3858015.10
VOLUME	VOL60	Well Fugitives	298.7	0.46					10.18	0.21	43.77	747905.87	3857807.07
VOLUME	VOL61	Well Fugitives	262.13	0.46					10.18	0.21	43.77	748117.77	3858024.78
VOLUME	VOL62	Well Fugitives	288.95	0.46					10.18	0.21	43.77	748252.26	3858099.28
VOLUME	VOL63	Well Fugitives	288.95	0.46					10.18	0.21	43.77	748214.53	3857999.62
VOLUME	VOL64	Well Fugitives	276.15	0.46					10.18	0.21	43.77	748226.14	3857928.02
VOLUME	VOL65	Well Fugitives	265.79	0.46					10.18	0.21	43.77	748323.86	3858031.55
VOLUME	VOL66	Well Fugitives	289.56	0.46					10.18	0.21	43.77	748141.96	3857697.73
VOLUME	VOL67	Well Fugitives	296.27	0.46					10.18	0.21	43.77	748157.89	3857593.27
VOLUME	VOL68	Well Fugitives	318.82	0.46					10.18	0.21	43.77	748166.02	3857507.36
VOLUME	VOL69	Well Fugitives	317.42	0.46					10.18	0.21	43.77	748264.70	3857545.67
VOLUME	VOL70	Well Fugitives	326.14	0.46					10.18	0.21	43.77	748301.86	3857464.40
VOLUME	VOL71	Well Fugitives	298.7	0.46					10.18	0.21	43.77	748327.40	3857622.30
VOLUME	VOL72	Well Fugitives	308.46	0.46					10.18	0.21	43.77	748435.37	3857716.34
VOLUME	VOL73	Well Fugitives	298.7	0.46					10.18	0.21	43.77	748499.22	3857828.95
VOLUME	VOL74	Well Fugitives	298.7	0.46					10.18	0.21	43.77	748553.79	3857839.40
VOLUME	VOL75	Well Fugitives	271.88	0.46					10.18	0.21	43.77	748568.88	3858008.90
VOLUME	VOL76	Well Fugitives	271.88	0.46					10.18	0.21	43.77	748553.79	3858054.18
VOLUME	VOL77	Well Fugitives	271.88	0.46					10.18	0.21	43.77	748568.88	3858094.81
VOLUME	VOL78	Well Fugitives	246.89	0.46					10.18	0.21	43.77	748749.99	3857828.95
VOLUME	VOL79	Well Fugitives	260.91	0.46					10.18	0.21	43.77	748724.45	3857631.58
VOLUME	VOL80	Well Fugitives	298.7	0.46					10.18	0.21	43.77	748435.37	3857558.44
VOLUME	VOL81	Well Fugitives	298.7	0.46					10.18	0.21	43.77	748478.32	3857589.79

TABLE D-5: Project Sources' Locations and Parameters

Parameters	Units	Description
Type		POINT, AREA, AREA_CIRC, AREA_POLY, VOLUME, OPEN_PIT, LINE, LINE_VOLUME, LINE_AREA
ID		Source ID up to 12 characters
Desc		Optional description
SourceID_Prefix		Text prefix up to 4 characters long for generated LINE_VOLUME and LINE_AREA sources
Base_Elev	[m]	Source base elevation above mean sea level
Height	[m]	Release height above ground
Diam	[m]	Inner stack diameter (POINT) or circular area radius (AREA_CIRC) / Plume width for LINE_VOLUME source
Exit_Vel	[m/s]	Exit velocity (POINT only)
Exit_Temp	[K]	Exit temperature (POINT only)
Release Type		VERTICAL, HORIZONTAL, CAPPED (POINT only) - HORIZONTAL and CAPPED are non-default beta options / LINE_VOLUME configuration: Separated, Adjacent or Separated2W
SigmaY	[m]	Initial sigma Y (VOLUME only)
SigmaZ	[m]	Initial sigma Z (AREA, AREA_CIRC, AREA_POLY, VOLUME, LINE, and LINE_AREA only; optional for AREA, AREA_CIRC, AREA_POLY, and LINE)
Length_X	[m]	Side length (VOLUME Sources)
X1…n	[m]	X coordinate of source location [m]
Y1…n	[m]	Y coordinate of source location [m]
Base_Elev_m	[m]	Base Elevation for LINE_VOLUME, LINE_AREA Nodes
Rel_Height_m	[m]	Release height for LINE_VOLUME, LINE_AREA Nodes

Type	ID	Desc	Base_Elev	Height	Diam	Exit_Vel	Exit_Temp	Release_Type	SigmaY	SigmaZ	Length_X	X1	Y1
			[m]	[m]	[m]	[m/s]	[K]		[m]	[m]	[m]	[m]	[m]
VOLUME	VOL82	Well Fugitives	295.05	0.46					10.18	0.21	43.77	748629.25	3857536.38
VOLUME	VOL83	Well Fugitives	268.22	0.46					10.18	0.21	43.77	748867.25	3858234.13
VOLUME	VOL84	Well Fugitives	268.22	0.46					10.18	0.21	43.77	748921.82	3858258.51
VOLUME	VOL85	Well Fugitives	271.88	0.46					10.18	0.21	43.77	748883.51	3858058.82
VOLUME	VOL86	Well Fugitives	290.17	0.46					10.18	0.21	43.77	748969.42	3857854.49
VOLUME	VOL87	Well Fugitives	295.66	0.46					10.18	0.21	43.77	749011.21	3857696.60
VOLUME	VOL88	Well Fugitives	295.66	0.46					10.18	0.21	43.77	749064.62	3857711.69
VOLUME	VOL89	Well Fugitives	295.66	0.46					10.18	0.21	43.77	749121.51	3857647.84
VOLUME	VOL90	Well Fugitives	213.36	0.46					10.18	0.21	43.77	749219.47	3858208.77
VOLUME	VOL91	Well Fugitives	225.55	0.46					10.18	0.21	43.77	749352.99	3858034.62
VOLUME	VOL92	Well Fugitives	240.71	0.46					10.18	0.21	43.77	749397.11	3857750.16
VOLUME	VOL93	Well Fugitives	249.94	0.46					10.18	0.21	43.77	749333.26	3857560.91
VOLUME	VOL94	Well Fugitives	269.44	0.46					10.18	0.21	43.77	748941.98	3857452.93
VOLUME	VOL95	Well Fugitives	304.8	0.46					10.18	0.21	43.77	748265.94	3857334.34
VOLUME	VOL96	Well Fugitives	270.66	0.46					10.18	0.21	43.77	748387.85	3857199.65
VOLUME	VOL52	OCP-GS FF-1510 FF-1520 HX-108	315.89	0.46					7.23	0.21	31.10	748497.04	3857296.38
VOLUME	VOL98	Well Fugitives	265.79	0.46					10.18	0.21	43.77	748675.81	3856943.04
VOLUME	VOL99	Well Fugitives	265.79	0.46					10.18	0.21	43.77	748548.09	3856831.57
VOLUME	VOL100	Well Fugitives	306.02	0.46					10.18	0.21	43.77	748649.11	3857125.33
VOLUME	VOL101	Well Fugitives	295.66	0.46					10.18	0.21	43.77	748631.69	3857345.95
VOLUME	VOL102	Well Fugitives	301.26	0.46					10.18	0.21	43.77	748882.49	3857169.46
VOLUME	VOL103	Well Fugitives	321.62	0.46					10.18	0.21	43.77	748971.90	3857164.81
VOLUME	VOL104	Well Fugitives	277.37	0.46					10.18	0.21	43.77	749004.41	3856966.26
VOLUME	VOL105	Well Fugitives	319.52	0.46					10.18	0.21	43.77	749089.17	3857100.95
VOLUME	VOL106	Well Fugitives	321.84	0.46					10.18	0.21	43.77	749208.77	3857049.86
VOLUME	VOL107	Well Fugitives	319.66	0.46					10.18	0.21	43.77	749247.09	3857153.20
VOLUME	VOL108	Well Fugitives	298.7	0.46					10.18	0.21	43.77	749171.61	3857352.91
VOLUME	VOL109	Well Fugitives	307.85	0.46					10.18	0.21	43.77	749524.60	3857260.02
VOLUME	VOL110	Well Fugitives	291.39	0.46					10.18	0.21	43.77	749370.17	3857048.70
VOLUME	VOL111	Well Fugitives	316.99	0.46					10.18	0.21	43.77	749198.32	3856831.57
VOLUME	VOL112	Well Fugitives	313.94	0.46					10.18	0.21	43.77	749348.11	3856786.28
VOLUME	VOL113	Well Fugitives	316.99	0.46					10.18	0.21	43.77	749045.05	3856744.48
VOLUME	VOL114	Well Fugitives	316.99	0.46					10.18	0.21	43.77	749215.74	3856657.40
VOLUME	VOL115	Well Fugitives	240.79	0.46					10.18	0.21	43.77	748705.19	3856654.19
VOLUME	VOL116	Well Fugitives	321.26	0.46					10.18	0.21	43.77	749627.17	3856694.83
VOLUME	VOL117	Well Fugitives	301.75	0.46					10.18	0.21	43.77	749015.23	3856526.46
VOLUME	VOL118	Well Fugitives	301.75	0.46					10.18	0.21	43.77	748980.39	3856469.56
VOLUME	VOL119	Well Fugitives	274.32	0.46					10.18	0.21	43.77	749089.54	3856402.21
VOLUME	VOL120	Well Fugitives	307.85	0.46					10.18	0.21	43.77	749296.24	3856464.92

TABLE D-5: Project Sources' Locations and Parameters

Parameters	Units	Description
Type		POINT, AREA, AREA_CIRC, AREA_POLY, VOLUME, OPEN_PIT, LINE, LINE_VOLUME, LINE_AREA
ID		Source ID up to 12 characters
Desc		Optional description
SourceID_Prefix		Text prefix up to 4 characters long for generated LINE_VOLUME and LINE_AREA sources
Base_Elev	[m]	Source base elevation above mean sea level
Height	[m]	Release height above ground
Diam	[m]	Inner stack diameter (POINT) or circular area radius (AREA_CIRC) / Plume width for LINE_VOLUME source
Exit_Vel	[m/s]	Exit velocity (POINT only)
Exit_Temp	[K]	Exit temperature (POINT only)
Release Type		VERTICAL, HORIZONTAL, CAPPED (POINT only) - HORIZONTAL and CAPPED are non-default beta options / LINE_VOLUME configuration: Separated, Adjacent or Separated2W
SigmaY	[m]	Initial sigma Y (VOLUME only)
SigmaZ	[m]	Initial sigma Z (AREA, AREA_CIRC, AREA_POLY, VOLUME, LINE, and LINE_AREA only; optional for AREA, AREA_CIRC, AREA_POLY, and LINE)
Length_X	[m]	Side length (VOLUME Sources)
X1…n	[m]	X coordinate of source location [m]
Y1…n	[m]	Y coordinate of source location [m]
Base_Elev_m	[m]	Base Elevation for LINE_VOLUME, LINE_AREA Nodes
Rel_Height_m	[m]	Release height for LINE_VOLUME, LINE_AREA Nodes

Type	ID	Desc	Base_Elev	Height	Diam	Exit_Vel	Exit_Temp	Release_Type	SigmaY	SigmaZ	Length_X	X1	Y1
			[m]	[m]	[m]	[m/s]	[K]		[m]	[m]	[m]	[m]	[m]
VOLUME	VOL121	Well Fugitives	307.85	0.46					10.18	0.21	43.77	749530.80	3856410.34
VOLUME	VOL122	Well Fugitives	307.85	0.46					10.18	0.21	43.77	749702.65	3856357.05
VOLUME	VOL123	Well Fugitives	295.66	0.46					10.18	0.21	43.77	749552.58	3856300.79
VOLUME	VOL125	Well Fugitives	265.79	0.46					10.18	0.21	43.77	749223.33	3856131.38
VOLUME	VOL126	Well Fugitives	262.13	0.46					10.18	0.21	43.77	749127.70	3856243.41
VOLUME	VOL127	Well Fugitives	260.3	0.46					10.18	0.21	43.77	748477.29	3857040.28
VOLUME	VOL128	Well Fugitives	254.2	0.46					10.18	0.21	43.77	748784.84	3856932.24
VOLUME	VOL129	Well Fugitives	317.91	0.46					10.18	0.21	43.77	749053.06	3857169.50
VOLUME	VOL130	Well Fugitives	304.8	0.46					10.18	0.21	43.77	748549.01	3857465.27
VOLUME	VOL40	Sulfurox Gas Fugitives - 2	312.73	4.57					1.97	2.13	8.47	748468.04	3857317.05
VOLUME	VOL41	Sulfurox Gas Fugitives - 3	312.6	4.57					1.97	2.13	8.47	748469.97	3857326.10
VOLUME	VOL42	Sulfurox GasFugitives - 4	312.75	4.57					1.97	2.13	8.47	748479.02	3857321.10
VOLUME	VOL43	Sulfurox Gas Fugitives - 5	312.92	4.57					1.97	2.13	8.47	748479.02	3857330.34
VOLUME	VOL44	Sulfurox Gas Fugitives - 6	312.62	4.57					1.97	2.13	8.47	748469.77	3857334.77
VOLUME	VOL45	Sulfurox Gas Fugitives - 7	312.82	4.57					1.97	2.13	8.47	748478.63	3857339.20
VOLUME	VOL46	Sulfurox Gas Fugitives - 8	313.1	4.57					1.97	2.13	8.47	748487.69	3857321.48
VOLUME	VOL26	Phase 1 WCP Oil Fugitives - 2	217.03	1.52					4.65	0.71	20.00	748012.29	3856845.60
VOLUME	VOL2	OCP-CPF Phase 1 Oil Fugitives - 2	216.29	1.52					4.71	0.71	20.27	748033.67	3856818.81
VOLUME	VOL3	OCP-CPF Phase 1 Oil Fugitives - 3	218.35	1.52					4.71	0.71	20.27	748034.20	3856796.67
VOLUME	VOL7	OCP-CPF Phase 2 Oil Fugitives - 1	217.02	1.52					4.71	0.71	20.27	748061.70	3856765.97
VOLUME	VOL8	OCP-CPF Phase 2 Oil Fugitives - 2	216.23	1.52					4.71	0.71	20.27	748066.84	3856745.64
VOLUME	VOL9	OCP-CPF Phase 2 Oil Fugitives - 3	216.41	1.52					4.71	0.71	20.27	748082.21	3856765.84
VOLUME	VOL30	Phase 2 WCP Oil Fugitives - 2	216.29	1.52					4.65	0.71	20.00	748107.68	3856747.78
VOLUME	VOL15	SCP/CPP Oil Fugitives - 3	207.92	1.52					6.73	0.71	28.96	748047.15	3856685.20
VOLUME	VOL20	SCP/CPP Gas Fugitives - 3	207.92	4.57					6.73	2.13	28.96	748047.15	3856685.20
VOLUME	VOL34	LACT Oil Fugitives - 2	209.15	1.52					1.42	0.71	6.10	748170.62	3856644.82
VOLUME	VOL37	LACT Gas Fugitives - 2	209.15	4.57					1.42	2.13	6.10	748170.62	3856644.82
VOLUME	VOL35	LACT Oil Fugitives - 3	207.84	1.52					1.42	0.71	6.10	748178.37	3856661.97
VOLUME	VOL38	LACT Gas Fugitives - 3	207.84	4.57					1.42	2.13	6.10	748178.37	3856661.97
VOLUME	VOL55	Flare Gas Fugitives F5910	315.58	0.46					1.06	0.21	4.57	748338.89	3857413.01
VOLUME	VOL49	PGTP Fugitives P-5980 P-5990 V-	316.75	0.46					4.25	0.21	18.29	748348.35	3857384.18
VOLUME	VOL54	Loading Rack 2	209.13	9.14					0.64	4.25	2.74	748168.80	3856645.11
VOLUME	VOL124	Well Fugitives	246.89	0.46					10.18	0.21	43.77	749273.88	3855983.83
VOLUME	VOL27	Phase 1 WCP Gas Fugitives - 1	212.13	4.57					4.65	2.13	20.00	748005.07	3856825.56
VOLUME	VOL28	Phase 1 WCP Gas Fugitives - 2	217.18	4.57					4.65	2.13	20.00	748012.47	3856845.48
VOLUME	VOL4	OCP-CPF Phase 1 Gas Fugitives -	216.84	4.57					4.71	2.13	20.27	748012.94	3856805.05
VOLUME	VOL5	OCP-CPF Phase 1 Gas Fugitives -	216.29	4.57					4.71	2.13	20.27	748033.52	3856818.78
VOLUME	VOL6	OCP-CPF Phase 1 Gas Fugitives -	218.35	4.57					4.71	2.13	20.27	748034.06	3856796.64
VOLUME	VOL10	OCP-CPF Phase 2 Gas Fugitives -	217.02	4.57					4.71	2.13	20.27	748061.55	3856765.94

TABLE D-5: Project Sources' Locations and Parameters

Parameters	Units	Description
Type		POINT, AREA, AREA_CIRC, AREA_POLY, VOLUME, OPEN_PIT, LINE, LINE_VOLUME, LINE_AREA
ID		Source ID up to 12 characters
Desc		Optional description
SourceID_Prefix		Text prefix up to 4 characters long for generated LINE_VOLUME and LINE_AREA sources
Base_Elev	[m]	Source base elevation above mean sea level
Height	[m]	Release height above ground
Diam	[m]	Inner stack diameter (POINT) or circular area radius (AREA_CIRC) / Plume width for LINE_VOLUME source
Exit_Vel	[m/s]	Exit velocity (POINT only)
Exit_Temp	[K]	Exit temperature (POINT only)
Release Type		VERTICAL, HORIZONTAL, CAPPED (POINT only) - HORIZONTAL and CAPPED are non-default beta options / LINE_VOLUME configuration: Separated, Adjacent or Separated2W
SigmaY	[m]	Initial sigma Y (VOLUME only)
SigmaZ	[m]	Initial sigma Z (AREA, AREA_CIRC, AREA_POLY, VOLUME, LINE, and LINE_AREA only; optional for AREA, AREA_CIRC, AREA_POLY, and LINE)
Length_X	[m]	Side length (VOLUME Sources)
X1…n	[m]	X coordinate of source location [m]
Y1…n	[m]	Y coordinate of source location [m]
Base_Elev_m	[m]	Base Elevation for LINE_VOLUME, LINE_AREA Nodes
Rel_Height_m	[m]	Release height for LINE_VOLUME, LINE_AREA Nodes

Type	ID	Desc	Base_Elev	Height	Diam	Exit_Vel	Exit_Temp	Release_Type	SigmaY	SigmaZ	Length_X	X1	Y1
			[m]	[m]	[m]	[m/s]	[K]		[m]	[m]	[m]	[m]	[m]
VOLUME	VOL11	OCP-CPF Phase 2 Gas Fugitives -	216.41	4.57					4.71	2.13	20.27	748082.07	3856765.81
VOLUME	VOL12	OCP-CPF Phase 2 Gas Fugitives -	216.23	4.57					4.71	2.13	20.27	748066.70	3856745.61
VOLUME	VOL31	Phase 2 WCP Gas Fugitives - 1	216.3	4.57					4.65	2.13	20.00	748087.36	3856738.46
VOLUME	VOL32	Phase 2 WCP Gas Fugitives - 2	216.29	4.57					4.65	2.13	20.00	748107.58	3856747.60
VOLUME	VOL24	LOS/COS Gas Fugitives	207.96	4.57					13.50	2.13	58.07	748104.49	3856641.93
VOLUME	VOL16	SCP/CPP Oil Fugitives - 4	207.28	1.52					6.73	0.71	28.96	748054.45	3856656.39
VOLUME	VOL21	SCP/CPP Gas Fugitives - 4	207.28	4.57					6.73	2.13	28.96	748054.45	3856656.39
VOLUME	VOL17	SCP/CPP Oil Fugitives - 5	207.26	1.52					6.73	0.71	28.96	747988.77	3856707.16
VOLUME	VOL22	SCP/CPP Gas Fugitives - 5	207.26	4.57					6.73	2.13	28.96	747988.77	3856707.16
VOLUME	VOL51	PGSG Fugitives SG-6030 V-6050	313.19	0.46					1.85	0.21	7.94	748571.97	3857199.92

Emission Rates and Results

- Table D-6: Ambient Air Quality Assessment Emissions Excluding ROC
- Table D-7: Ambient Air Quality Assessment Results
- Table D-8: Class I Ambient Air Quality Incremental Analysis Results
- Table D-9: ROC Ambient Air Quality Emission

TABLE D-6: Ambient Air Quality Assessment Emission Excluding ROC (g/sec)

Device	NOx 1 Hour	NOx Annual	CO 1 Hour	CO 8 Hour	SOx 1 Hour	SOx 3 Hour	SOx 24 Hour	SOx Annual	PM10 24 Hour	PM10 Annual	PM2.5 24 Hour	PM2.5 Annual
SLINE1	4.91E-04	3.08E-04	1.71E-04	1.71E-04	7.50E-06	7.50E-06	5.75E-06	5.75E-06	5.42E-05	4.16E-05	2.09E-05	1.58E-05
SLINE2	2.17E-04	2.72E-05	1.97E-03	1.97E-03	8.15E-06	8.15E-06	1.01E-06	1.01E-06	1.74E-04	2.17E-05	7.13E-05	8.92E-06
STCK10	6.48E-02	6.48E-02	1.97E-01	1.97E-01	3.05E-02	3.05E-02	3.05E-02	3.05E-02	3.21E-02	3.21E-02	3.21E-02	3.21E-02
STCK11	6.48E-02	6.48E-02	1.97E-01	1.97E-01	3.05E-02	3.05E-02	3.05E-02	3.05E-02	3.21E-02	3.21E-02	3.21E-02	3.21E-02
STCK12	6.48E-02	6.48E-02	1.97E-01	1.97E-01	3.05E-02	3.05E-02	3.05E-02	3.05E-02	3.21E-02	3.21E-02	3.21E-02	3.21E-02
STCK13	6.48E-02	6.48E-02	1.97E-01	1.97E-01	3.05E-02	3.05E-02	3.05E-02	3.05E-02	3.21E-02	3.21E-02	3.21E-02	3.21E-02
STCK14	2.14E-02	1.47E-03	6.55E-02	6.55E-02	1.76E-03	1.78E-03	1.78E-03	1.22E-04	9.45E-04	6.43E-05	9.45E-04	6.43E-05
STCK15	3.43E-01	7.04E-03	1.56E+00	2.93E-01	1.66E-01	5.54E-02	6.93E-03	1.42E-03	6.30E-03	2.07E-03	6.30E-03	2.07E-03
STCK7	6.68E-02	6.67E-02	1.45E-01	1.45E-01	9.95E-02	1.00E-01	1.00E-01	1.00E-01	5.98E-02	5.98E-02	5.98E-02	5.98E-02
STCK8	6.48E-02	6.48E-02	1.97E-01	1.97E-01	3.05E-02	3.05E-02	3.05E-02	3.05E-02	3.21E-02	3.21E-02	3.21E-02	3.21E-02
STCK9	6.48E-02	6.48E-02	1.97E-01	1.97E-01	3.05E-02	3.05E-02	3.05E-02	3.05E-02	3.21E-02	3.21E-02	3.21E-02	3.21E-02

TABLE D-7: Ambient Air Quality Assessment Results (ug/m3)

Source	NOx 1 Hour	NOx Annual	CO 1 Hour	CO 8 Hour	SOx 1 Hour	SOx 3 Hour	SOx 24 Hour	SOx Annual	PM10 24 Hour	PM10 Annual	PM2.5 24 Hour	PM2.5 Annual
All Sources	5.73E+01	4.44E-01	2.03E+02	2.31E+01	3.34E+01	1.31E+01	1.96E+00	2.90E-01	1.68E+00	2.51E-01	1.68E+00	2.51E-01
Background	9.22E+01	1.44E+01	3.89E+03	1.31E+03	1.31E+01	1.18E+01	5.24E+00	2.33E+00	7.62E+01	2.42E+01	1.73E+01	7.00E+00
Facility Totals	149.45	14.87	4095.91	1328.36	46.45	24.89	7.20	2.62	77.88	24.45	18.98	7.25
AAQS	188.68	100	23000	10000	196	1300	105	80	50	20	35	12
	Pass	**Pass**	**Pass**	**Pass**	**Pass**	**Pass**	**Pass**	**Pass**	**Fail**	**Fail**	**Pass**	**Pass**

Facility Only Total:	1.68	0.25
PSD Threshold:	5	1
Paas/Fail:	**Pass**	**Pass**

TABLE D-8: Class I Ambient Air Quality Increment Analysis Results (ug/m3)

Source	NOx 1 Hour	NOx Annual	CO 1 Hour	CO 8 Hour	SOx 1 Hour	SOx 3 Hour	SOx 24 Hour	SOx Annual	PM10 24 Hour	PM10 Annual	PM2.5 24 Hour	PM2.5 Annual	TSP 24 Hour	TSP Annual	ROC 3 Hour
All Sources	9.24E+00	1.20E-02	3.40E+01	2.33E+00	5.35E+00	1.36E+00	1.53E-01	7.73E-03	1.32E-01	6.74E-03	1.32E-01	6.74E-03	1.32E-01	6.74E-03	1.86E+00
Facility Totals	9.24	0.01	34.03	2.33	5.35	1.36	0.15	0.008	0.13	0.007	0.13	0.007	0.13	0.007	1.86
Increment Thresho	10	2.5	800	200	NA	25	5	2	8	4	8	4	10	5	3
	Pass	**Pass**	**Pass**	**Pass**	**Pass**	**Pass**	**Pass**	**Pass**	**Pass**	**Pass**	**Pass**	**Pass**	**Pass**	**Pass**	**Pass**

TABLE D-9: ROC Ambient Air Quality Emission (g/sec)

Source	ROC 3 Hour	Source	ROC 3 Hour	Source	ROC 3 Hour	Source	ROC 3 Hour
SLINE1	2.95E-05	VOL115	1.07E-04	VOL30	2.95E-04	VOL66	1.07E-04
SLINE2	3.62E-05	VOL116	1.07E-04	VOL31	1.99E-03	VOL67	1.07E-04
STCK1	9.65E-03	VOL117	1.07E-04	VOL32	1.99E-03	VOL68	1.07E-04
STCK10	1.71E-02	VOL118	1.07E-04	VOL33	2.91E-04	VOL69	1.07E-04
STCK11	1.71E-02	VOL119	1.07E-04	VOL34	1.45E-04	VOL7	1.26E-04
STCK12	1.71E-02	VOL12	2.38E-03	VOL35	4.54E-05	VOL70	1.07E-04
STCK13	1.71E-02	VOL120	1.07E-04	VOL36	7.89E-04	VOL71	1.07E-04
STCK14	1.49E-02	VOL121	1.07E-04	VOL37	3.94E-04	VOL72	1.07E-04
STCK15	2.52E-01	VOL122	1.07E-04	VOL38	0.00E+00	VOL73	1.07E-04
STCK16	7.31E-05	VOL123	1.07E-04	VOL39	9.61E-04	VOL74	1.07E-04
STCK17	7.31E-05	VOL124	1.07E-04	VOL4	2.74E-03	VOL75	1.07E-04
STCK18	2.18E-03	VOL125	1.07E-04	VOL40	9.61E-04	VOL76	1.07E-04
STCK19	8.25E-04	VOL126	1.07E-04	VOL41	9.61E-04	VOL77	1.07E-04
STCK2	9.65E-03	VOL127	1.07E-04	VOL42	9.61E-04	VOL78	1.07E-04
STCK3	1.87E-02	VOL128	1.07E-04	VOL43	9.61E-04	VOL79	1.07E-04
STCK4	1.87E-02	VOL129	1.07E-04	VOL44	9.61E-04	VOL8	1.26E-04
STCK5	2.18E-03	VOL13	2.59E-04	VOL45	9.61E-04	VOL80	1.07E-04
STCK6	8.25E-04	VOL130	1.07E-04	VOL46	9.61E-04	VOL81	1.07E-04
STCK7	1.26E-02	VOL131	1.07E-04	VOL47	1.50E-03	VOL82	1.07E-04
STCK8	1.71E-02	VOL132	1.07E-04	VOL48	8.50E-03	VOL83	1.07E-04
STCK9	1.71E-02	VOL133	1.07E-04	VOL49	3.52E-03	VOL84	1.07E-04
VOL1	1.45E-04	VOL14	2.59E-04	VOL5	2.74E-03	VOL85	1.07E-04
VOL10	2.38E-03	VOL15	2.59E-04	VOL50	3.63E-03	VOL86	1.07E-04
VOL100	1.07E-04	VOL16	2.59E-04	VOL51	2.45E-03	VOL87	1.07E-04
VOL101	1.07E-04	VOL17	2.59E-04	VOL52	1.39E-02	VOL88	1.07E-04
VOL102	1.07E-04	VOL18	4.45E-03	VOL53	3.03E-02	VOL89	1.07E-04
VOL103	1.07E-04	VOL19	4.45E-03	VOL54	3.03E-02	VOL9	1.26E-04
VOL104	1.07E-04	VOL2	1.45E-04	VOL55	3.94E-04	VOL90	1.07E-04
VOL105	1.07E-04	VOL20	4.45E-03	VOL56	1.07E-04	VOL91	1.07E-04
VOL106	1.07E-04	VOL21	4.45E-03	VOL57	1.07E-04	VOL92	1.07E-04
VOL107	1.07E-04	VOL22	4.45E-03	VOL58	1.07E-04	VOL93	1.07E-04
VOL108	1.07E-04	VOL23	7.21E-04	VOL59	1.07E-04	VOL94	1.07E-04
VOL109	1.07E-04	VOL24	9.99E-03	VOL6	2.74E-03	VOL95	1.07E-04
VOL11	2.38E-03	VOL25	2.95E-04	VOL60	1.07E-04	VOL96	1.07E-04
VOL110	1.07E-04	VOL26	2.95E-04	VOL61	1.07E-04	VOL97	1.07E-04
VOL111	1.07E-04	VOL27	1.99E-03	VOL62	1.07E-04	VOL98	1.07E-04
VOL112	1.07E-04	VOL28	1.99E-03	VOL63	1.07E-04	VOL99	1.07E-04
VOL113	1.07E-04	VOL29	2.95E-04	VOL64	1.07E-04		
VOL114	1.07E-04	VOL3	1.45E-04	VOL65	1.07E-04		

AAQA Structures

- Table D-10: Structure Parameters Used to Calculate Building Downwash

TABLE D-10: Structure Parameters Used to Calculate Building Downwash

AERMOD ID	Description	Elevation (m)	Tier Height (m)	Type	Circular			Rectangular					Polygonal		
					Center Point (m)		Diameter (m)	Reference Point (SW Corner) (m)		Side Lengths (m)		Rotational Angle (deg)	# of Nodes	Node Coordinates (m)	
					x	y		x	y	x	y			x	y
BLD_1	10,000 BBL Tank	208.21	7.32	Circular	748114.7	3856653.53	16.76								
BLD_2	10,000 BBL Tank	207.81	7.32	Circular	748108.63	3856624.97	16.76								
BLD_3	6,500 BBL Tank	207.97	7.32	Circular	748094.28	3856657.93	13.41								
BLD_4	6,500 BBL Tank	207.56	7.32	Circular	748087.71	3856629.33	13.41								
BLD_5	1,000 BBl Tank	208.07	4.88	Circular	748021.82	3856683.99	6.55								
BLD_6	1,000 BBL Tank	207.56	4.88	Circular	748009.34	3856696.85	6.55								
BLD_7	Oily Solids Tank	208.16	7.32	Circular	748031.26	3856692.49	6.55								
BLD_8	Oily Solids Tank	207.99	7.32	Circular	748018.82	3856705.74	6.55								
BLD_9	Water Tank	207.91	7.32	Circular	748001.96	3856727	9.07								
BLD_10	Water Tank	207.94	7.32	Circular	747989.86	3856745.23	16.76								
BLD_11	Water Tank	207.88	7.32	Circular	747967.46	3856768.14	16.76								
BLD_12	Water Tank	207.87	7.32	Circular	747952.57	3856780.35	11.79								
BLD_13	100 barrel	207.39	1.83	Rectangular				747993.73	3856714.22	6.1	1.83	136.5			
BLD_14	100 barrel	216.23	1.83	Rectangular				748054.39	3856797.63	6.1	1.83	139.9			
BLD_15	Water Tank	207.68	7.32	Circular	747930.7	3856803.29	11.79								
BLD_16	Caustic Tank	313.48	7.32	Circular	748599.91	3857168.91	4.72								
BLD_17	Caustic	313.48	3.05	Circular	748604.93	3857172.27	3.66								
BLD_18	Water Tank	216.41	7.32	Circular	747998.7	3856852.34	4.72								
BLD_19	Water	209.14	7.32	Circular	747988.83	3856833.01	11.79								
BLD_20	Water Tank	209.87	7.32	Circular	747998.88	3856822.49	11.79								
BLD_21	Heat Medium Tank	215.58	7.32	Circular	748030.21	3856775.16	4.72								
BLD_22	Heat Medium Tank	215.76	7.32	Circular	748039.24	3856766.13	4.72								
BLD_23	Water Tank	216.1	7.32	Circular	748084.84	3856732.44	11.79								
BLD_24	water Tank	216.11	7.32	Circular	748095.02	3856721.94	11.79								
BLD_25	Water Tank	216.41	7.32	Circular	748115.72	3856731.4	4.72								
BLD_26	Brine	207.51	10.67	Circular	748118.57	3856599.18	4.27								
BLD_27	Brine	207.23	10.67	Circular	748111.01	3856601.03	4.27								
BLD_28	Brine	207.46	10.67	Circular	748116.32	3856589.16	4.27								
BLD_29	Brine	207.05	10.67	Circular	748109.25	3856590.62	4.27								
BLD_30	SO2/Waste Tank	211.94	3.66	Rectangular				748497.58	3857325.27	7.36	4.42	138.5			
BLD_31	SFX Filtrate	211.75	1.83	Circular	748474.82	3857339.57	2.44								
BLD_32	SFX Storage	211.78	3.66	Circular	748461.12	3857327.8	3.66								
BLD_33	SFX Storage	211.59	3.66	Circular	748465.01	3857323.64	3.66								
BLD_34	SFX Storage	211.34	4.42	Circular	748466.2	3857316.1	3.66								
BLD_35	SFX Storage	211.54	2.29	Circular	748459.69	3857320.95	2.29								
BLD_36	SFX Storage	211.54	2.29	Circular	748462.1	3857319.21	2.29								
BLD_37	Warehouse	217.63	7.77	Rectangular				748255.19	3856672.51	30.48	12.19	258.7			
BLD_38	Shop	217.26	7.77	Rectangular				748255.13	3856641.09	18.29	12.19	256.7			

TABLE D-10: Structure Parameters Used to Calculate Building Downwash

AERMOD ID	Description	Elevation (m)	Tier Height (m)	Type	Circular			Rectangular					Polygonal		
					Center Point (m)		Diameter (m)	Reference Point (SW Corner) (m)		Side Lengths (m)		Rotational Angle (deg)	# of Nodes	Node Coordinates (m)	
					x	y		x	y	x	y			x	y
BLD_39	Office	216.63	7.32	Polygonal									22	748166.81	3856725.76
														748165.1	3856717.54
														748161.26	3856718.04
														748159.88	3856710.84
														748163.6	3856709.99
														748162.58	3856707.53
														748164.63	3856704.78
														748172.45	3856703.32
														748171.57	3856701.42
														748175.76	3856700.42
														748176.65	3856702.56
														748179.95	3856702.14
														748184.52	3856701
														748186.01	3856705.87
														748190.35	3856705.01
														748192.04	3856712.29
														748187.69	3856713.07
														748189.17	3856721.28
														748180.99	3856722.99
														748181.24	3856725.41
														748177.25	3856726.09
														748176.48	3856723.38
BLD_40	Office	217.02	7.77	Polygonal									10	748294.68	3856601.73
														748312.88	3856597.79
														748320	3856629.31
														748318.32	3856629.68
														748319.25	3856633.81
														748320.38	3856633.81
														748322.63	3856643.19
														748317.38	3856644.5
														748317.38	3856647.32
														748304.81	3856649.76
BLD_41	Office	217.65	7.77	Rectangular				748352.36	3856635.88	35.29	14.7	347.61			

AAQA Receptors

- Table D-11: Receptor Locations and Elevations

TABLE D-11: Receptors Locations and Elevations

Receptor		UTMs		ELEV (m)	Receptor		UTMs		ELEV (m)	Receptor		UTMs		ELEV (m)
#	Type	X (m)	Y (m)		#	Type	X (m)	Y (m)		#	Type	X (m)	Y (m)	
1	Property Boundary	749760.91	3858986.51	251	46	Property Boundary	749045.42	3859492.82	196.47	91	Property Boundary	750608.8327	3858131.172	224.53
2	Property Boundary	750591.46	3859007.03	240.94	47	Property Boundary	749035.97	3859534.74	195.57	92	Property Boundary	750609.7979	3858082.513	224.92
3	Property Boundary	750623.31	3857401.29	284.72	48	Property Boundary	749020.97	3859622.01	186.57	93	Property Boundary	750610.763	3858033.854	223.35
4	Property Boundary	750220.95	3857395.51	265.38	49	Property Boundary	748988.77	3859627.55	182.58	94	Property Boundary	750611.7282	3857985.195	227.82
5	Property Boundary	750232.22	3856602.03	270.69	50	Property Boundary	748991.86	3859642.34	182.27	95	Property Boundary	750612.6933	3857936.537	230.96
6	Property Boundary	749820.9	3856598.53	299.63	51	Property Boundary	749014.76	3859637.83	184.8	96	Property Boundary	750613.6585	3857887.878	233.05
7	Property Boundary	749819.12	3856194.32	293.93	52	Property Boundary	748995.91	3859678	180.69	97	Property Boundary	750614.6236	3857839.219	239.01
8	Property Boundary	749426.68	3856188.55	254.16	53	Property Boundary	748997.82	3859713.92	178.94	98	Property Boundary	750615.5888	3857790.56	241.66
9	Property Boundary	749428.44	3856057.4	246.24	54	Property Boundary	748988.37	3859773.62	175.25	99	Property Boundary	750616.5539	3857741.902	245.56
10	Property Boundary	749354	3855788.15	221.88	55	Property Boundary	748947.95	3859773.25	174.25	100	Property Boundary	750617.5191	3857693.243	249.95
11	Property Boundary	749031.37	3855783.81	203.52	56	Property Boundary	748936.86	3860177.27	169.96	101	Property Boundary	750618.4842	3857644.584	260.35
12	Property Boundary	749015.15	3855796.6	203.57	57	Property Boundary	749728.86	3860201.31	175.39	102	Property Boundary	750619.4494	3857595.925	272.4
13	Property Boundary	748997.6	3855793.35	203.61	58	Property Boundary	749809.7659	3858987.717	256.15	103	Property Boundary	750620.4145	3857547.266	277.62
14	Property Boundary	748939.13	3855801.37	211.13	59	Property Boundary	749858.6218	3858988.924	256.72	104	Property Boundary	750621.3797	3857498.608	282.88
15	Property Boundary	748949.14	3855877.99	222.02	60	Property Boundary	749907.4776	3858990.131	257.41	105	Property Boundary	750622.3448	3857449.949	280.85
16	Property Boundary	749027.54	3856027.88	235.34	61	Property Boundary	749956.3335	3858991.338	256.62	106	Property Boundary	750578.6033	3857400.648	274.89
17	Property Boundary	749026.04	3856182.46	247.5	62	Property Boundary	750005.1894	3858992.545	249.33	107	Property Boundary	750533.8967	3857400.006	268.24
18	Property Boundary	748616.42	3856174.71	207.1	63	Property Boundary	750054.0453	3858993.752	229.36	108	Property Boundary	750489.19	3857399.363	270.92
19	Property Boundary	748612.68	3856571.18	231.85	64	Property Boundary	750102.9012	3858994.959	210.47	109	Property Boundary	750444.4833	3857398.721	284.52
20	Property Boundary	747931.81	3856559.64	192.15	65	Property Boundary	750151.7571	3858996.166	195.17	110	Property Boundary	750399.7767	3857398.079	293.5
21	Property Boundary	747929.02	3856707.17	201.34	66	Property Boundary	750200.6129	3858997.374	195.07	111	Property Boundary	750355.07	3857397.437	292.57
22	Property Boundary	747794.18	3856705.63	194.43	67	Property Boundary	750249.4688	3858998.581	207.76	112	Property Boundary	750310.3633	3857396.794	285.59
23	Property Boundary	747782.93	3857351.87	233.36	68	Property Boundary	750298.3247	3858999.788	229.33	113	Property Boundary	750265.6567	3857396.152	275.86
24	Property Boundary	747358.42	3857357.73	194.54	69	Property Boundary	750347.1806	3859000.995	243.43	114	Property Boundary	750221.6544	3857345.918	260.31
25	Property Boundary	747336.08	3858950.29	224.75	70	Property Boundary	750396.0365	3859002.202	240.96	115	Property Boundary	750222.3588	3857296.325	264.4
26	Property Boundary	749344.73	3858977.45	236.21	71	Property Boundary	750444.8924	3859003.409	238.1	116	Property Boundary	750223.0631	3857246.733	265.06
27	Property Boundary	749343.68	3859033.83	240.86	72	Property Boundary	750493.7482	3859004.616	247.1	117	Property Boundary	750223.7675	3857197.14	278.33
28	Property Boundary	749311.05	3859079.85	245.46	73	Property Boundary	750542.6041	3859005.823	247.1	118	Property Boundary	750224.4719	3857147.548	288.66
29	Property Boundary	749248.54	3859076.21	229.63	74	Property Boundary	750592.4252	3858958.371	244.24	119	Property Boundary	750225.1763	3857097.955	288.06
30	Property Boundary	749248.31	3859107.59	232.11	75	Property Boundary	750593.3903	3858909.712	247.66	120	Property Boundary	750225.8806	3857048.363	282
31	Property Boundary	749289.34	3859107.66	244.8	76	Property Boundary	750594.3555	3858861.054	255.64	121	Property Boundary	750226.585	3856998.77	273.09
32	Property Boundary	749262.77	3859151.17	241.38	77	Property Boundary	750595.3206	3858812.395	257.9	122	Property Boundary	750227.2894	3856949.178	284.2
33	Property Boundary	749261.93	3859172.05	240.95	78	Property Boundary	750596.2858	3858763.736	259.93	123	Property Boundary	750227.9938	3856899.585	303.5
34	Property Boundary	749272.2	3859191.39	241.52	79	Property Boundary	750597.2509	3858715.077	263.04	124	Property Boundary	750228.6981	3856849.993	314.11
35	Property Boundary	749281.36	3859196.94	241.51	80	Property Boundary	750598.2161	3858666.418	262.38	125	Property Boundary	750229.4025	3856800.4	302.58
36	Property Boundary	749272.32	3859197.69	241.31	81	Property Boundary	750599.1812	3858617.76	256.11	126	Property Boundary	750230.1069	3856750.808	292.1
37	Property Boundary	749272.2	3859227.62	239.82	82	Property Boundary	750600.1464	3858569.101	257.98	127	Property Boundary	750230.8113	3856701.215	280.92
38	Property Boundary	749314.51	3859229.51	240.58	83	Property Boundary	750601.1115	3858520.442	248.91	128	Property Boundary	750231.5156	3856651.623	275.09
39	Property Boundary	749324.07	3859336.34	235.13	84	Property Boundary	750602.0767	3858471.783	232.83	129	Property Boundary	750186.5178	3856601.641	264.86
40	Property Boundary	749323.49	3859372.11	233.54	85	Property Boundary	750603.0418	3858423.125	223.61	130	Property Boundary	750140.8156	3856601.252	264.1
41	Property Boundary	749289.34	3859427.05	226.37	86	Property Boundary	750604.007	3858374.466	220.4	131	Property Boundary	750095.1133	3856600.863	264.45
42	Property Boundary	749228.14	3859455.17	219.19	87	Property Boundary	750604.9721	3858325.807	218.09	132	Property Boundary	750049.4111	3856600.474	265.67
43	Property Boundary	749185.46	3859486.14	220.02	88	Property Boundary	750605.9373	3858277.148	216.23	133	Property Boundary	750003.7089	3856600.086	270.16
44	Property Boundary	749146.69	3859498.49	213.9	89	Property Boundary	750606.9024	3858228.489	215.43	134	Property Boundary	749958.0067	3856599.697	283.1
45	Property Boundary	749074.45	3859478.41	199.2	90	Property Boundary	750607.8676	3858179.831	217.56	135	Property Boundary	749912.3044	3856599.308	297.06

TABLE D-11: Receptors Locations and Elevations

Receptor		UTMs		ELEV (m)	Receptor		UTMs		ELEV (m)	Receptor		UTMs		ELEV (m)
#	Type	X (m)	Y (m)		#	Type	X (m)	Y (m)		#	Type	X (m)	Y (m)	
136	Property Boundary	749866.6022	3856598.919	302.89	181	Property Boundary	748615.9525	3856224.269	207.37	226	Property Boundary	747357.0238	3857457.265	206.31
137	Property Boundary	749820.7022	3856553.618	312.67	182	Property Boundary	748615.485	3856273.828	212.93	227	Property Boundary	747356.3256	3857507.033	218.55
138	Property Boundary	749820.5044	3856508.706	325.97	183	Property Boundary	748615.0175	3856323.386	222.87	228	Property Boundary	747355.6275	3857556.8	227.92
139	Property Boundary	749820.3067	3856463.793	336.09	184	Property Boundary	748614.55	3856372.945	232.09	229	Property Boundary	747354.9294	3857606.568	217.61
140	Property Boundary	749820.1089	3856418.881	341.92	185	Property Boundary	748614.0825	3856422.504	236.01	230	Property Boundary	747354.2313	3857656.335	208.24
141	Property Boundary	749819.9111	3856373.969	332.91	186	Property Boundary	748613.615	3856472.063	233.98	231	Property Boundary	747353.5331	3857706.103	223.88
142	Property Boundary	749819.7133	3856329.057	320.3	187	Property Boundary	748613.1475	3856521.621	232.32	232	Property Boundary	747352.835	3857755.87	236.07
143	Property Boundary	749819.5156	3856284.144	310.72	188	Property Boundary	748564.0464	3856570.356	226.37	233	Property Boundary	747352.1369	3857805.638	239.74
144	Property Boundary	749819.3178	3856239.232	302.94	189	Property Boundary	748515.4129	3856569.531	220.37	234	Property Boundary	747351.4388	3857855.405	237.53
145	Property Boundary	749770.065	3856193.599	292.29	190	Property Boundary	748466.7793	3856568.707	218.78	235	Property Boundary	747350.7406	3857905.173	229.41
146	Property Boundary	749721.01	3856192.878	280.24	191	Property Boundary	748418.1457	3856567.883	220.04	236	Property Boundary	747350.0425	3857954.94	221.72
147	Property Boundary	749671.955	3856192.156	272.49	192	Property Boundary	748369.5121	3856567.059	218.36	237	Property Boundary	747349.3444	3858004.708	211.82
148	Property Boundary	749622.9	3856191.435	269.07	193	Property Boundary	748320.8786	3856566.234	217.36	238	Property Boundary	747348.6463	3858054.475	206.23
149	Property Boundary	749573.845	3856190.714	272.68	194	Property Boundary	748272.245	3856565.41	220.4	239	Property Boundary	747347.9481	3858104.243	207.49
150	Property Boundary	749524.79	3856189.993	282.08	195	Property Boundary	748223.6114	3856564.586	218.45	240	Property Boundary	747347.25	3858154.01	221.24
151	Property Boundary	749475.735	3856189.271	267.98	196	Property Boundary	748174.9779	3856563.761	209.46	241	Property Boundary	747346.5519	3858203.778	231.92
152	Property Boundary	749427.2667	3856144.833	251.51	197	Property Boundary	748126.3443	3856562.937	202.55	242	Property Boundary	747345.8538	3858253.545	242.47
153	Property Boundary	749427.8533	3856101.117	247.96	198	Property Boundary	748077.7107	3856562.113	197.95	243	Property Boundary	747345.1556	3858303.313	245.54
154	Property Boundary	749416.0333	3856012.525	239.43	199	Property Boundary	748029.0771	3856561.289	194.77	244	Property Boundary	747344.4575	3858353.08	243.07
155	Property Boundary	749403.6267	3855967.65	236.43	200	Property Boundary	747980.4436	3856560.464	193.49	245	Property Boundary	747343.7594	3858402.848	226.91
156	Property Boundary	749391.22	3855922.775	235.19	201	Property Boundary	747930.88	3856608.817	193.62	246	Property Boundary	747343.0613	3858452.615	223.64
157	Property Boundary	749378.8133	3855877.9	231.72	202	Property Boundary	747929.95	3856657.993	197.06	247	Property Boundary	747342.3631	3858502.383	234.1
158	Property Boundary	749366.4067	3855833.025	231.29	203	Property Boundary	747884.0733	3856706.657	199.63	248	Property Boundary	747341.665	3858552.15	245.78
159	Property Boundary	749307.91	3855787.53	217.83	204	Property Boundary	747839.1267	3856706.143	197.28	249	Property Boundary	747340.9669	3858601.918	263.71
160	Property Boundary	749261.82	3855786.91	220.67	205	Property Boundary	747793.3146	3856755.341	197.47	250	Property Boundary	747340.2688	3858651.685	268.47
161	Property Boundary	749215.73	3855786.29	215.95	206	Property Boundary	747792.4492	3856805.052	200.38	251	Property Boundary	747339.5706	3858701.453	263.74
162	Property Boundary	749169.64	3855785.67	206.25	207	Property Boundary	747791.5838	3856854.762	201.96	252	Property Boundary	747338.8725	3858751.22	252.52
163	Property Boundary	749123.55	3855785.05	205.72	208	Property Boundary	747790.7185	3856904.473	203.73	253	Property Boundary	747338.1744	3858800.988	239.28
164	Property Boundary	749077.46	3855784.43	204.65	209	Property Boundary	747789.8531	3856954.184	204.41	254	Property Boundary	747337.4763	3858850.755	238.27
165	Property Boundary	748968.365	3855797.36	207.69	210	Property Boundary	747788.9877	3857003.895	207.28	255	Property Boundary	747336.7781	3858900.523	234.08
166	Property Boundary	748944.135	3855839.68	220.78	211	Property Boundary	747788.1223	3857053.605	213.72	256	Property Boundary	747385.0715	3858950.952	241.8
167	Property Boundary	748968.74	3855915.463	222.79	212	Property Boundary	747787.2569	3857103.316	221.67	257	Property Boundary	747434.0629	3858951.615	248.84
168	Property Boundary	748988.34	3855952.935	225.3	213	Property Boundary	747786.3915	3857153.027	233.8	258	Property Boundary	747483.0544	3858952.277	237.68
169	Property Boundary	749007.94	3855990.408	232.61	214	Property Boundary	747785.5262	3857202.738	252.35	259	Property Boundary	747532.0459	3858952.94	237.29
170	Property Boundary	749027.165	3856066.525	236.62	215	Property Boundary	747784.6608	3857252.448	255.24	260	Property Boundary	747581.0373	3858953.602	229.27
171	Property Boundary	749026.79	3856105.17	239.26	216	Property Boundary	747783.7954	3857302.159	244.82	261	Property Boundary	747630.0288	3858954.265	214.03
172	Property Boundary	749026.415	3856143.815	242.66	217	Property Boundary	747735.7622	3857352.521	219.73	262	Property Boundary	747679.0202	3858954.927	200.71
173	Property Boundary	748980.5267	3856181.599	246.66	218	Property Boundary	747688.5944	3857353.172	218.29	263	Property Boundary	747728.0117	3858955.59	196
174	Property Boundary	748935.0133	3856180.738	248.9	219	Property Boundary	747641.4267	3857353.823	225.61	264	Property Boundary	747777.0032	3858956.252	200.61
175	Property Boundary	748889.5	3856179.877	249.83	220	Property Boundary	747594.2589	3857354.474	242.24	265	Property Boundary	747825.9946	3858956.914	218.42
176	Property Boundary	748843.9867	3856179.016	244.03	221	Property Boundary	747547.0911	3857355.126	231.86	266	Property Boundary	747874.9861	3858957.577	232.69
177	Property Boundary	748798.4733	3856178.154	236.87	222	Property Boundary	747499.9233	3857355.777	217.66	267	Property Boundary	747923.9776	3858958.239	221.99
178	Property Boundary	748752.96	3856177.293	230.42	223	Property Boundary	747452.7556	3857356.428	206.94	268	Property Boundary	747972.969	3858958.902	204.1
179	Property Boundary	748707.4467	3856176.432	222.61	224	Property Boundary	747405.5878	3857357.079	199	269	Property Boundary	748021.9605	3858959.564	194
180	Property Boundary	748661.9333	3856175.571	214.71	225	Property Boundary	747357.7219	3857407.498	198.78	270	Property Boundary	748070.952	3858960.227	200.51

TABLE D-11: Receptors Locations and Elevations

Receptor		UTMs		ELEV (m)	Receptor		UTMs		ELEV (m)	Receptor		UTMs		ELEV (m)
#	Type	X (m)	Y (m)		#	Type	X (m)	Y (m)		#	Type	X (m)	Y (m)	
271	Property Boundary	748119.9434	3858960.889	221.95	316	Property Boundary	748986.36	3860178.773	190.31	361	Grid	750702.6815	3858442.281	240.81
272	Property Boundary	748168.9349	3858961.551	228.8	317	Property Boundary	749035.86	3860180.275	197.74	362	Grid	750704.555	3858347.826	233.27
273	Property Boundary	748217.9263	3858962.214	215.33	318	Property Boundary	749085.36	3860181.778	195.49	363	Grid	750706.4286	3858253.371	218.82
274	Property Boundary	748266.9178	3858962.876	200.98	319	Property Boundary	749134.86	3860183.28	187.99	364	Grid	750708.3021	3858158.915	217.37
275	Property Boundary	748315.9093	3858963.539	194.04	320	Property Boundary	749184.36	3860184.783	178.58	365	Grid	750710.1756	3858064.46	239.63
276	Property Boundary	748364.9007	3858964.201	195.44	321	Property Boundary	749233.86	3860186.285	167.38	366	Grid	750712.0492	3857970.005	241.13
277	Property Boundary	748413.8922	3858964.864	196.08	322	Property Boundary	749283.36	3860187.788	159.34	367	Grid	750713.9227	3857875.55	236.55
278	Property Boundary	748462.8837	3858965.526	199.1	323	Property Boundary	749332.86	3860189.29	165.66	368	Grid	750715.7962	3857781.094	242.1
279	Property Boundary	748511.8751	3858966.189	203.29	324	Property Boundary	749382.36	3860190.793	183.94	369	Grid	750717.6697	3857686.639	257.45
280	Property Boundary	748560.8666	3858966.851	208.09	325	Property Boundary	749431.86	3860192.295	187.29	370	Grid	750719.5433	3857592.184	264.96
281	Property Boundary	748609.858	3858967.513	216.61	326	Property Boundary	749481.36	3860193.798	189.52	371	Grid	750721.4168	3857497.728	260.21
282	Property Boundary	748658.8495	3858968.176	221.88	327	Property Boundary	749530.86	3860195.3	192.5	372	Grid	750723.2903	3857403.273	262.88
283	Property Boundary	748707.841	3858968.838	227.84	328	Property Boundary	749580.36	3860196.803	190.75	373	Grid	750760.5591	3859081.281	237.19
284	Property Boundary	748756.8324	3858969.501	230.69	329	Property Boundary	749629.86	3860198.305	188.07	374	Grid	750658.1089	3859179.267	200.52
285	Property Boundary	748805.8239	3858970.163	222.68	330	Property Boundary	749679.36	3860199.808	183.18	375	Grid	750793.2942	3858916.541	236.2
286	Property Boundary	748854.8154	3858970.826	217.36	331	Property Boundary	749730.142	3860152.718	168.62	376	Grid	750795.1677	3858822.086	244.38
287	Property Boundary	748903.8068	3858971.488	210.88	332	Property Boundary	749731.424	3860104.126	180.71	377	Grid	750797.0413	3858727.63	249.54
288	Property Boundary	748952.7983	3858972.15	205.17	333	Property Boundary	749732.706	3860055.534	190.33	378	Grid	750798.9148	3858633.175	264.68
289	Property Boundary	749001.7898	3858972.813	193.58	334	Property Boundary	749733.988	3860006.942	194.49	379	Grid	750800.7883	3858538.72	278.32
290	Property Boundary	749050.7812	3858973.475	192.44	335	Property Boundary	749735.27	3859958.35	196.57	380	Grid	750802.6618	3858444.264	266.48
291	Property Boundary	749099.7727	3858974.138	192.64	336	Property Boundary	749736.552	3859909.758	195.84	381	Grid	750804.5354	3858349.809	243.39
292	Property Boundary	749148.7641	3858974.8	201.78	337	Property Boundary	749737.834	3859861.166	193.51	382	Grid	750806.4089	3858255.354	232.75
293	Property Boundary	749197.7556	3858975.463	207.15	338	Property Boundary	749739.116	3859812.574	196.96	383	Grid	750808.2824	3858160.899	221
294	Property Boundary	749246.7471	3858976.125	213.25	339	Property Boundary	749740.398	3859763.982	198.12	384	Grid	750810.156	3858066.443	220.47
295	Property Boundary	749295.7385	3858976.788	225.57	340	Property Boundary	749741.68	3859715.39	195.41	385	Grid	750812.0295	3857971.988	237.21
296	Property Boundary	749344.205	3859005.64	237.17	341	Property Boundary	749742.962	3859666.798	195.83	386	Grid	750813.903	3857877.533	248.78
297	Property Boundary	749327.365	3859056.84	243.88	342	Property Boundary	749744.244	3859618.206	202.35	387	Grid	750815.7766	3857783.077	257.5
298	Property Boundary	749279.795	3859078.03	240.4	343	Property Boundary	749745.526	3859569.614	204.81	388	Grid	750817.6501	3857688.622	255.53
299	Property Boundary	749276.055	3859129.415	245.53	344	Property Boundary	749746.808	3859521.022	205.1	389	Grid	750819.5236	3857594.167	258.15
300	Property Boundary	749317.6967	3859265.12	238.48	345	Property Boundary	749748.09	3859472.43	204.87	390	Grid	750821.3971	3857499.712	267.77
301	Property Boundary	749320.8833	3859300.73	236.11	346	Property Boundary	749749.372	3859423.838	206.68	391	Grid	750823.2707	3857405.256	275.97
302	Property Boundary	749306.415	3859399.58	231.69	347	Property Boundary	749750.654	3859375.246	213.63	392	Grid	750860.5394	3859083.264	209.51
303	Property Boundary	749258.74	3859441.11	221.05	348	Property Boundary	749751.936	3859326.654	218.87	393	Grid	750727.2276	3859251.535	193.47
304	Property Boundary	749206.8	3859470.655	218.67	349	Property Boundary	749753.218	3859278.062	227.51	394	Grid	750893.2745	3858918.524	219
305	Property Boundary	749110.57	3859488.45	206.89	350	Property Boundary	749754.5	3859229.47	231.46	395	Grid	750895.1481	3858824.069	242.46
306	Property Boundary	749028.47	3859578.375	190.22	351	Property Boundary	749755.782	3859180.878	234.37	396	Grid	750897.0216	3858729.613	251.89
307	Property Boundary	748993.095	3859743.77	176.55	352	Property Boundary	749757.064	3859132.286	241.11	397	Grid	750898.8951	3858635.158	257.94
308	Property Boundary	748946.7178	3859818.141	171.17	353	Property Boundary	749758.346	3859083.694	244.88	398	Grid	750900.7686	3858540.703	277.23
309	Property Boundary	748945.4856	3859863.032	170.42	354	Property Boundary	749759.628	3859035.102	248.38	399	Grid	750902.6422	3858446.248	282.31
310	Property Boundary	748944.2533	3859907.923	171.11	355	Grid	750691.4403	3859009.013	230.06	400	Grid	750904.5157	3858351.792	259.31
311	Property Boundary	748943.0211	3859952.814	172.1	356	Grid	750693.3139	3858914.558	239.41	401	Grid	750906.3892	3858257.337	235.73
312	Property Boundary	748941.7889	3859997.706	168.55	357	Grid	750695.1874	3858820.103	252.05	402	Grid	750908.2628	3858162.882	221.48
313	Property Boundary	748940.5567	3860042.597	170.64	358	Grid	750697.0609	3858725.647	267.79	403	Grid	750910.1363	3858068.426	221.42
314	Property Boundary	748939.3244	3860087.488	170.63	359	Grid	750698.9345	3858631.192	271.32	404	Grid	750912.0098	3857973.971	235.93
315	Property Boundary	748938.0922	3860132.379	170.1	360	Grid	750700.808	3858536.737	263.35	405	Grid	750913.8834	3857879.516	259.1

TABLE D-11: Receptors Locations and Elevations

Receptor		UTMs		ELEV (m)	Receptor		UTMs		ELEV (m)	Receptor		UTMs		ELEV (m)
#	Type	X (m)	Y (m)		#	Type	X (m)	Y (m)		#	Type	X (m)	Y (m)	
406	Grid	750915.7569	3857785.061	252.29	451	Grid	751121.3381	3857505.661	292.89	496	Grid	751313.8047	3857887.448	264.03
407	Grid	750917.6304	3857690.605	248	452	Grid	751123.2117	3857411.206	291.74	497	Grid	751315.6782	3857792.993	242.65
408	Grid	750919.5039	3857596.15	257.84	453	Grid	751154.3081	3859103.27	208.3	498	Grid	751317.5518	3857698.538	245.8
409	Grid	750921.3775	3857501.695	273.03	454	Grid	751117.2742	3859187.611	219.21	499	Grid	751319.4253	3857604.082	261.66
410	Grid	750923.251	3857407.239	279.56	455	Grid	751080.2404	3859271.953	219.67	500	Grid	751321.2988	3857509.627	270.19
411	Grid	750960.5198	3859085.247	226.68	456	Grid	751043.2065	3859356.294	210.81	501	Grid	751323.1723	3857415.172	298.97
412	Grid	750898.7966	3859225.816	194.46	457	Grid	750920.2662	3859473.878	220	502	Grid	751356.0323	3859103.22	221.45
413	Grid	750796.3464	3859323.802	194.93	458	Grid	750834.3598	3859507.12	219.83	503	Grid	751285.4916	3859263.87	230.63
414	Grid	750653.1691	3859379.206	188.87	459	Grid	750748.4534	3859540.362	210.26	504	Grid	751214.9508	3859424.52	221.05
415	Grid	750993.2549	3858920.507	243.62	460	Grid	750662.547	3859573.605	195.51	505	Grid	751062.5945	3859616.83	212.69
416	Grid	750995.1284	3858826.052	253.82	461	Grid	751191.342	3859018.929	204.27	506	Grid	750898.9633	3859680.148	209.31
417	Grid	750997.0019	3858731.597	268.18	462	Grid	751193.2155	3858924.473	228.14	507	Grid	750735.332	3859743.467	206.39
418	Grid	750998.8755	3858637.141	273.52	463	Grid	751195.0891	3858830.018	233.31	508	Grid	751393.1762	3858928.44	208.16
419	Grid	751000.749	3858542.686	280.29	464	Grid	751196.9626	3858735.563	240.53	509	Grid	751395.0497	3858833.984	219.08
420	Grid	751002.6225	3858448.231	282.69	465	Grid	751198.8361	3858641.108	264.87	510	Grid	751396.9233	3858739.529	232.69
421	Grid	751004.496	3858353.775	271.01	466	Grid	751200.7097	3858546.652	266.43	511	Grid	751398.7968	3858645.074	228.18
422	Grid	751006.3696	3858259.32	245.48	467	Grid	751202.5832	3858452.197	281.42	512	Grid	751400.6703	3858550.618	227.72
423	Grid	751008.2431	3858164.865	229.9	468	Grid	751204.4567	3858357.742	282.52	513	Grid	751402.5439	3858456.163	233.23
424	Grid	751010.1166	3858070.41	238.06	469	Grid	751206.3302	3858263.286	265.03	514	Grid	751404.4174	3858361.708	244.59
425	Grid	751011.9902	3857975.954	228.23	470	Grid	751208.2038	3858168.831	245.4	515	Grid	751406.2909	3858267.253	270.51
426	Grid	751013.8637	3857881.499	231	471	Grid	751210.0773	3858074.376	245.61	516	Grid	751408.1644	3858172.797	274.67
427	Grid	751015.7372	3857787.044	239.33	472	Grid	751211.9508	3857979.92	256.9	517	Grid	751410.038	3858078.342	268.05
428	Grid	751017.6107	3857692.588	255	473	Grid	751213.8244	3857885.465	237.13	518	Grid	751411.9115	3857983.887	262.28
429	Grid	751019.4843	3857598.133	266.65	474	Grid	751215.6979	3857791.01	241.61	519	Grid	751413.785	3857889.431	281.49
430	Grid	751021.3578	3857503.678	270.1	475	Grid	751217.5714	3857696.555	265.79	520	Grid	751415.6586	3857794.976	261.4
431	Grid	751023.2313	3857409.222	266.98	476	Grid	751219.4449	3857602.099	290.79	521	Grid	751417.5321	3857700.521	246.46
432	Grid	751060.5001	3859087.23	197.96	477	Grid	751221.3185	3857507.644	287.62	522	Grid	751419.4056	3857606.066	247.11
433	Grid	750998.777	3859227.799	201.34	478	Grid	751223.192	3857413.189	294.99	523	Grid	751421.2791	3857511.61	254
434	Grid	750865.4652	3859396.07	218.18	479	Grid	751255.3172	3859102.91	222.84	524	Grid	751423.1527	3857417.155	267.71
435	Grid	750722.2878	3859451.474	193.38	480	Grid	751183.3068	3859266.907	226.97	525	Grid	751456.5637	3859103.948	230.22
436	Grid	751093.2352	3858922.49	245.05	481	Grid	751111.2965	3859430.904	219.93	526	Grid	751387.1252	3859262.088	232.27
437	Grid	751095.1087	3858828.035	249.72	482	Grid	750991.7712	3859545.222	218.07	527	Grid	751317.6867	3859420.228	225.27
438	Grid	751096.9823	3858733.58	258.67	483	Grid	750824.731	3859609.86	208.1	528	Grid	751248.2481	3859578.368	218.05
439	Grid	751098.8558	3858639.124	272.66	484	Grid	750657.6908	3859674.497	193.56	529	Grid	751132.9916	3859688.603	211.25
440	Grid	751100.7293	3858544.669	279.77	485	Grid	751293.1959	3858926.457	213.44	530	Grid	750971.9171	3859750.932	206.98
441	Grid	751102.6028	3858450.214	283.4	486	Grid	751295.0694	3858832.001	219.85	531	Grid	750810.8427	3859813.261	196.99
442	Grid	751104.4764	3858355.759	268.66	487	Grid	751296.9429	3858737.546	243.39	532	Grid	750649.7682	3859875.591	191.89
443	Grid	751106.3499	3858261.303	248.37	488	Grid	751298.8165	3858643.091	255.88	533	Grid	751493.1565	3858930.423	222.04
444	Grid	751108.2234	3858166.848	232.19	489	Grid	751300.69	3858548.635	249.6	534	Grid	751495.0301	3858835.967	207.52
445	Grid	751110.097	3858072.393	254.55	490	Grid	751302.5635	3858454.18	259.26	535	Grid	751496.9036	3858741.512	215.06
446	Grid	751111.9705	3857977.937	238.67	491	Grid	751304.437	3858359.725	281.18	536	Grid	751498.7771	3858647.057	221.13
447	Grid	751113.844	3857883.482	236.2	492	Grid	751306.3106	3858265.269	279.75	537	Grid	751500.6507	3858552.602	236.45
448	Grid	751115.7176	3857789.027	267.75	493	Grid	751308.1841	3858170.814	261.33	538	Grid	751502.5242	3858458.146	238.71
449	Grid	751117.5911	3857694.571	262.45	494	Grid	751310.0576	3858076.359	248.52	539	Grid	751504.3977	3858363.691	225.93
450	Grid	751119.4646	3857600.116	273.8	495	Grid	751311.9312	3857981.904	263.57	540	Grid	751506.2712	3858269.236	231.03

TABLE D-11: Receptors Locations and Elevations

Receptor		UTMs		ELEV (m)	Receptor		UTMs		ELEV (m)	Receptor		UTMs		ELEV (m)
#	Type	X (m)	Y (m)		#	Type	X (m)	Y (m)		#	Type	X (m)	Y (m)	
541	Grid	751508.1448	3858174.78	240.13	586	Grid	751001.7774	3859937.405	155.82	631	Grid	751798.7181	3858653.006	230.09
542	Grid	751510.0183	3858080.325	250.83	587	Grid	750914.2801	3859971.263	156.41	632	Grid	751800.5917	3858558.551	235.4
543	Grid	751511.8918	3857985.87	267.15	588	Grid	750826.7829	3860005.121	159.59	633	Grid	751802.4652	3858464.096	256.89
544	Grid	751513.7654	3857891.415	275.47	589	Grid	750739.2856	3860038.979	160.09	634	Grid	751804.3387	3858369.64	285.51
545	Grid	751515.6389	3857796.959	281.68	590	Grid	750651.7884	3860072.836	161.33	635	Grid	751806.2122	3858275.185	290.84
546	Grid	751517.5124	3857702.504	274.87	591	Grid	751691.2437	3859028.844	232.56	636	Grid	751808.0858	3858180.73	278.99
547	Grid	751519.3859	3857608.049	252.23	592	Grid	751693.1172	3858934.389	233.81	637	Grid	751809.9593	3858086.274	267.12
548	Grid	751521.2595	3857513.593	258.8	593	Grid	751694.9907	3858839.934	238.4	638	Grid	751811.8328	3857991.819	265.98
549	Grid	751523.133	3857419.138	280.08	594	Grid	751696.8643	3858745.478	228.52	639	Grid	751813.7064	3857897.364	248.62
550	Grid	751556.9727	3859104.955	233.04	595	Grid	751698.7378	3858651.023	222.62	640	Grid	751815.5799	3857802.909	244.29
551	Grid	751488.3914	3859261.143	229.07	596	Grid	751700.6113	3858556.568	240.65	641	Grid	751817.4534	3857708.453	268.91
552	Grid	751419.8102	3859417.33	219.27	597	Grid	751702.4849	3858462.113	262.12	642	Grid	751819.327	3857613.998	284.66
553	Grid	751351.2289	3859573.518	197.8	598	Grid	751704.3584	3858367.657	282.02	643	Grid	751821.2005	3857519.543	290.15
554	Grid	751203.1047	3859760.485	203.98	599	Grid	751706.2319	3858273.202	263.14	644	Grid	751823.074	3857425.087	273.81
555	Grid	751044.0188	3859822.045	201.42	600	Grid	751708.1054	3858178.747	265.92	645	Grid	751854.7316	3859115.874	232.17
556	Grid	750884.9329	3859883.605	193.65	601	Grid	751709.979	3858084.291	260.7	646	Grid	751818.2588	3859198.937	217.79
557	Grid	750725.8469	3859945.165	196.03	602	Grid	751711.8525	3857989.836	245.1	647	Grid	751781.7861	3859282.001	215.38
558	Grid	751593.1369	3858932.406	220.95	603	Grid	751713.726	3857895.381	244.57	648	Grid	751745.3133	3859365.064	222.31
559	Grid	751595.0104	3858837.951	220.53	604	Grid	751715.5996	3857800.925	253.96	649	Grid	751708.8405	3859448.128	216.3
560	Grid	751596.8839	3858743.495	215.81	605	Grid	751717.4731	3857706.47	273.91	650	Grid	751672.3678	3859531.191	213.63
561	Grid	751598.7575	3858649.04	232.39	606	Grid	751719.3466	3857612.015	283.18	651	Grid	751635.895	3859614.254	204.93
562	Grid	751600.631	3858554.585	246.55	607	Grid	751721.2201	3857517.56	270.17	652	Grid	751599.4222	3859697.318	165.66
563	Grid	751602.5045	3858460.129	263.65	608	Grid	751723.0937	3857423.104	257	653	Grid	751562.9495	3859780.381	147.12
564	Grid	751604.378	3858365.674	266.95	609	Grid	751754.1901	3859115.169	226.1	654	Grid	751526.4767	3859863.445	145.36
565	Grid	751606.2516	3858271.219	248.9	610	Grid	751717.1562	3859199.51	219.05	655	Grid	751405.3992	3859979.247	145
566	Grid	751608.1251	3858176.764	245.05	611	Grid	751680.1224	3859283.851	225.38	656	Grid	751320.7944	3860011.985	145
567	Grid	751609.9986	3858082.308	235.35	612	Grid	751643.0885	3859368.193	225.45	657	Grid	751236.1896	3860044.724	143.56
568	Grid	751611.8722	3857987.853	239.05	613	Grid	751606.0546	3859452.534	222.99	658	Grid	751151.5848	3860077.463	143
569	Grid	751613.7457	3857893.398	268.58	614	Grid	751569.0207	3859536.875	222	659	Grid	751066.98	3860110.201	143.29
570	Grid	751615.6192	3857798.942	263.95	615	Grid	751531.9868	3859621.217	198.93	660	Grid	750982.3752	3860142.94	143.05
571	Grid	751617.4928	3857704.487	284.03	616	Grid	751494.9529	3859705.558	184.49	661	Grid	750897.7705	3860175.679	143.99
572	Grid	751619.3663	3857610.032	273.2	617	Grid	751457.9191	3859789.899	160.45	662	Grid	750813.1657	3860208.417	143.8
573	Grid	751621.2398	3857515.576	255.93	618	Grid	751334.9788	3859907.483	145.83	663	Grid	750728.5609	3860241.156	142.71
574	Grid	751623.1133	3857421.121	272.87	619	Grid	751249.0724	3859940.725	144.95	664	Grid	750643.9561	3860273.895	140.87
575	Grid	751653.524	3859114.747	229.22	620	Grid	751163.166	3859973.967	143.6	665	Grid	751891.2043	3859032.811	233.49
576	Grid	751615.8043	3859200.651	231.5	621	Grid	751077.2596	3860007.21	144	666	Grid	751893.0779	3858938.355	235.32
577	Grid	751578.0846	3859286.554	231.81	622	Grid	750991.3532	3860040.452	145	667	Grid	751894.9514	3858843.9	241.56
578	Grid	751540.3649	3859372.457	227.24	623	Grid	750905.4468	3860073.695	145.18	668	Grid	751896.8249	3858749.445	245.25
579	Grid	751502.6452	3859458.36	220.31	624	Grid	750819.5404	3860106.937	145.09	669	Grid	751898.6985	3858654.989	239.75
580	Grid	751464.9255	3859544.263	221.06	625	Grid	750733.634	3860140.179	145.1	670	Grid	751900.572	3858560.534	233.89
581	Grid	751427.2058	3859630.167	209.45	626	Grid	750647.7276	3860173.422	145.13	671	Grid	751902.4455	3858466.079	248.96
582	Grid	751389.4861	3859716.07	200.8	627	Grid	751791.224	3859030.827	230.92	672	Grid	751904.3191	3858371.623	278.11
583	Grid	751264.2692	3859835.831	163.57	628	Grid	751793.0975	3858936.372	235.62	673	Grid	751906.1926	3858277.168	295.56
584	Grid	751176.7719	3859869.689	160.14	629	Grid	751794.9711	3858841.917	242.69	674	Grid	751908.0661	3858182.713	295.71
585	Grid	751089.2746	3859903.547	156.38	630	Grid	751796.8446	3858747.462	242.12	675	Grid	751909.9396	3858088.258	285.43

TABLE D-11: Receptors Locations and Elevations

Receptor		UTMs		ELEV (m)	Receptor		UTMs		ELEV (m)	Receptor		UTMs		ELEV (m)
#	Type	X (m)	Y (m)		#	Type	X (m)	Y (m)		#	Type	X (m)	Y (m)	
676	Grid	751911.8132	3857993.802	260.64	721	Grid	751050.0253	3860314.79	142	766	Grid	752213.6277	3857905.296	289.69
677	Grid	751913.6867	3857899.347	276.29	722	Grid	750884.8207	3860378.717	141.12	767	Grid	752215.5012	3857810.841	287.35
678	Grid	751915.5602	3857804.892	257.18	723	Grid	750719.6161	3860442.645	140	768	Grid	752217.3748	3857716.386	273.36
679	Grid	751917.4338	3857710.436	255.34	724	Grid	752093.0385	3858942.321	215.15	769	Grid	752219.2483	3857621.93	276.88
680	Grid	751919.3073	3857615.981	277.69	725	Grid	752094.9121	3858847.866	222.32	770	Grid	752221.1218	3857527.475	282.32
681	Grid	751921.1808	3857521.526	290.8	726	Grid	752096.7856	3858753.411	233.06	771	Grid	752222.9953	3857433.02	292.51
682	Grid	751923.0543	3857427.071	287.89	727	Grid	752098.6591	3858658.956	245.04	772	Grid	752253.6509	3859126.088	171.2
683	Grid	751955.1795	3859116.792	217.11	728	Grid	752100.5327	3858564.5	245.91	773	Grid	752216.1762	3859211.434	166.74
684	Grid	751883.1692	3859280.789	197.14	729	Grid	752102.4062	3858470.045	233.04	774	Grid	752178.7014	3859296.779	159.38
685	Grid	751811.1589	3859444.786	216.03	730	Grid	752104.2797	3858375.59	238.65	775	Grid	752141.2266	3859382.124	169.01
686	Grid	751739.1485	3859608.783	187.72	731	Grid	752106.1532	3858281.134	252.61	776	Grid	752103.7519	3859467.47	178.67
687	Grid	751667.1382	3859772.78	146	732	Grid	752108.0268	3858186.679	285.21	777	Grid	752066.2771	3859552.815	157.67
688	Grid	751595.1279	3859936.777	145	733	Grid	752109.9003	3858092.224	295.98	778	Grid	752028.8023	3859638.161	152.94
689	Grid	751475.6026	3860051.094	144	734	Grid	752111.7738	3857997.769	295.4	779	Grid	751991.3276	3859723.506	151.42
690	Grid	751308.5624	3860115.732	142.98	735	Grid	752113.6474	3857903.313	293.52	780	Grid	751953.8528	3859808.851	149.12
691	Grid	751141.5222	3860180.37	143	736	Grid	752115.5209	3857808.858	273.81	781	Grid	751916.3781	3859894.197	147.33
692	Grid	750974.482	3860245.008	142	737	Grid	752117.3944	3857714.403	256.57	782	Grid	751878.9033	3859979.542	147
693	Grid	750807.4417	3860309.646	142	738	Grid	752119.268	3857619.947	270.02	783	Grid	751841.4285	3860064.887	146.83
694	Grid	750640.4015	3860374.284	140	739	Grid	752121.1415	3857525.492	271.13	784	Grid	751803.9538	3860150.233	145
695	Grid	751993.0582	3858940.338	228.01	740	Grid	752123.015	3857431.037	287.06	785	Grid	751679.5499	3860269.216	141.14
696	Grid	751994.9317	3858845.883	237.09	741	Grid	752155.875	3859119.085	194.14	786	Grid	751592.6208	3860302.854	141.46
697	Grid	751996.8053	3858751.428	242.5	742	Grid	752085.3343	3859279.735	200.26	787	Grid	751505.6917	3860336.492	142.32
698	Grid	751998.6788	3858656.972	245.6	743	Grid	752014.7935	3859440.385	176.02	788	Grid	751418.7626	3860370.13	141.5
699	Grid	752000.5523	3858562.517	243.12	744	Grid	751944.2528	3859601.035	160.31	789	Grid	751331.8335	3860403.769	141
700	Grid	752002.4259	3858468.062	243.71	745	Grid	751873.7121	3859761.685	146.52	790	Grid	751244.9045	3860437.407	142
701	Grid	752004.2994	3858373.607	257.71	746	Grid	751803.1713	3859922.335	146	791	Grid	751157.9754	3860471.045	142
702	Grid	752006.1729	3858279.151	279.82	747	Grid	751732.6306	3860082.985	144.96	792	Grid	751071.0463	3860504.683	142
703	Grid	752008.0464	3858184.696	295.76	748	Grid	751615.5446	3860194.97	142.23	793	Grid	750984.1172	3860538.321	141.01
704	Grid	752009.92	3858090.241	290.38	749	Grid	751451.9134	3860258.289	142.48	794	Grid	750897.1881	3860571.959	141
705	Grid	752011.7935	3857995.785	279.54	750	Grid	751288.2822	3860321.607	142.85	795	Grid	750810.259	3860605.597	140
706	Grid	752013.667	3857901.33	290.52	751	Grid	751124.6509	3860384.926	142	796	Grid	750723.3299	3860639.235	140
707	Grid	752015.5406	3857806.875	272.93	752	Grid	750961.0197	3860448.245	141.24	797	Grid	750636.4008	3860672.873	139
708	Grid	752017.4141	3857712.42	255.46	753	Grid	750797.3885	3860511.564	140.54	798	Grid	752291.1257	3859040.743	182.23
709	Grid	752019.2876	3857617.964	262.31	754	Grid	750633.7572	3860574.883	140	799	Grid	752292.9992	3858946.288	201.14
710	Grid	752021.1612	3857523.509	280.46	755	Grid	752193.0189	3858944.305	207.45	800	Grid	752294.8727	3858851.832	202.3
711	Grid	752023.0347	3857429.054	294.81	756	Grid	752194.8924	3858849.849	211.5	801	Grid	752296.7463	3858757.377	182.24
712	Grid	752055.5555	3859117.874	203.87	757	Grid	752196.7659	3858755.394	213.62	802	Grid	752298.6198	3858662.922	194.14
713	Grid	751984.3365	3859280.069	197.28	758	Grid	752198.6395	3858660.939	219.85	803	Grid	752300.4933	3858568.467	208.58
714	Grid	751913.1175	3859442.264	206.09	759	Grid	752200.513	3858566.483	224.84	804	Grid	752302.3669	3858474.011	222.74
715	Grid	751841.8985	3859604.459	175.45	760	Grid	752202.3865	3858472.028	213.6	805	Grid	752304.2404	3858379.556	239.47
716	Grid	751770.6795	3859766.653	146	761	Grid	752204.2601	3858377.573	231.32	806	Grid	752306.1139	3858285.101	234.55
717	Grid	751699.4605	3859928.848	145	762	Grid	752206.1336	3858283.118	244.14	807	Grid	752307.9874	3858190.645	232.41
718	Grid	751545.6392	3860123.007	143	763	Grid	752208.0071	3858188.662	259.76	808	Grid	752309.861	3858096.19	241.52
719	Grid	751380.4346	3860186.934	143.01	764	Grid	752209.8806	3858094.207	267.12	809	Grid	752311.7345	3858001.735	255.43
720	Grid	751215.23	3860250.862	143	765	Grid	752211.7542	3857999.752	275.01	810	Grid	752313.608	3857907.279	260.05

TABLE D-11: Receptors Locations and Elevations

Receptor		UTMs		ELEV (m)	Receptor		UTMs		ELEV (m)	Receptor		UTMs		ELEV (m)
#	Type	X (m)	Y (m)		#	Type	X (m)	Y (m)		#	Type	X (m)	Y (m)	
811	Grid	752315.4816	3857812.824	277.43	856	Grid	752413.5884	3857909.263	243.15	901	Grid	752507.9481	3858194.612	214.38
812	Grid	752317.3551	3857718.369	282.46	857	Grid	752415.4619	3857814.807	252.87	902	Grid	752509.8216	3858100.156	214.27
813	Grid	752319.2286	3857623.914	275.73	858	Grid	752417.3354	3857720.352	265.08	903	Grid	752511.6952	3858005.701	214.37
814	Grid	752321.1022	3857529.458	265.81	859	Grid	752419.209	3857625.897	263.45	904	Grid	752513.5687	3857911.246	217.81
815	Grid	752322.9757	3857435.003	269.24	860	Grid	752421.0825	3857531.441	233.48	905	Grid	752515.4422	3857816.79	234.83
816	Grid	752354.0721	3859127.067	158.17	861	Grid	752422.956	3857436.986	255.77	906	Grid	752517.3158	3857722.335	247.17
817	Grid	752317.0383	3859211.409	157.16	862	Grid	752454.4382	3859128.172	159.77	907	Grid	752519.1893	3857627.88	237.93
818	Grid	752280.0044	3859295.75	154.22	863	Grid	752417.7901	3859211.635	156.04	908	Grid	752521.0628	3857533.425	217.68
819	Grid	752242.9705	3859380.091	152.6	864	Grid	752381.142	3859295.097	155.1	909	Grid	752522.9364	3857438.969	255.04
820	Grid	752205.9366	3859464.433	152.44	865	Grid	752344.4939	3859378.56	154.89	910	Grid	752554.759	3859129.38	160.77
821	Grid	752168.9027	3859548.774	152.5	866	Grid	752307.8458	3859462.023	155.13	911	Grid	752518.4512	3859212.067	159.59
822	Grid	752131.8688	3859633.115	152.72	867	Grid	752271.1977	3859545.486	153.83	912	Grid	752482.1435	3859294.755	159.1
823	Grid	752094.835	3859717.457	151.16	868	Grid	752234.5496	3859628.948	152.69	913	Grid	752445.8358	3859377.443	162.3
824	Grid	752057.8011	3859801.798	150.59	869	Grid	752197.9014	3859712.411	151.64	914	Grid	752409.528	3859460.13	162.86
825	Grid	752020.7672	3859886.139	148.54	870	Grid	752161.2533	3859795.874	150.55	915	Grid	752373.2203	3859542.818	159.57
826	Grid	751983.7333	3859970.48	147.73	871	Grid	752124.6052	3859879.337	149	916	Grid	752336.9126	3859625.505	157.5
827	Grid	751946.6994	3860054.822	146.83	872	Grid	752087.9571	3859962.799	148	917	Grid	752300.6049	3859708.193	152.05
828	Grid	751909.6655	3860139.163	145.11	873	Grid	752051.309	3860046.262	147	918	Grid	752264.2971	3859790.88	151
829	Grid	751872.6317	3860223.504	143.29	874	Grid	752014.6609	3860129.725	145.63	919	Grid	752227.9894	3859873.568	150
830	Grid	751749.6914	3860341.088	141	875	Grid	751978.0128	3860213.188	144.69	920	Grid	752191.6817	3859956.255	148.2
831	Grid	751663.785	3860374.33	141	876	Grid	751941.3646	3860296.65	143.91	921	Grid	752155.3739	3860038.943	147.45
832	Grid	751577.8786	3860407.573	141	877	Grid	751819.705	3860413.009	141	922	Grid	752119.0662	3860121.63	146.84
833	Grid	751491.9722	3860440.815	141.94	878	Grid	751734.6935	3860445.905	141	923	Grid	752082.7585	3860204.318	146
834	Grid	751406.0658	3860474.057	141	879	Grid	751649.6819	3860478.801	141	924	Grid	752046.4508	3860287.006	145.18
835	Grid	751320.1594	3860507.3	141	880	Grid	751564.6704	3860511.697	141	925	Grid	752010.143	3860369.693	144
836	Grid	751234.253	3860540.542	141.52	881	Grid	751479.6588	3860544.594	141	926	Grid	751889.6133	3860484.971	141.66
837	Grid	751148.3466	3860573.784	141.82	882	Grid	751394.6473	3860577.49	141	927	Grid	751805.3914	3860517.562	141
838	Grid	751062.4402	3860607.027	142	883	Grid	751309.6358	3860610.386	141.06	928	Grid	751721.1694	3860550.152	141.25
839	Grid	750976.5338	3860640.269	141	884	Grid	751224.6242	3860643.282	141.01	929	Grid	751636.9475	3860582.743	142.2
840	Grid	750890.6274	3860673.511	140	885	Grid	751139.6127	3860676.178	141	930	Grid	751552.7255	3860615.333	141
841	Grid	750804.721	3860706.754	140	886	Grid	751054.6012	3860709.074	141	931	Grid	751468.5036	3860647.924	141
842	Grid	750718.8146	3860739.996	139	887	Grid	750969.5896	3860741.97	140.53	932	Grid	751384.2816	3860680.514	141
843	Grid	750632.9082	3860773.239	138.98	888	Grid	750884.5781	3860774.866	140	933	Grid	751300.0596	3860713.105	141
844	Grid	752391.106	3859042.726	166.11	889	Grid	750799.5665	3860807.762	139	934	Grid	751215.8377	3860745.696	141
845	Grid	752392.9795	3858948.271	169.11	890	Grid	750714.555	3860840.658	138.02	935	Grid	751131.6157	3860778.286	141
846	Grid	752394.8531	3858853.816	170.92	891	Grid	750629.5435	3860873.554	138	936	Grid	751047.3938	3860810.877	140.72
847	Grid	752396.7266	3858759.36	192.15	892	Grid	752491.0864	3859044.709	160.11	937	Grid	750963.1718	3860843.467	140
848	Grid	752398.6001	3858664.905	208.27	893	Grid	752492.9599	3858950.254	163.13	938	Grid	750878.9499	3860876.058	139.27
849	Grid	752400.4737	3858570.45	209.35	894	Grid	752494.8334	3858855.799	166.16	939	Grid	750794.7279	3860908.648	138
850	Grid	752402.3472	3858475.994	218.4	895	Grid	752496.7069	3858761.343	169.2	940	Grid	750710.5059	3860941.239	138
851	Grid	752404.2207	3858381.539	220.56	896	Grid	752498.5805	3858666.888	182.96	941	Grid	750626.284	3860973.829	137.28
852	Grid	752406.0943	3858287.084	214.46	897	Grid	752500.454	3858572.433	184.21	942	Grid	752591.0667	3859046.692	160.77
853	Grid	752407.9678	3858192.628	223.52	898	Grid	752502.3275	3858477.977	191.88	943	Grid	752592.9402	3858952.237	159
854	Grid	752409.8413	3858098.173	220.21	899	Grid	752504.2011	3858383.522	197.24	944	Grid	752594.8137	3858857.782	160.55
855	Grid	752411.7148	3858003.718	229.02	900	Grid	752506.0746	3858289.067	203.3	945	Grid	752596.6873	3858763.326	160.48

TABLE D-11: Receptors Locations and Elevations

Receptor		UTMs		ELEV (m)	Receptor		UTMs		ELEV (m)	Receptor		UTMs		ELEV (m)
#	Type	X (m)	Y (m)		#	Type	X (m)	Y (m)		#	Type	X (m)	Y (m)	
946	Grid	752598.5608	3858668.871	159.09	991	Grid	750390.5123	3856797.884	316.15	1036	Grid	750850.529	3856392.898	294.76
947	Grid	752600.4343	3858574.416	162.27	992	Grid	750229.5683	3856795.572	301.46	1037	Grid	750991.4749	3856453.895	269.16
948	Grid	752602.3079	3858479.961	174.35	993	Grid	750703.8376	3856731.861	303.03	1038	Grid	751132.4208	3856514.892	266.88
949	Grid	752604.1814	3858385.505	183.51	994	Grid	750844.7835	3856792.857	308.09	1039	Grid	751273.3666	3856575.888	300.03
950	Grid	752606.0549	3858291.05	198.46	995	Grid	750985.7294	3856853.854	296.93	1040	Grid	751442.3835	3856708.359	324.92
951	Grid	752607.9284	3858196.595	206.31	996	Grid	751154.7463	3856986.325	306.49	1041	Grid	751498.5256	3856851.308	335.18
952	Grid	752609.802	3858102.139	208.8	997	Grid	751210.8883	3857129.274	312.22	1042	Grid	751554.6676	3856994.257	325.16
953	Grid	752611.6755	3858007.684	205.45	998	Grid	751267.0303	3857272.223	317.09	1043	Grid	751610.8096	3857137.206	330.42
954	Grid	752613.549	3857913.229	201.28	999	Grid	750552.8926	3856700.206	296.83	1044	Grid	751666.9516	3857280.155	295.13
955	Grid	752615.4226	3857818.774	212.47	1000	Grid	750391.9486	3856697.894	302.41	1045	Grid	750558.6381	3856300.247	313.26
956	Grid	752617.2961	3857724.318	224.63	1001	Grid	750231.0046	3856695.582	279.93	1046	Grid	750397.6941	3856297.935	316.85
957	Grid	752619.1696	3857629.863	220.35	1002	Grid	750705.274	3856631.871	302.23	1047	Grid	750236.7501	3856295.623	318.98
958	Grid	752621.0432	3857535.408	206.49	1003	Grid	750846.2198	3856692.867	301.22	1048	Grid	750711.0195	3856231.912	303.03
959	Grid	752622.9167	3857440.952	229.48	1004	Grid	750987.1657	3856753.864	292.86	1049	Grid	750851.9653	3856292.909	310.7
960	Grid	750624.7464	3857301.3	299.31	1005	Grid	751128.1116	3856814.861	311.43	1050	Grid	750992.9112	3856353.905	292.59
961	Grid	750463.8024	3857298.988	287.75	1006	Grid	751226.6556	3856916.834	305.6	1051	Grid	751133.8571	3856414.902	262
962	Grid	750302.8584	3857296.676	277.65	1007	Grid	751282.7976	3857059.783	330.2	1052	Grid	751274.803	3856475.899	288.04
963	Grid	750696.6557	3857231.809	288.72	1008	Grid	751338.9396	3857202.732	313.37	1053	Grid	751415.7489	3856536.895	291.06
964	Grid	750545.7108	3857200.155	298.47	1009	Grid	750554.329	3856600.217	290.72	1054	Grid	751514.2929	3856638.868	307.15
965	Grid	750384.7668	3857197.843	302.66	1010	Grid	750393.385	3856597.905	288.59	1055	Grid	751570.4349	3856781.817	327.51
966	Grid	750223.8228	3857195.531	278.74	1011	Grid	750232.441	3856595.593	269.9	1056	Grid	751626.5769	3856924.766	338.39
967	Grid	750698.0921	3857131.819	300.15	1012	Grid	750706.7103	3856531.881	292.9	1057	Grid	751682.7189	3857067.715	310.57
968	Grid	750867.109	3857264.29	301.56	1013	Grid	750847.6562	3856592.878	297.82	1058	Grid	751738.861	3857210.664	314.07
969	Grid	750547.1471	3857100.165	317.74	1014	Grid	750988.6021	3856653.874	284.65	1059	Grid	750560.0745	3856200.258	282.32
970	Grid	750386.2031	3857097.853	310.4	1015	Grid	751129.548	3856714.871	292.26	1060	Grid	750399.1305	3856197.946	294.96
971	Grid	750225.2591	3857095.541	288.01	1016	Grid	751298.5649	3856847.342	298.62	1061	Grid	750238.1865	3856195.634	298.49
972	Grid	750699.5284	3857031.83	303.18	1017	Grid	751354.7069	3856990.291	317.93	1062	Grid	750712.4558	3856131.922	280.39
973	Grid	750840.4743	3857092.826	287.9	1018	Grid	751410.849	3857133.24	321.54	1063	Grid	750853.4017	3856192.919	293.9
974	Grid	750939.0183	3857194.799	309.46	1019	Grid	751466.991	3857276.189	282.19	1064	Grid	750994.3476	3856253.916	290.95
975	Grid	750548.5835	3857000.175	312.18	1020	Grid	750555.7654	3856500.227	278.19	1065	Grid	751135.2935	3856314.912	269.57
976	Grid	750387.6395	3856997.863	314.3	1021	Grid	750394.8214	3856497.915	269.15	1066	Grid	751276.2394	3856375.909	260.19
977	Grid	750226.6955	3856995.551	272.84	1022	Grid	750233.8774	3856495.603	268.23	1067	Grid	751417.1853	3856436.906	272.62
978	Grid	750700.9648	3856931.84	316.96	1023	Grid	750708.1467	3856431.891	290.73	1068	Grid	751586.2022	3856569.377	281.85
979	Grid	750841.9107	3856992.837	302.53	1024	Grid	750849.0926	3856492.888	284.07	1069	Grid	751642.3442	3856712.326	306.52
980	Grid	751010.9276	3857125.308	315.6	1025	Grid	750990.0385	3856553.885	274.86	1070	Grid	751698.4862	3856855.275	319.72
981	Grid	751067.0696	3857268.257	301.63	1026	Grid	751130.9844	3856614.881	273.64	1071	Grid	751754.6283	3856998.224	322.89
982	Grid	750550.0199	3856900.186	298.19	1027	Grid	751271.9303	3856675.878	288.85	1072	Grid	751810.7703	3857141.173	295.08
983	Grid	750389.0759	3856897.874	310.3	1028	Grid	751370.4742	3856777.851	294.24	1073	Grid	751866.9123	3857284.122	271.35
984	Grid	750228.1319	3856895.562	305.44	1029	Grid	751426.6162	3856920.8	304.3	1074	Grid	750561.5109	3856100.268	264.33
985	Grid	750702.4012	3856831.85	304.49	1030	Grid	751482.7583	3857063.749	326.45	1075	Grid	750400.5669	3856097.956	277
986	Grid	750843.3471	3856892.847	318.68	1031	Grid	751538.9003	3857206.698	302.07	1076	Grid	750239.6229	3856095.644	282.62
987	Grid	750984.293	3856953.843	311.51	1032	Grid	750557.2018	3856400.237	290.43	1077	Grid	750713.8922	3856031.933	260.92
988	Grid	751082.8369	3857055.816	319.75	1033	Grid	750396.2578	3856397.925	285.1	1078	Grid	750854.8381	3856092.929	274.4
989	Grid	751138.979	3857198.765	299.64	1034	Grid	750235.3138	3856395.613	286.08	1079	Grid	750995.784	3856153.926	280.57
990	Grid	750551.4563	3856800.196	292.92	1035	Grid	750709.5831	3856331.902	318.66	1080	Grid	751136.7299	3856214.923	265.38

TABLE D-11: Receptors Locations and Elevations

Receptor		UTMs		ELEV (m)	Receptor		UTMs		ELEV (m)	Receptor		UTMs		ELEV (m)
#	Type	X (m)	Y (m)		#	Type	X (m)	Y (m)		#	Type	X (m)	Y (m)	
1081	Grid	751277.6758	3856275.919	253.6	1126	Grid	750404.876	3855797.987	235.57	1171	Grid	751284.8577	3855775.971	249.27
1082	Grid	751418.6217	3856336.916	256.72	1127	Grid	750243.932	3855795.675	233.09	1172	Grid	751425.8035	3855836.968	263.39
1083	Grid	751559.5675	3856397.913	298.65	1128	Grid	750718.2013	3855731.964	225.83	1173	Grid	751566.7494	3855897.964	259.31
1084	Grid	751658.1115	3856499.885	307.27	1129	Grid	750859.1472	3855792.96	228.87	1174	Grid	751707.6953	3855958.961	266.67
1085	Grid	751714.2535	3856642.834	308.54	1130	Grid	751000.0931	3855853.957	238.25	1175	Grid	751848.6412	3856019.957	289.44
1086	Grid	751770.3956	3856785.783	310.67	1131	Grid	751141.039	3855914.954	242.18	1176	Grid	752017.6581	3856152.429	302.12
1087	Grid	751826.5376	3856928.732	327.75	1132	Grid	751281.9849	3855975.95	238.7	1177	Grid	752073.8001	3856295.378	309.57
1088	Grid	751882.6796	3857071.681	299.73	1133	Grid	751422.9308	3856036.947	275.26	1178	Grid	752129.9422	3856438.327	315.34
1089	Grid	751938.8216	3857214.63	279.18	1134	Grid	751563.8767	3856097.944	301.15	1179	Grid	752186.0842	3856581.275	309.64
1090	Grid	750562.9473	3856000.278	250.89	1135	Grid	751704.8226	3856158.94	293.86	1180	Grid	752242.2262	3856724.224	328.75
1091	Grid	750402.0033	3855997.966	256.76	1136	Grid	751873.8395	3856291.411	324.27	1181	Grid	752298.3682	3856867.173	295.95
1092	Grid	750241.0593	3855995.654	268.88	1137	Grid	751929.9815	3856434.36	324.76	1182	Grid	752354.5103	3857010.122	297.65
1093	Grid	750715.3286	3855931.943	246.09	1138	Grid	751986.1235	3856577.309	336	1183	Grid	752410.6523	3857153.071	307.78
1094	Grid	750856.2745	3855992.94	260	1139	Grid	752042.2655	3856720.258	329.28	1184	Grid	752466.7943	3857296.02	278.22
1095	Grid	750997.2204	3856053.936	262.23	1140	Grid	752098.4076	3856863.207	320.85	1185	Grid	750570.1291	3855500.33	220.89
1096	Grid	751138.1663	3856114.933	255.91	1141	Grid	752154.5496	3857006.156	299.62	1186	Grid	750409.1851	3855498.018	219.74
1097	Grid	751279.1121	3856175.93	249.17	1142	Grid	752210.6916	3857149.105	310.17	1187	Grid	750248.2411	3855495.706	219.55
1098	Grid	751420.058	3856236.926	266.98	1143	Grid	752266.8337	3857292.054	320.24	1188	Grid	750722.5105	3855431.995	226.31
1099	Grid	751561.0039	3856297.923	300.17	1144	Grid	750567.2564	3855700.309	226.76	1189	Grid	750863.4564	3855492.991	224.98
1100	Grid	751730.0208	3856430.394	327.19	1145	Grid	750406.3124	3855697.997	227.57	1190	Grid	751004.4022	3855553.988	224.94
1101	Grid	751786.1629	3856573.343	306.4	1146	Grid	750245.3684	3855695.685	226.04	1191	Grid	751145.3481	3855614.985	226.44
1102	Grid	751842.3049	3856716.292	329.58	1147	Grid	750719.6377	3855631.974	221.27	1192	Grid	751286.294	3855675.981	235.84
1103	Grid	751898.4469	3856859.241	316.86	1148	Grid	750860.5836	3855692.971	221.76	1193	Grid	751427.2399	3855736.978	254.97
1104	Grid	751954.5889	3857002.19	311.3	1149	Grid	751001.5295	3855753.967	228.61	1194	Grid	751568.1858	3855797.974	245.61
1105	Grid	752010.731	3857145.139	286.71	1150	Grid	751142.4754	3855814.964	231.29	1195	Grid	751709.1317	3855858.971	266.32
1106	Grid	752066.873	3857288.088	309.99	1151	Grid	751283.4213	3855875.961	238.59	1196	Grid	751850.0776	3855919.968	265.25
1107	Grid	750564.3836	3855900.289	240.24	1152	Grid	751424.3672	3855936.957	266.02	1197	Grid	751991.0235	3855980.964	270.15
1108	Grid	750403.4396	3855897.977	245.85	1153	Grid	751565.3131	3855997.954	274.22	1198	Grid	752089.5674	3856082.937	277.03
1109	Grid	750242.4956	3855895.665	250.51	1154	Grid	751706.2589	3856058.95	277.75	1199	Grid	752145.7095	3856225.886	284.93
1110	Grid	750716.765	3855831.953	230.74	1155	Grid	751847.2048	3856119.947	314.13	1200	Grid	752201.8515	3856368.835	289.76
1111	Grid	750857.7109	3855892.95	241.26	1156	Grid	751945.7488	3856221.92	329.36	1201	Grid	752257.9935	3856511.784	305.88
1112	Grid	750998.6567	3855953.947	250.53	1157	Grid	752001.8908	3856364.869	316.91	1202	Grid	752314.1355	3856654.733	317.95
1113	Grid	751139.6026	3856014.943	252.65	1158	Grid	752058.0328	3856507.818	328.76	1203	Grid	752370.2776	3856797.682	305.43
1114	Grid	751280.5485	3856075.94	241.39	1159	Grid	752114.1749	3856650.767	313.49	1204	Grid	752426.4196	3856940.631	269.91
1115	Grid	751421.4944	3856136.937	271.94	1160	Grid	752170.3169	3856793.716	329.86	1205	Grid	752482.5616	3857083.58	269.49
1116	Grid	751562.4403	3856197.933	312.21	1161	Grid	752226.4589	3856936.665	306.64	1206	Grid	752538.7036	3857226.529	280.13
1117	Grid	751703.3862	3856258.93	316.14	1162	Grid	752282.6009	3857079.614	315.62	1207	Grid	750571.5655	3855400.34	227.13
1118	Grid	751801.9301	3856360.903	321.58	1163	Grid	752338.743	3857222.563	316.6	1208	Grid	750410.6215	3855398.028	227.52
1119	Grid	751858.0722	3856503.852	323.71	1164	Grid	750568.6928	3855600.32	221.6	1209	Grid	750249.6775	3855395.716	227.34
1120	Grid	751914.2142	3856646.801	325.01	1165	Grid	750407.7488	3855598.008	221.43	1210	Grid	750320.9399	3857396.93	287.88
1121	Grid	751970.3562	3856789.75	340.12	1166	Grid	750246.8048	3855595.696	219.78	1211	Grid	750420.9298	3857398.35	291.12
1122	Grid	752026.4983	3856932.699	318.15	1167	Grid	750721.0741	3855531.984	220.84	1212	Grid	750520.9197	3857399.771	267.64
1123	Grid	752082.6403	3857075.647	291.33	1168	Grid	750862.02	3855592.981	221.98	1213	Grid	750620.9097	3857401.191	284.22
1124	Grid	752138.7823	3857218.596	318.29	1169	Grid	751002.9659	3855653.978	224.03	1214	Grid	750068.5429	3856500.634	282.2
1125	Grid	750565.82	3855800.299	233.48	1170	Grid	751143.9118	3855714.974	229.28	1215	Grid	749904.0149	3856499.234	307.7

TABLE D-11: Receptors Locations and Elevations

Receptor		UTMs		ELEV (m)	Receptor		UTMs		ELEV (m)	Receptor		UTMs		ELEV (m)
#	Type	X (m)	Y (m)		#	Type	X (m)	Y (m)		#	Type	X (m)	Y (m)	
1216	Grid	750069.3938	3856400.637	305.25	1261	Grid	750924.1527	3855290.983	235.41	1306	Grid	751741.2079	3855650.299	243.67
1217	Grid	749904.8658	3856399.237	329.91	1262	Grid	751074.8902	3855355.182	229.57	1307	Grid	751801.3341	3855800.87	254.25
1218	Grid	750070.2447	3856300.641	327.35	1263	Grid	751225.6276	3855419.38	228	1308	Grid	750166.1229	3854701.399	387.71
1219	Grid	749905.7167	3856299.241	317.59	1264	Grid	751406.7446	3855559.658	234.44	1309	Grid	750001.5949	3854699.999	355.44
1220	Grid	750071.0956	3856200.644	297	1265	Grid	750163.5702	3855001.388	314.04	1310	Grid	749837.0669	3854698.599	300.33
1221	Grid	749906.5676	3856199.244	296.97	1266	Grid	749999.0422	3854999.988	287.18	1311	Grid	750323.6148	3854633.779	383.46
1222	Grid	750071.9464	3856100.648	275.6	1267	Grid	749834.5142	3854998.588	319.55	1312	Grid	750472.3689	3854697.134	312.52
1223	Grid	749907.4184	3856099.248	281.95	1268	Grid	750321.7594	3854934.066	328.37	1313	Grid	750621.1229	3854760.488	271.66
1224	Grid	750072.7973	3856000.652	269.74	1269	Grid	750471.908	3854998.014	301.67	1314	Grid	750769.877	3854823.842	281.42
1225	Grid	749908.2693	3855999.252	270.46	1270	Grid	750622.0567	3855061.962	272.82	1315	Grid	750918.631	3854887.196	304.39
1226	Grid	750073.6482	3855900.655	253.66	1271	Grid	750772.2053	3855125.91	241.21	1316	Grid	751067.3851	3854950.55	277.42
1227	Grid	749909.1202	3855899.255	255.77	1272	Grid	750922.3539	3855189.858	245.88	1317	Grid	751216.1392	3855013.904	250.35
1228	Grid	750074.4991	3855800.659	240.01	1273	Grid	751072.5026	3855253.806	234.89	1318	Grid	751364.8932	3855077.258	240.13
1229	Grid	749909.9711	3855799.259	238.27	1274	Grid	751222.6512	3855317.754	230.82	1319	Grid	751513.6473	3855140.612	232.06
1230	Grid	750075.35	3855700.663	226.57	1275	Grid	751372.7998	3855381.702	230.96	1320	Grid	751692.3812	3855279.044	240.37
1231	Grid	749910.822	3855699.263	231.91	1276	Grid	751478.135	3855489.457	232	1321	Grid	751752.3409	3855429.198	249.91
1232	Grid	750076.2009	3855600.666	215.22	1277	Grid	751538.6568	3855641.019	239.84	1322	Grid	751812.3005	3855579.353	243.88
1233	Grid	749911.6729	3855599.266	219.11	1278	Grid	750164.4211	3854901.392	318.44	1323	Grid	751872.2602	3855729.507	249.93
1234	Grid	750077.0518	3855500.67	220.1	1279	Grid	749999.8931	3854899.992	309.64	1324	Grid	751932.2199	3855879.662	256.71
1235	Grid	749912.5238	3855499.27	216.64	1280	Grid	749835.3651	3854898.592	336.25	1325	Grid	750166.9738	3854601.402	422.14
1236	Grid	750077.9027	3855400.673	226.11	1281	Grid	750322.3505	3854833.959	387.08	1326	Grid	750002.4458	3854600.002	364.98
1237	Grid	749913.3747	3855399.273	226.2	1282	Grid	750471.9796	3854897.685	336.31	1327	Grid	749837.9178	3854598.602	298.45
1238	Grid	750313.9397	3855332.17	233.58	1283	Grid	750621.6087	3854961.412	278.66	1328	Grid	749920.899	3856598.09	294.77
1239	Grid	750161.0175	3855301.377	232.88	1284	Grid	750771.2378	3855025.139	248.5	1329	Grid	750020.8981	3856597.649	268.6
1240	Grid	749996.4895	3855299.977	233.48	1285	Grid	750920.8669	3855088.866	254.64	1330	Grid	750120.8971	3856597.209	264.63
1241	Grid	749831.9615	3855298.577	233.22	1286	Grid	751070.496	3855152.593	248.61	1331	Grid	749722.4801	3856092.888	278.61
1242	Grid	750314.7906	3855232.174	258.35	1287	Grid	751220.125	3855216.319	235.4	1332	Grid	749624.3701	3856091.446	261.88
1243	Grid	750456.107	3855292.36	236.76	1288	Grid	751369.7541	3855280.046	231.28	1333	Grid	749526.2601	3856090.003	268.55
1244	Grid	750161.8684	3855201.381	244.49	1289	Grid	751549.5394	3855419.292	233.48	1334	Grid	749428.1501	3856088.561	247.07
1245	Grid	749997.3404	3855199.981	248.76	1290	Grid	751609.8518	3855570.329	239.33	1335	Grid	749723.9503	3855992.899	264.77
1246	Grid	749832.8124	3855198.581	260.05	1291	Grid	751670.1642	3855721.367	257.16	1336	Grid	749625.8403	3855991.457	254.64
1247	Grid	750315.6415	3855132.178	269.55	1292	Grid	750165.272	3854801.395	361.08	1337	Grid	749527.7303	3855990.014	259.36
1248	Grid	750456.9579	3855192.364	264.23	1293	Grid	750000.744	3854799.995	347.49	1338	Grid	749429.6203	3855988.572	243.97
1249	Grid	750598.2742	3855252.55	239.66	1294	Grid	749836.216	3854798.595	332.8	1339	Grid	749725.4204	3855892.91	252.97
1250	Grid	750739.5906	3855312.737	230.99	1295	Grid	750322.9705	3854733.864	403.52	1340	Grid	749627.3104	3855891.467	247.24
1251	Grid	750880.9069	3855372.923	230.98	1296	Grid	750472.1378	3854797.394	349.26	1341	Grid	749529.2004	3855890.025	255.9
1252	Grid	751022.2233	3855433.11	227.97	1297	Grid	750621.305	3854860.924	277.86	1342	Grid	749431.0904	3855888.582	243.16
1253	Grid	751163.5396	3855493.296	226.97	1298	Grid	750770.4723	3854924.454	260.02	1343	Grid	749726.8905	3855792.921	241.25
1254	Grid	750162.7193	3855101.384	276.2	1299	Grid	750919.6396	3854987.984	276.57	1344	Grid	749628.7805	3855791.478	243.05
1255	Grid	749998.1913	3855099.984	266.78	1300	Grid	751068.8068	3855051.514	271.34	1345	Grid	749530.6705	3855790.036	234.32
1256	Grid	749833.6633	3855098.584	302.45	1301	Grid	751217.9741	3855115.044	241.77	1346	Grid	749432.5605	3855788.593	218.12
1257	Grid	750321.2029	3855034.187	288.92	1302	Grid	751367.1414	3855178.575	235.68	1347	Grid	749728.3606	3855692.932	230.38
1258	Grid	750471.9404	3855098.386	283.84	1303	Grid	751516.3086	3855242.105	231	1348	Grid	749630.2506	3855691.489	233.12
1259	Grid	750622.6778	3855162.585	248.3	1304	Grid	751620.9554	3855349.156	232.05	1349	Grid	749532.1406	3855690.047	215.84
1260	Grid	750773.4153	3855226.784	233.82	1305	Grid	751681.0816	3855499.727	241.99	1350	Grid	749434.0306	3855688.604	207.84

TABLE D-11: Receptors Locations and Elevations

Receptor		UTMs		ELEV (m)	Receptor		UTMs		ELEV (m)	Receptor		UTMs		ELEV (m)
#	Type	X (m)	Y (m)		#	Type	X (m)	Y (m)		#	Type	X (m)	Y (m)	
1351	Grid	750162.0386	3855736.674	230.49	1396	Grid	749928.631	3854530.499	337.35	1441	Grid	750892.5782	3854639.189	373.82
1352	Grid	749729.8308	3855592.942	223.23	1397	Grid	749844.1122	3854494.504	341.95	1442	Grid	750979.5828	3854676.244	329.34
1353	Grid	749631.7208	3855591.5	219.26	1398	Grid	749746.0022	3854493.061	298.15	1443	Grid	751066.5874	3854713.298	299.72
1354	Grid	749533.6108	3855590.057	208.16	1399	Grid	749647.8922	3854491.619	258.27	1444	Grid	751153.5921	3854750.353	316.69
1355	Grid	749435.5008	3855588.615	214.07	1400	Grid	749549.7822	3854490.176	308.49	1445	Grid	751276.7532	3854874.789	260.78
1356	Grid	749731.3009	3855492.953	213.11	1401	Grid	749451.6722	3854488.734	310.57	1446	Grid	751312.9097	3854962.17	253.95
1357	Grid	749633.1909	3855491.511	209.1	1402	Grid	749935.0728	3854432.628	348.56	1447	Grid	751457.5357	3855311.697	231
1358	Grid	749535.0809	3855490.068	214.75	1403	Grid	750024.5633	3854470.741	358.26	1448	Grid	749848.5226	3854194.536	329.62
1359	Grid	749436.9709	3855488.626	221.49	1404	Grid	750114.0538	3854508.854	407.25	1449	Grid	749750.4126	3854193.094	277.72
1360	Grid	749732.771	3855392.964	220.54	1405	Grid	751321.5863	3855467.368	230	1450	Grid	749652.3026	3854191.651	315.25
1361	Grid	749634.661	3855391.521	217.73	1406	Grid	749845.5823	3854394.515	310.13	1451	Grid	749554.1926	3854190.209	325.94
1362	Grid	749536.551	3855390.079	229.54	1407	Grid	749747.4723	3854393.072	288.84	1452	Grid	749456.0826	3854188.766	319.91
1363	Grid	749438.441	3855388.636	233.55	1408	Grid	749649.3623	3854391.63	267.72	1453	Grid	749526.671	3856189.892	282.1
1364	Grid	749734.2412	3855292.975	243.07	1409	Grid	749551.2523	3854390.187	317.28	1454	Grid	749626.662	3856191.234	269.09
1365	Grid	749636.1312	3855291.532	234.81	1410	Grid	749453.1423	3854388.745	304.11	1455	Grid	749726.653	3856192.576	281.5
1366	Grid	749538.0212	3855290.09	256.82	1411	Grid	749935.2172	3854332.074	304.17	1456	Grid	749813.9767	3855950.81	265.09
1367	Grid	749439.9112	3855288.647	244.33	1412	Grid	750023.3819	3854369.622	326.23	1457	Grid	751259.7395	3855551.098	228.97
1368	Grid	749735.7113	3855192.986	261.51	1413	Grid	750111.5465	3854407.171	355.58	1458	Grid	749274.6876	3855687.074	207.51
1369	Grid	749637.6013	3855191.543	268	1414	Grid	750199.7112	3854444.719	394.38	1459	Grid	749113.3726	3855684.904	212.16
1370	Grid	749539.4913	3855190.101	273.05	1415	Grid	750287.8759	3854482.268	366.63	1460	Grid	749276.0326	3855587.083	216.83
1371	Grid	749441.3813	3855188.658	277.1	1416	Grid	750376.0406	3854519.816	384.3	1461	Grid	749114.7176	3855584.913	217.83
1372	Grid	749737.1814	3855092.996	270.7	1417	Grid	750464.2053	3854557.365	349.04	1462	Grid	749277.3777	3855487.092	220.36
1373	Grid	749639.0714	3855091.554	289.94	1418	Grid	750552.37	3854594.913	291.91	1463	Grid	749116.0627	3855484.922	234.16
1374	Grid	749540.9614	3855090.111	282.31	1419	Grid	750640.5347	3854632.462	271.21	1464	Grid	749278.7228	3855387.101	230.72
1375	Grid	749442.8514	3855088.669	273.37	1420	Grid	750728.6994	3854670.01	304	1465	Grid	749117.4078	3855384.931	265.55
1376	Grid	749738.6516	3854993.007	291.15	1421	Grid	750816.8641	3854707.559	316.22	1466	Grid	749280.0679	3855287.11	224.52
1377	Grid	749640.5416	3854991.565	309.71	1422	Grid	750905.0288	3854745.107	340.58	1467	Grid	749118.7529	3855284.94	285.59
1378	Grid	749542.4316	3854990.122	278.06	1423	Grid	750993.1935	3854782.656	315.54	1468	Grid	749281.4129	3855187.119	230.68
1379	Grid	749444.3216	3854988.68	280.28	1424	Grid	751081.3582	3854820.204	281.16	1469	Grid	749120.0979	3855184.949	274.39
1380	Grid	749740.1217	3854893.018	326.6	1425	Grid	749847.0525	3854294.525	310.07	1470	Grid	749282.758	3855087.128	249.81
1381	Grid	749642.0117	3854891.575	306.21	1426	Grid	749748.9425	3854293.083	281.25	1471	Grid	749121.443	3855084.958	242.14
1382	Grid	749543.9017	3854890.133	280.93	1427	Grid	749650.8325	3854291.64	286.24	1472	Grid	749284.1031	3854987.137	248.56
1383	Grid	749445.7917	3854888.69	273.8	1428	Grid	749552.7225	3854290.198	327.02	1473	Grid	749122.7881	3854984.967	286.41
1384	Grid	749741.5918	3854793.029	318.55	1429	Grid	749454.6125	3854288.755	273.12	1474	Grid	749285.4482	3854887.146	249.73
1385	Grid	749643.4818	3854791.586	286.6	1430	Grid	749935.5272	3854231.591	348.52	1475	Grid	749124.1332	3854884.976	294.43
1386	Grid	749545.3718	3854790.144	275.95	1431	Grid	750022.5319	3854268.645	354.06	1476	Grid	749286.7932	3854787.155	259.22
1387	Grid	749447.2618	3854788.701	262.27	1432	Grid	750109.5365	3854305.699	380.84	1477	Grid	749125.4782	3854784.985	282.81
1388	Grid	749743.0619	3854693.04	276.11	1433	Grid	750196.5411	3854342.754	377.72	1478	Grid	749288.1383	3854687.165	261.72
1389	Grid	749644.9519	3854691.597	272.4	1434	Grid	750283.5458	3854379.808	373.87	1479	Grid	749126.8233	3854684.995	289.93
1390	Grid	749546.8419	3854690.155	255.89	1435	Grid	750370.5504	3854416.863	325.53	1480	Grid	749289.4834	3854587.174	260.02
1391	Grid	749448.7319	3854688.712	256.39	1436	Grid	750457.555	3854453.917	348.73	1481	Grid	749128.1684	3854585.004	317.65
1392	Grid	749744.5321	3854593.05	299.07	1437	Grid	750544.5597	3854490.972	288.94	1482	Grid	749290.8284	3854487.183	257.07
1393	Grid	749646.4221	3854591.608	257.94	1438	Grid	750631.5643	3854528.026	280.3	1483	Grid	749129.5134	3854485.013	294.11
1394	Grid	749548.3121	3854590.165	257.31	1439	Grid	750718.5689	3854565.08	325	1484	Grid	749292.1735	3854387.192	285.05
1395	Grid	749450.2021	3854588.723	305.33	1440	Grid	750805.5735	3854602.135	359.79	1485	Grid	749130.8585	3854385.022	266.4

TABLE D-11: Receptors Locations and Elevations

Receptor		UTMs		ELEV (m)	Receptor		UTMs		ELEV (m)	Receptor		UTMs		ELEV (m)
#	Type	X (m)	Y (m)		#	Type	X (m)	Y (m)		#	Type	X (m)	Y (m)	
1486	Grid	749293.5186	3854287.201	298.14	1531	Grid	748678.8358	3855306.225	294.45	1576	Grid	748532.4454	3854659.156	314.71
1487	Grid	749132.2036	3854285.031	316.27	1532	Grid	748773.7318	3855274.025	302.1	1577	Grid	748628.077	3854626.706	346.95
1488	Grid	749294.8637	3854187.21	297.51	1533	Grid	748868.6277	3855241.825	302.61	1578	Grid	748723.7086	3854594.257	360.07
1489	Grid	749133.5487	3854185.04	358.23	1534	Grid	748963.5237	3855209.624	265.32	1579	Grid	748819.3401	3854561.807	337.51
1490	Grid	749376.8662	3854088.304	303.55	1535	Grid	748617.192	3855227.607	257.21	1580	Grid	748914.9717	3854529.357	370.67
1491	Grid	749215.5512	3854086.134	295.17	1536	Grid	748713.4632	3855194.94	268.73	1581	Grid	749010.6033	3854496.908	332.84
1492	Grid	749054.2362	3854083.964	373.66	1537	Grid	748809.7345	3855162.274	297.59	1582	Grid	748183.7597	3854677.938	307.01
1493	Grid	749449.9109	3854013.301	349.36	1538	Grid	748906.0057	3855129.607	276.12	1583	Grid	748280.0309	3854645.271	345.36
1494	Grid	749593.3101	3854063.279	349.59	1539	Grid	749002.277	3855096.94	253.15	1584	Grid	748376.3022	3854612.604	365.9
1495	Grid	749297.5538	3853987.228	334.57	1540	Grid	748555.4847	3855149.011	295.22	1585	Grid	748472.5735	3854579.937	312.84
1496	Grid	749136.2388	3853985.058	351.63	1541	Grid	748652.8138	3855115.985	275.59	1586	Grid	748568.8447	3854547.271	322.27
1497	Grid	749455.2393	3853914.699	368.34	1542	Grid	748750.143	3855082.96	300.95	1587	Grid	748665.116	3854514.604	363.68
1498	Grid	749606.6051	3853967.452	359.28	1543	Grid	748847.4722	3855049.934	271.15	1588	Grid	748761.3872	3854481.937	377
1499	Grid	749757.971	3854020.206	301.57	1544	Grid	748944.8014	3855016.908	258.51	1589	Grid	748857.6585	3854449.27	372.09
1500	Grid	749909.3368	3854072.96	329.49	1545	Grid	748493.0791	3855070.652	322.37	1590	Grid	748953.9298	3854416.603	328.81
1501	Grid	750060.7026	3854125.714	360.19	1546	Grid	748587.9751	3855038.452	302.56	1591	Grid	748121.9531	3854599.376	316.66
1502	Grid	750212.0684	3854178.467	380.52	1547	Grid	748682.871	3855006.252	320.7	1592	Grid	748218.7857	3854566.518	349.88
1503	Grid	750363.4343	3854231.221	334.48	1548	Grid	748777.767	3854974.052	319.42	1593	Grid	748315.6183	3854533.661	395.14
1504	Grid	750559.5001	3854350.5	277.7	1549	Grid	748872.6629	3854941.852	281.67	1594	Grid	748412.4509	3854500.804	354.99
1505	Grid	749298.8989	3853887.237	366.73	1550	Grid	748967.5589	3854909.652	259.7	1595	Grid	748509.2835	3854467.946	329.57
1506	Grid	749137.5839	3853885.067	418.34	1551	Grid	748431.3519	3854992.063	285.9	1596	Grid	748606.1161	3854435.089	356.99
1507	Grid	749455.5885	3853814.361	393.82	1552	Grid	748527.2064	3854959.538	342.47	1597	Grid	748702.9487	3854402.232	394.82
1508	Grid	749604.9627	3853866.42	365.04	1553	Grid	748623.0609	3854927.012	331.59	1598	Grid	748799.7813	3854369.375	344.74
1509	Grid	749754.3369	3853918.48	317.27	1554	Grid	748718.9154	3854894.487	352.9	1599	Grid	748896.6139	3854336.517	316.01
1510	Grid	749903.7111	3853970.539	298.74	1555	Grid	748814.7699	3854861.961	311.48	1600	Grid	748993.4465	3854303.66	298.59
1511	Grid	750053.0852	3854022.599	327.08	1556	Grid	748910.6244	3854829.436	265.27	1601	Grid	748060.1335	3854520.818	320.54
1512	Grid	750202.4594	3854074.659	380.8	1557	Grid	749006.4789	3854796.911	307.68	1602	Grid	748157.4627	3854487.792	345.02
1513	Grid	750351.8336	3854126.718	336.45	1558	Grid	748369.5928	3854913.485	265.29	1603	Grid	748254.7918	3854454.766	383.29
1514	Grid	750501.2078	3854178.778	291.7	1559	Grid	748466.2461	3854880.688	303.59	1604	Grid	748352.121	3854421.74	386.29
1515	Grid	750620.0066	3854270.457	311.57	1560	Grid	748562.8994	3854847.892	355.93	1605	Grid	748449.4502	3854388.715	338.73
1516	Grid	750708.2303	3854401.756	347.54	1561	Grid	748659.5526	3854815.095	373.51	1606	Grid	748546.7794	3854355.689	342.27
1517	Grid	749300.2439	3853787.246	380.73	1562	Grid	748756.2059	3854782.299	343.6	1607	Grid	748644.1086	3854322.663	375.29
1518	Grid	749138.9289	3853785.076	434.12	1563	Grid	748852.8592	3854749.502	280.94	1608	Grid	748741.4378	3854289.637	374.22
1519	Grid	748985.2671	3855699.919	209.16	1564	Grid	748949.5125	3854716.706	311.11	1609	Grid	748838.767	3854256.611	374.75
1520	Grid	748925.6076	3855620.628	214.44	1565	Grid	748307.8091	3854834.914	318.22	1610	Grid	748936.0961	3854223.586	333.86
1521	Grid	749015.9847	3855589.961	217.19	1566	Grid	748405.1382	3854801.889	275.28	1611	Grid	749033.4253	3854190.56	344.37
1522	Grid	748864.5925	3855541.797	220.4	1567	Grid	748502.4674	3854768.863	302.67	1612	Grid	747998.3031	3854442.263	356.82
1523	Grid	748959.4885	3855509.597	226.34	1568	Grid	748599.7966	3854735.837	356.52	1613	Grid	748096.0746	3854409.088	379.17
1524	Grid	748803.1602	3855463.108	239.62	1569	Grid	748697.1258	3854702.811	368.87	1614	Grid	748193.8462	3854375.912	385.11
1525	Grid	748900.4894	3855430.082	243.24	1570	Grid	748794.455	3854669.786	318.12	1615	Grid	748291.6178	3854342.736	399.9
1526	Grid	748997.8186	3855397.056	258.23	1571	Grid	748891.7842	3854636.76	320.21	1616	Grid	748389.3894	3854309.56	359.12
1527	Grid	748740.3826	3855384.875	282.43	1572	Grid	748989.1134	3854603.734	350.2	1617	Grid	748487.161	3854276.384	366.41
1528	Grid	748833.4178	3855353.306	287.43	1573	Grid	748245.5506	3854756.505	334.55	1618	Grid	748584.9326	3854243.208	385.01
1529	Grid	748926.4531	3855321.738	284.96	1574	Grid	748341.1822	3854724.056	345.82	1619	Grid	748682.7042	3854210.032	421.8
1530	Grid	749019.4883	3855290.169	298.08	1575	Grid	748436.8138	3854691.606	294.86	1620	Grid	748780.4758	3854176.856	400.47

TABLE D-11: Receptors Locations and Elevations

Receptor		UTMs		ELEV (m)	Receptor		UTMs		ELEV (m)	Receptor		UTMs		ELEV (m)
#	Type	X (m)	Y (m)		#	Type	X (m)	Y (m)		#	Type	X (m)	Y (m)	
1621	Grid	748878.2474	3854143.68	361.06	1666	Grid	748651.6679	3855916.853	200.15	1711	Grid	748130.843	3855095.292	299.86
1622	Grid	747936.1307	3854363.825	347.29	1667	Grid	748562.1881	3855779.533	213.29	1712	Grid	748262.6042	3855018.549	247
1623	Grid	748032.6351	3854331.079	381.92	1668	Grid	748601.5633	3855632.223	228.02	1713	Grid	747858.4089	3856020.488	264.17
1624	Grid	748129.1394	3854298.333	402.24	1669	Grid	748687.1315	3855520.196	236.7	1714	Grid	747768.9292	3855883.168	243.27
1625	Grid	748225.6438	3854265.588	410.64	1670	Grid	748552.5105	3855929.808	206.9	1715	Grid	747808.3043	3855735.858	248.2
1626	Grid	748322.1482	3854232.842	405.16	1671	Grid	748463.0307	3855792.487	215.99	1716	Grid	747847.6795	3855588.548	310.06
1627	Grid	748418.6525	3854200.096	408.88	1672	Grid	748502.4059	3855645.177	230.67	1717	Grid	747887.0547	3855441.238	292.18
1628	Grid	748515.1569	3854167.35	424.37	1673	Grid	748607.6617	3855459.496	256.36	1718	Grid	747926.4299	3855293.928	266.89
1629	Grid	748611.6612	3854134.604	437.26	1674	Grid	748453.3532	3855942.762	209.98	1719	Grid	747965.8051	3855146.619	273.03
1630	Grid	748708.1656	3854101.858	411.23	1675	Grid	748363.8734	3855805.441	210.48	1720	Grid	748051.3733	3855034.592	320.44
1631	Grid	748804.67	3854069.112	385.55	1676	Grid	748403.2486	3855658.132	252.65	1721	Grid	748183.1344	3854957.848	260.99
1632	Grid	748901.1743	3854036.366	406.72	1677	Grid	748442.6237	3855510.822	281.36	1722	Grid	747759.2516	3856033.443	275.11
1633	Grid	748997.6787	3854003.62	372.3	1678	Grid	748528.1919	3855398.795	277.98	1723	Grid	747669.7718	3855896.122	272.11
1634	Grid	747874.2983	3854285.272	344.23	1679	Grid	748354.1958	3855955.716	209	1724	Grid	747709.147	3855748.812	250.76
1635	Grid	747971.235	3854252.379	358.45	1680	Grid	748264.716	3855818.396	220.54	1725	Grid	747748.5222	3855601.502	287.05
1636	Grid	748068.1717	3854219.486	390.11	1681	Grid	748304.0912	3855671.086	222.23	1726	Grid	747787.8973	3855454.193	328.81
1637	Grid	748165.1085	3854186.594	371.35	1682	Grid	748343.4664	3855523.776	262.46	1727	Grid	747827.2725	3855306.883	317.31
1638	Grid	748262.0452	3854153.701	406.45	1683	Grid	748448.7221	3855338.094	245.43	1728	Grid	747866.6477	3855159.573	245.39
1639	Grid	748358.9819	3854120.809	420.98	1684	Grid	748255.0384	3855968.671	207.24	1729	Grid	747971.9035	3854973.891	336.15
1640	Grid	748455.9187	3854087.916	440.19	1685	Grid	748165.5586	3855831.35	240.44	1730	Grid	748103.6646	3854897.148	272.39
1641	Grid	748552.8554	3854055.023	440.89	1686	Grid	748204.9338	3855684.04	225.63	1731	Grid	747660.0942	3856046.397	264.4
1642	Grid	748649.7921	3854022.131	442.04	1687	Grid	748244.309	3855536.731	219.99	1732	Grid	747570.6144	3855909.077	308.28
1643	Grid	748746.7288	3853989.238	426.92	1688	Grid	748283.6842	3855389.421	235.72	1733	Grid	747609.9896	3855761.767	259.81
1644	Grid	748843.6656	3853956.346	428.02	1689	Grid	748369.2524	3855277.394	276.7	1734	Grid	747649.3648	3855614.457	270.22
1645	Grid	748940.6023	3853923.453	415.4	1690	Grid	748155.881	3855981.625	217.15	1735	Grid	747688.74	3855467.147	328.72
1646	Grid	749037.539	3853890.56	410.42	1691	Grid	748066.4013	3855844.305	230.69	1736	Grid	747728.1152	3855319.837	315.82
1647	Grid	747812.4579	3854206.721	328.94	1692	Grid	748105.7765	3855696.995	253.25	1737	Grid	747767.4903	3855172.527	273.29
1648	Grid	747909.7871	3854173.695	352.41	1693	Grid	748145.1516	3855549.685	239.39	1738	Grid	747806.8655	3855025.217	309.24
1649	Grid	748007.1162	3854140.669	382.91	1694	Grid	748184.5268	3855402.375	234.54	1739	Grid	747892.4337	3854913.191	337.72
1650	Grid	748104.4454	3854107.644	366.9	1695	Grid	748289.7826	3855216.693	265.49	1740	Grid	748024.1949	3854836.447	336.4
1651	Grid	748201.7746	3854074.618	366.65	1696	Grid	748421.5437	3855139.95	329.75	1741	Grid	747560.9368	3856059.351	250.8
1652	Grid	748299.1038	3854041.592	392.7	1697	Grid	748056.7237	3855994.579	217.82	1742	Grid	747471.4571	3855922.031	317.95
1653	Grid	748396.433	3854008.566	414.59	1698	Grid	747967.2439	3855857.259	233.52	1743	Grid	747510.8322	3855774.721	275.41
1654	Grid	748493.7622	3853975.54	408.74	1699	Grid	748006.6191	3855709.949	255.22	1744	Grid	747550.2074	3855627.411	271.8
1655	Grid	748591.0914	3853942.515	434.57	1700	Grid	748045.9943	3855562.639	278.3	1745	Grid	747589.5826	3855480.101	294.89
1656	Grid	748688.4205	3853909.489	448.97	1701	Grid	748085.3695	3855415.329	257.33	1746	Grid	747628.9578	3855332.792	340.59
1657	Grid	748785.7497	3853876.463	444.33	1702	Grid	748124.7446	3855268.02	247.86	1747	Grid	747668.333	3855185.482	302.03
1658	Grid	748883.0789	3853843.437	398.72	1703	Grid	748210.3128	3855155.993	246.9	1748	Grid	747707.7082	3855038.172	283.56
1659	Grid	748980.4081	3853810.412	367.18	1704	Grid	748342.074	3855079.249	280.81	1749	Grid	747812.9639	3854852.49	363.02
1660	Grid	748667.3461	3853819.923	423.07	1705	Grid	747957.5663	3856007.534	241.14	1750	Grid	747944.7251	3854775.747	365.51
1661	Grid	748839.9726	3855814.324	211.45	1706	Grid	747868.0865	3855870.213	232.06	1751	Grid	748076.4862	3854699.003	277.33
1662	Grid	748760.5029	3855753.624	201.98	1707	Grid	747907.4617	3855722.904	272.19	1752	Grid	747461.7795	3856072.306	288.87
1663	Grid	748750.8253	3855903.899	211.27	1708	Grid	747946.8369	3855575.594	304.84	1753	Grid	747372.2997	3855934.985	306.74
1664	Grid	748661.3455	3855766.578	207.46	1709	Grid	747986.2121	3855428.284	255.58	1754	Grid	747411.6749	3855787.675	295.92
1665	Grid	748766.6012	3855580.897	218.05	1710	Grid	748025.5873	3855280.974	237.2	1755	Grid	747451.0501	3855640.366	287.72

TABLE D-11: Receptors Locations and Elevations

Receptor		UTMs		ELEV (m)	Receptor		UTMs		ELEV (m)	Receptor		UTMs		ELEV (m)
#	Type	X (m)	Y (m)		#	Type	X (m)	Y (m)		#	Type	X (m)	Y (m)	
1756	Grid	747490.4252	3855493.056	302.26	1801	Grid	747758.6071	3854456.201	331.14	1846	Grid	747634.7629	3856293.106	197.99
1757	Grid	747529.8004	3855345.746	336.39	1802	Grid	747065.15	3856124.123	312.23	1847	Grid	747747.7889	3856601.806	188.15
1758	Grid	747569.1756	3855198.436	299.11	1803	Grid	746975.6702	3855986.803	311.51	1848	Grid	747597.3783	3856501.651	194.28
1759	Grid	747608.5508	3855051.126	308.62	1804	Grid	747015.0454	3855839.493	322.69	1849	Grid	747552.1787	3856358.536	204.55
1760	Grid	747647.926	3854903.816	292.84	1805	Grid	747054.4206	3855692.183	361.43	1850	Grid	747506.9791	3856215.421	224.82
1761	Grid	747733.4941	3854791.79	317.53	1806	Grid	747093.7958	3855544.873	333.18	1851	Grid	747659.1781	3856648.153	187.9
1762	Grid	747865.2553	3854715.046	335.64	1807	Grid	747133.1709	3855397.563	336.62	1852	Grid	747507.2609	3856543.228	195.85
1763	Grid	747997.0165	3854638.302	316.5	1808	Grid	747172.5461	3855250.254	341.93	1853	Grid	747459.0479	3856390.572	211.18
1764	Grid	747362.6221	3856085.26	258.67	1809	Grid	747211.9213	3855102.944	360.85	1854	Grid	747410.835	3856237.916	233.63
1765	Grid	747273.1423	3855947.94	300.25	1810	Grid	747251.2965	3854955.634	376.88	1855	Grid	747570.5673	3856694.501	187.98
1766	Grid	747312.5175	3855800.63	323.42	1811	Grid	747290.6717	3854808.324	376.19	1856	Grid	747420.3451	3856594.943	198.05
1767	Grid	747351.8927	3855653.32	300.86	1812	Grid	747330.0469	3854661.014	343.73	1857	Grid	747375.5221	3856453.021	213.75
1768	Grid	747391.2679	3855506.01	329.21	1813	Grid	747415.615	3854548.988	315.05	1858	Grid	747330.6992	3856311.098	247.36
1769	Grid	747430.6431	3855358.7	345.8	1814	Grid	747547.3762	3854472.244	317.82	1859	Grid	747481.9565	3856740.849	189.11
1770	Grid	747470.0182	3855211.39	298.61	1815	Grid	747679.1374	3854395.5	319.39	1860	Grid	747330.4159	3856637.117	199.91
1771	Grid	747509.3934	3855064.081	322.61	1816	Grid	746965.9926	3856137.078	302.27	1861	Grid	747282.9563	3856486.846	224.22
1772	Grid	747548.7686	3854916.771	302.63	1817	Grid	748860.5292	3855924.338	229.47	1862	Grid	747235.4968	3856336.575	275.86
1773	Grid	747654.0244	3854731.089	340.31	1818	Grid	748938.9292	3856074.228	235.85	1863	Grid	747393.3457	3856787.197	189.52
1774	Grid	747785.7855	3854654.345	340.63	1819	Grid	748811.1184	3856045.631	231.18	1864	Grid	747240.4868	3856679.29	204.42
1775	Grid	747917.5467	3854577.602	316.55	1820	Grid	748683.3076	3856017.034	206.87	1865	Grid	747190.3906	3856520.671	265.2
1776	Grid	747263.4647	3856098.215	277.73	1821	Grid	748761.7076	3856166.924	232.33	1866	Grid	747140.2943	3856362.052	255.71
1777	Grid	747173.985	3855960.894	338.73	1822	Grid	748594.6968	3856063.382	199.16	1867	Grid	747304.7349	3856833.545	189.93
1778	Grid	747213.3601	3855813.584	351.79	1823	Grid	748488.5084	3856054.074	204.35	1868	Grid	747153.4873	3856730.74	213.11
1779	Grid	747252.7353	3855666.274	322.72	1824	Grid	748545.286	3856184.674	206.03	1869	Grid	747106.6136	3856582.325	246.62
1780	Grid	747292.1105	3855518.965	363.85	1825	Grid	748396.3821	3856089.29	203.3	1870	Grid	747059.74	3856433.909	281.75
1781	Grid	747331.4857	3855371.655	362.18	1826	Grid	748456.6752	3856231.022	207.5	1871	Grid	747012.8663	3856285.493	317.46
1782	Grid	747370.8609	3855224.345	318.5	1827	Grid	748304.2558	3856124.507	202.17	1872	Grid	747216.1242	3856879.893	191.34
1783	Grid	747410.2361	3855077.035	354.68	1828	Grid	748368.0645	3856277.37	204.89	1873	Grid	748126.8324	3856096.437	208.96
1784	Grid	747449.6112	3854929.725	338.17	1829	Grid	748219.1605	3856181.986	201.18	1874	Grid	747626.1059	3856168.875	211.62
1785	Grid	747488.9864	3854782.415	344.73	1830	Grid	748279.4537	3856323.718	196.83	1875	Grid	748947.8993	3855980.946	231.27
1786	Grid	747574.5546	3854670.389	334.06	1831	Grid	748127.9131	3856219.986	201.49	1876	Grid	748949.791	3855880.964	222.07
1787	Grid	747706.3157	3854593.645	349.86	1832	Grid	748190.8429	3856370.066	195.12	1877	Grid	749033.6066	3855782.532	203.65
1788	Grid	747838.0769	3854516.901	334.08	1833	Grid	748041.9389	3856274.682	197.85	1878	Grid	748707.8023	3855676.349	211.46
1789	Grid	747164.3074	3856111.169	316.79	1834	Grid	747999.7526	3856141.108	207.29	1879	Grid	748514.5544	3856372.002	231.18
1790	Grid	747074.8276	3855973.848	324.82	1835	Grid	748102.2321	3856416.414	192.95	1880	Grid	748513.6194	3856471.119	220.94
1791	Grid	747114.2028	3855826.539	334.93	1836	Grid	747951.2188	3856314.351	196.2	1881	Grid	748414.5589	3856371.058	220.07
1792	Grid	747153.5779	3855679.229	363.44	1837	Grid	747904.8139	3856167.42	209.29	1882	Grid	748413.6239	3856470.176	210.98
1793	Grid	747192.9531	3855531.919	352.16	1838	Grid	748013.6213	3856462.762	192	1883	Grid	748313.6283	3856469.233	211.56
1794	Grid	747232.3283	3855384.609	352.84	1839	Grid	747860.4987	3856354.02	194.31	1884	Grid	748213.6328	3856468.289	207.7
1795	Grid	747271.7035	3855237.299	352.34	1840	Grid	747809.8751	3856193.731	207.65	1885	Grid	747716.46	3856166.22	230.13
1796	Grid	747311.0787	3855089.989	369.08	1841	Grid	747925.0105	3856509.11	191.04	1886	Grid	748456.3543	3855245.579	277.41
1797	Grid	747350.4539	3854942.68	354.12	1842	Grid	747774.3488	3856408.16	192.47	1887	Grid	747913.9571	3855062.864	288.77
1798	Grid	747389.829	3854795.37	342.45	1843	Grid	747728.647	3856263.455	201.42	1888	Grid	748197.3391	3854851.705	284.04
1799	Grid	747495.0848	3854609.688	320.15	1844	Grid	747836.3997	3856555.458	189.53	1889	Grid	747115.5517	3856259.678	315.28
1800	Grid	747626.846	3854532.944	339.33	1845	Grid	747683.9802	3856448.942	194.11	1890	Grid	748118.0004	3854783.805	272.12

TABLE D-11: Receptors Locations and Elevations

Receptor		UTMs		ELEV (m)	Receptor		UTMs		ELEV (m)	Receptor		UTMs		ELEV (m)
#	Type	X (m)	Y (m)		#	Type	X (m)	Y (m)		#	Type	X (m)	Y (m)	
1891	Grid	747012.7512	3856556.087	287.34	1936	Grid	748232.0847	3856064.658	208.51	1981	Grid	746884.1885	3855184.603	343.13
1892	Grid	746915.5606	3856257.792	298.19	1937	Grid	747829.0379	3856705.279	196.55	1982	Grid	746130.7368	3856599.371	248.91
1893	Grid	746914.6256	3856356.909	315.95	1938	Grid	747752.2127	3856509.141	190.11	1983	Grid	746061.1726	3856457.142	243.14
1894	Grid	746913.6906	3856456.027	289.17	1939	Grid	747267.7328	3856233.064	277.87	1984	Grid	746119.2185	3856323.998	248.46
1895	Grid	746912.7556	3856555.144	248.62	1940	Grid	747029.1809	3856690.153	256.2	1985	Grid	746177.2643	3856190.853	255.93
1896	Grid	746855.4499	3856066.75	291.47	1941	Grid	746929.1988	3856688.262	227.93	1986	Grid	746235.3102	3856057.708	264
1897	Grid	746933.3495	3855884.789	314.26	1942	Grid	746829.2166	3856686.371	252.62	1987	Grid	746293.3561	3855924.564	282.16
1898	Grid	746816.5001	3856157.731	278.94	1943	Grid	746729.2345	3856684.48	242.71	1988	Grid	746351.4019	3855791.419	305.54
1899	Grid	746815.5651	3856256.848	268.32	1944	Grid	746629.2524	3856682.59	239.46	1989	Grid	746409.4478	3855658.274	337.22
1900	Grid	746814.6301	3856355.966	276.81	1945	Grid	746530.6653	3856606.934	273.11	1990	Grid	746467.4937	3855525.129	338.76
1901	Grid	746813.6951	3856455.083	265.35	1946	Grid	746460.7192	3856465.582	300.52	1991	Grid	746525.5395	3855391.985	338.41
1902	Grid	746812.7601	3856554.201	271.02	1947	Grid	746518.0013	3856334.189	306.24	1992	Grid	746583.5854	3855258.84	344.67
1903	Grid	746754.8773	3856067.155	314.11	1948	Grid	746430.6832	3856605.043	289.42	1993	Grid	746680.1783	3855165.65	365.31
1904	Grid	746793.2501	3855977.522	324.4	1949	Grid	746360.8494	3856463.433	271.07	1994	Grid	746815.3183	3855112.414	367.43
1905	Grid	746831.6228	3855887.89	329.19	1950	Grid	746418.3561	3856331.525	307.41	1995	Grid	746950.4583	3855059.179	363.63
1906	Grid	746869.9956	3855798.257	336.44	1951	Grid	746475.8629	3856199.617	306.3	1996	Grid	746030.7547	3856597.48	236.61
1907	Grid	746908.3684	3855708.624	325.58	1952	Grid	746533.3696	3856067.709	303.95	1997	Grid	745961.2632	3856455.085	277.57
1908	Grid	746946.7411	3855618.992	323.24	1953	Grid	746590.8764	3855935.801	293.41	1998	Grid	746019.4546	3856321.606	269.12
1909	Grid	746985.1139	3855529.359	321.55	1954	Grid	746648.3831	3855803.893	290.74	1999	Grid	746077.6459	3856188.128	280.3
1910	Grid	747023.4867	3855439.727	323.98	1955	Grid	746705.8899	3855671.985	301.05	2000	Grid	746135.8373	3856054.65	284.17
1911	Grid	746716.5045	3856156.788	304.01	1956	Grid	746763.3966	3855540.077	316.49	2001	Grid	746194.0286	3855921.171	273.82
1912	Grid	746715.5695	3856255.905	277.91	1957	Grid	747088.673	3855302.687	337.82	2002	Grid	746252.2199	3855787.693	295.07
1913	Grid	746714.6345	3856355.023	268.01	1958	Grid	746330.701	3856603.152	295.64	2003	Grid	746310.4113	3855654.214	315.55
1914	Grid	746713.6995	3856454.14	252.6	1959	Grid	746260.9671	3856461.313	260.26	2004	Grid	746368.6026	3855520.736	315.08
1915	Grid	746712.7645	3856553.258	243.47	1960	Grid	746318.6735	3856328.947	295.19	2005	Grid	746426.794	3855387.258	319.61
1916	Grid	746654.3768	3856067.391	329.05	1961	Grid	746376.38	3856196.581	299.69	2006	Grid	746484.9853	3855253.779	338.75
1917	Grid	746692.2447	3855978.938	323.81	1962	Grid	746434.0864	3856064.215	298.11	2007	Grid	746610.916	3855093.616	353.96
1918	Grid	746730.1126	3855890.485	321.3	1963	Grid	746491.7928	3855931.849	282.9	2008	Grid	746746.3947	3855040.247	361.42
1919	Grid	746767.9804	3855802.031	312.42	1964	Grid	746549.4992	3855799.483	283.51	2009	Grid	746881.8734	3854986.878	378.89
1920	Grid	746805.8483	3855713.578	307.34	1965	Grid	746607.2056	3855667.117	312.67	2010	Grid	747017.3521	3854933.51	361.15
1921	Grid	746843.7162	3855625.125	308	1966	Grid	746664.9121	3855534.751	326.45	2011	Grid	745930.7725	3856595.589	243.48
1922	Grid	746881.584	3855536.672	313	1967	Grid	746722.6185	3855402.385	354.07	2012	Grid	747930.162	3856607.177	193.5
1923	Grid	746919.4519	3855448.218	316.5	1968	Grid	746818.6465	3855309.74	336.53	2013	Grid	747692.588	3856796.209	191.05
1924	Grid	746957.3198	3855359.765	328.15	1969	Grid	747759.0944	3854939.27	324.44	2014	Grid	747690.9809	3856888.529	195.32
1925	Grid	746995.1876	3855271.312	348.31	1970	Grid	746230.7189	3856601.261	273.75	2015	Grid	747689.3737	3856980.849	203.53
1926	Grid	747033.0555	3855182.859	362.72	1971	Grid	746161.0743	3856459.218	250.3	2016	Grid	747687.7666	3857073.169	214.78
1927	Grid	747070.9234	3855094.405	376.5	1972	Grid	746218.9594	3856326.442	262.67	2017	Grid	747686.1594	3857165.489	227.59
1928	Grid	747108.7912	3855005.952	384.34	1973	Grid	746276.8445	3856193.666	266.95	2018	Grid	747684.5523	3857257.809	221.2
1929	Grid	747146.6591	3854917.499	389.23	1974	Grid	746334.7296	3856060.89	268.15	2019	Grid	747682.9451	3857350.129	218.03
1930	Grid	747184.5269	3854829.045	366.07	1975	Grid	746392.6146	3855928.114	272.91	2020	Grid	747592.6032	3856794.469	185.59
1931	Grid	746616.509	3856155.844	323.46	1976	Grid	746450.4997	3855795.338	295.6	2021	Grid	747590.996	3856886.789	187.3
1932	Grid	746615.574	3856254.962	306.67	1977	Grid	746508.3848	3855662.562	308.74	2022	Grid	747589.3889	3856979.109	192.39
1933	Grid	746614.639	3856354.079	291.71	1978	Grid	746566.2699	3855529.786	347.38	2023	Grid	747587.7817	3857071.429	200.67
1934	Grid	746613.704	3856453.197	281.81	1979	Grid	746624.1549	3855397.011	352.57	2024	Grid	747586.1746	3857163.749	202.08
1935	Grid	746612.769	3856552.314	277.03	1980	Grid	746749.4228	3855237.691	350.26	2025	Grid	747584.5674	3857256.069	212.58

TABLE D-11: Receptors Locations and Elevations

Receptor		UTMs		ELEV (m)	Receptor		UTMs		ELEV (m)	Receptor		UTMs		ELEV (m)
#	Type	X (m)	Y (m)		#	Type	X (m)	Y (m)		#	Type	X (m)	Y (m)	
2026	Grid	747582.9603	3857348.389	239.22	2071	Grid	746789.5101	3856965.184	217.26	2116	Grid	746184.7795	3857231.701	260.76
2027	Grid	747491.0112	3856885.048	184.76	2072	Grid	746787.9029	3857057.504	222.83	2117	Grid	746183.1724	3857324.021	223.65
2028	Grid	747489.404	3856977.368	184.04	2073	Grid	746786.2958	3857149.824	214.39	2118	Grid	746092.8304	3856768.36	242.44
2029	Grid	747487.7969	3857069.688	190.07	2074	Grid	746784.6886	3857242.144	190.8	2119	Grid	746091.2233	3856860.68	256.8
2030	Grid	747486.1897	3857162.008	199.78	2075	Grid	746783.0815	3857334.464	181.3	2120	Grid	746089.6161	3856953	248.21
2031	Grid	747484.5826	3857254.328	209.61	2076	Grid	746692.7395	3856778.804	239.64	2121	Grid	746088.009	3857045.32	247.24
2032	Grid	747482.9754	3857346.648	211.76	2077	Grid	746691.1324	3856871.124	258.62	2122	Grid	746086.4018	3857137.64	269.35
2033	Grid	747391.0263	3856883.308	186.48	2078	Grid	746689.5252	3856963.444	243.74	2123	Grid	746084.7947	3857229.96	270.29
2034	Grid	747389.4192	3856975.628	183.56	2079	Grid	746687.9181	3857055.764	251.31	2124	Grid	746083.1875	3857322.28	260.87
2035	Grid	747387.812	3857067.948	185.66	2080	Grid	746686.3109	3857148.084	225.77	2125	Grid	745992.8455	3856766.62	232.5
2036	Grid	747386.2049	3857160.268	191.39	2081	Grid	746684.7038	3857240.404	227.31	2126	Grid	745991.2384	3856858.94	246.05
2037	Grid	747384.5977	3857252.588	193.4	2082	Grid	746683.0966	3857332.724	204.97	2127	Grid	745989.6313	3856951.26	230.99
2038	Grid	747382.9906	3857344.908	194.97	2083	Grid	746592.7546	3856777.063	230.72	2128	Grid	745988.0241	3857043.58	234.94
2039	Grid	747289.4343	3856973.887	185.28	2084	Grid	746591.1475	3856869.383	224.03	2129	Grid	745986.417	3857135.9	253.16
2040	Grid	747287.8272	3857066.207	182.2	2085	Grid	746589.5404	3856961.703	235.68	2130	Grid	745984.8098	3857228.22	237.62
2041	Grid	747286.22	3857158.527	184.94	2086	Grid	746587.9332	3857054.023	228.73	2131	Grid	745983.2027	3857320.54	258.28
2042	Grid	747284.6129	3857250.847	188.74	2087	Grid	746586.3261	3857146.343	239.13	2132	Grid	745892.8607	3856764.879	228.28
2043	Grid	747283.0057	3857343.167	191.34	2088	Grid	746584.7189	3857238.663	235.07	2133	Grid	745891.2535	3856857.199	225.14
2044	Grid	747189.4495	3856972.147	186.99	2089	Grid	746583.1118	3857330.983	231.83	2134	Grid	745889.6464	3856949.519	221.14
2045	Grid	747187.8423	3857064.467	182.38	2090	Grid	746492.7698	3856775.323	257.94	2135	Grid	745888.0393	3857041.839	224.25
2046	Grid	747186.2352	3857156.787	184.27	2091	Grid	746491.1627	3856867.643	236.29	2136	Grid	745886.4321	3857134.159	225.98
2047	Grid	747184.628	3857249.107	185.85	2092	Grid	746489.5555	3856959.963	218.26	2137	Grid	745884.825	3857226.479	219.71
2048	Grid	747183.0209	3857341.427	186.31	2093	Grid	746487.9484	3857052.283	216.14	2138	Grid	745883.2178	3857318.799	234.92
2049	Grid	747091.0718	3856878.086	199.43	2094	Grid	746486.3412	3857144.603	208.66	2139	Grid	745830.1308	3856588.487	238.76
2050	Grid	747089.4646	3856970.406	189.41	2095	Grid	746484.7341	3857236.923	205.26	2140	Grid	746044.0179	3856094.497	300.85
2051	Grid	747087.8575	3857062.726	181.96	2096	Grid	746483.1269	3857329.243	206.89	2141	Grid	746222.2572	3855682.839	294.04
2052	Grid	747086.2503	3857155.046	183.46	2097	Grid	746392.7849	3856773.582	235.52	2142	Grid	746329.2008	3855435.844	326.9
2053	Grid	747084.6432	3857247.366	183.01	2098	Grid	746391.1778	3856865.902	230.89	2143	Grid	745792.8758	3856763.138	233.07
2054	Grid	747083.036	3857339.686	181.98	2099	Grid	746389.5707	3856958.222	228.16	2144	Grid	745791.2687	3856855.458	227.24
2055	Grid	746992.6941	3856784.025	233.11	2100	Grid	746387.9635	3857050.542	218.35	2145	Grid	745789.6616	3856947.778	219.1
2056	Grid	746991.0869	3856876.345	206.81	2101	Grid	746386.3564	3857142.862	212.92	2146	Grid	745788.0544	3857040.098	217
2057	Grid	746989.4798	3856968.665	194.15	2102	Grid	746384.7492	3857235.182	205.66	2147	Grid	745786.4473	3857132.418	216.42
2058	Grid	746987.8726	3857060.985	185.13	2103	Grid	746383.1421	3857327.502	203.31	2148	Grid	745784.8401	3857224.738	212.99
2059	Grid	746986.2655	3857153.305	183.03	2104	Grid	746292.8001	3856771.841	265.6	2149	Grid	745783.233	3857317.058	211.24
2060	Grid	746984.6583	3857245.625	180.12	2105	Grid	746291.193	3856864.161	265.15	2150	Grid	747781.5497	3857251.88	254.8
2061	Grid	746983.0512	3857337.945	178.64	2106	Grid	746289.5858	3856956.481	244	2151	Grid	747780.1694	3857151.889	234.16
2062	Grid	746892.7092	3856782.285	222.58	2107	Grid	746287.9787	3857048.801	228.94	2152	Grid	747778.7891	3857051.899	213.75
2063	Grid	746891.1021	3856874.605	217.07	2108	Grid	746286.3715	3857141.121	232.35	2153	Grid	747777.4089	3856951.908	203.82
2064	Grid	746889.4949	3856966.925	223.08	2109	Grid	746284.7644	3857233.441	234.25	2154	Grid	747776.0286	3856851.918	199.92
2065	Grid	746887.8878	3857059.245	185.46	2110	Grid	746283.1572	3857325.761	226.09	2155	Grid	747257.0336	3857455.862	193.58
2066	Grid	746886.2806	3857151.565	182.59	2111	Grid	746192.8152	3856770.101	252.93	2156	Grid	747255.6373	3857555.397	203.06
2067	Grid	746884.6735	3857243.885	176.89	2112	Grid	746191.2081	3856862.421	268.26	2157	Grid	747254.2411	3857654.932	203.59
2068	Grid	746883.0663	3857336.205	174.68	2113	Grid	746189.601	3856954.741	272.91	2158	Grid	747252.8448	3857754.467	222.7
2069	Grid	746792.7243	3856780.544	256.93	2114	Grid	746187.9938	3857047.061	270.57	2159	Grid	747251.4486	3857854.002	231.83
2070	Grid	746791.1172	3856872.864	246.54	2115	Grid	746186.3867	3857139.381	268.03	2160	Grid	747250.0523	3857953.537	212.2

TABLE D-11: Receptors Locations and Elevations

Receptor		UTMs		ELEV (m)	Receptor		UTMs		ELEV (m)	Receptor		UTMs		ELEV (m)
#	Type	X (m)	Y (m)		#	Type	X (m)	Y (m)		#	Type	X (m)	Y (m)	
2161	Grid	747248.6561	3858053.072	201.27	2206	Grid	746952.8743	3857750.259	183.48	2251	Grid	746657.0926	3857447.447	195.67
2162	Grid	747247.2598	3858152.607	216.97	2207	Grid	746951.4781	3857849.794	189.5	2252	Grid	746655.6964	3857546.982	185.02
2163	Grid	747245.8636	3858252.142	226.01	2208	Grid	746950.0818	3857949.329	183.91	2253	Grid	746654.3001	3857646.517	178.82
2164	Grid	747244.4673	3858351.677	208.56	2209	Grid	746948.6856	3858048.864	205.98	2254	Grid	746652.9039	3857746.052	177.04
2165	Grid	747243.0711	3858451.212	228.94	2210	Grid	746947.2893	3858148.399	202.94	2255	Grid	746651.5076	3857845.587	175.41
2166	Grid	747241.6748	3858550.747	247	2211	Grid	746945.8931	3858247.934	182.59	2256	Grid	746650.1114	3857945.122	172.7
2167	Grid	747240.2786	3858650.282	250.26	2212	Grid	746944.4968	3858347.469	194.16	2257	Grid	746648.7151	3858044.657	170.89
2168	Grid	747238.8823	3858749.817	240.69	2213	Grid	746943.1006	3858447.004	195.48	2258	Grid	746647.3189	3858144.192	166.15
2169	Grid	747237.4861	3858849.352	253.52	2214	Grid	746941.7043	3858546.539	205.01	2259	Grid	746645.9226	3858243.727	164.58
2170	Grid	747236.0898	3858948.887	243.28	2215	Grid	746940.3081	3858646.074	196.28	2260	Grid	746644.5264	3858343.262	165.01
2171	Grid	747157.0434	3857454.46	188.29	2216	Grid	746938.9118	3858745.609	208.09	2261	Grid	746643.1301	3858442.797	166.66
2172	Grid	747155.6472	3857553.995	191.95	2217	Grid	746937.5156	3858845.144	233.09	2262	Grid	746641.7339	3858542.332	170.97
2173	Grid	747154.2509	3857653.53	206.17	2218	Grid	746936.1193	3858944.679	218.32	2263	Grid	746640.3376	3858641.867	181.68
2174	Grid	747152.8547	3857753.065	210.72	2219	Grid	746857.0729	3857450.252	174.44	2264	Grid	746638.9414	3858741.402	171.53
2175	Grid	747151.4584	3857852.6	221.2	2220	Grid	746855.6767	3857549.787	175.4	2265	Grid	746637.5451	3858840.937	186.93
2176	Grid	747150.0622	3857952.135	201.13	2221	Grid	746854.2804	3857649.322	174.77	2266	Grid	746636.1489	3858940.472	192.97
2177	Grid	747148.6659	3858051.67	200.86	2222	Grid	746852.8842	3857748.857	174.13	2267	Grid	746557.1024	3857446.044	228.46
2178	Grid	747147.2697	3858151.205	220.44	2223	Grid	746851.4879	3857848.392	176.91	2268	Grid	746555.7062	3857545.579	212.9
2179	Grid	747145.8734	3858250.74	213.18	2224	Grid	746850.0917	3857947.927	180.92	2269	Grid	746554.3099	3857645.114	187.17
2180	Grid	747144.4772	3858350.275	198.43	2225	Grid	746848.6954	3858047.462	186.09	2270	Grid	746552.9137	3857744.649	182.59
2181	Grid	747143.0809	3858449.81	211.6	2226	Grid	746847.2992	3858146.997	178.43	2271	Grid	746551.5174	3857844.184	179.64
2182	Grid	747141.6847	3858549.345	217.67	2227	Grid	746845.9029	3858246.532	175.36	2272	Grid	746550.1212	3857943.719	178.01
2183	Grid	747140.2884	3858648.88	243.32	2228	Grid	746844.5067	3858346.067	186.55	2273	Grid	746548.7249	3858043.254	174.8
2184	Grid	747138.8922	3858748.415	218.83	2229	Grid	746843.1104	3858445.602	182.57	2274	Grid	746547.3287	3858142.789	171.84
2185	Grid	747137.4959	3858847.95	231.38	2230	Grid	746841.7142	3858545.137	184.04	2275	Grid	746545.9324	3858242.324	168.52
2186	Grid	747136.0997	3858947.485	254.88	2231	Grid	746840.3179	3858644.672	208.82	2276	Grid	746544.5362	3858341.859	164.99
2187	Grid	747057.0533	3857453.057	183.54	2232	Grid	746838.9217	3858744.207	206.15	2277	Grid	746543.1399	3858441.394	162.31
2188	Grid	747055.657	3857552.592	182.54	2233	Grid	746837.5254	3858843.742	207.11	2278	Grid	746541.7437	3858540.929	163.93
2189	Grid	747054.2608	3857652.127	191.02	2234	Grid	746836.1292	3858943.277	227.11	2279	Grid	746540.3474	3858640.464	166.6
2190	Grid	747052.8645	3857751.662	195.48	2235	Grid	746757.0828	3857448.849	176.56	2280	Grid	746538.9512	3858739.999	167.05
2191	Grid	747051.4683	3857851.197	206.62	2236	Grid	746755.6865	3857548.384	172.5	2281	Grid	746537.5549	3858839.534	168.59
2192	Grid	747050.072	3857950.732	189.34	2237	Grid	746754.2903	3857647.919	171.16	2282	Grid	746536.1587	3858939.069	167.6
2193	Grid	747048.6758	3858050.267	201.03	2238	Grid	746752.894	3857747.454	171.86	2283	Grid	746457.1123	3857444.641	194.04
2194	Grid	747047.2795	3858149.802	220.65	2239	Grid	746751.4978	3857846.989	171.11	2284	Grid	746455.716	3857544.176	193.38
2195	Grid	747045.8833	3858249.337	197.12	2240	Grid	746750.1015	3857946.524	170.44	2285	Grid	746454.3198	3857643.711	191.68
2196	Grid	747044.487	3858348.872	192.88	2241	Grid	746748.7053	3858046.059	171.37	2286	Grid	746452.9235	3857743.246	204.12
2197	Grid	747043.0908	3858448.407	212.32	2242	Grid	746747.309	3858145.594	168.69	2287	Grid	746451.5273	3857842.781	200.42
2198	Grid	747041.6945	3858547.942	219.52	2243	Grid	746745.9128	3858245.129	168.3	2288	Grid	746450.131	3857942.316	183.27
2199	Grid	747040.2983	3858647.477	231.76	2244	Grid	746744.5165	3858344.664	169.33	2289	Grid	746448.7348	3858041.851	181.19
2200	Grid	747038.902	3858747.012	206.25	2245	Grid	746743.1203	3858444.199	170.18	2290	Grid	746447.3385	3858141.386	176.06
2201	Grid	747037.5058	3858846.547	240.63	2246	Grid	746741.724	3858543.734	192.84	2291	Grid	746445.9423	3858240.921	171.48
2202	Grid	747036.1095	3858946.082	234.77	2247	Grid	746740.3278	3858643.269	201.59	2292	Grid	746444.546	3858340.456	167.37
2203	Grid	746957.0631	3857451.654	178.55	2248	Grid	746738.9315	3858742.804	187.11	2293	Grid	746443.1498	3858439.991	164.35
2204	Grid	746955.6668	3857551.189	178.73	2249	Grid	746737.5353	3858842.339	186.26	2294	Grid	746441.7535	3858539.526	161.83
2205	Grid	746954.2706	3857650.724	180.63	2250	Grid	746736.139	3858941.874	207.4	2295	Grid	746440.3573	3858639.061	161.09

TABLE D-11: Receptors Locations and Elevations

Receptor		UTMs		ELEV (m)	Receptor		UTMs		ELEV (m)	Receptor		UTMs		ELEV (m)
#	Type	X (m)	Y (m)		#	Type	X (m)	Y (m)		#	Type	X (m)	Y (m)	
2296	Grid	746438.961	3858738.596	162.12	2341	Grid	746143.1793	3858435.783	199.27	2386	Grid	745847.3976	3858132.97	215.54
2297	Grid	746437.5648	3858838.131	162.68	2342	Grid	746141.783	3858535.318	171.65	2387	Grid	745846.0013	3858232.505	208.01
2298	Grid	746436.1685	3858937.666	161.57	2343	Grid	746140.3868	3858634.853	168.11	2388	Grid	745844.6051	3858332.04	218.43
2299	Grid	746357.1221	3857443.239	206.35	2344	Grid	746138.9905	3858734.388	180.07	2389	Grid	745843.2088	3858431.575	203.82
2300	Grid	746355.7259	3857542.774	194.01	2345	Grid	746137.5943	3858833.923	192.44	2390	Grid	745841.8126	3858531.11	190.39
2301	Grid	746354.3296	3857642.309	198.53	2346	Grid	746136.198	3858933.458	198.72	2391	Grid	745840.4163	3858630.645	179.63
2302	Grid	746352.9334	3857741.844	213.55	2347	Grid	746057.1516	3857439.031	258.44	2392	Grid	745839.0201	3858730.18	169
2303	Grid	746351.5371	3857841.379	215.51	2348	Grid	746055.7554	3857538.566	243.77	2393	Grid	745837.6238	3858829.715	180
2304	Grid	746350.1409	3857940.914	206.78	2349	Grid	746054.3591	3857638.101	233.49	2394	Grid	745836.2276	3858929.25	187.36
2305	Grid	746348.7446	3858040.449	197.88	2350	Grid	746052.9629	3857737.636	241	2395	Grid	745757.1811	3857434.823	205.2
2306	Grid	746347.3484	3858139.984	180.04	2351	Grid	746051.5666	3857837.171	208.43	2396	Grid	745755.7849	3857534.358	203.88
2307	Grid	746345.9521	3858239.519	177.04	2352	Grid	746050.1704	3857936.706	193.67	2397	Grid	745754.3886	3857633.893	199.2
2308	Grid	746344.5559	3858339.054	174.45	2353	Grid	746048.7741	3858036.241	182.9	2398	Grid	745752.9924	3857733.428	198.58
2309	Grid	746343.1596	3858438.589	169.48	2354	Grid	746047.3779	3858135.776	193.71	2399	Grid	745751.5961	3857832.963	205.28
2310	Grid	746341.7634	3858538.124	165.21	2355	Grid	746045.9816	3858235.311	192.85	2400	Grid	745750.1999	3857932.498	210.97
2311	Grid	746340.3671	3858637.659	161.94	2356	Grid	746044.5854	3858334.846	204.08	2401	Grid	745748.8036	3858032.033	218.48
2312	Grid	746338.9709	3858737.194	159.69	2357	Grid	746043.1891	3858434.381	208.75	2402	Grid	745747.4074	3858131.568	221.57
2313	Grid	746337.5746	3858836.729	158.13	2358	Grid	746041.7929	3858533.916	183	2403	Grid	745746.0111	3858231.103	217.99
2314	Grid	746336.1784	3858936.264	158.14	2359	Grid	746040.3966	3858633.451	168.23	2404	Grid	745744.6149	3858330.638	215.56
2315	Grid	746257.132	3857441.836	211.04	2360	Grid	746039.0004	3858732.986	172.68	2405	Grid	745743.2186	3858430.173	211.41
2316	Grid	746255.7357	3857541.371	202.98	2361	Grid	746037.6041	3858832.521	183.54	2406	Grid	745741.8224	3858529.708	207.1
2317	Grid	746254.3395	3857640.906	213.51	2362	Grid	746036.2079	3858932.056	207.05	2407	Grid	745740.4261	3858629.243	184.51
2318	Grid	746252.9432	3857740.441	217.85	2363	Grid	745957.1615	3857437.628	249.57	2408	Grid	745739.0299	3858728.778	170.1
2319	Grid	746251.547	3857839.976	228.99	2364	Grid	745955.7652	3857537.163	244.71	2409	Grid	745737.6336	3858828.313	177.94
2320	Grid	746250.1507	3857939.511	208.07	2365	Grid	745954.369	3857636.698	215.97	2410	Grid	745736.2374	3858927.848	184.59
2321	Grid	746248.7545	3858039.046	199.11	2366	Grid	745952.9727	3857736.233	215.07	2411	Grid	745658.5872	3857333.885	221.9
2322	Grid	746247.3582	3858138.581	180.07	2367	Grid	745951.5765	3857835.768	193.91	2412	Grid	745657.191	3857433.42	215.16
2323	Grid	746245.962	3858238.116	181.06	2368	Grid	745950.1802	3857935.303	190.05	2413	Grid	745655.7947	3857532.955	212.13
2324	Grid	746244.5657	3858337.651	195.51	2369	Grid	745948.784	3858034.838	196.91	2414	Grid	745654.3985	3857632.49	204.98
2325	Grid	746243.1695	3858437.186	178.4	2370	Grid	745947.3877	3858134.373	196.4	2415	Grid	745653.0022	3857732.025	213.43
2326	Grid	746241.7732	3858536.721	169.56	2371	Grid	745945.9915	3858233.908	212.1	2416	Grid	745651.606	3857831.56	221.22
2327	Grid	746240.377	3858636.256	166.29	2372	Grid	745944.5952	3858333.443	211.9	2417	Grid	745650.2097	3857931.095	221.52
2328	Grid	746238.9807	3858735.791	171.28	2373	Grid	745943.199	3858432.978	208.82	2418	Grid	745648.8135	3858030.63	219.65
2329	Grid	746237.5845	3858835.326	168.22	2374	Grid	745941.8027	3858532.513	190.58	2419	Grid	745647.4172	3858130.165	222.95
2330	Grid	746236.1882	3858934.861	166.89	2375	Grid	745940.4065	3858632.048	173.14	2420	Grid	745646.021	3858229.7	209.9
2331	Grid	746157.1418	3857440.433	229.48	2376	Grid	745939.0102	3858731.583	169	2421	Grid	745644.6247	3858329.235	206.64
2332	Grid	746155.7455	3857539.968	217.92	2377	Grid	745937.614	3858831.118	182.95	2422	Grid	745643.2285	3858428.77	209.97
2333	Grid	746154.3493	3857639.503	238.96	2378	Grid	745936.2177	3858930.653	193.31	2423	Grid	745641.8322	3858528.305	207.65
2334	Grid	746152.953	3857739.038	244.79	2379	Grid	745857.1713	3857436.225	220.28	2424	Grid	745640.436	3858627.84	193.52
2335	Grid	746151.5568	3857838.573	230.27	2380	Grid	745855.7751	3857535.76	218.19	2425	Grid	745639.0397	3858727.375	172.82
2336	Grid	746150.1605	3857938.108	213.01	2381	Grid	745854.3788	3857635.295	204.86	2426	Grid	745637.6435	3858826.91	176.69
2337	Grid	746148.7643	3858037.643	182.2	2382	Grid	745852.9826	3857734.83	195.01	2427	Grid	745636.2472	3858926.445	181.85
2338	Grid	746147.368	3858137.178	180.55	2383	Grid	745851.5863	3857834.365	194.15	2428	Grid	745596.2523	3857243.362	227.43
2339	Grid	746145.9718	3858236.713	182.59	2384	Grid	745850.1901	3857933.9	199.31	2429	Grid	745633.9075	3857154.242	229.04
2340	Grid	746144.5755	3858336.248	193.32	2385	Grid	745848.7938	3858033.435	208.04	2430	Grid	745671.5627	3857065.121	218.13

TABLE D-11: Receptors Locations and Elevations

Receptor		UTMs		ELEV (m)	Receptor		UTMs		ELEV (m)	Receptor		UTMs		ELEV (m)
#	Type	X (m)	Y (m)		#	Type	X (m)	Y (m)		#	Type	X (m)	Y (m)	
2431	Grid	745558.5971	3857332.483	239.59	2476	Grid	745431.8352	3857156.387	251.95	2521	Grid	748482.528	3859065.801	210.2
2432	Grid	745557.2008	3857432.018	227.44	2477	Grid	745468.4445	3857069.743	250.41	2522	Grid	748578.178	3859067.094	220.68
2433	Grid	745555.8046	3857531.553	213.31	2478	Grid	745505.0537	3856983.098	231.46	2523	Grid	748673.828	3859068.388	232.2
2434	Grid	745554.4083	3857631.088	208.67	2479	Grid	745541.6629	3856896.453	237.14	2524	Grid	748769.478	3859069.681	223.92
2435	Grid	745553.0121	3857730.623	214.46	2480	Grid	745578.2722	3856809.808	254.79	2525	Grid	748865.128	3859070.974	225.4
2436	Grid	745551.6158	3857830.158	232.77	2481	Grid	745614.8814	3856723.163	265.43	2526	Grid	748960.778	3859072.268	197.25
2437	Grid	745550.2196	3857929.693	233.73	2482	Grid	745651.4906	3856636.518	254.21	2527	Grid	749056.428	3859073.561	192.63
2438	Grid	745548.8233	3858029.228	232.6	2483	Grid	745688.0999	3856549.873	252.73	2528	Grid	749152.078	3859074.854	205.85
2439	Grid	745547.4271	3858128.763	230.15	2484	Grid	745724.7091	3856463.228	250.36	2529	Grid	749247.728	3859076.148	229.33
2440	Grid	745546.0308	3858228.298	216.61	2485	Grid	745761.3183	3856376.583	250.54	2530	Grid	747263.0501	3859120.011	232.98
2441	Grid	745544.6346	3858327.833	200.54	2486	Grid	745797.9276	3856289.938	254.77	2531	Grid	747429.0259	3859151.565	204.48
2442	Grid	745543.2383	3858427.368	200.6	2487	Grid	745834.5368	3856203.293	255.38	2532	Grid	747524.6759	3859152.858	195.25
2443	Grid	745541.8421	3858526.903	193.99	2488	Grid	745871.146	3856116.648	259.49	2533	Grid	747620.3259	3859154.152	192.17
2444	Grid	745540.4458	3858626.438	182.91	2489	Grid	745907.7553	3856030.003	266.08	2534	Grid	747715.9759	3859155.445	182.1
2445	Grid	745539.0496	3858725.973	178.21	2490	Grid	746031.0176	3855906.769	311.91	2535	Grid	747811.6259	3859156.738	197.21
2446	Grid	745537.6533	3858825.508	180.8	2491	Grid	746117.6707	3855870.179	303.65	2536	Grid	747907.2759	3859158.032	214.61
2447	Grid	745536.2571	3858925.043	190.58	2492	Grid	745358.6167	3857329.677	224.65	2537	Grid	748002.9259	3859159.325	185.07
2448	Grid	745495.7043	3857243.28	252.63	2493	Grid	745357.2205	3857429.212	237.07	2538	Grid	748098.5759	3859160.618	184.7
2449	Grid	745532.8016	3857155.48	240.81	2494	Grid	745355.8242	3857528.747	233.53	2539	Grid	748194.2259	3859161.912	194.62
2450	Grid	745569.899	3857067.679	228.61	2495	Grid	745354.428	3857628.282	224.06	2540	Grid	748289.8759	3859163.205	210.88
2451	Grid	745606.9963	3856979.879	228.57	2496	Grid	745353.0317	3857727.817	239.84	2541	Grid	748385.5259	3859164.498	210.51
2452	Grid	745644.0937	3856892.079	244.33	2497	Grid	745351.6355	3857827.352	246.09	2542	Grid	748481.1759	3859165.792	220.57
2453	Grid	745681.1911	3856804.279	237.93	2498	Grid	745350.2392	3857926.887	246.88	2543	Grid	748576.8259	3859167.085	234.13
2454	Grid	745829.5805	3856453.078	244.76	2499	Grid	745348.843	3858026.422	237.54	2544	Grid	748672.4759	3859168.378	233.04
2455	Grid	745866.6779	3856365.278	260.18	2500	Grid	745347.4467	3858125.957	226.01	2545	Grid	748768.1259	3859169.672	210.77
2456	Grid	745903.7752	3856277.478	267.97	2501	Grid	745346.0505	3858225.492	211.93	2546	Grid	748863.7759	3859170.965	200.26
2457	Grid	745940.8726	3856189.677	273.31	2502	Grid	745344.6542	3858325.027	194.05	2547	Grid	748959.4259	3859172.258	192.46
2458	Grid	745458.6069	3857331.08	232.2	2503	Grid	745343.258	3858424.562	194.53	2548	Grid	749055.0759	3859173.552	192.5
2459	Grid	745457.2107	3857430.615	217.3	2504	Grid	745341.8617	3858524.097	198.19	2549	Grid	749150.7259	3859174.845	221.91
2460	Grid	745455.8144	3857530.15	217.53	2505	Grid	745340.4655	3858623.632	200.16	2550	Grid	749246.3759	3859176.138	238.91
2461	Grid	745454.4182	3857629.685	215.62	2506	Grid	745339.0692	3858723.167	193.13	2551	Grid	747261.6981	3859220.002	230.58
2462	Grid	745453.0219	3857729.22	225.92	2507	Grid	745337.673	3858822.702	184.39	2552	Grid	747092.7341	3859088.347	205.45
2463	Grid	745451.6257	3857828.755	231.38	2508	Grid	745336.2767	3858922.237	185.23	2553	Grid	747427.6739	3859251.556	225.39
2464	Grid	745450.2294	3857928.29	244.4	2509	Grid	747334.728	3859050.281	211.16	2554	Grid	747523.3239	3859252.849	208.16
2465	Grid	745448.8332	3858027.825	242.18	2510	Grid	747430.378	3859051.574	212.11	2555	Grid	747618.9739	3859254.143	216.67
2466	Grid	745447.4369	3858127.36	228.5	2511	Grid	747526.028	3859052.868	210.98	2556	Grid	747714.6239	3859255.436	194.87
2467	Grid	745446.0407	3858226.895	214.55	2512	Grid	747621.678	3859054.161	213.99	2557	Grid	747810.2739	3859256.729	182.89
2468	Grid	745444.6444	3858326.43	198.2	2513	Grid	747717.328	3859055.454	193.55	2558	Grid	747905.9239	3859258.023	191.32
2469	Grid	745443.2482	3858425.965	187.23	2514	Grid	747812.978	3859056.748	213.18	2559	Grid	748001.5739	3859259.316	181
2470	Grid	745441.8519	3858525.5	184.54	2515	Grid	747908.628	3859058.041	220.78	2560	Grid	748097.2239	3859260.609	190.77
2471	Grid	745440.4557	3858625.035	185.23	2516	Grid	748004.278	3859059.334	194.06	2561	Grid	748192.8739	3859261.903	208.15
2472	Grid	745439.0594	3858724.57	184.29	2517	Grid	748099.928	3859060.628	211.88	2562	Grid	748288.5239	3859263.196	226.7
2473	Grid	745437.6632	3858824.105	181.07	2518	Grid	748195.578	3859061.921	193.09	2563	Grid	748384.1739	3859264.489	223.58
2474	Grid	745436.2669	3858923.64	193.66	2519	Grid	748291.228	3859063.214	194.6	2564	Grid	748479.8239	3859265.783	217.17
2475	Grid	745395.226	3857243.032	242.21	2520	Grid	748386.878	3859064.508	196.03	2565	Grid	748575.4739	3859267.076	228.74

TABLE D-11: Receptors Locations and Elevations

Receptor		UTMs		ELEV (m)	Receptor		UTMs		ELEV (m)	Receptor		UTMs		ELEV (m)
#	Type	X (m)	Y (m)		#	Type	X (m)	Y (m)		#	Type	X (m)	Y (m)	
2566	Grid	748671.1239	3859268.369	231.42	2611	Grid	748477.1199	3859465.764	229.04	2656	Grid	747996.1658	3859659.279	221.82
2567	Grid	748766.7739	3859269.663	218.66	2612	Grid	748572.7699	3859467.058	226.77	2657	Grid	748091.8158	3859660.573	222
2568	Grid	748862.4239	3859270.956	218.52	2613	Grid	748668.4199	3859468.351	226.75	2658	Grid	748187.4658	3859661.866	222
2569	Grid	748958.0739	3859272.249	188.68	2614	Grid	748764.0699	3859469.644	224.42	2659	Grid	748283.1158	3859663.159	222.97
2570	Grid	749053.7239	3859273.543	192.94	2615	Grid	748859.7199	3859470.938	216.27	2660	Grid	748378.7658	3859664.453	222.78
2571	Grid	749149.3739	3859274.836	224.99	2616	Grid	748955.3699	3859472.231	186.1	2661	Grid	748474.4158	3859665.746	217.69
2572	Grid	749245.0239	3859276.129	235.9	2617	Grid	749051.0199	3859473.524	192.33	2662	Grid	748570.0658	3859667.039	211.32
2573	Grid	747260.346	3859319.993	227.46	2618	Grid	749146.6699	3859474.818	207.75	2663	Grid	748665.7158	3859668.333	219.22
2574	Grid	747119.6943	3859259.471	212.17	2619	Grid	747243.5768	3859513.922	207.23	2664	Grid	748761.3658	3859669.626	222
2575	Grid	747021.0562	3859158.078	193.97	2620	Grid	747159.1858	3859477.609	178.16	2665	Grid	748857.0158	3859670.919	215.98
2576	Grid	747426.3219	3859351.547	231.92	2621	Grid	747074.7947	3859441.296	171.11	2666	Grid	748952.6658	3859672.213	181.75
2577	Grid	747521.9719	3859352.84	230.8	2622	Grid	746990.4037	3859404.983	189.02	2667	Grid	747244.8914	3859715.633	217.01
2578	Grid	747617.6219	3859354.133	230.5	2623	Grid	746872.0379	3859283.311	222.17	2668	Grid	747084.1465	3859646.466	181.85
2579	Grid	747713.2719	3859355.427	210.89	2624	Grid	746838.0632	3859197.952	219.9	2669	Grid	746923.4017	3859577.298	155.98
2580	Grid	747808.9219	3859356.72	194.61	2625	Grid	746804.0885	3859112.593	202.45	2670	Grid	746730.3	3859426.836	155.1
2581	Grid	747904.5719	3859358.013	180.05	2626	Grid	746770.1137	3859027.233	192.8	2671	Grid	746665.5862	3859264.247	171.28
2582	Grid	748000.2219	3859359.307	187.37	2627	Grid	747327.9678	3859550.235	227.18	2672	Grid	746600.8725	3859101.658	170.21
2583	Grid	748095.8719	3859360.6	210.52	2628	Grid	747423.6178	3859551.528	224.21	2673	Grid	747420.9138	3859751.51	190.41
2584	Grid	748191.5219	3859361.893	220.6	2629	Grid	747519.2678	3859552.822	200.33	2674	Grid	747516.5638	3859752.804	184.37
2585	Grid	748287.1719	3859363.187	233.89	2630	Grid	747614.9178	3859554.115	212.74	2675	Grid	747612.2138	3859754.097	176.11
2586	Grid	748382.8219	3859364.48	232.75	2631	Grid	747710.5678	3859555.408	181.52	2676	Grid	747707.8638	3859755.39	176.03
2587	Grid	748478.4719	3859365.773	228.72	2632	Grid	747806.2178	3859556.702	172.08	2677	Grid	747803.5138	3859756.684	198.79
2588	Grid	748574.1219	3859367.067	232.62	2633	Grid	747901.8678	3859557.995	202.6	2678	Grid	747899.1638	3859757.977	220.48
2589	Grid	748669.7719	3859368.36	232.11	2634	Grid	747997.5178	3859559.288	216.17	2679	Grid	747994.8138	3859759.27	221.77
2590	Grid	748765.4219	3859369.653	225.14	2635	Grid	748093.1678	3859560.582	206.54	2680	Grid	748090.4638	3859760.564	220.17
2591	Grid	748861.0719	3859370.947	217.29	2636	Grid	748188.8178	3859561.875	215.59	2681	Grid	748186.1138	3859761.857	217.86
2592	Grid	748956.7219	3859372.24	185.81	2637	Grid	748284.4678	3859563.168	225.01	2682	Grid	748281.7638	3859763.15	220.93
2593	Grid	749052.3719	3859373.533	198.69	2638	Grid	748380.1178	3859564.462	225.26	2683	Grid	748377.4138	3859764.444	219.86
2594	Grid	749148.0219	3859374.827	225.72	2639	Grid	748475.7678	3859565.755	220.49	2684	Grid	748473.0638	3859765.737	207.17
2595	Grid	749243.6719	3859376.12	219.08	2640	Grid	748571.4178	3859567.048	219.45	2685	Grid	748568.7138	3859767.03	207.5
2596	Grid	747258.994	3859419.983	193.97	2641	Grid	748667.0678	3859568.342	221.65	2686	Grid	748664.3638	3859768.324	219
2597	Grid	747118.3423	3859359.462	192.44	2642	Grid	748762.7178	3859569.635	222.97	2687	Grid	748760.0138	3859769.617	219.55
2598	Grid	746949.3783	3859227.808	195.56	2643	Grid	748858.3678	3859570.928	207.05	2688	Grid	748855.6638	3859770.91	206.04
2599	Grid	746892.7537	3859085.542	212.92	2644	Grid	748954.0178	3859572.222	182.66	2689	Grid	748951.3138	3859772.204	174.01
2600	Grid	747424.9699	3859451.538	230.65	2645	Grid	747244.569	3859614.922	221.86	2690	Grid	747244.7951	3859816.164	179.77
2601	Grid	747520.6199	3859452.831	214.16	2646	Grid	747080.4753	3859544.313	169.92	2691	Grid	747086.562	3859748.078	157.16
2602	Grid	747616.2699	3859454.124	226.68	2647	Grid	746916.3816	3859473.705	175.99	2692	Grid	746928.3288	3859679.991	151.05
2603	Grid	747711.9199	3859455.418	200.69	2648	Grid	746801.3038	3859355.412	191.22	2693	Grid	746770.0956	3859611.904	150.23
2604	Grid	747807.5699	3859456.711	173.49	2649	Grid	746735.2418	3859189.436	201.84	2694	Grid	746659.1277	3859497.836	150.67
2605	Grid	747903.2199	3859458.004	182.86	2650	Grid	747422.2658	3859651.519	210.19	2695	Grid	746595.4251	3859337.788	155.08
2606	Grid	747998.8699	3859459.298	183.59	2651	Grid	747517.9158	3859652.813	198.28	2696	Grid	746531.7225	3859177.739	157.35
2607	Grid	748094.5199	3859460.591	208.08	2652	Grid	747613.5658	3859654.106	198.31	2697	Grid	747419.5617	3859851.501	217.13
2608	Grid	748190.1699	3859461.884	222.2	2653	Grid	747709.2158	3859655.399	170.3	2698	Grid	747515.2117	3859852.794	182.01
2609	Grid	748285.8199	3859463.178	226.95	2654	Grid	747804.8658	3859656.693	187.48	2699	Grid	747610.8617	3859854.088	165.48
2610	Grid	748381.4699	3859464.471	230.94	2655	Grid	747900.5158	3859657.986	204.03	2700	Grid	747706.5117	3859855.381	190.94

TABLE D-11: Receptors Locations and Elevations

Receptor		UTMs		ELEV (m)	Receptor		UTMs		ELEV (m)	Receptor		UTMs		ELEV (m)
#	Type	X (m)	Y (m)		#	Type	X (m)	Y (m)		#	Type	X (m)	Y (m)	
2701	Grid	747802.1617	3859856.674	217.98	2746	Grid	746478.4154	3859543.441	165.84	2791	Grid	747606.8057	3860154.06	158.84
2702	Grid	747897.8117	3859857.968	220.87	2747	Grid	746443.8115	3859456.501	159.37	2792	Grid	747702.4557	3860155.354	188.56
2703	Grid	747993.4617	3859859.261	217.87	2748	Grid	746409.2076	3859369.561	158.97	2793	Grid	747798.1057	3860156.647	202.48
2704	Grid	748089.1117	3859860.554	215.77	2749	Grid	746374.6038	3859282.621	158.2	2794	Grid	747893.7557	3860157.94	199.41
2705	Grid	748184.7617	3859861.848	208.73	2750	Grid	746339.9999	3859195.681	159.56	2795	Grid	747989.4057	3860159.234	206.71
2706	Grid	748280.4117	3859863.141	216	2751	Grid	746305.396	3859108.741	156	2796	Grid	748085.0557	3860160.527	205.96
2707	Grid	748376.0617	3859864.434	212.98	2752	Grid	746270.7921	3859021.801	157.03	2797	Grid	748180.7057	3860161.82	194.1
2708	Grid	748471.7117	3859865.728	204.22	2753	Grid	747321.2077	3860050.189	171.91	2798	Grid	748276.3557	3860163.114	184.02
2709	Grid	748567.3617	3859867.021	208.8	2754	Grid	747416.8577	3860051.483	209.29	2799	Grid	748372.0057	3860164.407	196.48
2710	Grid	748663.0117	3859868.314	211.44	2755	Grid	747512.5077	3860052.776	180.87	2800	Grid	748467.6557	3860165.7	205.48
2711	Grid	748758.6617	3859869.608	212.21	2756	Grid	747608.1577	3860054.069	160.52	2801	Grid	748563.3057	3860166.994	209.18
2712	Grid	748854.3117	3859870.901	189.98	2757	Grid	747703.8077	3860055.363	202.14	2802	Grid	748658.9557	3860168.287	208.56
2713	Grid	747244.4199	3859916.575	172.47	2758	Grid	747799.4577	3860056.656	209.12	2803	Grid	748754.6057	3860169.58	200.55
2714	Grid	747088.1402	3859849.329	153.91	2759	Grid	747895.1077	3860057.949	209.76	2804	Grid	748850.2557	3860170.874	177.84
2715	Grid	746931.8605	3859782.083	148.94	2760	Grid	747990.7577	3860059.243	207.64	2805	Grid	747235.3912	3860214.408	146.74
2716	Grid	746775.5808	3859714.837	157.07	2761	Grid	748086.4077	3860060.536	209.73	2806	Grid	747152.2789	3860178.646	145
2717	Grid	746587.843	3859568.554	155.94	2762	Grid	748182.0577	3860061.829	208.95	2807	Grid	747069.1665	3860142.883	148.99
2718	Grid	746524.9268	3859410.482	154.01	2763	Grid	748277.7077	3860063.123	203.53	2808	Grid	746986.0541	3860107.12	159.79
2719	Grid	746462.0107	3859252.409	153.73	2764	Grid	748373.3577	3860064.416	188.79	2809	Grid	746902.9417	3860071.357	170.62
2720	Grid	746399.0945	3859094.336	155.01	2765	Grid	748469.0077	3860065.709	203.68	2810	Grid	746819.8293	3860035.595	171.71
2721	Grid	747418.2097	3859951.492	213.32	2766	Grid	748564.6577	3860067.003	210.51	2811	Grid	746736.7169	3859999.832	209.72
2722	Grid	747513.8597	3859952.785	187.65	2767	Grid	748660.3077	3860068.296	208.64	2812	Grid	746653.6046	3859964.069	186.46
2723	Grid	747609.5097	3859954.079	159	2768	Grid	748755.9577	3860069.589	186.63	2813	Grid	746570.4922	3859928.306	178.5
2724	Grid	747705.1597	3859955.372	179.07	2769	Grid	748851.6077	3860070.883	169.65	2814	Grid	746487.3798	3859892.543	220.4
2725	Grid	747800.8097	3859956.665	200.21	2770	Grid	747235.4646	3860113.867	151.01	2815	Grid	746370.8075	3859772.715	202.56
2726	Grid	747896.4597	3859957.959	214.57	2771	Grid	747151.0736	3860077.554	147.65	2816	Grid	746337.3475	3859688.649	220.66
2727	Grid	747992.1097	3859959.252	213.28	2772	Grid	747066.6826	3860041.241	146.16	2817	Grid	746303.8875	3859604.583	187.93
2728	Grid	748087.7597	3859960.545	212.09	2773	Grid	746982.2915	3860004.928	147.8	2818	Grid	746270.4276	3859520.517	174.52
2729	Grid	748183.4097	3859961.839	208.67	2774	Grid	746897.9005	3859968.615	156.1	2819	Grid	746236.9676	3859436.451	195.09
2730	Grid	748279.0597	3859963.132	195.86	2775	Grid	746813.5094	3859932.302	180.09	2820	Grid	746203.5077	3859352.385	181.71
2731	Grid	748374.7097	3859964.425	207.33	2776	Grid	746729.1184	3859895.99	187.1	2821	Grid	746170.0477	3859268.319	186.81
2732	Grid	748470.3597	3859965.719	198.27	2777	Grid	746644.7274	3859859.677	165.78	2822	Grid	746136.5878	3859184.253	178.05
2733	Grid	748566.0097	3859967.012	210	2778	Grid	746560.3363	3859823.364	202.15	2823	Grid	746103.1278	3859100.188	195.61
2734	Grid	748661.6597	3859968.305	196.2	2779	Grid	746441.9706	3859701.691	183.71	2824	Grid	746069.6678	3859016.122	212.6
2735	Grid	748757.3097	3859969.599	197.69	2780	Grid	746407.9959	3859616.332	198.18	2825	Grid	747318.5036	3860250.171	151.28
2736	Grid	748852.9597	3859970.892	189.58	2781	Grid	746374.0211	3859530.973	173.35	2826	Grid	747414.1536	3860251.465	174.84
2737	Grid	747235.2539	3860013.204	156.46	2782	Grid	746340.0464	3859445.614	167.77	2827	Grid	747509.8036	3860252.758	156.54
2738	Grid	747149.3	3859976.219	152.34	2783	Grid	746306.0717	3859360.254	168.56	2828	Grid	747605.4536	3860254.051	182.04
2739	Grid	747063.3462	3859939.233	148.93	2784	Grid	746272.097	3859274.895	169.36	2829	Grid	747701.1036	3860255.345	198.71
2740	Grid	746977.3924	3859902.248	147.46	2785	Grid	746238.1222	3859189.536	169.47	2830	Grid	747796.7536	3860256.638	196.81
2741	Grid	746891.4385	3859865.262	146.86	2786	Grid	746204.1475	3859104.177	167.14	2831	Grid	747892.4036	3860257.931	192.63
2742	Grid	746805.4847	3859828.277	160.46	2787	Grid	746170.1728	3859018.818	179.18	2832	Grid	747988.0536	3860259.225	199.35
2743	Grid	746719.5309	3859791.291	158.5	2788	Grid	747319.8557	3860150.18	156.44	2833	Grid	748083.7036	3860260.518	195.89
2744	Grid	746633.577	3859754.306	183.99	2789	Grid	747415.5057	3860151.474	188.72	2834	Grid	748179.3536	3860261.811	182.02
2745	Grid	746513.0193	3859630.381	169.02	2790	Grid	747511.1557	3860152.767	166.81	2835	Grid	748275.0036	3860263.105	195.48

TABLE D-11: Receptors Locations and Elevations

Receptor		UTMs		ELEV (m)	Receptor		UTMs		ELEV (m)	Receptor		UTMs		ELEV (m)
#	Type	X (m)	Y (m)		#	Type	X (m)	Y (m)		#	Type	X (m)	Y (m)	
2836	Grid	748370.6536	3860264.398	200.84	2881	Grid	746910.0734	3860275.571	213.35	2926	Grid	746084.6961	3859803.327	196.1
2837	Grid	748466.3036	3860265.691	201.87	2882	Grid	746747.783	3860205.739	203.52	2927	Grid	746049.8502	3859715.779	192.16
2838	Grid	748561.9536	3860266.985	199.58	2883	Grid	746585.4925	3860135.906	199.37	2928	Grid	746015.0044	3859628.231	217.13
2839	Grid	748657.6036	3860268.278	203.87	2884	Grid	746423.2021	3860066.073	219.2	2929	Grid	745980.1585	3859540.683	222.35
2840	Grid	748753.2536	3860269.571	198.51	2885	Grid	746228.2436	3859914.165	240.87	2930	Grid	745945.3126	3859453.135	225.26
2841	Grid	748848.9036	3860270.865	176.01	2886	Grid	746162.9076	3859750.012	199.17	2931	Grid	745910.4668	3859365.587	205.73
2842	Grid	748944.5536	3860272.158	159.34	2887	Grid	746097.5716	3859585.86	202.28	2932	Grid	745875.6209	3859278.04	195.81
2843	Grid	749040.2036	3860273.451	194	2888	Grid	746032.2356	3859421.708	213.98	2933	Grid	745840.775	3859190.492	219.81
2844	Grid	749135.8536	3860274.745	192.14	2889	Grid	745966.8996	3859257.555	193.48	2934	Grid	745805.9291	3859102.944	215.6
2845	Grid	749231.5036	3860276.038	176.8	2890	Grid	745901.5636	3859093.403	220.85	2935	Grid	745771.0833	3859015.396	195.05
2846	Grid	749327.1536	3860277.331	166.71	2891	Grid	747411.4496	3860451.446	149.71	2936	Grid	747314.4475	3860550.144	143
2847	Grid	747235.1048	3860314.858	144	2892	Grid	747507.0996	3860452.74	174.85	2937	Grid	747410.0975	3860551.437	153.57
2848	Grid	747071.0111	3860244.249	158.14	2893	Grid	747602.7496	3860454.033	185.92	2938	Grid	747505.7475	3860552.73	177.4
2849	Grid	746906.9174	3860173.641	202.52	2894	Grid	747698.3996	3860455.326	193.26	2939	Grid	747601.3975	3860554.024	184.76
2850	Grid	746742.8237	3860103.032	207.1	2895	Grid	747794.0496	3860456.62	196.17	2940	Grid	747697.0475	3860555.317	190.12
2851	Grid	746578.73	3860032.424	181.45	2896	Grid	747889.6996	3860457.913	185.31	2941	Grid	747792.6975	3860556.61	191.38
2852	Grid	746414.6364	3859961.815	221.41	2897	Grid	747985.3496	3860459.206	173.69	2942	Grid	747888.3475	3860557.904	187.42
2853	Grid	746299.5585	3859843.523	227.54	2898	Grid	748080.9996	3860460.5	175.46	2943	Grid	747983.9975	3860559.197	178.83
2854	Grid	746233.4966	3859677.546	194.16	2899	Grid	748176.6496	3860461.793	194.76	2944	Grid	748079.6475	3860560.49	176.97
2855	Grid	746167.4346	3859511.57	211.52	2900	Grid	748272.2996	3860463.086	197.31	2945	Grid	748175.2975	3860561.784	187.82
2856	Grid	746101.3726	3859345.594	202.48	2901	Grid	748367.9496	3860464.38	195.39	2946	Grid	748270.9475	3860563.077	190.38
2857	Grid	746035.3107	3859179.618	182.91	2902	Grid	748463.5996	3860465.673	183.93	2947	Grid	748366.5975	3860564.37	178.72
2858	Grid	747412.8016	3860351.455	146.27	2903	Grid	748559.2496	3860466.966	193.41	2948	Grid	748462.2475	3860565.664	179.3
2859	Grid	747508.4516	3860352.749	156.95	2904	Grid	748654.8996	3860468.26	191.47	2949	Grid	748557.8975	3860566.957	181.57
2860	Grid	747604.1016	3860354.042	191.96	2905	Grid	748750.5496	3860469.553	172.71	2950	Grid	748653.5475	3860568.25	172.47
2861	Grid	747699.7516	3860355.335	198.38	2906	Grid	748846.1996	3860470.846	164.09	2951	Grid	748749.1975	3860569.544	163.01
2862	Grid	747795.4016	3860356.629	196.15	2907	Grid	748941.8496	3860472.14	160.48	2952	Grid	748844.8475	3860570.837	149.16
2863	Grid	747891.0516	3860357.922	184.18	2908	Grid	749037.4996	3860473.433	157.54	2953	Grid	748940.4975	3860572.13	143.59
2864	Grid	747986.7016	3860359.215	194.26	2909	Grid	749133.1496	3860474.726	152.19	2954	Grid	749036.1475	3860573.424	140.63
2865	Grid	748082.3516	3860360.509	176.01	2910	Grid	749228.7996	3860476.02	151.33	2955	Grid	749131.7975	3860574.717	141.59
2866	Grid	748178.0016	3860361.802	190.49	2911	Grid	749324.4496	3860477.313	145.75	2956	Grid	749227.4475	3860576.01	141.34
2867	Grid	748273.6516	3860363.095	199.22	2912	Grid	747227.8926	3860512.9	146.79	2957	Grid	749323.0975	3860577.304	143.96
2868	Grid	748369.3016	3860364.389	199.94	2913	Grid	747141.3377	3860475.656	191.89	2958	Grid	747227.6998	3860613.389	148.06
2869	Grid	748464.9516	3860365.682	196.57	2914	Grid	747054.7828	3860438.412	180.86	2959	Grid	747142.3041	3860576.644	184.91
2870	Grid	748560.6016	3860366.975	192.21	2915	Grid	746968.2279	3860401.167	176.27	2960	Grid	747056.9084	3860539.899	197.9
2871	Grid	748656.2516	3860368.269	195.8	2916	Grid	746881.673	3860363.923	195.77	2961	Grid	746971.5128	3860503.154	199
2872	Grid	748751.9016	3860369.562	196.17	2917	Grid	746795.1181	3860326.679	221.99	2962	Grid	746886.1171	3860466.408	204.79
2873	Grid	748847.5516	3860370.855	179.57	2918	Grid	746708.5632	3860289.435	231.72	2963	Grid	746800.7214	3860429.663	211.82
2874	Grid	748943.2016	3860372.149	157.01	2919	Grid	746622.0083	3860252.191	232.95	2964	Grid	746715.3257	3860392.918	215.05
2875	Grid	749038.8516	3860373.442	185.53	2920	Grid	746535.4534	3860214.947	218.82	2965	Grid	746629.93	3860356.172	221.82
2876	Grid	749134.5016	3860374.735	185.49	2921	Grid	746448.8985	3860177.703	208.41	2966	Grid	746544.5343	3860319.427	218.93
2877	Grid	749230.1516	3860376.029	173.22	2922	Grid	746362.3436	3860140.459	220.37	2967	Grid	746459.1386	3860282.682	230.69
2878	Grid	749325.8016	3860377.322	155.21	2923	Grid	746275.7886	3860103.215	245.22	2968	Grid	746373.7429	3860245.937	226.07
2879	Grid	747234.6543	3860415.237	145.04	2924	Grid	746154.3879	3859978.423	233.55	2969	Grid	746288.3472	3860209.191	228.34
2880	Grid	747072.3639	3860345.404	158.26	2925	Grid	746119.542	3859890.875	226.12	2970	Grid	746202.9515	3860172.446	246.36

TABLE D-11: Receptors Locations and Elevations

Receptor		UTMs		ELEV (m)	Receptor		UTMs		ELEV (m)	Receptor		UTMs		ELEV (m)
#	Type	X (m)	Y (m)		#	Type	X (m)	Y (m)		#	Type	X (m)	Y (m)	
2971	Grid	746083.1767	3860049.325	228.56	3016	Grid	746383.4421	3860350.683	235.96	3061	Grid	746809.3197	3860634.508	197.47
2972	Grid	746048.7975	3859962.95	203.63	3017	Grid	746299.0511	3860314.37	237.45	3062	Grid	746725.8077	3860598.573	207.4
2973	Grid	746014.4183	3859876.575	193.1	3018	Grid	746214.66	3860278.057	244.42	3063	Grid	746642.2958	3860562.639	216.12
2974	Grid	745980.0391	3859790.199	193.28	3019	Grid	746130.269	3860241.744	246.15	3064	Grid	746558.7838	3860526.704	224.19
2975	Grid	745945.6599	3859703.824	220.33	3020	Grid	746011.9032	3860120.072	234.84	3065	Grid	746475.2718	3860490.769	230.16
2976	Grid	745911.2807	3859617.448	240.5	3021	Grid	745977.9285	3860034.712	212.73	3066	Grid	746391.7599	3860454.835	234.62
2977	Grid	745876.9015	3859531.073	228.57	3022	Grid	745943.9538	3859949.353	219.77	3067	Grid	746308.2479	3860418.9	237.45
2978	Grid	745842.5224	3859444.698	215.45	3023	Grid	745909.9791	3859863.994	211.33	3068	Grid	746224.736	3860382.965	243.88
2979	Grid	745808.1432	3859358.322	208.23	3024	Grid	745876.0043	3859778.635	213.52	3069	Grid	746141.224	3860347.03	243.25
2980	Grid	745773.764	3859271.947	214.72	3025	Grid	745842.0296	3859693.276	237.61	3070	Grid	746057.712	3860311.096	244.3
2981	Grid	745739.3848	3859185.571	218.55	3026	Grid	745808.0549	3859607.916	242.51	3071	Grid	745940.5792	3860190.691	236.79
2982	Grid	745705.0056	3859099.196	210	3027	Grid	745774.0802	3859522.557	230.65	3072	Grid	745906.9584	3860106.221	234.5
2983	Grid	745670.6264	3859012.821	195.12	3028	Grid	745740.1054	3859437.198	225.33	3073	Grid	745873.3376	3860021.751	232.97
2984	Grid	747313.0955	3860650.135	143	3029	Grid	745706.1307	3859351.839	222.39	3074	Grid	745839.7168	3859937.281	220.51
2985	Grid	747408.7455	3860651.428	151.1	3030	Grid	745672.156	3859266.479	219.19	3075	Grid	745806.096	3859852.811	219.97
2986	Grid	747504.3955	3860652.721	174.11	3031	Grid	745638.1812	3859181.12	204.51	3076	Grid	745772.4751	3859768.341	237.43
2987	Grid	747600.0455	3860654.015	186.15	3032	Grid	745604.2065	3859095.761	194.87	3077	Grid	745738.8543	3859683.871	245.69
2988	Grid	747695.6955	3860655.308	186.94	3033	Grid	745570.2318	3859010.402	184.14	3078	Grid	745705.2335	3859599.4	245.14
2989	Grid	747791.3455	3860656.601	184.19	3034	Grid	747311.7435	3860750.125	143	3079	Grid	745671.6127	3859514.93	243.72
2990	Grid	747886.9955	3860657.895	182.17	3035	Grid	747407.3935	3860751.419	148.15	3080	Grid	745637.9918	3859430.46	231.93
2991	Grid	747982.6455	3860659.188	162.13	3036	Grid	747503.0435	3860752.712	170.11	3081	Grid	745604.371	3859345.99	218.34
2992	Grid	748078.2955	3860660.481	174.18	3037	Grid	747598.6935	3860754.005	180.84	3082	Grid	745570.7502	3859261.52	207.05
2993	Grid	748173.9455	3860661.775	182.76	3038	Grid	747694.3435	3860755.299	183.65	3083	Grid	745537.1294	3859177.05	198.54
2994	Grid	748269.5955	3860663.068	185.76	3039	Grid	747789.9935	3860756.592	174.38	3084	Grid	745503.5086	3859092.58	193.68
2995	Grid	748365.2455	3860664.361	170.08	3040	Grid	747885.6435	3860757.885	157.32	3085	Grid	745469.8877	3859008.11	193.86
2996	Grid	748460.8955	3860665.655	154.47	3041	Grid	747981.2935	3860759.179	171.52	3086	Grid	747310.3915	3860850.116	142.26
2997	Grid	748556.5455	3860666.948	150.92	3042	Grid	748076.9435	3860760.472	186.13	3087	Grid	747406.0415	3860851.41	145.06
2998	Grid	748652.1955	3860668.241	146.6	3043	Grid	748172.5935	3860761.765	183.41	3088	Grid	747501.6915	3860852.703	171.11
2999	Grid	748747.8455	3860669.535	142.81	3044	Grid	748268.2435	3860763.059	163.23	3089	Grid	747597.3415	3860853.996	181.27
3000	Grid	748843.4955	3860670.828	139.75	3045	Grid	748363.8935	3860764.352	149.08	3090	Grid	747692.9915	3860855.29	184.39
3001	Grid	748939.1455	3860672.121	137.11	3046	Grid	748459.5435	3860765.645	143.1	3091	Grid	747788.6415	3860856.583	168.23
3002	Grid	749034.7955	3860673.415	138.3	3047	Grid	748555.1935	3860766.939	138.5	3092	Grid	747884.2915	3860857.876	152.6
3003	Grid	749130.4455	3860674.708	138.25	3048	Grid	748650.8435	3860768.232	135.18	3093	Grid	747979.9415	3860859.17	178.36
3004	Grid	749226.0955	3860676.001	137.13	3049	Grid	748746.4935	3860769.525	134.05	3094	Grid	748075.5915	3860860.463	185.12
3005	Grid	749321.7455	3860677.295	137.34	3050	Grid	748842.1435	3860770.819	134.03	3095	Grid	748171.2415	3860861.756	163.69
3006	Grid	747227.3525	3860713.813	145.17	3051	Grid	748937.7935	3860772.112	134.01	3096	Grid	748266.8915	3860863.05	143.06
3007	Grid	747142.9614	3860677.5	165.43	3052	Grid	749033.4435	3860773.405	134	3097	Grid	748362.5415	3860864.343	137.18
3008	Grid	747058.5704	3860641.187	183.36	3053	Grid	749129.0935	3860774.699	134	3098	Grid	748458.1915	3860865.636	133.86
3009	Grid	746974.1793	3860604.874	189.49	3054	Grid	749224.7435	3860775.992	134.88	3099	Grid	748553.8415	3860866.93	132.85
3010	Grid	746889.7883	3860568.561	183.99	3055	Grid	749320.3935	3860777.285	134.93	3100	Grid	748649.4915	3860868.223	133
3011	Grid	746805.3973	3860532.248	183.09	3056	Grid	747226.8795	3860814.182	144.73	3101	Grid	748745.1415	3860869.516	133
3012	Grid	746721.0062	3860495.935	201.59	3057	Grid	747143.3675	3860778.247	164.92	3102	Grid	748840.7915	3860870.81	133
3013	Grid	746636.6152	3860459.622	212.77	3058	Grid	747059.8556	3860742.312	152.6	3103	Grid	748936.4415	3860872.103	133.68
3014	Grid	746552.2242	3860423.309	222.87	3059	Grid	746976.3436	3860706.377	163.72	3104	Grid	749032.0915	3860873.396	133.63
3015	Grid	746467.8331	3860386.996	231.82	3060	Grid	746892.8317	3860670.443	182.39	3105	Grid	749127.7415	3860874.69	133.64

TABLE D-11: Receptors Locations and Elevations

Receptor		UTMs		ELEV (m)	Receptor		UTMs		ELEV (m)	Receptor		UTMs		ELEV (m)
#	Type	X (m)	Y (m)		#	Type	X (m)	Y (m)		#	Type	X (m)	Y (m)	
3106	Grid	749223.3915	3860875.983	134	3151	Grid	749030.7394	3860973.387	133	3196	Grid	748890.3084	3861225.198	132
3107	Grid	749319.0415	3860877.276	134	3152	Grid	749126.3894	3860974.681	133	3197	Grid	748799.7726	3861207.282	131.1
3108	Grid	747226.3031	3860914.506	144.3	3153	Grid	749222.0394	3860975.974	133	3198	Grid	748709.2368	3861189.366	131
3109	Grid	747143.5668	3860878.905	173.1	3154	Grid	749317.6894	3860977.267	133	3199	Grid	748618.701	3861171.449	131
3110	Grid	747060.8305	3860843.304	180.3	3155	Grid	749316.8632	3858980.019	231.04	3200	Grid	748528.1652	3861153.533	130.4
3111	Grid	746895.3579	3860772.102	165.38	3156	Grid	749204.906	3858994.274	211.28	3201	Grid	748437.6294	3861135.617	130
3112	Grid	746812.6216	3860736.501	170.97	3157	Grid	749090.7317	3858978.404	192.2	3202	Grid	748347.0936	3861117.7	130.49
3113	Grid	746729.8853	3860700.901	187.64	3158	Grid	747323.0401	3858891.54	230.69	3203	Grid	748256.5578	3861099.784	131
3114	Grid	746647.149	3860665.3	194.73	3159	Grid	749207.6038	3861092.003	132.48	3204	Grid	748166.022	3861081.868	131
3115	Grid	746481.6763	3860594.098	209.48	3160	Grid	748909.7302	3858981.179	210.82	3205	Grid	748075.4862	3861063.952	132.5
3116	Grid	746398.94	3860558.497	227.72	3161	Grid	748808.0173	3858983.079	225.31	3206	Grid	749316.9299	3861403.914	129.54
3117	Grid	746316.2037	3860522.896	229.97	3162	Grid	748709.8918	3858973.14	228.71	3207	Grid	749225.9428	3861385.909	131
3118	Grid	746233.4674	3860487.295	221.98	3163	Grid	748205.222	3858969.786	216.69	3208	Grid	749134.9556	3861367.903	131.46
3119	Grid	746067.9948	3860416.093	245.61	3164	Grid	748105.9543	3858963.616	215.8	3209	Grid	749043.9685	3861349.898	131.92
3120	Grid	745985.2585	3860380.492	245.54	3165	Grid	748005.2656	3858962.136	195.8	3210	Grid	748952.9814	3861331.892	132
3121	Grid	745869.2136	3860261.205	233.93	3166	Grid	747600.4013	3858963.177	224.73	3211	Grid	748861.9942	3861313.886	131.26
3122	Grid	745835.9051	3860177.52	229.87	3167	Grid	747499.9974	3858960.757	232.44	3212	Grid	748771.0071	3861295.881	131
3123	Grid	745802.5965	3860093.834	231.48	3168	Grid	747400.4239	3858955.597	245.07	3213	Grid	748680.02	3861277.875	131
3124	Grid	745735.9794	3859926.463	231.76	3169	Grid	748557.3161	3858978.576	207.66	3214	Grid	748589.0328	3861259.87	130.13
3125	Grid	745702.6708	3859842.778	235.94	3170	Grid	748459.2485	3858973.268	198.46	3215	Grid	748498.0457	3861241.864	130
3126	Grid	745669.3623	3859759.092	238.52	3171	Grid	748357.3177	3858977.774	194.27	3216	Grid	748407.0586	3861223.858	130
3127	Grid	745602.7452	3859591.721	238.42	3172	Grid	747858.4703	3858972.852	229.89	3217	Grid	748316.0714	3861205.853	130
3128	Grid	745569.4366	3859508.036	228.81	3173	Grid	747759.5018	3858969.832	197.61	3218	Grid	748225.0843	3861187.847	130.14
3129	Grid	745536.1281	3859424.35	220.27	3174	Grid	749111.4702	3861091.158	133	3219	Grid	748134.0972	3861169.842	131
3130	Grid	745469.511	3859256.979	203.66	3175	Grid	749145.2001	3861208.444	132	3220	Grid	748043.11	3861151.836	131
3131	Grid	745436.2024	3859173.294	198.43	3176	Grid	749031.955	3861156.893	132.18	3221	Grid	747958.5802	3861085.255	136.56
3132	Grid	745402.8939	3859089.608	201.92	3177	Grid	748918.7099	3861105.342	132	3222	Grid	749336.1511	3861502.01	128.32
3133	Grid	747309.0394	3860950.107	142	3178	Grid	747218.4771	3859041.199	231.87	3223	Grid	749244.7563	3861483.923	129.98
3134	Grid	747404.6894	3860951.401	144.72	3179	Grid	747333.2851	3858748.884	252.98	3224	Grid	749153.3616	3861465.837	130.88
3135	Grid	747500.3394	3860952.694	168.03	3180	Grid	747172.9554	3859164.898	222.07	3225	Grid	749061.9668	3861447.751	130.49
3136	Grid	747595.9894	3860953.987	177.03	3181	Grid	747339.3787	3859901.144	211.48	3226	Grid	748970.572	3861429.664	131
3137	Grid	747691.6394	3860955.281	177.92	3182	Grid	747346.1231	3859393.6	220.77	3227	Grid	748879.1772	3861411.578	130.74
3138	Grid	747787.2894	3860956.574	151.66	3183	Grid	747332.0503	3858517.595	237.92	3228	Grid	748787.7824	3861393.492	130.86
3139	Grid	747882.9394	3860957.867	167.17	3184	Grid	748937.9911	3859914.554	170.65	3229	Grid	748696.3877	3861375.406	130
3140	Grid	747978.5894	3860959.161	176.5	3185	Grid	748941.3373	3860009.508	168.78	3230	Grid	748604.9929	3861357.319	130
3141	Grid	748074.2394	3860960.454	165.88	3186	Grid	749304.6072	3861109.56	132	3231	Grid	748513.5981	3861339.233	130
3142	Grid	748169.8894	3860961.747	141.38	3187	Grid	749278.522	3861207.731	132	3232	Grid	748422.2033	3861321.147	130
3143	Grid	748265.5394	3860963.041	132.9	3188	Grid	748828.3551	3861118.647	132	3233	Grid	748330.8085	3861303.061	129.57
3144	Grid	748361.1894	3860964.334	131	3189	Grid	748738.3217	3861100.83	131.19	3234	Grid	748239.4138	3861284.974	130
3145	Grid	748456.8394	3860965.627	131	3190	Grid	748648.2883	3861083.013	131	3235	Grid	748148.019	3861266.888	130
3146	Grid	748552.4894	3860966.921	131	3191	Grid	748558.2549	3861065.196	131	3236	Grid	748056.6242	3861248.802	130.07
3147	Grid	748648.1394	3860968.214	131.55	3192	Grid	749297.7196	3861305.821	131.04	3237	Grid	747965.2294	3861230.715	131
3148	Grid	748743.7894	3860969.507	132.14	3193	Grid	749207.1838	3861287.905	132	3238	Grid	747890.0992	3861149.079	132.01
3149	Grid	748839.4394	3860970.801	133	3194	Grid	749071.3801	3861261.031	132	3239	Grid	747837.8177	3861071.963	150.56
3150	Grid	748935.0894	3860972.094	133	3195	Grid	748980.8442	3861243.114	132	3240	Grid	749355.7294	3861600.175	129.43

TABLE D-11: Receptors Locations and Elevations

Receptor		UTMs		ELEV (m)	Receptor		UTMs		ELEV (m)	Receptor		UTMs		ELEV (m)
#	Type	X (m)	Y (m)		#	Type	X (m)	Y (m)		#	Type	X (m)	Y (m)	
3241	Grid	749265.3549	3861582.291	128	3286	Grid	749608.6223	3860897.983	135	3331	Grid	748287.9107	3861506.738	129
3242	Grid	749174.9805	3861564.407	128.6	3287	Grid	749707.6223	3860900.988	135	3332	Grid	748202.1384	3861468.195	129
3243	Grid	749084.6061	3861546.522	129.69	3288	Grid	749407.5884	3860991.927	133.31	3333	Grid	748888.3167	3861776.533	128
3244	Grid	748994.2317	3861528.638	128	3289	Grid	749506.5884	3860994.932	134	3334	Grid	748987.3167	3861779.538	128
3245	Grid	748903.8572	3861510.754	128.13	3290	Grid	749605.5884	3860997.937	134.55	3335	Grid	749086.3167	3861782.543	128
3246	Grid	748813.4828	3861492.869	130	3291	Grid	749704.5884	3861000.942	134.38	3336	Grid	749185.3167	3861785.548	128
3247	Grid	748723.1084	3861474.985	130	3292	Grid	749404.5544	3861091.881	132.35	3337	Grid	749284.3167	3861788.553	128
3248	Grid	748632.734	3861457.101	130	3293	Grid	749503.5544	3861094.886	132.99	3338	Grid	749383.3167	3861791.558	128.63
3249	Grid	748542.3595	3861439.216	130	3294	Grid	749602.5544	3861097.891	133.19	3339	Grid	749482.3167	3861794.563	132.41
3250	Grid	748451.9851	3861421.332	130	3295	Grid	749701.5544	3861100.896	128.84	3340	Grid	749581.3167	3861797.568	143.6
3251	Grid	748361.6107	3861403.447	129	3296	Grid	749401.5204	3861191.835	131.01	3341	Grid	749680.3167	3861800.573	147.88
3252	Grid	748271.2363	3861385.563	129.23	3297	Grid	749500.5204	3861194.84	128	3342	Grid	748800.6592	3861838.461	128
3253	Grid	748180.8619	3861367.679	129.09	3298	Grid	749599.5204	3861197.845	128	3343	Grid	748716.0356	3861800.435	128
3254	Grid	748090.4874	3861349.794	130	3299	Grid	749698.5204	3861200.85	128.29	3344	Grid	748631.4121	3861762.409	129.41
3255	Grid	748000.113	3861331.91	130	3300	Grid	749398.4865	3861291.789	128.58	3345	Grid	748546.7885	3861724.383	130.53
3256	Grid	747909.7386	3861314.026	130.44	3301	Grid	749497.4865	3861294.794	128	3346	Grid	748462.165	3861686.357	129
3257	Grid	747835.4471	3861233.3	131	3302	Grid	749596.4865	3861297.799	128	3347	Grid	748377.5414	3861648.331	129
3258	Grid	747783.7493	3861157.046	137.15	3303	Grid	749695.4865	3861300.804	131.02	3348	Grid	748292.9179	3861610.305	128.05
3259	Grid	747732.0515	3861080.792	159.53	3304	Grid	749494.4525	3861394.748	128	3349	Grid	748208.2943	3861572.279	128.66
3260	Grid	749428.826	3860292.249	180.51	3305	Grid	749593.4525	3861397.753	128	3350	Grid	748123.6708	3861534.253	128
3261	Grid	749527.826	3860295.254	175.38	3306	Grid	749692.4525	3861400.758	131.94	3351	Grid	748039.0472	3861496.227	128.16
3262	Grid	749626.826	3860298.259	154.51	3307	Grid	749491.4186	3861494.702	128.7	3352	Grid	747954.4237	3861458.201	129
3263	Grid	749725.826	3860301.264	144.36	3308	Grid	749590.4186	3861497.707	132.45	3353	Grid	747869.8001	3861420.175	130
3264	Grid	749425.7921	3860392.203	158.01	3309	Grid	749689.4186	3861500.712	131.87	3354	Grid	747785.1766	3861382.149	131
3265	Grid	749524.7921	3860395.208	144.45	3310	Grid	749488.3846	3861594.656	130.59	3355	Grid	747667.4778	3861257.444	137.04
3266	Grid	749623.7921	3860398.213	142.47	3311	Grid	749587.3846	3861597.661	130.49	3356	Grid	747634.4026	3861170.766	150.54
3267	Grid	749722.7921	3860401.218	142	3312	Grid	749686.3846	3861600.666	129.35	3357	Grid	747601.3274	3861084.087	168.62
3268	Grid	749422.7581	3860492.157	143.07	3313	Grid	748804.2382	3861637.435	129	3358	Grid	748885.2827	3861876.487	128
3269	Grid	749521.7581	3860495.162	141.8	3314	Grid	748717.1257	3861598.291	129	3359	Grid	748984.2827	3861879.492	128
3270	Grid	749620.7581	3860498.167	140.52	3315	Grid	748630.0132	3861559.146	129.36	3360	Grid	749083.2827	3861882.497	128
3271	Grid	749719.7581	3860501.172	137.05	3316	Grid	748891.3507	3861676.579	128	3361	Grid	749182.2827	3861885.502	128.85
3272	Grid	749419.7242	3860592.111	141.14	3317	Grid	748990.3507	3861679.584	128	3362	Grid	749281.2827	3861888.507	140.02
3273	Grid	749518.7242	3860595.116	137	3318	Grid	749089.3507	3861682.589	128.85	3363	Grid	749380.2827	3861891.512	148.38
3274	Grid	749617.7242	3860598.121	137	3319	Grid	749188.3507	3861685.594	128.44	3364	Grid	749479.2827	3861894.517	147.91
3275	Grid	749716.7242	3860601.126	136.71	3320	Grid	749287.3507	3861688.599	129.21	3365	Grid	749578.2827	3861897.522	149.51
3276	Grid	749416.6902	3860692.065	136.16	3321	Grid	749386.3507	3861691.604	128.36	3366	Grid	749677.2827	3861900.527	151.88
3277	Grid	749515.6902	3860695.07	136	3322	Grid	749485.3507	3861694.609	128.04	3367	Grid	748792.6474	3861936.178	127.55
3278	Grid	749614.6902	3860698.075	136.3	3323	Grid	749584.3507	3861697.614	129.84	3368	Grid	748703.046	3861895.916	125.28
3279	Grid	749713.6902	3860701.08	136	3324	Grid	749683.3507	3861700.619	134.46	3369	Grid	748613.4446	3861855.653	128.01
3280	Grid	749413.6563	3860792.019	135	3325	Grid	748802.5444	3861737.991	128	3370	Grid	748523.8432	3861815.39	130.23
3281	Grid	749512.6563	3860795.024	135	3326	Grid	748716.7721	3861699.449	128.1	3371	Grid	748434.2417	3861775.127	129.58
3282	Grid	749611.6563	3860798.029	135.04	3327	Grid	748630.9998	3861660.907	129	3372	Grid	748344.6403	3861734.864	128
3283	Grid	749710.6563	3860801.034	136	3328	Grid	748545.2275	3861622.364	129	3373	Grid	748255.0389	3861694.601	128
3284	Grid	749410.6223	3860891.973	134	3329	Grid	748459.4553	3861583.822	129	3374	Grid	748165.4375	3861654.338	128
3285	Grid	749509.6223	3860894.978	134	3330	Grid	748373.683	3861545.28	129	3375	Grid	748075.8361	3861614.075	128

TABLE D-11: Receptors Locations and Elevations

Receptor		UTMs		ELEV (m)	Receptor		UTMs		ELEV (m)	Receptor		UTMs		ELEV (m)
#	Type	X (m)	Y (m)		#	Type	X (m)	Y (m)		#	Type	X (m)	Y (m)	
3376	Grid	747986.2347	3861573.813	129	3421	Grid	748701.9559	3862098.06	124.95	3466	Grid	749936.1866	3859926.246	192.91
3377	Grid	747896.6333	3861533.55	129.57	3422	Grid	748614.8434	3862058.916	121.14	3467	Grid	749938.652	3859832.8	183.02
3378	Grid	747807.0319	3861493.287	130	3423	Grid	748527.731	3862019.771	122.42	3468	Grid	749941.1174	3859739.354	183.57
3379	Grid	747717.4305	3861453.024	131	3424	Grid	748440.6185	3861980.627	124.24	3469	Grid	749943.5827	3859645.908	206.08
3380	Grid	747592.8083	3861320.984	133.71	3425	Grid	748353.506	3861941.482	124.7	3470	Grid	749946.0481	3859552.462	211.99
3381	Grid	747557.7874	3861229.207	144.24	3426	Grid	748266.3935	3861902.338	121.72	3471	Grid	749948.5135	3859459.016	218.87
3382	Grid	747522.7666	3861137.429	152.26	3427	Grid	748179.281	3861863.194	123.12	3472	Grid	749950.9789	3859365.569	221.59
3383	Grid	747487.7458	3861045.652	153.92	3428	Grid	748092.1686	3861824.049	126.39	3473	Grid	749953.4443	3859272.123	225.3
3384	Grid	748882.2488	3861976.441	127.17	3429	Grid	748005.0561	3861784.905	128.07	3474	Grid	749955.9097	3859178.677	235.57
3385	Grid	748981.2488	3861979.446	128.06	3430	Grid	747917.9436	3861745.76	129	3475	Grid	749958.375	3859085.231	246.37
3386	Grid	749080.2488	3861982.451	130.44	3431	Grid	747830.8311	3861706.616	129	3476	Grid	749960.8404	3858991.785	256.45
3387	Grid	749179.2488	3861985.456	146.68	3432	Grid	747743.7186	3861667.471	129	3477	Grid	749997.4676	3860279.272	145.44
3388	Grid	749278.2488	3861988.461	147.54	3433	Grid	747656.6061	3861628.327	129.47	3478	Grid	749863.1803	3860446.639	138.86
3389	Grid	749377.2488	3861991.466	149.45	3434	Grid	747569.4937	3861589.182	130.15	3479	Grid	750031.221	3860115.776	163.37
3390	Grid	749476.2488	3861994.471	150.74	3435	Grid	747448.3332	3861460.81	132	3480	Grid	750033.6864	3860022.33	193.67
3391	Grid	749575.2488	3861997.476	152.88	3436	Grid	747414.2852	3861371.582	133.03	3481	Grid	750036.1518	3859928.884	195.3
3392	Grid	749674.2488	3862000.481	155.28	3437	Grid	747380.2372	3861282.354	135	3482	Grid	750038.6172	3859835.438	198.6
3393	Grid	748790.9409	3862036.729	127.07	3438	Grid	747346.1891	3861193.126	139.23	3483	Grid	750041.0826	3859741.991	202.57
3394	Grid	748702.6669	3861997.063	123.65	3439	Grid	747312.1411	3861103.899	141.39	3484	Grid	750043.548	3859648.545	196.08
3395	Grid	748614.3929	3861957.396	124.47	3440	Grid	748876.1809	3862176.349	132.29	3485	Grid	750046.0133	3859555.099	206.63
3396	Grid	748526.1189	3861917.73	126.82	3441	Grid	748975.1809	3862179.354	147.52	3486	Grid	750048.4787	3859461.653	218.07
3397	Grid	748437.8449	3861878.063	129	3442	Grid	749074.1809	3862182.359	146.66	3487	Grid	750050.9441	3859368.207	221.82
3398	Grid	748349.571	3861838.397	128.19	3443	Grid	749173.1809	3862185.364	146.1	3488	Grid	750053.4095	3859274.761	222.87
3399	Grid	748261.297	3861798.731	125.77	3444	Grid	749272.1809	3862188.369	149.33	3489	Grid	750055.8749	3859181.314	208.5
3400	Grid	748173.023	3861759.064	126.11	3445	Grid	749371.1809	3862191.374	153.24	3490	Grid	750058.3403	3859087.868	230.38
3401	Grid	748084.749	3861719.398	127.64	3446	Grid	749470.1809	3862194.379	155.4	3491	Grid	750060.8056	3858994.422	226.61
3402	Grid	747996.475	3861679.731	129	3447	Grid	749569.1809	3862197.384	156.92	3492	Grid	750097.4328	3860281.909	144.05
3403	Grid	747908.201	3861640.065	129	3448	Grid	749668.1809	3862200.389	159.06	3493	Grid	750034.8566	3860422.009	140
3404	Grid	747819.9271	3861600.399	130	3449	Grid	749828.8252	3860203.947	159.8	3494	Grid	749931.8574	3860519.326	138.4
3405	Grid	747731.6531	3861560.732	130	3450	Grid	749831.2906	3860110.501	159.8	3495	Grid	750131.1862	3860118.413	159.18
3406	Grid	747643.3791	3861521.066	131	3451	Grid	749833.756	3860017.055	165.69	3496	Grid	750133.6516	3860024.967	188.04
3407	Grid	747520.6031	3861390.982	131.38	3452	Grid	749836.2214	3859923.609	174.24	3497	Grid	750136.117	3859931.521	182.54
3408	Grid	747486.1012	3861300.564	134.32	3453	Grid	749838.6868	3859830.163	185.26	3498	Grid	750138.5824	3859838.075	193.1
3409	Grid	747451.5992	3861210.147	135.29	3454	Grid	749841.1521	3859736.717	193.35	3499	Grid	750141.0478	3859744.629	205.98
3410	Grid	747417.0972	3861119.729	141.02	3455	Grid	749843.6175	3859643.27	198.61	3500	Grid	750143.5132	3859651.183	210.35
3411	Grid	748879.2148	3862076.395	129.4	3456	Grid	749846.0829	3859549.824	198.33	3501	Grid	750145.9786	3859557.736	210.93
3412	Grid	748978.2148	3862079.4	136.47	3457	Grid	749848.5483	3859456.378	207.73	3502	Grid	750148.4439	3859464.29	211.57
3413	Grid	749077.2148	3862082.405	146.45	3458	Grid	749851.0137	3859362.932	220.45	3503	Grid	750150.9093	3859370.844	211.89
3414	Grid	749176.2148	3862085.41	148	3459	Grid	749853.4791	3859269.486	229.88	3504	Grid	750153.3747	3859277.398	199.04
3415	Grid	749275.2148	3862088.415	149.04	3460	Grid	749855.9444	3859176.04	235.25	3505	Grid	750155.8401	3859183.952	192.89
3416	Grid	749374.2148	3862091.42	150.7	3461	Grid	749858.4098	3859082.594	248.63	3506	Grid	750158.3055	3859090.506	192.03
3417	Grid	749473.2148	3862094.425	153.07	3462	Grid	749860.8752	3858989.147	256.76	3507	Grid	750160.7709	3858997.06	194.73
3418	Grid	749572.2148	3862097.43	155.94	3463	Grid	749897.5023	3860276.635	146.42	3508	Grid	750197.398	3860284.547	141.94
3419	Grid	749671.2148	3862100.435	158.07	3464	Grid	749931.2558	3860113.139	177.97	3509	Grid	750134.8218	3860424.647	140
3420	Grid	748789.0684	3862137.205	128.84	3465	Grid	749933.7212	3860019.692	195.44	3510	Grid	750000.5345	3860592.013	138.22

TABLE D-11: Receptors Locations and Elevations

Receptor		UTMs		ELEV (m)	Receptor		UTMs		ELEV (m)	Receptor		UTMs		ELEV (m)
#	Type	X (m)	Y (m)		#	Type	X (m)	Y (m)		#	Type	X (m)	Y (m)	
3511	Grid	749857.1124	3860646.547	137	3556	Grid	750440.9434	3859752.541	173.74	3601	Grid	750466.9322	3861106.278	138.44
3512	Grid	750231.1515	3860121.051	168.33	3557	Grid	750443.4088	3859659.095	179.84	3602	Grid	750380.8789	3861138.998	134
3513	Grid	750233.6168	3860027.605	160.05	3558	Grid	750445.8742	3859565.649	199.42	3603	Grid	750294.8256	3861171.718	134
3514	Grid	750236.0822	3859934.158	172.81	3559	Grid	750448.3396	3859472.202	209.93	3604	Grid	750208.7723	3861204.438	134
3515	Grid	750238.5476	3859840.712	196.78	3560	Grid	750450.805	3859378.756	214.86	3605	Grid	750122.719	3861237.158	134.36
3516	Grid	750241.013	3859747.266	204.41	3561	Grid	750453.2704	3859285.31	222.82	3606	Grid	750036.6657	3861269.878	134.42
3517	Grid	750243.4784	3859653.82	208.31	3562	Grid	750455.7357	3859191.864	222.76	3607	Grid	749950.6124	3861302.598	133.95
3518	Grid	750245.9438	3859560.374	205.23	3563	Grid	750458.2011	3859098.418	231.91	3608	Grid	749864.5591	3861335.318	134.76
3519	Grid	750248.4092	3859466.928	191.61	3564	Grid	750460.6665	3859004.972	242.14	3609	Grid	749778.5058	3861368.038	133.3
3520	Grid	750250.8745	3859373.481	183.48	3565	Grid	750492.8239	3860302.466	140	3610	Grid	750658.6394	3861063.459	138.7
3521	Grid	750253.3399	3859280.035	184.13	3566	Grid	750421.3083	3860462.58	139	3611	Grid	750536.9131	3861178.47	144.07
3522	Grid	750255.8053	3859186.589	201.31	3567	Grid	750349.7926	3860622.695	139	3612	Grid	750452.1637	3861210.694	144.27
3523	Grid	750258.2707	3859093.143	213.43	3568	Grid	750196.3214	3860813.971	138	3613	Grid	750367.4142	3861242.918	143.51
3524	Grid	750260.7361	3858999.697	213.61	3569	Grid	750032.4104	3860876.294	137	3614	Grid	750282.6647	3861275.142	144.82
3525	Grid	750291.1056	3860301.194	140	3570	Grid	749868.4994	3860938.618	135.46	3615	Grid	750197.9153	3861307.367	144.44
3526	Grid	750253.5599	3860385.254	140	3571	Grid	750531.0471	3860128.963	163.81	3616	Grid	750113.1658	3861339.591	143.14
3527	Grid	750216.0141	3860469.314	140	3572	Grid	750533.5125	3860035.517	191.19	3617	Grid	750028.4164	3861371.815	134.51
3528	Grid	750178.4684	3860553.374	139	3573	Grid	750535.9779	3859942.071	189.99	3618	Grid	749943.6669	3861404.039	129.49
3529	Grid	750054.8694	3860670.154	138	3574	Grid	750538.4433	3859848.624	197.7	3619	Grid	749858.9175	3861436.263	128.44
3530	Grid	749968.8161	3860702.874	137.32	3575	Grid	750540.9086	3859755.178	194.9	3620	Grid	749774.168	3861468.487	129.57
3531	Grid	749882.7628	3860735.594	137	3576	Grid	750543.374	3859661.732	172.96	3621	Grid	750763.3452	3861055.483	137.64
3532	Grid	749796.7096	3860768.314	136	3577	Grid	750545.8394	3859568.286	187.06	3622	Grid	750606.6768	3861250.744	149.92
3533	Grid	750328.6513	3860217.134	146.87	3578	Grid	750548.3048	3859474.84	207.7	3623	Grid	750439.3509	3861314.366	157.78
3534	Grid	750331.1167	3860123.688	179.09	3579	Grid	750550.7702	3859381.394	216.77	3624	Grid	750272.0251	3861377.988	154.46
3535	Grid	750333.5821	3860030.242	167.43	3580	Grid	750553.2356	3859287.947	221.83	3625	Grid	750104.6992	3861441.61	152.31
3536	Grid	750336.0474	3859936.796	165.73	3581	Grid	750555.701	3859194.501	222.57	3626	Grid	749937.3734	3861505.232	147.09
3537	Grid	750338.5128	3859843.35	170.76	3582	Grid	750558.1663	3859101.055	232.98	3627	Grid	750903.4234	3860968.313	138
3538	Grid	750340.9782	3859749.903	177.21	3583	Grid	750560.6317	3859007.609	245.84	3628	Grid	750831.2201	3861129.967	138.01
3539	Grid	750343.4436	3859656.457	182.81	3584	Grid	750522.9496	3860461.465	139.23	3629	Grid	750676.2733	3861323.082	155.22
3540	Grid	750345.909	3859563.011	179.17	3585	Grid	750452.5514	3860619.078	139	3630	Grid	750510.7862	3861386.005	161.1
3541	Grid	750348.3744	3859469.565	182.79	3586	Grid	750382.1532	3860776.69	138	3631	Grid	750345.2991	3861448.928	159.39
3542	Grid	750350.8398	3859376.119	205.77	3587	Grid	750266.2791	3860886.171	138	3632	Grid	750179.812	3861511.851	158.37
3543	Grid	750353.3051	3859282.673	203.95	3588	Grid	750104.9292	3860947.521	137	3633	Grid	750014.3249	3861574.774	155.86
3544	Grid	750355.7705	3859189.227	204.91	3589	Grid	749943.5793	3861008.871	134.12	3634	Grid	749848.8378	3861637.697	146.88
3545	Grid	750358.2359	3859095.78	232.1	3590	Grid	750519.9249	3860694.684	139	3635	Grid	751006.483	3860964.022	139.61
3546	Grid	750360.7013	3859002.334	244.23	3591	Grid	750450.3958	3860850.35	138	3636	Grid	750934.9674	3861124.136	138.99
3547	Grid	750392.1137	3860301.497	140	3592	Grid	750335.9522	3860958.48	138	3637	Grid	750863.4517	3861284.251	143.08
3548	Grid	750319.1082	3860464.947	139.04	3593	Grid	750176.5943	3861019.072	137	3638	Grid	750745.7384	3861395.47	156.42
3549	Grid	750246.1026	3860628.397	139	3594	Grid	750017.2363	3861079.665	133.18	3639	Grid	750581.8274	3861457.793	163
3550	Grid	750125.9369	3860741.933	138	3595	Grid	749857.8784	3861140.257	129.45	3640	Grid	750417.9163	3861520.117	162.12
3551	Grid	749958.6111	3860805.555	137	3596	Grid	750518.7252	3860923.816	137.98	3641	Grid	750254.0053	3861582.441	161
3552	Grid	750431.0819	3860126.325	177.14	3597	Grid	750405.4261	3861030.864	137	3642	Grid	750090.0943	3861644.764	159.19
3553	Grid	750433.5473	3860032.879	172.39	3598	Grid	750247.6618	3861090.851	136.38	3643	Grid	749926.1832	3861707.088	153.49
3554	Grid	750436.0127	3859939.433	190.15	3599	Grid	750089.8974	3861150.837	134.08	3644	Grid	751124.3272	3860926.631	140
3555	Grid	750438.478	3859845.987	183.67	3600	Grid	749932.133	3861210.824	129.14	3645	Grid	751086.3345	3861011.692	139.01

TABLE D-11: Receptors Locations and Elevations

Receptor		UTMs		ELEV (m)	Receptor		UTMs		ELEV (m)	Receptor		UTMs		ELEV (m)
#	Type	X (m)	Y (m)		#	Type	X (m)	Y (m)		#	Type	X (m)	Y (m)	
3646	Grid	751048.3418	3861096.752	139.12	3691	Grid	751145.1891	3861332.817	146.24	3736	Grid	749752.5468	3862168.311	160
3647	Grid	751010.3491	3861181.813	157.27	3692	Grid	751108.0345	3861416.001	150.32	3737	Grid	749758.4401	3859086.479	244.7
3648	Grid	750972.3564	3861266.874	145	3693	Grid	751070.8799	3861499.186	156.59	3738	Grid	749755.9702	3859186.449	233.87
3649	Grid	750934.3637	3861351.935	147.31	3694	Grid	750948.5684	3861614.749	174.84	3739	Grid	749753.5003	3859286.418	225.27
3650	Grid	750809.2933	3861470.105	160.21	3695	Grid	750863.4115	3861647.128	172.99	3740	Grid	749751.0304	3859386.388	209.36
3651	Grid	750722.2156	3861503.214	163.55	3696	Grid	750778.2546	3861679.507	171.35	3741	Grid	749748.5605	3859486.357	204.91
3652	Grid	750635.1378	3861536.324	165.13	3697	Grid	750693.0977	3861711.886	170.62	3742	Grid	749746.0906	3859586.327	205.76
3653	Grid	750548.0601	3861569.433	165.57	3698	Grid	750607.9408	3861744.265	171.19	3743	Grid	749743.6207	3859686.296	195.47
3654	Grid	750460.9824	3861602.542	164.95	3699	Grid	750522.7839	3861776.644	170.11	3744	Grid	749741.1508	3859786.266	197.35
3655	Grid	750373.9046	3861635.652	161.89	3700	Grid	750437.627	3861809.024	168.25	3745	Grid	749738.6809	3859886.235	194.18
3656	Grid	750286.8269	3861668.761	159.21	3701	Grid	750352.4701	3861841.403	166.22	3746	Grid	749736.211	3859986.205	195.14
3657	Grid	750199.7492	3861701.871	158.02	3702	Grid	750267.3132	3861873.782	164.83	3747	Grid	749733.7411	3860086.174	184.52
3658	Grid	750112.6714	3861734.98	158.09	3703	Grid	750182.1563	3861906.161	164.07	3748	Grid	749731.2712	3860186.144	175.83
3659	Grid	750025.5937	3861768.09	158.06	3704	Grid	750096.9993	3861938.54	163.31	3749	Grid	750547.0018	3860806.481	138
3660	Grid	749938.516	3861801.199	156.45	3705	Grid	750011.8424	3861970.919	161.57	3750	Residential	748145.3923	3856035.935	212.37
3661	Grid	749851.4382	3861834.309	154.65	3706	Grid	749926.6855	3862003.298	160.02	3751	Residential	749982.5037	3855986.389	268.88
3662	Grid	749764.3605	3861867.418	152.85	3707	Grid	749841.5286	3862035.677	159.93	3752	Residential	750008.0833	3855959.005	264.78
3663	Grid	751265.4139	3860837.203	140.84	3708	Grid	749756.3717	3862068.056	159.02	3753	Residential	749701.3263	3855353.695	225.81
3664	Grid	751227.8682	3860921.263	140	3709	Grid	751633.1299	3860064.528	143.21	3754	Residential	749807.59	3855282.83	236.34
3665	Grid	751190.3224	3861005.323	140	3710	Grid	751507.3072	3860748.528	141.45	3755	Residential	749941.29	3855483.39	220.59
3666	Grid	751152.7767	3861089.383	140.57	3711	Grid	751470.4976	3860830.94	141.95	3756	Residential	750008.15	3855508.22	218.6
3667	Grid	751115.231	3861173.443	157.51	3712	Grid	751433.6881	3860913.352	142.7	3757	Residential	750716.79	3855177.78	239.74
3668	Grid	751077.6853	3861257.503	146.57	3713	Grid	751396.8786	3860995.763	144.21	3758	Residential	751151.43	3855485.23	227
3669	Grid	751040.1396	3861341.563	148.92	3714	Grid	751360.0691	3861078.175	144.94	3759	Residential	751215.22	3855565.39	227.84
3670	Grid	751002.5939	3861425.623	155.22	3715	Grid	751323.2595	3861160.587	161.49	3760	Residential	751239.15	3855549.84	228.47
3671	Grid	750878.9949	3861542.403	171.01	3716	Grid	751286.45	3861242.999	161.31	3761	Residential	750347.58	3856701.01	304.84
3672	Grid	750792.9416	3861575.122	169.39	3717	Grid	751249.6405	3861325.41	154.16	3762	Residential	750409.8	3856778.8	314.1
3673	Grid	750706.8883	3861607.842	167.96	3718	Grid	751212.831	3861407.822	147.4	3763	Residential	750488.78	3856723.75	306.02
3674	Grid	750620.835	3861640.562	167.94	3719	Grid	751176.0214	3861490.234	150.93	3764	Residential	750750.85	3856415.02	293.7
3675	Grid	750534.7817	3861673.282	168.06	3720	Grid	751139.2119	3861572.646	159.11	3765	Residential	750749.65	3856282.19	329.77
3676	Grid	750448.7284	3861706.002	164.44	3721	Grid	751018.0364	3861687.136	180.12	3766	Residential	750939.91	3856291.76	305.28
3677	Grid	750362.6751	3861738.722	161.27	3722	Grid	750933.6705	3861719.214	177.21	3767	Residential	751103.85	3856319.29	273
3678	Grid	750276.6218	3861771.442	160.9	3723	Grid	750849.3045	3861751.292	174.51	3768	Residential	751021.29	3856178.08	282.51
3679	Grid	750190.5685	3861804.162	161.39	3724	Grid	750764.9385	3861783.371	173.49	3769	Residential	751301.3	3856352.79	255.95
3680	Grid	750104.5152	3861836.882	161.17	3725	Grid	750680.5725	3861815.449	172.97	3770	Residential	751362.33	3856385.1	261.29
3681	Grid	750018.462	3861869.602	159.92	3726	Grid	750596.2066	3861847.527	172.85	3771	Residential	750393.23	3857208.32	301.29
3682	Grid	749932.4087	3861902.322	158.62	3727	Grid	750511.8406	3861879.606	171.26	3772	Residential	749991.53	3859040.17	252.83
3683	Grid	749846.3554	3861935.042	157.06	3728	Grid	750427.4746	3861911.684	170.43	3773	Residential	749942.9	3859117.41	242.1
3684	Grid	749760.3021	3861967.761	156.06	3729	Grid	750343.1087	3861943.762	168.69	3774	Residential	749799.86	3859351.99	222.41
3685	Grid	751368.1168	3860833.711	141	3730	Grid	750258.7427	3861975.841	167.85	3775	Residential	749977.23	3859460.7	218.87
3686	Grid	751330.9622	3860916.895	141.57	3731	Grid	750174.3767	3862007.919	166.2	3776	Residential	750194.64	3859552.24	210
3687	Grid	751293.8076	3861000.079	140	3732	Grid	750090.0107	3862039.998	165.05	3777	Residential	750197.5	3859886.94	191.33
3688	Grid	751256.653	3861083.264	143.58	3733	Grid	750005.6448	3862072.076	163.13	3778	Residential	751891.05	3859683.83	158.85
3689	Grid	751219.4983	3861166.448	157.05	3734	Grid	749921.2788	3862104.154	161.75	3779	Residential	750394.89	3860184.46	152.39
3690	Grid	751182.3437	3861249.633	156.92	3735	Grid	749836.9128	3862136.233	161.35	3780	Residential	750366.29	3860170.15	156.01

TABLE D-11: Receptors Locations and Elevations

Receptor		UTMs		ELEV (m)	Receptor		UTMs		ELEV (m)	Receptor		UTMs		ELEV (m)
#	Type	X (m)	Y (m)		#	Type	X (m)	Y (m)		#	Type	X (m)	Y (m)	
3781	Residential	750340.54	3860193.04	151	3799	Work	746553.9	3857885.18	178.82	3817	Road	747892.17	3856568.54	191.82
3782	Residential	750094.52	3860218.79	149.06	3800	Work	748567.47	3861547.97	129	3818	Road	747870.61	3856570.34	191.16
3783	Residential	750057.33	3860230.23	150.19	3801	Work	750872.93	3860105.15	145	3819	Road	747856.24	3856572.59	190.76
3784	Residential	750039.7106	3860248.953	148.63	3802	Road	748117.17	3856338.15	194.61	3820	Road	747847.26	3856575.28	190.55
3785	Residential	750011.6	3860307.23	144.01	3803	Road	748098.31	3856357.46	193.32	3821	Road	747831.99	3856582.47	190.28
3786	Residential	749927.12	3860354.2	146.39	3804	Road	748089.32	3856370.49	192.87	3822	Road	747811.93	3856593.78	189.99
3787	Residential	749727.82	3860675.35	136	3805	Road	748077.65	3856388.45	192.24	3823	Road	747793.11	3856605.14	189.74
3788	Residential	748974.59	3861013.98	133	3806	Road	748061.93	3856410.91	192	3824	Road	747772.67	3856618.44	189.48
3789	Residential	748949.99	3860989.38	133	3807	Road	748040.82	3856440.55	192	3825	Road	747757.74	3856628.18	188.87
3790	Residential	748863.89	3860961.27	133	3808	Road	748012.98	3856477.82	192	3826	Road	747733.4	3856641.48	188.4
3791	Residential	748879.71	3861015.74	132.76	3809	Road	747970.76	3856530.37	192.34	3827	Road	747716.85	3856651.54	188.13
3792	Residential	748533.56	3860659.05	153.83	3810	Road	747962.23	3856538.9	192.25	3828	Road	747699.98	3856664.19	187.57
3793	Residential	747298.22	3860355.22	146.05	3811	Road	747951.45	3856549.68	192.23	3829	Road	747686.35	3856677.82	187.13
3794	Residential	748912.69	3859604.02	190.45	3812	Road	747941.57	3856556.87	192.29	3830	Road	747658.01	3856707.42	186.64
3795	Residential	748761.9	3859380.11	225.75	3813	Road	747932.59	3856561.36	192.19	3831	Road	747626.83	3856740.48	186.42
3796	Residential	748757.33	3859009.99	230.91	3814	Road	747925.85	3856564.5	192.05	3832	Road	747597.52	3856765.57	186
3797	Residential	749066.53	3859060.25	193.09	3815	Road	747918.66	3856566.75	191.97	3833	Road	747584.63	3856777.76	186.05
3798	Work	745769.26	3857708.12	197.96	3816	Road	747906.54	3856568.54	191.93	3834	Road	747543.36	3856812.69	185.67

AERMOD Modeling Files

(Electronic Files)

ATTACHMENT E

Equipment Specifications

- Detailed Equipment List
- Steam Generator Specification
- Flare Specification
- Flow Meter Specification
- Emergency Generator Specification
- Miscellaneous Equipment
- Fluid Throughput Measurement
- SG Fuel Use Measurement
- Sulfatreat® Monitoring and Media Replacement procedures
- Gas Flaring Scenarios

Detailed Equipment List

Date: 1/20/16
Rev: E2
COS
EQUIPMENT LIST - Revised for Permit
AERA - FIELD REDEVELOPMENT PROJECT

LEGEND for Plant Processes

COS	Clean Oil Storage	OCP	Oil Cleaning Plant	SCP	Solids Concentration Plant
CPP	Central Plant Processes	Off-Plot	Off-Plot / Fire Water	SGS	Steam Generation Site
GS	Group Station	PGSG	Produced Gas Steam Generation	WCP	Water Cleaning Plant
LOS	Light Oil Storage	PGTP	Produced Gas Treatment Plant	WSP	Water Softening Plant

Feel free to use autofilters. Warning, Performing a sort will sever links to the other sheets!

IDENTIFICATION		DESCRIPTION				EQUIPMENT INFORMATION							
Tag Identifier	Tag Number	Description short	Description Long	Process Grouping	Project Phase (timing)	Process Media	Capacity	Size	Driver Type	Horse power	Ratings (MAWP, Press/Temp, etc.)	Codes	Location
FF	2150	Fin Fan Cooler	COS Stock Oil Cooler	COS	Phase 1	Stock Oil	1.75 MMBTU/hr	-	Motor	15	Design: 150 psig @ 300°F	API 661	CPF
FF	2160	Fin Fan Cooler	COS Stock Oil Cooler	COS	Phase 1	Stock Oil	1.75 MMBTU/hr	-	Motor	15	Design: 150 psig @ 300°F	API 661	CPF
HX	2400	Heat Exchanger	Steam Stock Oil Heating	COS	Phase 1	Stock Oil/Steam	1.5 MMBTU/hr	-	NA	NA	Design SH:300 psig T:150 psig ; 450°F	ASME Sec 8	CPF
L	2250	Meter	1-Bay Truck Loading and Metering Rack	COS	Phase 1	Stock Oil	400 gpm @ 285 psig	-	NA	NA	Design: 285 psig @ 250°F	API 11N	CPF
L	2260	Meter	1-Bay Truck Loading and Metering Rack	COS	Phase 1	Stock Oil	400 gpm @ 285 psig	-	NA	NA	Design: 285 psig @ 250°F	API 11N	CPF
L	2270	Meter	1-Bay Truck Loading and Metering Rack	COS	Phase 1	Stock Oil	400 gpm @ 285 psig	-	NA	NA	Design: 285 psig @ 250°F	API 11N	CPF
P	2210	Pump	Truck LACT Charge Pump	COS	Phase 1	Sales Oil	300 gpm @ 85 psig	-	Motor	20	Design: 85 psig @ 250°F	API 676	CPF
P	2220	Pump	Truck LACT Charge Pump	COS	Phase 1	Sales Oil	300 gpm @ 85 psig	-	Motor	20	Design: 85 psig @ 250°F	API 676	CPF
P	2230	Pump	Truck LACT Charge Pump	COS	Phase 1	Sales Oil	300 gpm @ 85 psig	-	Motor	20	Design: 85 psig @ 250°F	API 676	CPF
P	2340	Pump	COS Bottoms Water Transfer Pump	COS	Phase 1	Produced Water	100 gpm @ 50 psig	-	Motor	5	Design: 50 psig @ 250°F	ANSI B73.1	CPF
P	2350	Pump	COS Bottoms Water Transfer Pump	COS	Phase 1	Produced Water	100 gpm @ 50 psig	-	Motor	5	Design: 50 psig @ 250°F	ANSI B73.1	CPF
P	2410	Pump	COS Tank Heater Circulation Pump	COS	Phase 1	Produced Water	150 gpm @ 85 psig	-	Motor	15	Design: 85 psig @ 250°F	API 676	CPF
P	2420	Pump	COS Tank Heater Circulation Pump	COS	Phase 1	Produced Water	150 gpm @ 85 psig	-	Motor	15	Design: 85 psig @ 250°F	API 676	CPF
T	2170	Tank	COS Stock Oil Storage/ Reject Tank	COS	Phase 1	Stock Oil	10,000 BBL	55'-0" DIA x 24'-0" H	NA	NA	Design: <1 psig @ 250°F	API 650	CPF
FF	2370	Fin Fan Cooler	COS Stock Oil Cooler	COS	Phase 2	Stock Oil	1.75 MMBTU/hr	-	Motor	15	Design: 150 psig @ 300°F	API 661	CPF
FF	2380	Fin Fan Cooler	COS Stock Oil Cooler	COS	Phase 2	Stock Oil	1.75 MMBTU/hr	-	Motor	15	Design: 150 psig @ 300°F	API 661	CPF
L	2280	Meter	1-Bay Truck Loading and Metering Rack	COS	Phase 2	Stock Oil	400 gpm @ 285 psig	-	NA	NA	Design: 285 psig @ 250°F	API 11N	CPF
P	2240	Pump	Truck LACT Charge Pump	COS	Phase 2	Sales Oil	300 gpm @ 85 psig	-	Motor	20	Design: 85 psig @ 250°F	API 676	CPF
P	2310	Pump	Pipeline LACT Charge Pump	COS	Phase 2	Sales Oil	500 gpm @ 130 psig	-	Motor	75	Design: 130 psig @ 250°F	API 676	CPF
P	2320	Pump	Pipeline LACT Charge Pump	COS	Phase 2	Sales Oil	500 gpm @ 130 psig	-	Motor	75	Design: 130 psig @ 250°F	API 676	CPF
T	2180	Tank	COS Stock Oil Storage/ Reject Tank	COS	Phase 2	Stock Oil	10,000 BBL	55'-0" DIA x 24'-0" H	NA	NA	Design: <1 psig @ 250°F	API 650	CPF

Date: 1/20/16
Rev: E2
CPP
EQUIPMENT LIST - Revised for Permit
AERA - FIELD REDEVELOPMENT PROJECT

LEGEND for Plant Processes

COS	Clean Oil Storage	OCP	Oil Cleaning Plant	SCP	Solids Concentration Plant
CPP	Central Plant Processes	Off-Plot	Off-Plot / Fire Water	SGS	Steam Generation Site
GS	Group Station	PGSG	Produced Gas Steam Generation	WCP	Water Cleaning Plant
LOS	Light Oil Storage	PGTP	Produced Gas Treatment Plant	WSP	Water Softening Plant

Feel free to use autofilters. Warning, Performing a sort will sever links to the other sheets!

IDENTIFICATION		DESCRIPTION				EQUIPMENT INFORMATION							
Tag Identifier	Tag Number	Description short	Description Long	Process Grouping	Project Phase (timing)	Process Media	Capacity	Size	Driver Type	Horse power	Ratings (MAWP, Press/Temp, etc.)	Codes	Location
FF	9020	Tank Vapor Fin Fan	COS/LOS Tank Vapor Cooling	CPP	Phase 1	Tank Vapors	0.25 MMBTU/HR	-	Motor	5	Design: 150 psig @ 200°F	API 661	CPF
FF	9030	Tank Vapor Fin Fan	COS/LOS Tank Vapor Cooling	CPP	Phase 1	Tank Vapors	0.25 MMBTU/HR	-	Motor	5	Design: 150 psig @ 200°F	API 661	CPF
FF	9160	Fin Fan Cooler	COS/LOS TVR Skid 1 Aftercooler	CPP	Phase 1	Tank Vapors	0.25 MMBTU/HR	-	Motor	5	Design: 150 psig @ 350°F	API 661	CPF
FF	9250	Tank Vapor Fin Fan	WSP Tank Vapor Cooling	CPP	Phase 1	Tank Vapors	0.25 MMBTU/HR	-	Motor	5	Design: 150 psig @ 200°F	API 661	CPF
FF	9260	Tank Vapor Fin Fan	WSP Tank Vapor Cooling	CPP	Phase 1	Tank Vapors	0.25 MMBTU/HR	-	Motor	5	Design: 150 psig @ 200°F	API 661	CPF
FF	9390	Fin Fan Cooler	WSP TVR Skid 1 Aftercooler	CPP	Phase 1	Tank Vapors	0.25 MMBTU/HR	-	Motor	5	Design: 150 psig @ 350°F	API 661	CPF
G	9640	Generator	Standby Generator	CPP	Phase 1	Power	762 kW	-	0	0	Volts/PH/HZ: 480/3/60 @ 1,200 RPM	0	CPF
K	9100	TVR Compressor	COS/LOS TVR Skid 1 Compressor	CPP	Phase 1	Tank Vapors	0.5 MMSCFD	-	Motor	60	Design: 30 psig / 35 psig	0	CPF
K	9330	TVR Compressor	WSP TVR Skid 1 Compressor	CPP	Phase 1	Tank Vapors	0.5 MMSCFD	-	Motor	60	Design: 30 psig / 35 psig	0	CPF
K	9470	Air Compressor	North Plant Instrument Air Skid 1	CPP	Phase 1	Air	115 ACFM @ 125 psi	-	Motor	30	125 psig @ 100°F	0	CPF
K	9530	Air Compressor	North Plant Instrument Air Skid 2	CPP	Phase 1	Air	115 ACFM @ 125 psi	-	Motor	30	125 psig @ 100°F	0	CPF
K	9660	Air Compressor	South Plant Instrument Air Skid 1	CPP	Phase 1	Air	115 ACFM @ 125 psi	-	Motor	30	125 psig @ 100°F	0	CPF
K	9720	Air Compressor	South Plant Instrument Air Skid 2	CPP	Phase 1	Air	115 ACFM @ 125 psi	-	Motor	30	125 psig @ 100°F	0	CPF
P	9040	TVR Condensate Pump	COS/LOS TVR Scrubber Condensate Pump1	CPP	Phase 1	Tank Vapors	15 gpm @ 40 psig	-	Motor	1.5	Design: 40 psig @ 250°F	ANSI B73.1	CPF
P	9050	TVR Condensate Pump	COS/LOS TVR Scrubber Condensate Pump2	CPP	Phase 1	Tank Vapors	15 gpm @ 40 psig	-	Motor	1.5	Design: 40 psig @ 250°F	ANSI B73.1	CPF
P	9080	TVR Condensate Pump	COS/LOS TVR Skid 1 Scrubber Condensate Pump	CPP	Phase 1	Tank Vapors	15 gpm @ 40 psig	-	Motor	1.5	Design: 40 psig @ 250°F	ANSI B73.1	CPF
P	9140	Lube Oil Pump	COS/LOS TVR Skid 1 Compressor Lube Oil Pump	CPP	Phase 1	Lube Oil	40 psig	-	Motor	0.75	Design: 40 psig @ 250°F	API 676	CPF
P	9180	Jacket Water Pump	COS/LOS TVR Skid 1 Jacket Water Pump	CPP	Phase 1	Water	15 gpm @ 40 psig	-	Motor	1.5	Design: 40 psig @ 250°F	ANSI B73.1	CPF
P	9270	TVR Condensate Pump	WSP TVR Scrubber Condensate Pump1	CPP	Phase 1	Tank Vapors	15 gpm @ 40 psig	-	Motor	1.5	Design: 40 psig @ 250°F	ANSI B73.1	CPF
P	9310	TVR Condensate Pump	WSP TVR Skid 1 Scrubber Condensate Pump	CPP	Phase 1	Tank Vapors	15 gpm @ 40 psig	-	Motor	1.5	Design: 40 psig @ 250°F	ANSI B73.1	CPF
P	9370	Lube Oil Pump	WSP TVR Skid 1 Compressor Lube Oil Pump	CPP	Phase 1	Lube Oil	40 psig	-	Motor	0.75	Design: 40 psig @ 250°F	API 676	CPF
P	9410	Jacket Water Pump	WSP TVR Skid 1 Jacket Water Pump	CPP	Phase 1	Water	15 gpm @ 40 psig	-	Motor	1.5	Design: 40 psig @ 250°F	ANSI B73.1	CPF
P	9570	Pump	Drain Tank Liquids Pump	CPP	Phase 1	Drains	100 gpm @ 70 psig	-	Motor	10	70 psig @ 250°F	ANSI B73.1	CPF
P	9610	Pump	Drain Tank Liquids Pump	CPP	Phase 1	Drains	100 gpm @ 70 psig	-	Motor	10	70 psig @ 250°F	ANSI B73.1	CPF
T	9120	Lube Oil Reservoir	COS/LOS TVR Skid 1 Compressor Lube Oil Reservoir	CPP	Phase 1	Lube Oil	by Vendor	-	NA	NA	by Vendor	ASME Sec 8	CPF
T	9200	Jacket Water Reservoir	COS/LOS TVR Skid 1 Compressor Lube Jacket Water Reservo	CPP	Phase 1	Water	by Vendor	-	NA	NA	by Vendor	ASME Sec 8	CPF
T	9350	Lube Oil Reservoir	WSP TVR Skid 1 Compressor Lube Oil Reservoir	CPP	Phase 1	Lube Oil	by Vendor	-	NA	NA	by Vendor	ASME Sec 8	CPF
T	9430	Jacket Water Reservoir	WSP TVR Skid 1 Compressor Lube Jacket Water Reservoir	CPP	Phase 1	Water	by Vendor	-	NA	NA	by Vendor	ASME Sec 8	CPF
V	9010	TVR Inlet Scrubber	COS/LOS TVR Main Inlet Scrubber	CPP	Phase 1	Tank Vapors	0	16"Dia X 9'-0" SS	NA	NA	Design: 150 psig @ 350°F	ASME Sec 8	CPF
V	9060	Skid Inlet Scrubber	COS/LOS TVR Skid 1 Inlet Scrubber	CPP	Phase 1	Tank Vapors	0	16"Dia X 9'-0" SS	NA	NA	Design: 150 psig @ 350°F	ASME Sec 8	CPF
V	9220	TVR Discharge Scrubber	COS/LOS TVR Skid 1 Discharge Scrubber	CPP	Phase 1	Tank Vapors	0	12'-9" Dia X 8'-6"SS	NA	NA	Design: 150 psig @ 350°F	ASME Sec 8	CPF
V	9240	TVR Inlet Scrubber	WSP TVR Main Inlet Scrubber	CPP	Phase 1	Tank Vapors	0	16"Dia X 9'-0" SS	NA	NA	Design: 150 psig @ 350°F	ASME Sec 8	CPF
V	9290	Skid Inlet Scrubber	WSP TVR Skid 1 Inlet Scrubber	CPP	Phase 1	Tank Vapors	0	16"Dia X 9'-0" SS	NA	NA	Design: 150 psig @ 350°F	ASME Sec 8	CPF
V	9450	TVR Discharge Scrubber	WSP TVR Skid 1 Discharge Scrubber	CPP	Phase 1	Tank Vapors	0	12'-9" Dia X 8'-6"SS	NA	NA	Design: 150 psig @ 350°F	ASME Sec 8	CPF
V	9500	Air Receiver	Instrument Air Receiver	CPP	Phase 1	Air	400 gal	36" dia x 80" s/s	NA	NA	200 psig @ 200°F	ASME Sec 8	CPF
V	9510	Air Dryer	Instrument Air Dryer	CPP	Phase 1	Air	250 ACFM	-	NA	NA	200 psig @ 200°F	ASME Sec 8	CPF
V	9520	Air Dryer	Instrument Air Dryer	CPP	Phase 1	Air	250 ACFM	-	NA	NA	200 psig @ 200°F	ASME Sec 8	CPF
V	9560	Tank	Drain Tank	CPP	Phase 1	Drains	100 BBL	6'-0" DIA x 20'-0" S/S	NA	NA	0	ASME Sec 8	CPF
V	9600	Tank	Drain Tank	CPP	Phase 1	Drains	100 BBL	6'-0" DIA x 20'-0" S/S	NA	NA	0	ASME Sec 8	CPF
V	9690	Air Receiver	Instrument Air Receiver	CPP	Phase 1	Air	400 gal	36" dia x 80" s/s	NA	NA	200 psig @ 200°F	ASME Sec 8	CPF
V	9700	Air Dryer	Instrument Air Dryer	CPP	Phase 1	Air	250 ACFM	-	NA	NA	200 psig @ 200°F	ASME Sec 8	CPF
V	9710	Air Dryer	Instrument Air Dryer	CPP	Phase 1	Air	250 ACFM	-	NA	NA	200 psig @ 200°F	ASME Sec 8	CPF
FF	9170	Fin Fan Cooler	COS/LOS TVR Skid 2 Aftercooler	CPP	Phase 2	Tank Vapors	0.25 MMBTU/HR	-	Motor	5	Design: 150 psig @ 350°F	API 661	CPF
FF	9400	Fin Fan Cooler	WSP TVR Skid 2 Aftercooler	CPP	Phase 2	Tank Vapors	0.25 MMBTU/HR	-	Motor	5	Design: 150 psig @ 350°F	API 661	CPF
K	9110	TVR Compressor	COS/LOS TVR Skid 2 Compressor	CPP	Phase 2	Tank Vapors	0.5 MMSCFD	-	Motor	60	Design: 30 psig / 35 psig	0	CPF
K	9340	TVR Compressor	WSP TVR Skid 2 Compressor	CPP	Phase 2	Tank Vapors	0.5 MMSCFD	-	Motor	60	Design: 30 psig / 35 psig	0	CPF
P	9090	TVR Condensate Pump	COS/LOS TVR Skid 2 Scrubber Condensate Pump	CPP	Phase 2	Tank Vapors	15 gpm @ 40 psig	-	Motor	1.5	Design: 40 psig @ 250°F	ANSI B73.1	CPF
P	9150	Lube Oil Pump	COS/LOSTVR Skid 2 Compressor Lube Oil Pump	CPP	Phase 2	Lube Oil	40 psig	-	Motor	0.75	Design: 40 psig @ 250°F	API 676	CPF
P	9190	Jacket Water Pump	COS/LOS TVR Skid 2 Jacket Water Pump	CPP	Phase 2	Water	15 gpm @ 40 psig	-	Motor	1.5	Design: 40 psig @ 250°F	ANSI B73.1	CPF
P	9280	TVR Condensate Pump	WSP TVR Scrubber Condensate Pump2	CPP	Phase 2	Tank Vapors	15 gpm @ 40 psig	-	Motor	1.5	Design: 40 psig @ 250°F	ANSI B73.1	CPF
P	9320	TVR Condensate Pump	WSP TVR Skid 2 Scrubber Condensate Pump	CPP	Phase 2	Tank Vapors	15 gpm @ 40 psig	-	Motor	1.5	Design: 40 psig @ 250°F	ANSI B73.1	CPF
P	9380	Lube Oil Pump	WSP TVR Skid 2 Compressor Lube Oil Pump	CPP	Phase 2	Lube Oil	40 psig	-	Motor	0.75	Design: 40 psig @ 250°F	API 676	CPF
P	9420	Jacket Water Pump	WSP TVR Skid 2 Jacket Water Pump	CPP	Phase 2	Water	15 gpm @ 40 psig	-	Motor	1.5	Design: 40 psig @ 250°F	ANSI B73.1	CPF
P	9580	Pump	Drain Tank Liquids Pump	CPP	Phase 2	Drains	100 gpm @ 70 psig	-	Motor	10	70 psig @ 250°F	ANSI B73.1	CPF
P	9590	Pump	Drain Tank Containment Pump	CPP	Phase 2	Drains	20 gpm @ 10 psig	-	Motor	1	0	ASME Sec 8	CPF
P	9620	Pump	Drain Tank Liquids Pump	CPP	Phase 2	Drains	100 gpm @ 70 psig	-	Motor	5	70 psig @ 250°F	ANSI B73.1	CPF
P	9630	Pump	Drain Tank Containment Pump	CPP	Phase 2	Drains	20 gpm @ 10 psig	-	Motor	1	0	ASME Sec 8	CPF
T	9130	Lube Oil Reservoir	COS/LOS TVR Skid 2 Compressor Lube Oil Reservoir	CPP	Phase 2	Lube Oil	by Vendor	-	NA	NA	by Vendor	ASME Sec 8	CPF
T	9210	Jacket Water Reservoir	COS/LOS TVR Skid 2 Compressor Lube Jacket Water Reservo	CPP	Phase 2	Water	by Vendor	-	NA	NA	by Vendor	ASME Sec 8	CPF
T	9360	Lube Oil Reservoir	WSP TVR Skid 2 Compressor Lube Oil Reservoir	CPP	Phase 2	Lube Oil	by Vendor	-	NA	NA	by Vendor	ASME Sec 8	CPF
T	9440	Jacket Water Reservoir	WSP TVR Skid 2 Compressor Lube Jacket Water Reservoir	CPP	Phase 2	Water	by Vendor	-	NA	NA	by Vendor	ASME Sec 8	CPF
V	9070	Skid Inlet Scrubber	COS/LOSP TVR Skid 2 Inlet Scrubber	CPP	Phase 2	Tank Vapors	0	16"Dia X 9'-0" SS	NA	NA	Design: 150 psig @ 350°F	ASME Sec 8	CPF
V	9230	TVR Discharge Scrubber	COS/LOS TVR Skid 1 Discharge Scrubber	CPP	Phase 2	Tank Vapors	0	12'-9" Dia X 8'-6"SS	NA	NA	Design: 150 psig @ 350°F	ASME Sec 8	CPF
V	9300	Skid Inlet Scrubber	WSP TVR Skid 2 Inlet Scrubber	CPP	Phase 2	Tank Vapors	0	16"Dia X 9'-0" SS	NA	NA	Design: 150 psig @ 350°F	ASME Sec 8	CPF
V	9460	TVR Discharge Scrubber	WSP TVR Skid 2 Discharge Scrubber	CPP	Phase 2	Tank Vapors	0	12'-9" Dia X 8'-6"SS	NA	NA	Design: 150 psig @ 350°F	ASME Sec 8	CPF

Date: 1/20/16
Rev: E2
GS
EQUIPMENT LIST - Revised for Permit
AERA - FIELD REDEVELOPMENT PROJECT

LEGEND for Plant Processes

COS	Clean Oil Storage	OCP	Oil Cleaning Plant	SCP	Solids Concentration Plant
CPP	Central Plant Processes	Off-Plot	Off-Plot / Fire Water	SGS	Steam Generation Site
GS	Group Station	PGSG	Produced Gas Steam Generation	WCP	Water Cleaning Plant
LOS	Light Oil Storage	PGTP	Produced Gas Treatment Plant	WSP	Water Softening Plant

Feel free to use autofilters. Warning, Performing a sort will sever links to the other sheets!

IDENTIFICATION		DESCRIPTION				EQUIPMENT INFORMATION							
Tag Identifier	Tag Number	Description short	Description Long	Process Grouping	Project Phase (timing)	Process Media	Capacity	Size	Driver Type	Horse power	Ratings (MAWP, Press/Temp, etc.)	Codes	Location
V	1010	De-gassing Vessel	Group Station Prod Trn 1 De-gassing Vessel	GS	Phase 1	Emulsion	25,000 BPD	8'-0" DIA x 30'-0" (SS)	NA	NA	Design: 300 psig @ 400F, Op: 25 psig @ 260F	ASME Sec 8	GS
V	1190	Air Receiver	Group Station Instrument Air Receiver	GS	Phase 1	Air	200 Gal	2'-6" DIA x 6'-0" (SS)	NA	NA	Design: 200 psig @ 200F, Op: 125 psig @ 100F	ASME Sec 8	GS
V	1210	De-gassing Vessel	Group Station Prod Trn 2 De-gassing Vessel	GS	Phase 2	Emulsion	25,000 BPD	8'-0" DIA x 30'-0" (SS)	NA	NA	Design: 300 psig @ 400F, Op: 25 psig @ 260F	ASME Sec 8	GS

Date: 1/20/16
Rev: E2
LOS
EQUIPMENT LIST - Revised for Permit
AERA - FIELD REDEVELOPMENT PROJECT

LEGEND for Plant Processes

COS	Clean Oil Storage	OCP	Oil Cleaning Plant	SCP	Solids Concentration Plant
CPP	Central Plant Processes	Off-Plot	Off-Plot / Fire Water	SGS	Steam Generation Site
GS	Group Station	PGSG	Produced Gas Steam Generation	WCP	Water Cleaning Plant
LOS	Light Oil Storage	PGTP	Produced Gas Treatment Plant	WSP	Water Softening Plant

Feel free to use autofilters. Warning, Performing a sort will sever links to the other sheets!

IDENTIFICATION		DESCRIPTION				EQUIPMENT INFORMATION							
Tag Identifier	Tag Number	Description short	Description Long	Process Grouping	Project Phase (timing)	Process Media	Capacity	Size	Driver Type	Horse power	Ratings (MAWP, Press/Temp, etc.)	Codes	Location
L	2130	Meter	1-Bay Metering and Unloading Rack	LOS	Phase 1	Light Crude	4" meter- 400 GPM	-	NA	NA	Design: 285 psig @ 250°F	API 11N	CPF
P	2010	Pump	LCO Truck Unloading Pump	LOS	Phase 1	Light Crude	300 gpm @ 50 psig	-	Motor	15	Design: 50 psig @ 250°F	API 676	CPF
P	2020	Pump	LCO Truck Unloading Pump	LOS	Phase 1	Light Crude	300 gpm @ 50 psig	-	Motor	15	Design: 50 psig @ 250°F	API 676	CPF
P	2070	Pump	LCO Treating Blend Pump	LOS	Phase 1	Light Crude	100 gpm @ 85 psig	-	VFD	10	Design: 85 psig @ 250°F	API 676	CPF
P	2080	Pump	LCO Treating Blend Pump	LOS	Phase 1	Light Crude	100 gpm @ 85 psig	-	VFD	10	Design: 85 psig @ 250°F	API 676	CPF
P	2360	Pump	LCO Bottoms Water Pump	LOS	Phase 1	Produced Water	100 gpm @ 50psig	-	Motor	5	Design: 50 psig @ 250°F	ANSI B73.1	CPF
P	2370	Pump	LCO Bottoms Water Pump	LOS	Phase 1	Produced Water	100 gpm @ 50psig	-	Motor	5	Design: 50 psig @ 250°F	ANSI B73.1	CPF
T	2040	Tank	LCO Storage Tank	LOS	Phase 1	Light Crude	6,500 BBL	44'-0" DIA x 24'-0" H	NA	NA	Design: <1 psig @ 250°F	API 650	CPF
L	2140	Meter	1-Bay Metering and Unloading Rack	LOS	Phase 2	Light Crude	4" meter- 400 GPM	-	NA	NA	Design: 285 psig @ 250°F	API 11N	CPF
P	2030	Pump	LCO Truck Unloading Pump	LOS	Phase 2	Light Crude	300 gpm @ 50 psig	-	Motor	15	Design: 50 psig @ 250°F	API 676	CPF
P	2110	Pump	Pipeline Blend Pump	LOS	Phase 2	Light Crude	200 gpm @130 psig	-	VFD	20	Design: 130 psig @ 250°F	API 676	CPF
P	2120	Pump	Pipeline Blend Pump	LOS	Phase 2	Light Crude	200 gpm @130 psig	-	VFD	20	Design: 130 psig @ 250°F	API 676	CPF
T	2050	Tank	LCO Storage Tank	LOS	Phase 2	Light Crude	6,500 BBL	44'-0" DIA x 24'-0" H	NA	NA	Design: <1 psig @ 250°F	API 650	CPF

Date: 1/20/16
Rev: E2
OCP
EQUIPMENT LIST - Revised for Permit
AERA - FIELD REDEVELOPMENT PROJECT

LEGEND for Plant Processes

COS	Clean Oil Storage	OCP	Oil Cleaning Plant	SCP	Solids Concentration Plant
CPP	Central Plant Processes	Off-Plot	Off-Plot / Fire Water	SGS	Steam Generation Site
GS	Group Station	PGSG	Produced Gas Steam Generation	WCP	Water Cleaning Plant
LOS	Light Oil Storage	PGTP	Produced Gas Treatment Plant	WSP	Water Softening Plant

Feel free to use autofilters. Warning, Performing a sort will sever links to the other sheets!

IDENTIFICATION		DESCRIPTION				EQUIPMENT INFORMATION							
Tag Identifier	Tag Number	Description short	Description Long	Process Grouping	Project Phase (timing)	Process Media	Capacity	Size	Driver Type	Horse power	Ratings (MAWP, Press/Temp, etc.)	Codes	Location
FF	1510	OCP Vapor Fin Fan	OCP Tank Vapor Cooler	OCP	Phase 1	Tank Vapors	0.2 MMBTU/HR	-	Motor	5	Design: 150 psig @ 200°F	API 661	GS
FF	1650	Fin Fan Cooler	OCP TVR Skid 1 Aftercooler	OCP	Phase 1	Tank Vapors	1.02 MMBTU/HR	-	Motor	10	Design: 150 psig @ 350°F	API 661	CPF
FF	9800	Fin Fan Cooler	Heat Medium Trim Cooler	OCP	Phase 1	Heat Medium	11.3 MMBTU/hr	16'-0" x 14'-0"	Motor	25	250 psig @ 250°F	API 661	CPF
FF	9810	Fin Fan Cooler	Heat Medium Trim Cooler	OCP	Phase 1	Heat Medium	11.3 MMBTU/hr	16'-0" x 14'-0"	Motor	10	150 psig @ 350°F	API 661	CPF
HX	1050	Emulsion/Steam Heat Exchanger	Emulsion S/T Pre-Heat Exchanger Train 1	OCP	Phase 1	Emulsion	5.5 MMBTU/hr	-	NA	NA	Design SH:300 psig T:300 psig ;450°F	ASME Sec 8	CPF
HX	1080	Gas/Heating Media Heat Exchanger	Produced Gas Cooler Train 1	OCP	Phase 1	Produced Gas	10.0 MMBTU/hr	-	NA	NA	Design SH:300 psig T:150 psig ;300°F	ASME Sec 8	GS
HX	1090	Emulsion/Heating Media Heat Exchanger	Treated Oil Cooler Train 1	OCP	Phase 1	Emulsion	4.0 MBTU/hr	-	NA	NA	Design SH:300 psig T:150 psig ;300°F	ASME Sec 8	CPF
HX	1100	Water/Heating Media Heat Exchanger	Produced Water Cooler Train 1	OCP	Phase 1	Produced Water	27.3 MMBTU/hr	-	NA	NA	Design SH:300 psig T:150 psig ;300°F	ASME Sec 8	CPF
HX	1110	LCO/Steam Heat Exchanger	LCO S/T Heat Exchanger (Steam) Train 1	OCP	Phase 1	Light Crude	1.0 MMBTU/hr	-	NA	NA	Design SH:300 psig T:150 psig ; 450°F	ASME Sec 8	CPF
HX	1120	LCO/Heating media Heat Exchanger	LCO S/T Heater Exchanger (heat medium) Train 1	OCP	Phase 1	Light Crude	1.5 MMBTU/hr	-	NA	NA	Design SH:300 psig T:150 psig ;300°F	ASME Sec 8	CPF
K	1590	TVR Compressor	OCP TVR Skid 1 Compressor	OCP	Phase 1	Tank Vapors	0.7 MMSCFD	-	Motor	150	Design: 100 psig / 100 psig	0	GS
P	1530	TVR Condensate Pump	OCP TVR Scrubber Condensate Pump1	OCP	Phase 1	Tank Vapors	15 gpm @ 40 psig	-	Motor	1.5	Design: 40 psig @ 250°F	ANSI B73.1	CPF
P	1570	TVR Condensate Pump	OCP TVR Skid 1 Scrubber Condensate Pump	OCP	Phase 1	Tank Vapors	15 gpm @ 40 psig	-	Motor	1.5	Design: 40 psig @ 250°F	ANSI B73.1	CPF
P	1630	Lube Oil Pump	OCP TVR Skid 1 Compressor Lube Oil Pump	OCP	Phase 1	Lube Oil	40 psig	-	Motor	5	Design: 150 psig @ 250°F	ANSI B73.1	CPF
P	1670	Jacket Water Pump	OCP TVR Skid 1 Jacket Water Pump	OCP	Phase 1	Water	15 gpm @ 40 psig	-	Motor	1.5	Design: 40 psig @ 250°F	ANSI B73.1	CPF
P	9830	Pump	Heat Medium Circulation Pump	OCP	Phase 1	Heat Medium	920gpm @ 240psi	-	Motor	250	0	ANSI B73.1	CPF
P	9840	Pump	Heat Medium Circulation Pump	OCP	Phase 1	Heat Medium	920gpm @ 240psi	-	Motor	250	0	ANSI B73.1	CPF
T	1610	Lube Oil Reservoir	OCP TVR Skid 1 Compressor Lube Oil Reservoir	OCP	Phase 1	Lube Oil	by Vendor	-	NA	NA	by Vendor	ASME Sec 8	CPF
T	9860	Tank	Heat Medium Storage Tank	OCP	Phase 1	Heat Medium	750 BBL	15'-6" DIA x 24'-0"	NA	NA	Design: <1 psig @ 250°F	API 650	CPF
V	1020	Desanding Vessel	Production De-Sanding & De-Gassing Train 1	OCP	Phase 1	Production	25,000 BPD	8'-0" DIA x 16'-0" S/S	NA	NA	Design: 200 psig @ 350F, Op: 55 psig @ 260F	ASME Sec 8	CPF
V	1030	Desanding Vessel	Production De-Sanding & De-Gassing Train 1	OCP	Phase 1	Production	25,000 BPD	8'-0" DIA x 16'-0" S/S	NA	NA	Design: 200 psig @ 350F, Op: 55 psig @ 260F	ASME Sec 8	CPF
V	1040	FWKO	Free-Water Knockout Horiz Vessel Train 1	OCP	Phase 1	Production	25,000 BPD	12'-0" DIA x 60'-0" S/S	NA	NA	Design: 125 psig @ 350F, Op: 45 psig @ 260F	ASME Sec 8	CPF
V	1060	Electrostatic Coalescer	Electrostatic Coalescer Horiz Vessel Train 1	OCP	Phase 1	Emulsion	10,000 BPD	12'-0" DIA x 60'-0" S/S	NA	NA	Design: 125 psig @ 350F/ Op: 35 psig @ 260F	ASME Sec 8	CPF
V	1070	Scrubber	Produced Gas Scrubber Train 1	OCP	Phase 1	Produced Gas	5.0 MMSCFD	3'-6" DIA x 12'-0" S/S	NA	NA	Design: 125 psig @ 350F/ Op: 25 psig @ 260F	ASME Sec 8	CPF
V	1500	OCP TVR Scrubber	OCP TVR Main Inlet Scrubber	OCP	Phase 1	Tank Vapors	0	36"Dia X 12'-0" SS	NA	NA	Design: 150 psig @ 350°F	ASME Sec 8	CPF
V	1550	TVR Inlet Scrubber	OCP TVR Skid 1 Inlet Scrubber	OCP	Phase 1	Tank Vapors	0	36"Dia X 12'-0" SS	NA	NA	Design: 150 psig @ 350°F	ASME Sec 8	GS
V	1690	Jacket Water Reservoir	OCP TVR Skid 1 Compressor Lube Jacket Water Reservoir	OCP	Phase 1	Water	by Vendor	-	NA	NA	by Vendor	ASME Sec 8	CPF
V	1710	TVR Discharge Scrubber	TVR Skid 1 Discharge Scrubber	OCP	Phase 1	Tank Vapors	0	24"Dia X 9'-0"SS	NA	NA	Design: 150 psig @ 350°F	ASME Sec 8	CPF
V	9820	Vessel	Heat Medium Expansion Vessel	OCP	Phase 1	Heat Medium	50 BBL	5'-0" DIA x 15'-0" S/S	Motor	250	0	ASME Sec 8	CPF
FF	1520	OCP Vapor Fin Fan	OCP Tank Vapor Cooler	OCP	Phase 2	Tank Vapors	0.2 MMBTU/HR	-	Motor	5	Design: 150 psig @ 200°F	API 661	GS
FF	1660	Fin Fan Cooler	OCP TVR Skid 2 Aftercooler	OCP	Phase 2	Tank Vapors	1.02 MMBTU/HR	-	Motor	10	Design: 150 psig @ 350°F	API 661	CPF
FF	9900	Fin Fan Cooler	Heat Medium Trim Cooler	OCP	Phase 2	Heat Medium	11.3 MMBTU/hr	16'-0" x 14'-0"	Motor	25	250 psig @ 250°F	API 661	CPF
FF	9910	Fin Fan Cooler	Heat Medium Trim Cooler	OCP	Phase 2	Heat Medium	11.3 MMBTU/hr	16'-0" x 14'-0"	Motor	40	150 psig @ 350°F	API 661	CPF
HX	1250	Emulsion/Steam Heat Exchanger	Emulsion S/T Pre-Heat Exchanger Train 2	OCP	Phase 2	Emulsion	5.5 MMBTU/hr	-	NA	NA	Design SH:300 psig T:300 psig ;450°F	ASME Sec 8	CPF
HX	1280	Gas/Heating Media Heat Exchanger	Produced Gas Cooler Train 2	OCP	Phase 2	Produced Gas	10.0 MMBTU/hr	-	NA	NA	Design SH:300 psig T:150 psig ;300°F	ASME Sec 8	GS
HX	1290	Emulsion/Heating Media Heat Exchanger	Treated Oil Cooler Train 2	OCP	Phase 2	Emulsion	4.0 MBTU/hr	-	NA	NA	Design SH:300 psig T:150 psig ;300°F	ASME Sec 8	CPF
HX	1300	Water/Heating Media Heat Exchanger	Produced Water Cooler Train 2	OCP	Phase 2	Produced Water	27.3 MMBTU/hr	-	NA	NA	Design SH:300 psig T:150 psig ;300°F	ASME Sec 8	CPF
HX	1310	LCO/Steam Heat Exchanger	LCO S/T Heat Exchanger (Steam) Train 2	OCP	Phase 2	Light Crude	1.0 MMBTU/hr	-	NA	NA	Design SH:300 psig T:300 psig ; 450°F	ASME Sec 8	CPF
HX	1320	LCO/Heating media Heat Exchanger	LCO S/T Heater Exchanger (heat medium) Train 2	OCP	Phase 2	Light Crude	1.5 MMBTU/hr	-	NA	NA	Design SH:300 psig T:150 psig ;300°F	ASME Sec 8	CPF
K	1600	TVR Compressor	OCP TVR Skid 2 Compressor	OCP	Phase 2	Tank Vapors	0.7 MMSCFD	-	Motor	150	Design: 100 psig / 100 psig	0	GS
P	1540	TVR Condensate Pump	OCP TVR Scrubber Condensate Pump2	OCP	Phase 2	Tank Vapors	15 gpm @ 40 psig	-	Motor	1.5	Design: 40 psig @ 250°F	ANSI B73.1	CPF
P	1580	TVR Condensate Pump	OCP TVR Skid 2 Scrubber Condensate Pump	OCP	Phase 2	Tank Vapors	15 gpm @ 40 psig	-	Motor	1.5	Design: 40 psig @ 250°F	ANSI B73.1	CPF
P	1640	Lube Oil Pump	OCP TVR Skid 2 Compressor Lube Oil Pump	OCP	Phase 2	Lube Oil	40 psig	-	Motor	5	Design: 150 psig @ 250°F	ANSI B73.1	CPF
P	1680	Jacket Water Pump	OCP TVR Skid 2 Jacket Water Pump	OCP	Phase 2	Water	15 gpm @ 40 psig	-	Motor	1.5	Design: 40 psig @ 250°F	ANSI B73.1	CPF
P	9930	Pump	Heat Medium Circulation Pump	OCP	Phase 2	Heat Medium	920gpm @ 240psi	-	Motor	250	0	ANSI B73.1	CPF
P	9940	Pump	Heat Medium Circulation Pump	OCP	Phase 2	Heat Medium	920gpm @ 240psi	-	Motor	250	0	ANSI B73.1	CPF
T	1620	Lube Oil Reservoir	OCP TVR Skid 2 Compressor Lube Oil Reservoir	OCP	Phase 2	Lube Oil	by Vendor	-	NA	NA	by Vendor	ASME Sec 8	CPF
T	9960	Tank	Heat Medium Storage Tank	OCP	Phase 2	Heat Medium	750 BBL	15'-6" DIA x 24'-0"	NA	NA	Design: <1 psig @ 250°F	API 650	CPF
V	1220	Desanding Vessel	Production De-Sanding & De-Gassing Train 2	OCP	Phase 2	Production	25,000 BPD	8'-0" DIA x 16'-0" S/S	NA	NA	Design: 200 psig @ 350F, Op: 55 psig @ 260F	ASME Sec 8	CPF
V	1230	Desanding Vessel	Production De-Sanding & De-Gassing Train 2	OCP	Phase 2	Production	25,000 BPD	8'-0" DIA x 16'-0" S/S	NA	NA	Design: 200 psig @ 350F, Op: 55 psig @ 260F	ASME Sec 8	CPF
V	1240	FWKO	Free-Water Knockout Horiz Vessel Train 2	OCP	Phase 2	Production	25,000 BPD	12'-0" DIA x 60'-0" S/S	NA	NA	Design: 125 psig @ 350F, Op: 45 psig @ 260F	ASME Sec 8	CPF
V	1260	Electrostatic Coalescer	Electrostatic Coalescer Horiz Vessel Train 2	OCP	Phase 2	Emulsion	10,000 BPD	12'-0" DIA x 60'-0" S/S	NA	NA	Design: 125 psig @ 350F/ Op: 35 psig @ 260F	ASME Sec 8	CPF
V	1270	Scrubber	Produced Gas Scrubber Train 2	OCP	Phase 2	Produced Gas	5.0 MMSCFD	3'-6" DIA x 12'-0" S/S	NA	NA	Design: 125 psig @ 350F/ Op: 25 psig @ 260F	ASME Sec 8	CPF
V	1560	TVR Inlet Scrubber	OCP TVR Skid 2 Inlet Scrubber	OCP	Phase 2	Tank Vapors	0	36"Dia X 12'-0" SS	NA	NA	Design: 150 psig @ 350°F	ASME Sec 8	GS
V	1700	Jacket Water Reservoir	OCP TVR Skid 2 Compressor Lube Jacket Water Reservoir	OCP	Phase 2	Water	by Vendor	-	NA	NA	by Vendor	ASME Sec 8	CPF
V	1720	TVR Discharge Scrubber	TVR Skid 1 Discharge Scrubber	OCP	Phase 2	Tank Vapors	0	24"Dia X 9'-0"SS	NA	NA	Design: 150 psig @ 350°F	ASME Sec 8	CPF
V	9920	Vessel	Heat Medium Expansion Vessel	OCP	Phase 2	Heat Medium	50 BBL	5'-0" DIA x 15'-0" S/S	Motor	250	0	ASME Sec 8	CPF

Date: 1/20/16
Rev: E2
Off-Plot
EQUIPMENT LIST - Revised for Permit
AERA - FIELD REDEVELOPMENT PROJECT

LEGEND for Plant Processes

COS	Clean Oil Storage	OCP	Oil Cleaning Plant	SCP	Solids Concentration Plant
CPP	Central Plant Processes	Off-Plot	Off-Plot / Fire Water	SGS	Steam Generation Site
GS	Group Station	PGSG	Produced Gas Steam Generation	WCP	Water Cleaning Plant
LOS	Light Oil Storage	PGTP	Produced Gas Treatment Plant	WSP	Water Softening Plant

Feel free to use autofilters. Warning, Performing a sort will sever links to the other sheets!

IDENTIFICATION		DESCRIPTION				EQUIPMENT INFORMATION							
Tag Identifier	Tag Number	Description short	Description Long	Process Grouping	Project Phase (timing)	Process Media	Capacity	Size	Driver Type	Horse power	Ratings (MAWP, Press/Temp, etc.)	Codes	Location
T	9650	Tank	Fire/Utility Water Storage Tank	Off-Plot	Phase 1	Fresh Water	3,000 BBL	29'-9" DIA x 24'-0"	NA	NA	<1 psig @ 210°F	API 12B	CPF

Date: 1/20/16
Rev: E2
PGSG
EQUIPMENT LIST - Revised for Permit
AERA - FIELD REDEVELOPMENT PROJECT

LEGEND for Plant Processes

COS	Clean Oil Storage	OCP	Oil Cleaning Plant	SCP	Solids Concentration Plant
CPP	Central Plant Processes	Off-Plot	Off-Plot / Fire Water	SGS	Steam Generation Site
GS	Group Station	PGSG	Produced Gas Steam Generation	WCP	Water Cleaning Plant
LOS	Light Oil Storage	PGTP	Produced Gas Treatment Plant	WSP	Water Softening Plant

Feel free to use autofilters. Warning, Performing a sort will sever links to the other sheets!

IDENTIFICATION		DESCRIPTION				EQUIPMENT INFORMATION							
Tag Identifier	Tag Number	Description short	Description Long	Process Grouping	Project Phase (timing)	Process Media	Capacity	Size	Driver Type	Horse power	Ratings (MAWP, Press/Temp, etc.)	Codes	Location
P	6010	Pump	Feedwater Pump	PGSG	Phase 1	Water	3,200 BPD @ 2,600 psig	-	VFD	250	2,600 psig @ 200°F	API 674	SGS
SG	6030	Steam Generator	OTSG - 62.5 MMBTU/hr	PGSG	Phase 1	Steam	62.5 MMBTU/hr	-	VFD	125	2,600 psig @ 675°F	ASME Sec1	SGS
V	6040	Separator	Steam-Liquid Separator	PGSG	Phase 1	Steam	4000 BSPD	48" DIA x 12'-0"	NA	NA	2,600 psig @ 675°F	ASME Sec 8	SGS
V	6050	Separator	Fuel Gas Scrubber	PGSG	Phase 1	Fuel Gas	2.0 MMSCFD	8.625" DIA x 6'-6"	NA	NA	285 psig @ 150°F	ASME Sec 8	SGS
BL	6220	Blower	WESP ID Fan	PGSG	Phase 2	Air	30,000 SCFM	-	Motor	75	Temp 200°F	0	SGS
BL	6250	Blower	WESP Air Blower	PGSG	Phase 2	Air	0	-	VFD	2	0	0	SGS
HX	6240	Air Heater	WESP Air Heater	PGSG	Phase 2	Air	92.2 MMBTU/Hr	-	Motor	27 kW	0	0	SGS
P	6120	Pump	SO2 Primary Recycle Pump	PGSG	Phase 2	SO2 Waste	860 gpm @ 100FT TDH	4" X 6" -13, IMP 10.625"	Motor	50	50 psig @ 250°F	ANSI B73.1	SGS
P	6130	Pump	SO2 Primary Recycle Pump	PGSG	Phase 2	SO2 Waste	860 gpm @ 100FT TDH	4" X 6" -13, IMP 10.625"	Motor	50	50 psig @ 250°F	ANSI B73.1	SGS
P	6150	Pump	SO2 Secondary Recycle Pump	PGSG	Phase 2	SO2 Waste	360 gpm @ 100 FT TDH	2" x 3" - 13, IMP 11.000"	Motor	20	50 psig @ 250°F	ANSI B73.1	SGS
P	6160	Pump	SO2 Secondary Recycle Pump	PGSG	Phase 2	SO2 Waste	360 gpm @ 100 FT TDH	2" x 3" - 13, IMP 11.000"	Motor	20	50 psig @ 250°F	ANSI B73.1	SGS
P	6270	Pump	SO2/WESP 25% Caustic Pump	PGSG	Phase 2	Caustic	40 gpm @ 300 ft	1" x 1.5"-8, 6.875 Imp	Motor	15	130 psig @ 170°F	API 675	SGS
P	6280	Pump	SO2/WESP 25% Caustic Pump	PGSG	Phase 2	Caustic	40 gpm @ 300 ft	1" x 1.5"-8, 6.875 Imp	Motor	15	130 psig @ 170°F	API 675	SGS
P	6300	Pump	WESP 1% Caustic Pump	PGSG	Phase 2	Caustic	5 gpm @ 320 ft	1 SV-12 Stage	VFD	1.5	140 psig @ 170°F	API 675	SGS
P	6310	Pump	WESP 1% Caustic Pump	PGSG	Phase 2	Caustic	5 gpm @ 320 ft	1 SV-12 Stage	VFD	1.5	140 psig @ 170°F	API 675	SGS
P	6330	Pump	SO2/WESP Waste Tank Pumps	PGSG	Phase 2	SO2/WESP Waste	45 gpm @ 80FT	1" x 1.5"-6, 4.375 Imp	Motor	5	20 psig @ 170°F	ANSI B73.1	SGS
P	6340	Pump	SO2/WESP Waste Tank Pumps	PGSG	Phase 2	SO2/WESP Waste	45 gpm @ 80FT	1" x 1.5"-6, 4.375 Imp	Motor	5	20 psig @ 170°F	ANSI B73.1	SGS
T	6260	Tank	SO2/WESP 25% Caustic Tank	PGSG	Phase 2	Caustic	750 BBL	15'-6" DIA x 24'-0"	NA	NA	<1 psig; 200°F	API 12 F	SGS
T	6290	Tank	WESP 1% Caustic Tank	PGSG	Phase 2	Caustic	90 BBL	7'-11" DIA x 10'-0"	NA	NA	<1 psig; 200°F	API 12 F	SGS
T	6320	Tank	SO2/ Waste Tank	PGSG	Phase 2	SO2/WESP Waste	300 BBL	12'-0" DIA x 15'	NA	NA	<1 psig; 200°F	API 12 F	SGS
V	6110	Vessel	SO2 Primary Absorber	PGSG	Phase 2	Sour Flue Gas	282 BBL	8'-6" DIA x 31'-6" OAH	NA	NA	12psig/-5.6osi; 500°F/-20°F	ASME Sec 8	SGS
V	6140	Vessel	SO2 Secondary Absorber	PGSG	Phase 2	Sour Flue Gas	282 BBL	8'-6" DIA x 31'-6" OAH	NA	NA	12psig/-5.6osi; 500°F/-20°F	ASME Sec 8	SGS
V	6210	Vessel	WESP	PGSG	Phase 2	Flue Gas	1,500 MCFD	12'-0" DIA x 36'-10.5" OAH	NA	NA	0	ASME Sec 8	SGS
V	6230	Vessel	WESP Vent Stack	PGSG	Phase 2	Flue Gas	89.5 BBL	4'-0" DIA x 40'-0" OAH	Motor	5	Atmospheric; 200°F	0	SGS

Date: 1/20/16
Rev: E2
PGTP
EQUIPMENT LIST - Revised for Permit
AERA - FIELD REDEVELOPMENT PROJECT

LEGEND for Plant Processes

COS	Clean Oil Storage	OCP	Oil Cleaning Plant	SCP	Solids Concentration Plant
CPP	Central Plant Processes	Off-Plot	Off-Plot / Fire Water	SGS	Steam Generation Site
GS	Group Station	PGSG	Produced Gas Steam Generation	WCP	Water Cleaning Plant
LOS	Light Oil Storage	PGTP	Produced Gas Treatment Plant	WSP	Water Softening Plant

Feel free to use autofilters. Warning, Performing a sort will sever links to the other sheets!

IDENTIFICATION		DESCRIPTION				EQUIPMENT INFORMATION							
Tag Identifier	Tag Number	Description short	Description Long	Process Grouping	Project Phase (timing)	Process Media	Capacity	Size	Driver Type	Horse power	Ratings (MAWP, Press/Temp, etc.)	Codes	Location
F	5910	Flare	Emergency Flare	PGTP	Phase 1	Reliefs	40.0 MMBTU/Hr	7'-0" DIA x 40'-0" Ht	NA	NA	0	0	GS
FF	5020	Fin Fan Cooler	Produced Gas Cooler	PGTP	Phase 1	Prod. Gas	0.4 MMBTU/hr	-	Motor	7.5	150 psig @ 350°F	API 661	GS
FF	5030	Fin Fan Cooler	Produced Gas Cooler	PGTP	Phase 1	Prod. Gas	0.4 MMBTU/hr	-	Motor	7.5	150 psig @ 350°F	API 661	GS
P	5890	Pump	Flare KO Condensate Pump	PGTP	Phase 1	Condensate	50 gpm @ 40 psig	-	Motor	3	40 psig @ 250°F	ANSI B73.1	GS
P	5900	Pump	Flare KO Condensate Pump	PGTP	Phase 1	Condensate	50 gpm @ 40 psig	-	Motor	3	40 psig @ 250°F	ANSI B73.1	GS
P	5980	Pump	Sweet Gas Scrubber Condensate Pump	PGTP	Phase 1	Condensate	15 gpm @ 40 psig	-	Motor	1.5	40 psig @ 250°F	ANSI B73.1	GS
P	5990	Pump	Sweet Gas Scrubber Condensate Pump	PGTP	Phase 1	Condensate	15 gpm @ 40 psig	-	Motor	1.5	40 psig @ 250°F	ANSI B73.1	GS
V	5010	Vessel	Warm Gas Scrubber	PGTP	Phase 1	Prod. Gas	1.5 MMSCFD	3'-0" DIA x 15'-0" s/s	NA	NA	150 psig @ 350°F	ASME Sec 8	GS
V	5040	Vessel	Cooled Gas Scrubber	PGTP	Phase 1	Prod. Gas	2.5 MMSCFD	2'-6" DIA x 10'-0" s/s	NA	NA	150 psig @ 350°F	ASME Sec 8	GS
V	5660	Vessel	H2S Scavenger 2	PGTP	Phase 1	Produced Gas	2.0 MMSCFD	12'-0" DIA x 30'-0" s/s	NA	NA	150 psig @ 250°F	ASME Sec 8	GS
V	5670	Vessel	H2S Scavenger 1	PGTP	Phase 1	Produced Gas	2.0 MMSCFD	12'-0" DIA x 30'-0" s/s	NA	NA	150 psig @ 250°F	ASME Sec 8	GS
V	5880	Vessel	Flare KO Vessel	PGTP	Phase 1	Reliefs	2.0 MMSCFD	5'-0" DIA x 15'-0" s/s	NA	NA	150 psig @ 350°F	ASME Sec 8	GS
V	5970	Vessel	Sweet Produced Gas Scrubber	PGTP	Phase 1	Sweet Gas	2.0 MMSCFD	3'-0" DIA x 9'-0" s/s	NA	NA	150 psig @ 350°F	ASME Sec 8	GS
F	5810	Filter	SFX Sulfur Filter	PGTP	Phase 2	SFX Slurry	85 gpm	by vendor	Motor	-	by vendor	0	GS
F	5870	Filter	SFX Sulfur Filter	PGTP	Phase 2	SFX Slurry	85 gpm	by vendor	Motor	-	by vendor	0	GS
FF	5630	Fin Fan Cooler	SFX Regeneration Air Cooler	PGTP	Phase 2	Air	0.08 MMBTU/hr	-	VFD	5	30 psig @ 400°F	API 661	GS
HX	5520	Heat Exchanger	SFX Water Wash S/T Heater	PGTP	Phase 2	Water	0.82MMBTU/hr	-	NA	NA	Design SH:150 psig T:150 psig ; 350°F	ASME Sec 8	GS
HX	5710	Exchanger	SFX Heat Medium Heater	PGTP	Phase 2	SFX Heat Medium	1.13 MMBTU/hr	-	NA	NA	Design SH:150 psig T:150 psig ; 350°F	ASME Sec 8	GS
HX	5720	Exchanger	SFX Solution Heaters	PGTP	Phase 2	SFX Heat Medium	1.13 MMBTU/hr	-	NA	NA	Design SH:150 psig T:150 psig ; 350°F	ASME Sec 8	GS
HX	5730	Exchanger	SFX Solution Heaters	PGTP	Phase 2	SFX Heat Medium	1.13 MMBTU/hr	-	NA	NA	Design SH:150 psig T:150 psig ; 350°F	ASME Sec 8	GS
K	5640	Blower	SFX Regeneration Air Blowers	PGTP	Phase 2	Air	300 scfm	-	Motor	50	15 psig @ 400°F	0	GS
K	5650	Blower	SFX Regeneration Air Blowers	PGTP	Phase 2	Air	300 scfm	-	Motor	50	15 psig @ 400°F	0	GS
K	5930	Blower	SFX Sulfur Filter Exhaust	PGTP	Phase 2	Air	By Vendor	-	Motor	0	0	0	GS
K	5940	Blower	SFX Sulfur Filter Exhaust	PGTP	Phase 2	Air	By Vendor	-	Motor	0	0	0	GS
P	5110	Pump	SFX Inventory Return Pump	PGTP	Phase 2	SFX Chemicals	200 gpm @ 87 ft.	-	Motor	10	40 psig @ 250°F	ANSI B73.1	GS
P	5140	Pump	SFX Iron Chelate Metering Pump	PGTP	Phase 2	SFX Chemicals	2.5 GPH	-	VFD	0.25	40 psig @ 250°F	API 675	GS
P	5150	Pump	SFX Iron Chelate Metering Pump	PGTP	Phase 2	SFX Chemicals	2.5 GPH	-	VFD	0.25	40 psig @ 250°F	API 675	GS
P	5170	Pump	SFX Caustic pH Metering Pump	PGTP	Phase 2	SFX Chemicals	2.0 GPH	-	VFD	0.25	40 psig @ 250°F	API 675	GS
P	5190	Pump	SFX Inhibitor Metering Pump	PGTP	Phase 2	SFX Chemicals	1.0 GPH	-	VFD	0.25	40 psig @ 250°F	API 675	GS
P	5210	Pump	SFX De-Foamer Metering Pump	PGTP	Phase 2	SFX Chemicals	0.08 GPH	-	VFD	0.25	40 psig @ 250°F	API 675	GS
P	5220	Pump	SFX De-Foamer Metering Pump	PGTP	Phase 2	SFX Chemicals	0.08 GPH	-	VFD	0.25	40 psig @ 250°F	API 675	GS
P	5240	Pump	SFX Detergent Metering Pump	PGTP	Phase 2	SFX Chemicals	0.04 GPH	-	VFD	0.25	40 psig @ 250°F	API 675	GS
P	5250	Pump	SFX Detergent Metering Pump	PGTP	Phase 2	SFX Chemicals	0.04 GPH	-	VFD	0.25	40 psig @ 250°F	API 675	GS
P	5270	Pump	SFX Calcium Nitrate Metering Pump	PGTP	Phase 2	SFX Chemicals	0.04 GPH	-	VFD	0.25	40 psig @ 250°F	API 675	GS
P	5530	Pump	SFX Wash Water Circ./Purge Pump	PGTP	Phase 2	Water	110 gpm @ 45 psig	-	Motor	7.5	45 psig @ 250°F	ANSI B73.1	GS
P	5540	Pump	SFX Wash Water Circ./Purge Pump	PGTP	Phase 2	Water	110 gpm @ 45 psig	-	Motor	7.5	45 psig @ 250°F	ANSI B73.1	GS
P	5680	Pump	SFX Treated Gas Scrubber Pump	PGTP	Phase 2	SFX Liquids	50 gpm @ 13 psig	-	Motor	2	13 psig @ 250°F	ANSI B73.1	GS
P	5690	Pump	SFX Treated Gas Scrubber Pump	PGTP	Phase 2	SFX Liquids	50 gpm @ 13 psig	-	Motor	2	13 psig @ 250°F	ANSI B73.1	GS
P	5740	Pump	SFX Heater Pump	PGTP	Phase 2	SFX Heat Medium	170 gpm @ 86 ft.	2x3-6; 5.00 imp	Motor	10	40 psig @ 250°F	ANSI B73.1	GS
P	5750	Pump	SFX Heater Pump	PGTP	Phase 2	SFX Heat Medium	170 gpm @ 86 ft.	2x3-6; 5.00 imp	Motor	10	40 psig @ 250°F	ANSI B73.1	GS
P	5760	Pump	SFX Solution Circulation Pumps	PGTP	Phase 2	SFX Solution	360 gpm @ 125 ft.	3x4-9; 7.4" imp	Motor	50	55 psig @ 250°F	ANSI B73.1	GS
P	5770	Pump	SFX Solution Circulation Pumps	PGTP	Phase 2	SFX Solution	360 gpm @ 125 ft.	3x4-9; 7.4" imp	Motor	50	55 psig @ 250°F	ANSI B73.1	GS
P	5780	Pump	SFX Slurry Pumps	PGTP	Phase 2	SFX Slurry	95 gpm @ 96 ft.	1.5x3-6; 5" imp	Motor	10	45 psig @ 250°F	ANSI B73.1	GS
P	5790	Pump	SFX Slurry Pumps	PGTP	Phase 2	SFX Slurry	95 gpm @ 96 ft.	1.5x3-6; 5" imp	Motor	10	45 psig @ 250°F	ANSI B73.1	GS
P	5830	Pump	SFX Filtrate Pumps	PGTP	Phase 2	SFX Filtrate	115 gpm @ 161 ft.	1.5x3-6; 4.375 imp	Motor	10	70 psig @ 250°F	ANSI B73.1	GS
P	5840	Pump	SFX Filtrate Pumps	PGTP	Phase 2	SFX Filtrate	115 gpm @ 161 ft.	1.5x3-6; 4.375 imp	Motor	10	70 psig @ 250°F	ANSI B73.1	GS
T	5100	Tank	SFX Inventory Storage Tank	PGTP	Phase 2	SFX Chemicals	10,300 gallons	12'-0" DIA x 14'-4"	NA	NA	Atmospheric; Poly Tank	ASME RTP-1	GS
T	5120	Tank	SFX Iron Chelate Make-up Tank	PGTP	Phase 2	SFX Chemicals	8,000 gallons	12'-0" DIA x 11'-11"	NA	NA	Atmospheric; Poly Tank	ASME RTP-1	GS
T	5130	Tank	SFX Iron Chelate Make-up Tank	PGTP	Phase 2	SFX Chemicals	8,000 gallons	12'-0" DIA x 11'-11"	NA	NA	Atmospheric; Poly Tank	ASME RTP-1	GS
T	5160	Tank	SFX Caustic Tank	PGTP	Phase 2	SFX Chemicals	2,000 gallons	7'-5" DIA x 7'-5"	NA	NA	Atmospheric; Poly Tank	ASME RTP-1	GS
T	5180	Tank	SFX Inhibitor Tank	PGTP	Phase 2	SFX Chemicals	2,000 gallons	7'-5" DIA x 7'-5"	NA	NA	Atmospheric; Poly Tank	ASME RTP-1	GS
T	5200	Tank	SFX Defoamer Tank	PGTP	Phase 2	SFX Chemicals	255 gallons	3'-6" x 3'-6" x 3'-6"	NA	NA	Atmospheric; S/S Tote	UN/DOT	GS
T	5230	Tank	SFX Detergent Tank	PGTP	Phase 2	SFX Chemicals	255 gallons	3'-6" x 3'-6" x 3'-6"	NA	NA	Atmospheric; S/S Tote	UN/DOT	GS
T	5260	Tank	SFX Calcium Nitrate Tank	PGTP	Phase 2	SFX Chemicals	255 gallons	3'-6" x 3'-6" x 3'-6"	NA	NA	Atmospheric; S/S Tote	UN/DOT	GS
T	5820	Tank	SFX Filtrate Tank	PGTP	Phase 2	SFX Filtrate	2,300 gallons	8'-0" DIA x 6'-0"	NA	NA	Atmospheric; 120°F	ASME RTP-1	GS
V	5510	Vessel	SFX Water Wash Column	PGTP	Phase 2	Sour Gas	2.0 MMSCFD	42" ID x 30'-0" s/s	NA	NA	100 psig @ 250°F	ASME Sec 8	GS
V	5550	Vessel	SFX Wash Water Filter Separator	PGTP	Phase 2	Water	330 gal	30" ID x 9'-0" s/s	NA	NA	100 psig @ 300°F	ASME Sec 8	GS
V	5600	Vessel	SFX Treated Gas Scrubber	PGTP	Phase 2	Sweet Gas	0	42" ID x 10'-0" s/s	NA	NA	100 psig @ 250°F	ASME Sec 8	GS
V	5610	Vessel	SFX Gas Sparge Tower	PGTP	Phase 2	Sweet Gas	0	90" ID x 40'-0" s/s	NA	NA	100 psig @ 250°F	ASME Sec 8	GS
V	5620	Vessel	SFX Regenerator	PGTP	Phase 2	SFX Solution	0	72" ID x 20'-0" s/s	NA	NA	30 psig @ 375°F	ASME Sec 8	GS
V	5700	Vessel	SFX Heat Media Surge Drum	PGTP	Phase 2	SFX Heat Medium	425 Gal	36" ID x 8'-0" s/s	NA	NA	50 psig @ 250°F	ASME Sec 8	GS
V	5800	Vessel	SFX Surge Tank	PGTP	Phase 2	SFX Solution	9,250 Gal	90" ID x 28'-0" s/s	Motor	0.75	30 psig @ 250°F	ASME Sec 8	GS

Date: 1/20/16
Rev: E2
SCP
EQUIPMENT LIST - Revised for Permit
AERA - FIELD REDEVELOPMENT PROJECT

LEGEND for Plant Processes

COS	Clean Oil Storage	OCP	Oil Cleaning Plant	SCP	Solids Concentration Plant
CPP	Central Plant Processes	Off-Plot	Off-Plot / Fire Water	SGS	Steam Generation Site
GS	Group Station	PGSG	Produced Gas Steam Generation	WCP	Water Cleaning Plant
LOS	Light Oil Storage	PGTP	Produced Gas Treatment Plant	WSP	Water Softening Plant

Feel free to use autofilters. Warning, Performing a sort will sever links to the other sheets!

IDENTIFICATION		DESCRIPTION				EQUIPMENT INFORMATION							
Tag Identifier	Tag Number	Description short	Description Long	Process Grouping	Project Phase (timing)	Process Media	Capacity	Size	Driver Type	Horse power	Ratings (MAWP, Press/Temp, etc.)	Codes	Location
CF	7060	Centrifuge	Sludge Liquid Desanding	SCP	Phase 1	Oily Solids	30 GPM	89" L x 44" W x 27" H	VFD	20	30 psig @ 250°F	0	CPF
HX	7330	Heat Exchanger	Emulsion/Steam S/T Exchanger	SCP	Phase 1	Emulsion	0	-	NA	NA	250 psig @ 400°F	ASME Sec 8	CPF
P	7040	Pump	Centrifuge Feed Pump	SCP	Phase 1	Oily Solids	35 gpm @ 30 psig	-	VFD	2	30 psig @ 250°F	API 676	CPF
P	7050	Pump	Centrifuge Feed Pump	SCP	Phase 1	Oily Solids	35 gpm @ 30 psig	-	VFD	2	30 psig @ 250°F	API 676	CPF
P	7080	Pump	Skim Oil Tank Oil Transfer Pump	SCP	Phase 1	Emulsion	50 gpm @ 45 psig	-	VFD	2	45 psig @ 250°F	API 676	CPF
P	7090	Pump	Skim Oil Tank Oil Transfer Pump	SCP	Phase 1	Emulsion	50 gpm @ 45 psig	-	VFD	2	45 psig @ 250°F	API 676	CPF
P	7100	Pump	Skim Oil Tank Water Transfer Pump	SCP	Phase 1	Produced Water	150 gpm @ 30 psig	-	Motor	7.5	45 psig @ 250°F	ANSI B73.1	CPF
P	7110	Pump	Skim Oil Tank Water Transfer Pump	SCP	Phase 1	Produced Water	150 gpm @ 30 psig	-	Motor	7.5	45 psig @ 250°F	ANSI B73.1	CPF
T	7030	Sludge Tank	Sludge Separation Tank	SCP	Phase 1	Oily Solids	1,000 BBL	-6" DIA x 16'-0" (w/7'-0" Co	NA	NA	Design: <1 psig @ 250°F	API 650	CPF
T	7070	Skim Oil Tank	Skim Oil Tank	SCP	Phase 1	Skim Oil	1,000 BBL	21'-6" DIA x 16'-0"	NA	NA	Design: <1 psig @ 250°F	API 650	CPF
V	7340	Electrostatic Coalescer	Flash Treater Horizontal Vessel	SCP	Phase 1	Emulsion	48 BPD	12'-0" DIA x 60'-0" S/S	NA	NA	250 psig @ 400°F	ASME Sec 8	CPF
CF	7170	Centrifuge	Sludge Liquid Desanding	SCP	Phase 2	Oily Solids	30 GPM	89" L x 44" W x 27" H	VFD	20	30 psig @ 250°F	-	CPF
P	7150	Pump	Centrifuge Feed Charge Pump	SCP	Phase 2	Oily Solids	35 gpm @ 30 psig	-	VFD	2	30 psig @ 250°F	API 676	CPF
P	7160	Pump	Centrifuge Feed Charge Pump	SCP	Phase 2	Oily Solids	35 gpm @ 30 psig	-	VFD	2	30 psig @ 250°F	API 676	CPF
P	7190	Pump	Skim Oil Tank Oil Transfer Pump	SCP	Phase 2	Emulsion	50 gpm @ 45 psig	-	VFD	2	45 psig @ 250°F	API 676	CPF
P	7200	Pump	Skim Oil Tank Oil Transfer Pump	SCP	Phase 2	Emulsion	50 gpm @ 45 psig	-	VFD	2	45 psig @ 250°F	API 676	CPF
P	7210	Pump	Skim Oil Tank Water Transfer Pump	SCP	Phase 2	Produced Water	150 gpm @ 30 psig	-	Motor	7.5	45 psig @ 250°F	ANSI B73.1	CPF
P	7220	Pump	Skim Oil Tank Water Transfer Pump	SCP	Phase 2	Produced Water	150 gpm @ 30 psig	-	Motor	7.5	45 psig @ 250°F	ANSI B73.1	CPF
T	7140	Sludge Tank	Sludge Separation Tank	SCP	Phase 2	Oily Solids	1,000 BBL	-6" DIA x 16'-0" (w/7'-0" Co	NA	NA	Design: <1 psig @ 250°F	API 650	CPF
T	7180	Skim Oil Tank	Skim Oil Tank	SCP	Phase 2	Skim Oil	1,000 BBL	21'-6" DIA x 16'-0"	NA	NA	Design: <1 psig @ 250°F	API 650	CPF

Date: 1/20/16
Rev: E2
SGS
EQUIPMENT LIST - Revised for Permit
AERA - FIELD REDEVELOPMENT PROJECT

LEGEND for Plant Processes

COS	Clean Oil Storage	OCP	Oil Cleaning Plant	SCP	Solids Concentration Plant
CPP	Central Plant Processes	Off-Plot	Off-Plot / Fire Water	SGS	Steam Generation Site
GS	Group Station	PGSG	Produced Gas Steam Generation	WCP	Water Cleaning Plant
LOS	Light Oil Storage	PGTP	Produced Gas Treatment Plant	WSP	Water Softening Plant

Feel free to use autofilters. Warning, Performing a sort will sever links to the other sheets!

IDENTIFICATION		DESCRIPTION				EQUIPMENT INFORMATION							
Tag Identifier	Tag Number	Description short	Description Long	Process Grouping	Project Phase (timing)	Process Media	Capacity	Size	Driver Type	Horse power	Ratings (MAWP, Press/Temp, etc.)	Codes	Location
HX	8110	Heat Exchanger	Feedwater Pre-Heater	SGS	Phase 1	Water	5.2 MMBTU/HR	-	NA	NA	Design SH:150 psig T:2,600 psig ; 300°F	ASME Sec 8	SGS
HX	8210	Heat Exchanger	Feedwater Pre-Heater	SGS	Phase 1	Water	5.2 MMBTU/HR	-	NA	NA	Design SH:150 psig T:2,600 psig ; 300°F	ASME Sec 8	SGS
HX	8310	Heat Exchanger	Feedwater Pre-Heater	SGS	Phase 1	Water	5.2 MMBTU/HR	-	NA	NA	Design SH:150 psig T:2,600 psig ; 300°F	ASME Sec 8	SGS
K	8750	Air Compressor	Instrument Air Skid	SGS	Phase 1	Air	115 ACFM @ 125 psi	-	Motor	30	125 psig @ 100°F	0	SGS
K	8810	Air Compressor	Instrument Air Skid	SGS	Phase 1	Air	115 ACFM @ 125 psi	-	Motor	30	125 psig @ 100°F	0	SGS
P	8100	Feedwater Pump	Steam Generator Feed Pump	SGS	Phase 1	Water	6,900 BPD @ 2600 PSIG	-	VFD	350	2,600 psig @ 200°F	API 674	SGS
P	8200	Feedwater Pump	Steam Generator Feed Pump	SGS	Phase 1	Water	6,900 BPD @ 2600 PSIG	-	VFD	350	2,600 psig @ 200°F	API 674	SGS
P	8300	Feedwater Pump	Steam Generator Feed Pump	SGS	Phase 1	Water	6,900 BPD @ 2600 PSIG	-	VFD	350	2,600 psig @ 200°F	API 674	SGS
P	8720	Pump	Drain Tank Pump	SGS	Phase 1	Condensate	100 gpm @ 70 psig	-	Motor	10	30 psig @ 250°F	API 676	SGS
P	8730	Pump	Drain Tank Pump	SGS	Phase 1	Condensate	100 gpm @ 70 psig	-	Motor	10	30 psig @ 250°F	API 676	SGS
P	8740	Pump	Drain Tank Sump Pump	SGS	Phase 1	Condensate	20 gpm @ 10 psig	-	Motor	1	30 psig @ 250°F	API 676	SGS
SG	8120	Steam Generator	Steam Generator Skid	SGS	Phase 1	Steam	85 MMBTU/HR	-	VFD	150	2,600 psig @ 675°F	ASME Sec1	SGS
SG	8220	Steam Generator	Steam Generator Skid	SGS	Phase 1	Steam	85 MMBTU/HR	-	VFD	150	2,600 psig @ 675°F	ASME Sec1	SGS
SG	8320	Steam Generator	Steam Generator Skid	SGS	Phase 1	Steam	85 MMBTU/HR	-	VFD	150	2,600 psig @ 675°F	ASME Sec1	SGS
V	8010	Separator	Fuel Gas Scrubber	SGS	Phase 1	Fuel Gas	12 MMSCFD	4'-0" DIA x 12'-0" S/S	NA	NA	MAWP: 350 psig @ 250 F	ASME Sec 8	SGS
V	8710	Separator	Blowdown/Drain Tank	SGS	Phase 1	Fuel Gas	100 BBL	6'-0" DIA x 20'-0" S/S	NA	NA	MAWP: 15 psig @ 250 F	ASME Sec 8	SGS
V	8780	Air Receiver	Instrument Air Receiver	SGS	Phase 1	Air	400 gal	36" dia x 80" s/s	NA	NA	200 psig @ 200°F	ASME Sec 8	SGS
V	8790	Air Dryer	Instrument Air Dryer	SGS	Phase 1	Air	250 ACFM	-	NA	NA	200 psig @ 200°F	ASME Sec 8	SGS
V	8800	Air Dryer	Instrument Air Dryer	SGS	Phase 1	Air	250 ACFM	-	NA	NA	200 psig @ 200°F	ASME Sec 8	SGS
HX	8410	Heat Exchanger	Feedwater Pre-Heater	SGS	Phase 2	Water	5.2 MMBTU/HR	-	NA	NA	Design SH:150 psig T:2,600 psig ; 300°F	ASME Sec 8	SGS
HX	8510	Heat Exchanger	Feedwater Pre-Heater	SGS	Phase 2	Water	5.2 MMBTU/HR	-	NA	NA	Design SH:150 psig T:2,600 psig ; 300°F	ASME Sec 8	SGS
HX	8610	Heat Exchanger	Feedwater Pre-Heater	SGS	Phase 2	Water	5.2 MMBTU/HR	-	NA	NA	Design SH:150 psig T:2,600 psig ; 300°F	ASME Sec 8	SGS
P	8400	Feedwater Pump	Steam Generator Feed Pump	SGS	Phase 2	Water	6,900 BPD @ 2600 PSIG	-	VFD	350	2,600 psig @ 200°F	API 674	SGS
P	8500	Feedwater Pump	Steam Generator Feed Pump	SGS	Phase 2	Water	6,900 BPD @ 2600 PSIG	-	VFD	350	2,600 psig @ 200°F	API 674	SGS
P	8600	Feedwater Pump	Steam Generator Feed Pump	SGS	Phase 2	Water	6,900 BPD @ 2600 PSIG	-	VFD	350	2,600 psig @ 200°F	API 674	SGS
SG	8420	Steam Generator	Steam Generator Skid	SGS	Phase 2	Steam	85 MMBTU/HR	-	VFD	150	2,600 psig @ 675°F	ASME Sec1	SGS
SG	8520	Steam Generator	Steam Generator Skid	SGS	Phase 2	Steam	85 MMBTU/HR	-	VFD	150	2,600 psig @ 675°F	ASME Sec1	SGS
SG	8620	Steam Generator	Steam Generator Skid	SGS	Phase 2	Steam	85 MMBTU/HR	-	VFD	150	2,600 psig @ 675°F	ASME Sec1	SGS

Date: 1/20/16
Rev: E2
WCP
EQUIPMENT LIST - Revised for Permit
AERA - FIELD REDEVELOPMENT PROJECT

LEGEND for Plant Processes

COS	Clean Oil Storage	OCP	Oil Cleaning Plant	SCP	Solids Concentration Plant
CPP	Central Plant Processes	Off-Plot	Off-Plot / Fire Water	SGS	Steam Generation Site
GS	Group Station	PGSG	Produced Gas Steam Generation	WCP	Water Cleaning Plant
LOS	Light Oil Storage	PGTP	Produced Gas Treatment Plant	WSP	Water Softening Plant

Feel free to use autofilters. Warning, Performing a sort will sever links to the other sheets!

IDENTIFICATION		DESCRIPTION				EQUIPMENT INFORMATION							
Tag Identifier	Tag Number	Description short	Description Long	Process Grouping	Project Phase (timing)	Process Media	Capacity	Size	Driver Type	Horse power	Ratings (MAWP, Press/Temp, etc.)	Codes	Location
F	3230	Filter	Deep Bed Filter	WCP	Phase 1	Water	29,000 BPD	9'-0" DIA x 9'-0" S/S	Motor	40	150 psig @ 200°F	ASME Sec 8	CPF
F	3240	Filter	Deep Bed Filter	WCP	Phase 1	Water	29,000 BPD	9'-0" DIA x 9'-0" S/S	Motor	40	150 psig @ 200°F	ASME Sec 8	CPF
FF	3010	Fin Fan Cooler	Produced Water Cooler	WCP	Phase 1	Water	11.4 MMBTU/hr	14'-0" x 14'-0"	VFD	20	150 psig @ 260°F	API 661	CPF
FF	3020	Fin Fan Cooler	Produced Water Cooler	WCP	Phase 1	Water	11.4 MMBTU/hr	14'-0" x 14'-0"	VFD	20	150 psig @ 260°F	API 661	CPF
P	3040	Pump	IGF Charge Pump	WCP	Phase 1	Water	875 gpm @ 20 psig	-	VFD	30	20 psig @ 250°F	ANSI B73.1	CPF
P	3050	Pump	IGF Charge Pump	WCP	Phase 1	Water	875 gpm @ 20 psig	-	VFD	30	20 psig @ 250°F	ANSI B73.1	CPF
P	3070	Pump	IGF Eductor Pump	WCP	Phase 1	Water	350 gpm @ 60 psig	-	Motor	25	60 psig @ 250°F	ANSI B73.1	CPF
P	3080	Pump	IGF Eductor Pump	WCP	Phase 1	Water	350 gpm @ 60 psig	-	Motor	25	60 psig @ 250°F	ANSI B73.1	CPF
P	3210	Pump	Filter Feed Pump	WCP	Phase 1	Water	730 gpm @ 65 psig	-	VFD	50	65 psig @ 250°F	ANSI B73.1	CPF
P	3220	Pump	Filter Feed Pump	WCP	Phase 1	Water	730 gpm @ 65 psig	-	VFD	50	65 psig @ 250°F	ANSI B73.1	CPF
P	3250	Pump	Desander Pump	WCP	Phase 1	Water	150 gpm @ 100 psig	-	Motor	25	100 psig @ 250°F	ANSI B73.1	CPF
P	3260	Pump	Desander Pump	WCP	Phase 1	Water	150 gpm @ 100 psig	-	Motor	25	100 psig @ 250°F	ANSI B73.1	CPF
P	3410	Pump	Softener Feed Pump	WCP	Phase 1	Water	550 gpm @ 80 psig	-	VFD	50	80 psig @ 250°F	ANSI B73.1	CPF
P	3420	Pump	Softener Feed Pump	WCP	Phase 1	Water	550 gpm @ 80 psig	-	VFD	50	80 psig @ 250°F	ANSI B73.1	CPF
P	3440	Pump	Backwash Skim Pump	WCP	Phase 1	Water	550 gpm @ 40 psig	-	VFD	25	40 psig @ 250°F	ANSI B73.1	CPF
T	3030	Tank	Clarifier Tank	WCP	Phase 1	Water	5,000 BBL	38'-8" DIA x 24'-0"	NA	NA	Design: <1 psig @ 250°F	API 650	CPF
T	3200	Tank	Filter Feed Tank	WCP	Phase 1	Water	5,000 BBL	38'-8" DIA x 24'-0"	NA	NA	Design: <1 psig @ 250°F	API 650	CPF
T	3400	Tank	Filtered Water Tank	WCP	Phase 1	Water	5,000 BBL	38'-8" DIA x 24'-0"	NA	NA	Design: <1 psig @ 250°F	API 650	CPF
T	3430	Tank	Filter Backwash Tank	WCP	Phase 1	Water	500 BBL	6" DIA x16' w/6' Cone (24' C	NA	NA	Design: <1 psig @ 250°F	API 650	CPF
V	3060	Vessel	IGF Unit	WCP	Phase 1	Water	30,000 BPD	6'-0" DIA x 24'-0" S/S	NA	NA	50 psig @ 250°F	ASME Sec 8	CPF
F	3330	Filter	Deep Bed Filter	WCP	Phase 2	Water	29,000 BPD	9'-0" DIA x 9'-0" S/S	Motor	40	150 psig @ 200°F	ASME Sec 8	CPF
F	3340	Filter	Deep Bed Filter	WCP	Phase 2	Water	29,000 BPD	9'-0" DIA x 9'-0" S/S	Motor	40	150 psig @ 200°F	ASME Sec 8	CPF
FF	3110	Fin Fan Cooler	Produced Water Cooler	WCP	Phase 2	Water	11.4 MMBTU/hr	14'-0" x 14'-0"	VFD	20	150 psig @ 260°F	API 661	CPF
FF	3120	Fin Fan Cooler	Produced Water Cooler	WCP	Phase 2	Water	11.4 MMBTU/hr	14'-0" x 14'-0"	VFD	20	150 psig @ 260°F	API 661	CPF
P	3140	Pump	IGF Charge Pump	WCP	Phase 2	Water	875 gpm @ 20 psig	-	VFD	30	20 psig @ 250°F	ANSI B73.1	CPF
P	3150	Pump	IGF Charge Pump	WCP	Phase 2	Water	875 gpm @ 20 psig	-	VFD	30	20 psig @ 250°F	ANSI B73.1	CPF
P	3170	Pump	IGF Eductor Pump	WCP	Phase 2	Water	350 gpm @ 60 psig	-	Motor	25	60 psig @ 250°F	ANSI B73.1	CPF
P	3180	Pump	IGF Eductor Pump	WCP	Phase 2	Water	350 gpm @ 60 psig	-	Motor	25	60 psig @ 250°F	ANSI B73.1	CPF
P	3310	Pump	Filter Feed Pump	WCP	Phase 2	Water	730 gpm @ 65 psig	-	VFD	50	65 psig @ 250°F	ANSI B73.1	CPF
P	3320	Pump	Filter Feed Pump	WCP	Phase 2	Water	730 gpm @ 65 psig	-	VFD	50	65 psig @ 250°F	ANSI B73.1	CPF
P	3350	Pump	Desander Pump	WCP	Phase 2	Water	150 gpm @ 100 psig	-	Motor	25	100 psig @ 250°F	ANSI B73.1	CPF
P	3360	Pump	Desander Pump	WCP	Phase 2	Water	150 gpm @ 100 psig	-	Motor	25	100 psig @ 250°F	ANSI B73.1	CPF
P	3510	Pump	Softener Feed Pump	WCP	Phase 2	Water	550 gpm @ 80 psig	-	VFD	50	80 psig @ 250°F	ANSI B73.1	CPF
P	3520	Pump	Softener Feed Pump	WCP	Phase 2	Water	550 gpm @ 80 psig	-	VFD	50	80 psig @ 250°F	ANSI B73.1	CPF
P	3540	Pump	Backwash Skim Pump	WCP	Phase 2	Water	550 gpm @ 40 psig	-	VFD	25	40 psig @ 250°F	ANSI B73.1	CPF
T	3130	Tank	Clarifier Tank	WCP	Phase 2	Water	5,000 BBL	38'-8" DIA x 24'-0"	NA	NA	Design: <1 psig @ 250°F	API 650	CPF
T	3300	Tank	Filter Feed Tank	WCP	Phase 2	Water	5,000 BBL	38'-8" DIA x 24'-0"	NA	NA	Design: <1 psig @ 250°F	API 650	CPF
T	3500	Tank	Filtered Water Tank	WCP	Phase 2	Water	5,000 BBL	38'-8" DIA x 24'-0"	NA	NA	Design: <1 psig @ 250°F	API 650	CPF
T	3530	Tank	Filter Backwash Tank	WCP	Phase 2	Water	500 BBL	6" DIA x16' w/6' Cone (24' C	NA	NA	Design: <1 psig @ 250°F	API 650	CPF
V	3160	Vessel	IGF Unit	WCP	Phase 2	Water	30,000 BPD	6'-0" DIA x 24'-0" S/S	NA	NA	50 psig @ 250°F	ASME Sec 8	CPF

Date: 1/20/16
Rev: E2
WSP
EQUIPMENT LIST - Revised for Permit
AERA - FIELD REDEVELOPMENT PROJECT

LEGEND for Plant Processes

COS	Clean Oil Storage	OCP	Oil Cleaning Plant	SCP	Solids Concentration Plant
CPP	Central Plant Processes	Off-Plot	Off-Plot / Fire Water	SGS	Steam Generation Site
GS	Group Station	PGSG	Produced Gas Steam Generation	WCP	Water Cleaning Plant
LOS	Light Oil Storage	PGTP	Produced Gas Treatment Plant	WSP	Water Softening Plant

Feel free to use autofilters. Warning, Performing a sort will sever links to the other sheets!

IDENTIFICATION		DESCRIPTION				EQUIPMENT INFORMATION							
Tag Identifier	Tag Number	Description short	Description Long	Process Grouping	Project Phase (timing)	Process Media	Capacity	Size	Driver Type	Horse power	Ratings (MAWP, Press/Temp, etc.)	Codes	Location
P	4210	Pump	Steam Plant Feed Pump	WSP	Phase 1	Water	525 gpm @ 300 psig	-	Motor	150	300 psig @ 250°F	ANSI B73.1	CPF
P	4220	Pump	Steam Plant Feed Pump	WSP	Phase 1	Water	525 gpm @ 300 psig	-	Motor	150	300 psig @ 250°F	ANSI B73.1	CPF
P	4230	Pump	Brine Make-Up/Dilution Pump	WSP	Phase 1	Water	200 gpm @ 80 psig	-	Motor	15	80 psig @ 250°F	ANSI B73.1	CPF
P	4240	Pump	Brine Make-Up/Dilution Pump	WSP	Phase 1	Water	200 gpm @ 80 psig	-	Motor	15	80 psig @ 250°F	ANSI B73.1	CPF
P	4250	Pump	Softener Backwash Pump	WSP	Phase 1	Water	800 gpm @ 60 psig	-	Motor	50	60 psig @ 250°F	ANSI B73.1	CPF
P	4260	Pump	Softener Backwash Pump	WSP	Phase 1	Water	800 gpm @ 60 psig	-	Motor	50	60 psig @ 250°F	ANSI B73.1	CPF
P	4270	Pump	Concentrated Brine Pump	WSP	Phase 1	Water	140 gpm @ 80 psig	-	Motor	15	80 psig @ 250°F	ANSI B73.1	CPF
P	4280	Pump	Concentrated Brine Pump	WSP	Phase 1	Water	140 gpm @ 80 psig	-	Motor	15	80 psig @ 250°F	ANSI B73.1	CPF
P	4610	Pump	Water Injection Pump	WSP	Phase 1	Water	12,000 BPD@1,800psig	-	VFD	500	1,800 psig @ 200°F	API 674	CPF
P	4620	Pump	Water Injection Pump	WSP	Phase 1	Water	12,000 BPD@1,800psig	-	VFD	500	1,800 psig @ 200°F	API 674	CPF
T	4200	Tank	Soft Water Tank	WSP	Phase 1	Water	10,000 BBL	55'-0" DIA x 24'-0"	NA	NA	Design: <1 psig @ 250°F	API 650	CPF
T	4290	Tank	Brine Tank	WSP	Phase 1	Water	170 Tons Salt	14'-0" DIA x 35'-0"	NA	NA	Design: Atmospheric @ 180°F	ASME RTP-1	CPF
T	4300	Tank	Brine Tank	WSP	Phase 1	Water	170 Tons Salt	14'-0" DIA x 35'-0"	NA	NA	Design: Atmospheric @ 180°F	ASME RTP-1	CPF
T	4600	Tank	Water Injection Tank	WSP	Phase 1	Water	3,000 BBL	29'-9" DIA x 24'-0"	NA	NA	Design: <1 psig @ 250°F	API 650	CPF
V	4010	Vessel	SAC Primary Softener Vessel	WSP	Phase 1	Water	18,500 BPD	10'-0" DIA x 11'-0" S/S	NA	NA	100 psig @ 239°F	ASME Sec 8	CPF
V	4020	Vessel	SAC Polisher Softener Vessel	WSP	Phase 1	Water	18,500 BPD	7'-0" DIA x 11'-0" S/S	NA	NA	100 psig @ 239°F	ASME Sec 8	CPF
V	4030	Vessel	SAC Primary Softener Vessel	WSP	Phase 1	Water	18,500 BPD	10'-0" DIA x 11'-0" S/S	NA	NA	100 psig @ 239°F	ASME Sec 8	CPF
V	4040	Vessel	SAC Polisher Softener Vessel	WSP	Phase 1	Water	18,500 BPD	7'-0" DIA x 11'-0" S/S	NA	NA	100 psig @ 239°F	ASME Sec 8	CPF
V	4050	Vessel	WAC Polisher Softener Vessel	WSP	Phase 1	Water	18,500 BPD	7'-0" DIA x 9'-0" S/S	NA	NA	100 psig @ 239°F	ASME Sec 8	CPF
V	4060	Vessel	WAC Polisher Softener Vessel	WSP	Phase 1	Water	18,500 BPD	7'-0" DIA x 9'-0" S/S	NA	NA	100 psig @ 239°F	ASME Sec 8	CPF
P	4410	Pump	Steam Plant Feed Pump	WSP	Phase 2	Water	525 gpm @ 300 psig	-	Motor	150	300 psig @ 250°F	ANSI B73.1	CPF
P	4420	Pump	Steam Plant Feed Pump	WSP	Phase 2	Water	525 gpm @ 300 psig	-	Motor	150	300 psig @ 250°F	ANSI B73.1	CPF
P	4430	Pump	Brine Make-Up/Dilution Pump	WSP	Phase 2	Water	200 gpm @ 80 psig	-	Motor	15	80 psig @ 250°F	ANSI B73.1	CPF
P	4440	Pump	Brine Make-Up/Dilution Pump	WSP	Phase 2	Water	200 gpm @ 80 psig	-	Motor	15	80 psig @ 250°F	ANSI B73.1	CPF
P	4450	Pump	Softener Backwash Pump	WSP	Phase 2	Water	800 gpm @ 60 psig	-	Motor	50	60 psig @ 250°F	ANSI B73.1	CPF
P	4460	Pump	Softener Backwash Pump	WSP	Phase 2	Water	800 gpm @ 60 psig	-	Motor	50	60 psig @ 250°F	ANSI B73.1	CPF
P	4470	Pump	Concentrated Brine Pump	WSP	Phase 2	Water	140 gpm @ 80 psig	-	Motor	15	80 psig @ 250°F	ANSI B73.1	CPF
P	4480	Pump	Concentrated Brine Pump	WSP	Phase 2	Water	140 gpm @ 80 psig	-	Motor	15	80 psig @ 250°F	ANSI B73.1	CPF
V	9990	Skid	Nitrogen Storage and Vaporization Skid	WSP	Phase 2	Nitrogen	0	-	0	0	0	0	CPF
T	4400	Tank	Soft Water Tank	WSP	Phase 2	Water	10,000 BBL	55'-0" DIA x 24'-0"	NA	NA	Design: <1 psig @ 250°F	API 650	CPF
T	4490	Tank	Brine Tank	WSP	Phase 2	Water	170 Tons Salt	14'-0" DIA x 35'-0"	NA	NA	Design: Atmospheric @ 180°F	ASME RTP-1	CPF
T	4500	Tank	Brine Tank	WSP	Phase 2	Water	170 Tons Salt	14'-0" DIA x 35'-0"	NA	NA	Design: Atmospheric @ 180°F	ASME RTP-1	CPF
V	4110	Vessel	SAC Primary Softener Vessel	WSP	Phase 2	Water	18,500 BPD	10'-0" DIA x 11'-0" S/S	NA	NA	100 psig @ 239°F	ASME Sec 8	CPF
V	4120	Vessel	SAC Polisher Softener Vessel	WSP	Phase 2	Water	18,500 BPD	7'-0" DIA x 11'-0" S/S	NA	NA	100 psig @ 239°F	ASME Sec 8	CPF
V	4130	Vessel	SAC Primary Softener Vessel	WSP	Phase 2	Water	18,500 BPD	10'-0" DIA x 11'-0" S/S	NA	NA	100 psig @ 239°F	ASME Sec 8	CPF
V	4140	Vessel	SAC Polisher Softener Vessel	WSP	Phase 2	Water	18,500 BPD	7'-0" DIA x 11'-0" S/S	NA	NA	100 psig @ 239°F	ASME Sec 8	CPF
V	4150	Vessel	WAC Polisher Softener Vessel	WSP	Phase 2	Water	18,500 BPD	7'-0" DIA x 9'-0" S/S	NA	NA	100 psig @ 239°F	ASME Sec 8	CPF
V	4160	Vessel	WAC Polisher Softener Vessel	WSP	Phase 2	Water	18,500 BPD	7'-0" DIA x 9'-0" S/S	NA	NA	100 psig @ 239°F	ASME Sec 8	CPF

Steam Generator Specification

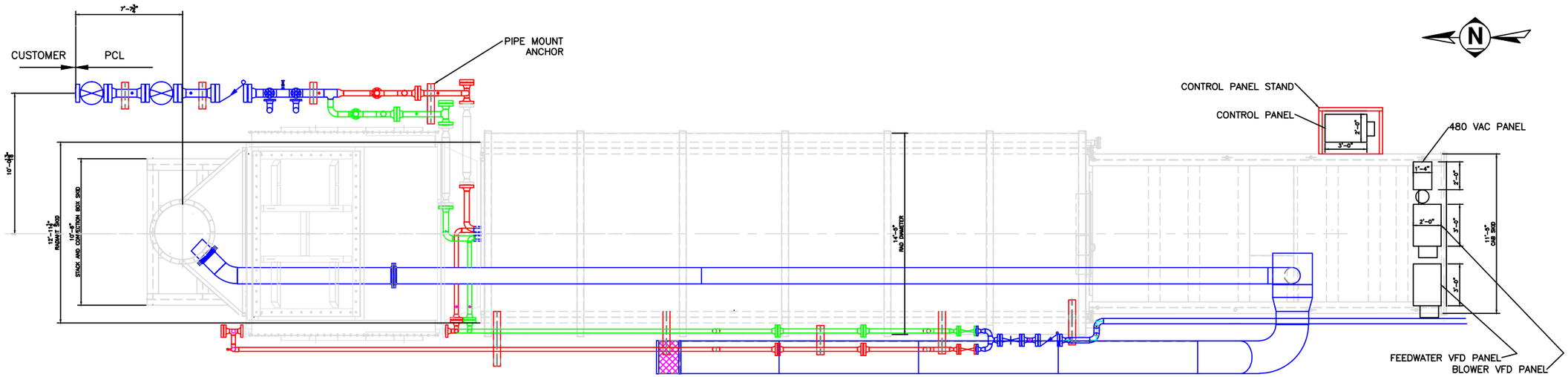

CB and STACK 105,000 lbs

RADIANT SECTION 125,000 lbs

CAB SECTION 15,000 lbs

PLAN VIEW

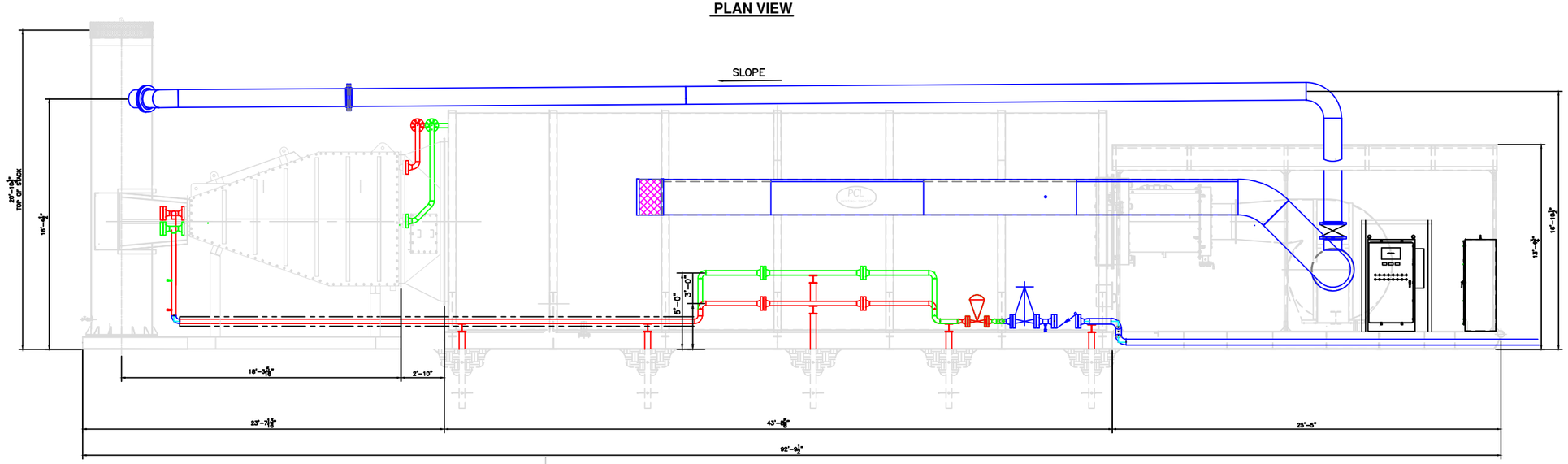

ELEVATION VIEW

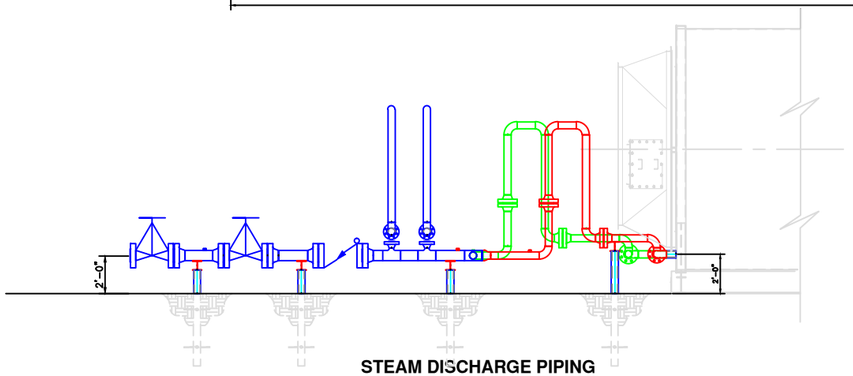

STEAM DISCHARGE PIPING

PRELIMINARY NOT FOR CONSTRUCTION

THIS DRAWING IS THE PROPERTY OF PCL INDUSTRIAL SERVICES INC. IN CONSIDERATION OF THE USE OF THIS DRAWING, THE USER AGREES THAT IT SHALL BE TREATED AS CONFIDENTIAL MATERIAL, THAT IT SHALL BE RETURNED UPON REQUEST, AND THAT THE CONTENTS THEREOF SHALL NOT BE DISCLOSED, REPRODUCED, COPIED, OR OTHERWISE DISPOSED DIRECTLY OR INDIRECTLY, NOR SHALL IT BE USED FOR ANY PURPOSE OTHER THAN THAT FOR WHICH IT IS SPECIFICALLY FURNISHED, EXCEPT BY WRITTEN PERMISSION OF PCL INDUSTRIAL SERVICES INC.

REV	DESCRIPTION	DATE	DRWN.	CHKD.
B	ADDED OVERALL DIMENSIONS	12/29/10	RLS	RLS
A	PRELIMINARY	12/20/10	RLS	RLS

SCALE	NONE	DRWN.	RLS
DATE	12/20/2010	CHKD.	R. SIMMONS

PCL Industrial Services, Inc.
1500 SOUTH UNION AVENUE
BAKERSFIELD, CA. 93307
TEL. (661) 831-5356
FAX (661) 831-5355

DESCRIPTION: BOILER EXTERNAL PIPING (BEP-GENERAL LAYOUT)

CUSTOMER: AERA ENERGY LLC

CUSTOMER'S APPROVAL SIGN. | CUSTOMER'S P.O. NO.

PCL ENG. APPROVAL SIGN. | AUTHORIZED INSPECTOR APPROVAL SIGN.

PROJECT NO.	DRAWING NO.	REV.	SHT.
6220298	6220298-BEP	B	1 OF 1

Combustion

fives

April 23, 2014

PCL Industrial Services, Inc
1500 South Union Ave.
Bakersfield, CA 93307

ATTENTION: Mr. Mark Pittser
Manager, Business Development

SUBJECT: Indicative emission guarantees for 85 MM Btu/h and 62.5 MMBtu/h Ultra Low NOx GLE Combustion Systems

Dear Mr. Pittser,

We have reviewed the information that you have provided in the e-mail dated March 24, 2014 and subsequent conversations with you and Eric Paulson of Aera Energy on April 14 and 21. Based on this information, we can offer you an indicative emissions performance guarantee, detailed below.

Emissions guarantees have both a technical and commercial significance. On the technical front, Fives North American Combustion performs a rigorous analysis of emissions performance with every warranty we issue. General arrangement drawings, fuel analyses and intended modes of operation are all considered by this process. Likewise a warranty represents a significant commercial obligation. Such an obligation is evaluated with other contractual terms, such as price, delivery, scope of supply and overall risk profile of the proposed contract. At this time we are able to offer PCL indicative guarantees which represent what we could agree to as a portion of a sales contract, provided all the conditions enumerated are appropriate. Indicative guarantees are not a warrantable equipment performance item associated with any specific contract or equipment order but could be “converted” later upon a formal job review process.

Fives North American Combustion, Inc.
4455 East 71st Street
Cleveland, OH 44105 USA
T 216.271.6000 - F 216.641.7852
www.fivesgroup.com

Indicative Performance Guarantee – 85 MMBtu/h 4231-GLE

Based on the information that PCL Industrial Services, Inc. and Aera Energy have provided for an 85 MMBtu/h horizontal steam generator, Fives North American can offer the following **Indicative Emission Levels**:

NOx

The combustion system generated NOx will be guaranteed not to exceed:

- 6 ppm (corrected to a 3% O2 dry volume basis) over a range from 85 MMBtu/h to 34 MMBtu/h (HHV) with the fuel specified below.

CO

The combustion system generated CO will be guaranteed not to exceed:

- 25 ppm (corrected to a 3% O2 dry volume basis) over a range from 85 MMBtu/h to 34 MMBtu/h (HHV) with the fuel specified below.

The following conditions will apply to the above indicative guarantee:

1. The target fuel/air ratio for each burner is 10% - 15% excess air which is to be mixed with 25% Flue Gas Recirculation (FGR). Final settings of excess air and FGR will be determined by FivesNA upon commissioning and will be set to achieve emissions performance guarantees.
2. The fuel will be PUC quality natural gas fuel having a higher heating value of 1054 Btu/ft³, characterized below:

Fuel Composition:		Volume %
Percent Methane	(CH4):	89.60
Percent Ethane	(C2H6):	4.57
Percent Propane	(C3H8):	1.98
Percent n-Butane	(C4H10):	0.35
Percent n-Pentane	(C5H12):	0.12
Percent n-Hexane	(C6H14):	0.02
Percent Carbon Dioxide	(CO2):	3.05
Percent Nitrogen	(N2):	0.31
Percent Total		100.00
Air/Fuel Ratio		9.98
Specific Gravity		0.634

3. The process temperature will not exceed 1600 °F.
4. A reaction chamber will be mounted in a horizontal steam generator with a radiant section tube ID of at least 9'-11" and a length of 42'.
5. Combustion air temperature will be 30°F to 115°F. The FGR temperature is estimated to be 240 °F and limited to no greater than 250 °F.
6. Combustion system control will include the latest version of the proprietary patented algorithms (8379-CMS-EMB-SW4 or higher) and a fully functional "mass flow control" fuel and air ratio system.
7. The emissions data will be obtained from a sample port at a point downstream of the exit of the burner reaction chamber.

8. The test data will be extracted from a single point and time averaged.
9. FivesNA will verify all emission levels noted above following start-up when the operating mode of the burner and combustion system is at steady state and absent of any pressure spikes in either the field supply or duct systems. Our standard service rates outlined in our Sheet M9P-S will apply. If no further testing is conducted as outlined in the attached **CONDITION AND LIMITS OF FIVES NORTH AMERICAN COMBUSTION. INC. ("FIVESNA") EMISSIONS LEVELS GUARANTEE (GRM12)**, this test will be sufficient to satisfy the guarantee.
10. A chemiluminescent NOx analyzer or other device suitable for measuring ultra-low NOx emission levels, supplied by others, must be made available to FivesNA at time of start-up.

No formal process or emissions guarantees are offered at this time. Warranties are only offered as part of an actionable, firm price proposal. All warranty issues will be addressed per FivesNA's Conditions and Limits and/or Standard Terms and Conditions which are attached.

Indicative Performance Guarantee – 62.5 MMBtu/h 4231 GLE with Produced Gas

Based on the information that PCL Industrial Services, Inc. and Aera Energy have provided for a 62.5 MMBtu/h horizontal steam generator, Fives North American can offer the following **Indicative Emission Levels**:

NOx

The combustion system generated NOx will be guaranteed not to exceed:

- 9 ppm (corrected to a 3% O2 dry volume basis) over a range from 62.5 MMBtu/h to 25 MMBtu/h (HHV) with the fuel specified below.

CO

The combustion system generated CO will be guaranteed not to exceed:

- 25 ppm (corrected to a 3% O2 dry volume basis) over a range from 62.5 MMBtu/h to 25 MMBtu/h (HHV) with the fuel specified below.

The following conditions will apply to the above indicative guarantee:

1. The target fuel/air ratio for each burner is 10% - 15% excess air which is to be mixed with 10% Flue Gas Recirculation (FGR). Final settings of excess air and FGR will be determined by FivesNA upon commissioning and will be set to achieve emissions performance guarantees.
2. The fuel will be a mix of PUC quality natural gas and sulfur bearing, sweetened produced gas having a higher heating value of 1125 Btu/ft³, characterized below:

Fuel Composition:		Volume %
Percent Methane	(CH4):	75.52
Percent Ethane	(C2H6):	3.46
Percent Propane	(C3H8):	3.07
Percent n-Butane	(C4H10):	2.00
Percent n-Pentane	(C5H12):	2.41
Percent n-Hexane	(C6H14):	1.27
Percent Carbon Dioxide	(CO2):	11.10
Percent Nitrogen	(N2):	1.16
Equivalent Sulfur as H2S	(H2S):	0.021
Percent Total		100.000
Air/Fuel Ratio		10.66
Specific Gravity		0.819

3. The process temperature will not exceed 1600 °F.
4. A reaction chamber will be mounted in a horizontal steam generator with a radiant section tube ID of at least 9'-3" and a length of 39'.
5. Combustion air temperature will be 30°F to 115°F.
6. Combustion system control will include the latest version of the proprietary patented algorithms (8379-CMS-EMB-SW4 or higher) and a fully functional "mass flow control" fuel and air ratio system.
7. The emissions data will be obtained from a sample port at a point downstream of the exit of the burner reaction chamber.
8. The test data will be extracted from a single point and time averaged.

9. FivesNA will verify all emission levels noted above following start-up when the operating mode of the burner and combustion system is at steady state and absent of any pressure spikes in either the field supply or duct systems. Our standard service rates outlined in our Sheet M9P-S will apply. If no further testing is conducted as outlined in the attached **CONDITION AND LIMITS OF FIVES NORTH AMERICAN COMBUSTION. INC. ("FIVESNA") EMISSIONS LEVELS GUARANTEE (GRM12)**, this test will be sufficient to satisfy the guarantee.
10. A chemiluminescent NOx analyzer or other device suitable for measuring ultra-low NOx emission levels, supplied by others, must be made available to FivesNA at time of start-up.

No formal process or emissions guarantees are offered at this time. Warranties are only offered as part of an actionable, firm price proposal. All warranty issues will be addressed per FivesNA's Conditions and Limits and/or Standard Terms and Conditions which are attached.

Thank you for providing this opportunity to demonstrate the emission performance of our ultra low NOx partial lean burn GLE technology when applied to a steam generator. Please feel free to contact me if there are any questions concerning this letter or if we can be of any further assistance with your current combustion equipment needs.

Very truly yours,
FIVES NORTH AMERICAN COMBUSTION INC.

John M. Quiel

John M. Quiel
Manager, Oil Field Sales

CONDITIONS AND LIMITS
OF
FIVES NORTH AMERICAN COMBUSTION, INC. ("FivesNA")
EMISSIONS LEVELS GUARANTEE

September 2010

Any change in data or the process variables specific to this application, or failure to comply with any of the conditions and limits specified below, voids this guarantee.

The term "as specified," as used throughout this document, refers to the specification contained in the original quotation, and any subsequent changes for the same application as are made or agreed to in writing by FivesNA.

1. Firing chamber temperature must be as specified. This temperature is defined as that indicated by a thermocouple inserted into the firing chamber to a distance sufficient to eliminate refractory gradient error.

2. Flame envelope must neither be obstructed by other surfaces in the firing chamber nor intersected by other burner flames or uncontrolled air infiltration.

3. Air/fuel ratio must be set to, and remain at, the specified value, or range. In multi-zone, multi-burner firing chambers, a means for determining individual burner ratios must be provided.

4. Temperature of combustion air must not exceed that specified in the quotation.

5. Firing rate must be as specified.

6. Combustion chamber dimensions must be as specified.

7. Furnace pressure must not allow for air infiltration (in order to maintain overall furnace atmosphere).

8. Fuel analysis must be as specified. If a range of fuel compositions is provided, the tested composition must lie entirely within that range. No components are permissible in quantities above the maximum value, nor below the minimum value, specified.

9. Flue gas recirculation, where applicable, must be provided at the levels specified in the quotation and free of any particulate or known contaminants.

10. No emissions level guarantee is made as to NOx generated by chemically-fuel-bound-nitrogen unless specifically quantified in the quotation.

11. FivesNA's services must be contracted for emissions tuning of the system for guarantee to be valid.

12. Compliance testing of the system must be conducted within 60 days of initial start-up. Start-up must occur no later than 120 days from the date of shipment.

    Testing is to be accomplished by an independent authorized agency, agreed to by FivesNA, utilizing EPA-Method 7E. A copy of the full report is to be furnished to FivesNA. All costs of compliance testing, including recommended retests for reasons not attributable to FivesNA's system, shall be paid by Customer.

13. If any guaranteed emissions level is exceeded on start-up or at any point preceding successful compliance testing, FivesNA will, at its costs, make any and all adjustments and/or modifications to the burner that it deems appropriate and proper to reducing the emissions level to that guaranteed.

14. All guarantees contained in these conditions and limits shall end following completion of compliance testing and any retesting wherein all emission test points are documented to be at or below the guaranteed levels.

Flare Specification

16310 BRATTON LANE | BUILDING 3 #350 | AUSTIN, TX 78728

COMMERCIAL PROPOSAL

PROJECT NAME	EMERGENCY ENCLOSED FLARE
CUSTOMER NAME	AERA ENERGY LLC
CUSTOMER LOCATION	BAKERSFIELD, CA
END USER NAME	AERA ENERGY LLC
JOB SITE LOCATION	CALIFORNIA
PREPARED FOR	ERIC PAULSON T +1 661.665.5000 EWPAULSON@AREAENERGY.COM
SALES CONTACT	TIM EGAN BUSINESS DEVELOPMENT MANAGER CEB® OFFICE +1 512.836.9473 | MOBILE +1 404.386.2535 | AEREON.COM TEGAN@AEREON.COM
TECHNICAL CONTACT	MIRAGE THAKAR MANAGER OF APPLICATIONS ENGINEERING MTHAKAR@AEREON.COM
QUOTE NUMBER	13-1002 REV **2**
DATE	**NOVEMBER 11, 2015**

TABLE OF CONTENTS

SECTION PAGE

1.0 DESIGN CONDITIONS 3
2.0 SCOPE OF SUPPLY 4
2.1 ENCLOSED FLARE SCOPE OF SUPPLY 4
3.0 COMMERCIAL SUMMARY 5
3.1 COMMERCIAL SCOPE OF SUPPLY 5
3.2 VALIDITY 5
3.3 DELIVERY 6
3.4 SHIPPING TERMS 6
3.5 PACKING AND SHIPPING PREPARATION 6
3.6 TERMS OF PAYMENT 6
3.7 TECHNICAL ASSISTANCE FEES 7
3.8 DOCUMENTATION 7
3.9 QUALITY / NON-DESTRUCTIVE TESTING 8
3.10 CLARIFICATIONS 8
4.0 EXCLUSION LIST 8
4.1 FLARE TECHNICAL EXCLUSIONS 8
4.2 FLARE COMMERCIAL EXCLUSIONS 9

1.0 DESIGN CONDITIONS

GAS COMPOSITION	MOLE%	CASE 1
HYDROGEN	H_2	
OXYGEN	O_2	*0.65*
NITROGEN	N_2	*5.73*
AIR	$N_2 + O_2$	
CARBON DIOXIDE	CO_2	
AMMONIA	NH_3	
WATER	H_20	
CARBON MONOXIDE	CO	*20.56*
METHANE	CH_4	*69.02*
ETHANE	C_2H_6	
ETHYLENE	C_2H_4	
ACETYLENE	C_2H_2	
PROPANE	C_3H_8	*3.00*
PROPYLENE	C_3H_6	
I BUTANE	C_4H_{10}	*3.00*
N BUTANE	C_4H_{10}	
BUTENE	C_4H_8	
I PENTANE	C_5H_{12}	
N PENTANE	C_5H_{12}	
PENTENE	C_5H_{10}	
CYCLOPENTANE	C_5H_{10}	
METHYLCYCLOPENTANE	C_6H_{12}	
HEXANES	C_6H_{14}	
CYCLOHEXANE	C_6H_{12}	
METHYLCYCLOHEXANE	C_7H_{14}	
HEPTANE	C_7H_{16}	
CYCLOHEPTANE	C_7H_{14}	
HYDROGEN SULFIDE	H_2S	
1,2 BUTADIENE	C_4H_6	
1,3 BUTADIENE	C_4H_6	
BENZENE	C_6H_6	
TOLUENE	C_7H_8	
ETHYLBENZENE	C_8H_{10}	
STYRENE	C_8H_8	
XYLENE	C_8H_{10}	
OCTANE	C_8H_{18}	
N-NONANE	C_9H_{20}	
N-DECANE	$C_{10}H_{22}$	
METHANOL	CH_4O	
MAXIMUM FLOW RATE	MMSCFD	**1.34**
GAS TEMPERATURE	° F	80
SUPPLY PRESS3URE	PSIG	30
MOLECULAR WEIGHT	G/MOL	17.25
LOWER HEATING VALUE	BTU/SCF	*715*

THERMAL OUTPUT	
MAXIMUM OUTPUT	40 MMBTU/HR.
MINIMUM OUTPUT	4 MMBTU/HR.

EXPECTED EMISSIONS	
VOLATILE ORGANIC COMPOUND	0.1 LB/MMBTU
CARBON MONOXIDE	0.31 LB/MMBTU
NITROGEN OXIDES	0.068 LB/MMBTU
SOOT	MINIMAL

ELECTRICAL CLASSIFICATION	
BASE OF THE FLARE	*NOT CLASSIFIED*
CONTROL PANEL LOCATION	*NOT CLASSIFIED*

ENCLOSED FLARE UTILITIES REQUIRED	
ELECTRICITY	*1 PH/ 60 HZ/ 120 V*
PILOT GAS	*65 SCFH @ **8 PSIG***
PURGE GAS	*13 SCFH @ 15-150 PSIG*

TYPE OF FLARE	
☐ *ELEVATED*	☐*OFFSHORE*
☐ *BIO-GAS*	☐ *MULTI-POINT*
☒ *ENCLOSED FLARE*	☐ *PIT FLARE*
☐ *RENTAL*	☐ *PORTABLE*

ENCLOSED SUPPORT OF STRUCTURE	
☐ *SELF-SUPPORTED*	☐ *DERRICK SUPPORTED*
☐ *GUYED*	☒ *NONE*

ENCLOSED FLAME MONITORING SYSTEM	
☐ *THERMOCOUPLE*	☐ *INFRA RED MONITOR*
☐ *IONIZATION ROD*	☒ *ULTRAVIOLET SCANNER*

PLEASE TAKE YOUR TIME TO CAREFULLY REVIEW THE DESIGN CONDITIONS STATED ABOVE AND NOTIFY FLARE INDUSTRIES IMMEDIATELY IF ANY CONDITION DOES NOT MATCH YOUR LATEST REQUIREMENTS. THIS WILL HELP US TO REDUCE TURNAROUND TIME WHILE PROVIDING YOU A BETTER SERVICE, THANK YOU.

2.0 SCOPE OF SUPPLY

2.1 ENCLOSED FLARE SCOPE OF SUPPLY

ITEM	QTY.	ENCLOSED FLARE DESCRIPTION
1	1	AIR-ASSISTED FLARE TIP MODEL: MAVP-0416 DIAMETER: 4 INCH NOMINAL INCLUDES 16” AIR SHROUD FOR AIR DELIVERY LENGTH: 4 FT WELDED CONNECTION FOR GAS RISER 16” x 150# RFSO CONNECTION FOR AIR RISER FLAME RETENTION DEVICE: RETENTION TABS TIP MATERIALS: TOP 4 FOOT - 316 STAINLESS STEEL
2	1	ENCLOSED COMBUSTION CHAMBER ENCLOSURE DIAMETER: **84 INCH** OVERALL HEIGHT: 40 FT FLAME DETENTION DEVICE: UV FLAME DETECTOR INLET MATING FLANGE: 4 INCH X 150# RFSO CS LIFTING LUGS: TWO (2) OVER FIRE PROTECTION: ONE (1) TYPE K THERMOCOUPLE WITH THERMOCOUPLE PORT & THERMO-WELL ONE (1) 2INCH SIGHT GLASS PORTS TO VIEW BURNER & PILOT MATERIAL: CARBON STEEL THERMAL INSULATION: 3 INCH UP TO 8 FT ABOVE GRADE 2 INCH **FOR REMAINING HEIGHT**
3	1	PILOT MODEL: LUMINEX IGNITION METHOD: ELECTRONIC SPARK FLAME DETECTION DEVICE: UV SCANNER SUPPORT: FIXED MATERIALS: 310 SS HEAD/ 316 SS BODY
4	1	CONTROL PANEL ENCLOSURE RATING: NEMA 4X – SS WEATHER PROOF CONTROLS THERMOCOUPLE INDICATOR AND OVER FIRE ALARM PILOT MONITORING AND PILOT FAILURE ALARM & SHUTDOWN AUTOMATIC IGNITION & RE-IGNITION OF PILOT FLAME SAFEGUARD PILOT STATUS INDICATION FORM C DRY CONTACTS FOR CUSTOMER ALARMS

5	1	AIR BLOWER FOR AIR-ASSISTED FLARE TIP: 7.5 HP BLOWER PROVIDES AIR FOR SMOKELESSNES AND COMPLETE COMBUSTION BLOWER RATED FOR 4,500 CFM AT 6" W.C. STATIC PRESSURE VARIABLE FREQUENCY DRIVE (SHIPPED LOOSE) VFD CONTROLS BY OTHERS
6	1	LOUVERED COMBUSTION AIR CONTROL SYSTEM FULLY ADJUSTABLE AIR DAMPERS – FAIL OPEN THREE (3) LOUVERS LOCATED AT EQUAL SPACING MANUAL CONTROL ONLY – AUTOMATIC CONTROL NOT REQUIRED
7	1	4 IN INLET SHUTOFF VALVE (TO BE SHIPPED LOOSE AND INSTALLED BY OTHERS) WAFER STYLE BUTTERFLY VALVE WITH PNEUMATIC ACTUATOR AND ONE (1) PRESSURE REGULATOR MATERIAL: CS/BODY AND 316 INTERNALS
8	1	4 IN FLAME ARRESTOR (TO BE SHIPPED LOOSE AND INSTALLED BY OTHERS) ALUMINUM BODY/ ALUMINUM INTERNALS
9	3	FLARE INDUSTRIES OPERATION MANUALS: ADDITIONAL MANUALS - $300 MINIMUM EACH
		OPTIONS
10	1	PILOT GAS VALVE TRAIN: ALUMINUM BODY REGULATOR BALL VALVE AND STRAINER PRESSURE GAUGE
11	1	LADDERS AND PLATFORM PACKAGE ONE (1) 90° GALVANIZED WORKING PLATFORM PROVIDES ACCESS TO SAMPLE PORTS GALVANIZED CAGED LADDER ASSEMBLY ONE (1) GALVANIZED STEP-OFF PLATFORM

3.0 COMMERCIAL SUMMARY

3.1 COMMERCIAL SCOPE OF SUPPLY

DESCRIPTION	ITEM NO.	QTY.	PRICE (USD)
ENCLOSED FLARE	1-9	1	**$209,250.00**

OPTION FOR ENCLOSED FLARE	ITEM NO.	QTY.	PRICE (USD)
PILOT GAS VALVE TRAIN	10	1	$1,570.00
LADDERS AND PLATFORM PACKAGE FOR ENCLOSED FLARE	11	1	$21,725.00

3.2 VALIDITY

THE PRICES IN THIS QUOTATION ARE FIRM AND FIXED FOR 30 DAYS.

3.3 DELIVERY

APPROVAL DRAWINGS:	
A. P&ID(S)	2-3 WEEKS AFTER ACCEPTANCE OF ORDER
B. GA & ELECTRICAL	5-6 WEEKS AFTER APPROVAL OF P&IDS
CLIENT REVIEW:	2 WEEKS *
FABRICATION:	16-18 WEEKS AFTER RECEIVING THE APPROVED DRAWINGS
TOTAL DELIVERY TIME:	25-29 WEEKS ARO

THE QUOTED DELIVERY IS BASED UPON OUR CURRENT PRODUCTION SCHEDULE / SHOP LOAD. AN UPDATED DELIVERY SCHEDULE WILL BE AVAILABLE AT TIME OF ORDER.

* IF FLARE INDUSTRIES DOES NOT RECEIVE APPROVAL FOR CONSTRUCTION WITHIN 2 WEEKS OF INITIAL APPROVAL DRAWING SUBMITTAL, THE PRODUCTION SCHEDULE WILL BE SUBJECT TO CHANGE BASED UPON SHOP LOAD.

3.4 SHIPPING TERMS

☒ EX-WORKS: AUSTIN, TX
☐ EX-WORKS: POINT OF MANUFACTURE

3.5 PACKING AND SHIPPING PREPARATION

☒ INLAND FREIGHT PACKING
☐ EXPORT PACKING *
☐ STORAGE AND PRESERVATION CRATING - 90 DAYS MAXIMUM STORAGE

* EXPORT PACKING AND CRATING ONLY INCLUDES TECHNOLOGY ITEMS AND EXCLUDES STACKS, LADDERS AND PLATFORMS, VESSELS, SKIDS, AND UTILITY PIPING.

3.6 TERMS OF PAYMENT

PROGRESS PAYMENTS AS PER THE FOLLOWING*:

50%	UPON RECEIPT OF ORDER, NET 30
40%	UPON PROCUREMENT OF MAJOR MATERIALS AND PRIOR TO SHIPMENT, NET 30
10%	BEFORE SHIPMENT (EX-WORKS)

*PAYMENT TERMS ARE ONLY VALID AS LONG AS CLIENT IS APPROVED FOR CREDIT BY FI'S FINANCIAL INSTITUTION. THREE CREDIT REFERENCES AND FINANCIAL STATEMENTS MAY BE REQUESTED FOR THIS PURPOSE.

3.7 TECHNICAL ASSISTANCE FEES

	DOMESTIC (US ONLY)
DAILY LABOR RATE	$1,400.00
TRAVEL RATE	$1,400.00
OVERTIME RATE	$200.00/HOUR
TRAVEL EXPENSES	COST + 20%
STANDARD WORK DAY	8-HOUR DAY

*DAILY RATE INCLUDES ACCOMMODATIONS, GENERAL EXPENSES, SUBSISTENCE, TOLLS, & LOCAL TRANSPORTATION
**PLEASE SEE STANDARD TERMS AND CONDITIONS OF SALE

3.8 DOCUMENTATION

FLARE INDUSTRIES WILL PROVIDE THE FOLLOWING DOCUMENTATION ALONG WITH THE EQUIPMENT ON THIS PROJECT:

- ☒ PIPING AND INSTRUMENTATION DIAGRAM (P&ID)
- ☒ MECHANICAL GENERAL ARRANGEMENT
- ☒ OPERATING AND MAINTENANCE MANUALS (UPON SHIPMENT)
- ☐ LADDER LOGIC DIAGRAMS
- ☒ CONTROL ENCLOSURES DRAWINGS
- ☐ MANUFACTURING RECORD BOOKS (MRB)

3.9 QUALITY / NON-DESTRUCTIVE TESTING

- ☒ VISUAL INSPECTION
- ☒ DIMENSIONAL CHECK
- ☒ FACTORY ACCEPTANCE TEST: IGNITION SYSTEM ONLY
- ☒ DRY FILM THICKNESS: PAINTED CARBON STEEL COMPONENTS ONLY
- ☐ RADIOGRAPHY EXTENT:
- ☐ DYE PENETRANT EXAMINATION EXTENT:
- ☐ ULTRASONIC TESTING EXTENT:
- ☐ MAGNETIC PARTICLE EXAMINATION EXTENT:
- ☐ HYDRO-TESTING EXTENT:
- ☒ PNEUMATIC TESTING EXTENT: VALVE TRAINS ONLY, WHERE APPLICABLE
- ☐ HARDNESS/IMPACT TESTING:
- ☐ PMI:

3.10 CLARIFICATIONS

1. NO SPECS HAVE BEEN GIVEN A THIS TIME, CLIENT TO VERIFY AND CONFIRM DESIGN PARAMETERS.
2. AN ESTIMATED GAS LOWER HEATING VALUE (LHV) OF APPROXIMATELY 715BTU/SCF WAS CALCULATED, CLIENT TO VERIFY AND CONFIRM.

4.0 EXCLUSION LIST

THIS PROPOSAL IS OFFERED IN ACCORDANCE WITH THE BELOW EXCLUSIONS.

4.1 FLARE TECHNICAL EXCLUSIONS

1. CIVIL AND FOUNDATION DESIGN FOR ANY EQUIPMENT INCLUDING DEAD MEN, ANCHOR BOLTS OR NUTS, DESIGN OF ANCHOR BOLT LENGTH OR PROJECTION AS THIS IS PART OF CIVIL ENGINEERING FOUNDATION DESIGN.
2. THIS DESIGN IS EXCLUSIVE OF ALL EXTERNAL LOADINGS DUE TO UPSTREAM PIPING. WIND, SEISMIC AND TEMPERATURE LOADINGS HAVE BEEN CONSIDERED. ALLOWABLE NOZZLE LOADS OTHER THAN THOSE PUBLISHED BY API-537 ARE NOT CONSIDERED.
3. BOLT KITS AT BATTERY LIMIT FLANGED CONNECTIONS.
4. SUPPLY TO CUSTOMER OF SHOP DETAILS, FABRICATION DRAWINGS OR PROPRIETARY CALCULATIONS
5. INSTALLATION OF EQUIPMENT INCLUDING SUPPLY OF CRANES AND/OR PERSONNEL. GENERAL INSTALLATION INSTRUCTIONS AND ASSEMBLY DRAWINGS WILL BE PROVIDED, HOWEVER, DETAILED ERECTION INSTRUCTIONS AND DRAWINGS ARE EXCLUDED. THESE INSTRUCTIONS ARE MEANT TO PROVIDE GUIDANCE AND GENERAL STEPS TO COMPLETE THE INSTALLATION. THESE PROCEDURES ARE NOT INTENDED TO BE A SUBSTITUTE FOR EXPERIENCED INSTALLATION PERSONNEL. FIELD ASSEMBLY AND ERECTION OF THE FLARE IS OUTSIDE THE SCOPE OF WORK TO BE PROVIDED BY FLARE INDUSTRIES AND IS THE SOLE RESPONSIBILITY OF OTHERS. IT IS UNDERSTOOD THAT THE FIELD CONTRACTOR RETAINED FOR THIS PURPOSE IS FAMILIAR WITH THE ASSEMBLY AND ERECTION OF TALL TOWERS.
6. NO INTERCONNECTING PIPING, WIRE, OR CONDUIT IS INCLUDED BETWEEN PROPOSED EQUIPMENT, UNLESS OTHERWISE INDICATED IN THE SCOPE OF WORK SECTION OF PROPOSAL.
7. THE IGNITION SYSTEM / CONTROL PANEL / PILOTS AND RELATED VALVE TRAINS ARE A FLARE INDUSTRIES' STANDARD PACKAGE. AS SUCH, THEY ARE DESIGNED AND/OR MANUFACTURED ACCORDING TO OUR STANDARDS AND PROCEDURES, USING OUR STANDARD COMPONENTS. ALL VALVE TRAIN COMPONENTS HAVE THE FOLLOWING CHARACTERISTICS: ½ TO ¾ INCH DIAMETER THREADED FITTINGS, CARBON STEEL CONSTRUCTION. NO OTHER MATERIALS, DIAMETERS, FLANGE RATINGS, PIPING SPECIFICATIONS, OR

ADDITIONAL MATERIALS OR INSTRUMENTATION ARE INCLUDED, NOR DO ANY CLIENT SUPPLIED SPECIFICATIONS APPLY, UNLESS SPECIFICALLY AGREED TO IN WRITING BY FLARE INDUSTRIES.

8. ALL CALCULATIONS, ENGINEERING, AND SIZING PROVIDED IN OUR PROPOSAL ARE PRELIMINARY AND MAY CHANGE DURING DETAILED ENGINEERING. OPTIMIZATION OF THE DESIGN DURING PROJECT PHASE ENGINEERING MAY OCCUR AND IS NOT SUBJECT TO A REDUCTION IN PRICE.
9. DISPERSION CALCULATIONS, NOZZLE LOAD CALCULATIONS, FINITE ELEMENT ANALYSIS OR OTHER STRESS ANALYSIS, APART FROM STRUCTURAL CALCULATIONS OF THE STACK.
10. STRUCTURAL CALCULATIONS WILL BE SUBMITTED FOR INFORMATION ONLY, NOT BEING SUBJECT TO THE APPROVAL PROCESS.
11. CORROSION ALLOWANCE FOR CARBON STEEL IS 1/16 INCH ON WETTED PARTS AND 0 FOR AIR RISERS AND/OR AIR ANNULUSES. NO OTHER CORROSION ALLOWANCE IS APPLICABLE TO OUR DESIGN OR SCOPE OF WORK.
12. STANDARD DEFLECTION CRITERION FOR GUYED STACKS IS L/100 AND FOR SELF SUPPORTED STACKS AND DERRICKS IS L/133. NO OTHER DEFLECTION CRITERIA ARE APPLICABLE.
13. NACE COMPLIANT CARBON STEEL IS NOT INCLUDED, UNLESS SPECIFICALLY MENTIONED UNDER THE SCOPE OF WORK SECTION OF THE PROPOSAL.
14. IF NACE COMPLIANT CARBON STEEL IS PROPOSED, MATERIALS WHICH EXCEED THE REQUIREMENTS OF NACE MR-01-75 ARE NOT CONSIDERED.
15. PASSIVATION OR PICKLING OF STAINLESS STEEL MATERIALS OR PROCEDURE, POST WELD HEAT TREATMENT, PROCEDURES, OR ASSOCIATED CHARTS.
16. LOW TEMPERATURE CARBON STEEL IS NOT INCLUDED, UNLESS SPECIFICALLY MENTIONED UNDER THE SCOPE OF WORK SECTION OF THE PROPOSAL.
17. ANY TESTING OR PROCEDURES NOT MARKED AS INCLUDED IN THE QUALITY / TESTING SECTION OF PROPOSAL.
18. FLARE INDUSTRIES' STANDARD WELD PROCEDURES APPLY TO OUR EQUIPMENT, UNLESS OTHERWISE STATED IN OUR PROPOSAL. ANY REQUEST TO ALTER OR MODIFY OUR CURRENT WELD PROCEDURES BASED UPON CLIENTS' INTERNAL SPECIFICATIONS IS CURRENTLY EXCLUDED FROM OUR SCOPE OF SUPPLY. IF NEW PROCEDURES ARE REQUESTED BY THE CLIENT, PRICE AND DELIVERY IMPACT WILL APPLY.
19. HYDRO-TESTING OR PROCEDURES OF ANY PIECE OF EQUIPMENT OTHER THAN STAMPED ASME PRESSURE VESSELS, UNLESS SPECIFICALLY INDICATED IN THE PROPOSAL.
20. FLARE STACKS ARE OPEN TO ATMOSPHERE; MAXIMUM DESIGN PRESSURE IS CONSIDERED TO BE 14.5 PSIG. DESIGN PRESSURES ABOVE 14.5 PSIG ARE EXCLUDED.
21. PAINTING OR COATING FOR STAINLESS STEEL, INTERNAL SURFACES OF EQUIPMENT OR GALVANIZED EQUIPMENT.
22. EXTERNAL INSULATION, INSULATION CLIPS OR HEAT TRACING OF ANY KIND. REFRACTORY OR INSULATION IS INCLUDED FOR ENCLOSED COMBUSTION DEVICES.
23. ARMORED CABLE OR CABLE TRAY OF ANY KIND. WE ARE SUPPLYING OUR STANDARD WIRE AND CONDUIT WITHIN OUR BATTERY LIMITS.
24. MATERIAL CERTIFICATION AS PER BSEN 10204, 3.2 (FORMERLY 3.1A AND 3.1C).

4.2 <u>FLARE COMMERCIAL EXCLUSIONS</u>

1. WHEREAS REGARDS STATEMENTS IN CLIENT SPECIFICATIONS OR PURCHASE ORDERS CONCERNING SPECIFICATION ORDER OF PRECEDENCE, PLEASE BE ADVISED THAT FLARE INDUSTRIES' PROPOSAL, INCLUDING ITS INTEGRAL EXCLUSION LIST, PRECEDES AND PRECLUDES ALL OTHER DOCUMENTS OR AGREEMENTS WHETHER WRITTEN OR VERBAL.
2. FREIGHT COSTS AND LOGISTICS WILL BE OFFERED TO OUR CLIENTS AS AN OPTIONAL PRICE OR AS PART OF THE BASE PRICE, BUT NOT AT COST AS THE PHRASE "PREPAY AND ADD" IS SOMETIMES INTERPRETED.
3. FLARE INDUSTRIES STRICTLY PROHIBITS THE USE OR SALE OF OUR EQUIPMENT IN COUNTRIES SANCTIONED BY THE UNITED STATES GOVERNMENT SUCH AS: IRAN, SYRIA, SUDAN, NORTH KOREA, AND CUBA.
4. THIRD PARTY INSPECTION
5. ALL DOCUMENTATION WILL BE SUPPLIED IN ACROBAT PDF FORMAT, NOT WORD, EXCEL, AUTOCAD, OR ANY OTHER FORMAT.

6. PLEASE NOTE THAT DOCUMENTATION AND DRAWING DELIVERY DATES ARE AS STATED IN OUR PROPOSAL, HOWEVER, IF A VDS APPLIES TO THE PROJECT, ALL DELIVERY DATES MUST BE AGREED TO IN WRITING ON A DOCUMENT BY DOCUMENT BASIS.
7. DOCUMENTATION LEGALIZATION COSTS.
8. OUR OPERATING AND MAINTENANCE MANUALS AND QUALITY DOSSIERS WILL BE PROVIDED IN THE ENGLISH LANGUAGE. TRANSLATION OF THE O&M MANUALS IS AVAILABLE AT AN ADDITIONAL COST, HOWEVER, ONLY TEXT GENERATED BY FI WILL BE TRANSLATED. DRAWINGS, CUT SHEETS, DATA SHEETS AND/OR STANDARD DOCUMENTS WILL BE PROVIDED IN ENGLISH.
9. NO FI PRESENCE AT MEETINGS (INCLUDING, BUT NOT LIMITED TO, KICK-OFF MEETINGS, HAZOP MEETINGS, DRAWING REVIEW AND INSPECTION / CERTIFICATION MEETINGS) IS INCLUDED, UNLESS EXPLICITLY MENTIONED IN THE PROPOSAL.
10. SPARE PARTS WHEN QUOTED DO NOT INCLUDE CROSS SECTIONAL DRAWINGS, EXPORT PACKING OR FREIGHT.
11. THERE ARE NO BANK GUARANTEES, PERFORMANCE BONDS, OR WARRANTY BONDS INCLUDED IN OUR SCOPE OF SUPPLY OR PRICE. COST FOR THESE REQUIREMENTS WILL BE ADDED ON TO OUR BASE PRICE QUOTED AS OPTIONS. ALL BOND AND/OR BANK GUARANTEE FORMATS, IF APPLICABLE, MUST BE AGREED TO IN WRITING BY FLARE INDUSTRIES.
12. STORAGE OF EQUIPMENT AFTER NOTIFICATION OF READINESS FOR SHIPMENT.

AEREON

16310 BRATTON LANE | BUILDING 3 #350 | AUSTIN, TX 78728

November 11, 2015

RE: Emergency Flare System for T.J. Cross/Vogelsang [FI Ref: 13-1009 AERA Energy]

To whom it may concern:

Flare Industries, an *AEREON* company, has proposed a **84"** outer diameter x 40 ft tall fully enclosed flare, model **FEF-84** for the above-mentioned project.

The proposed flare system is expected to achieve at least 98% destruction efficiency for volatile organic compounds, and the emissions from the flare system are expected to be less than the numbers stated below:

Component	**Emission Factor (lb/10^6 Btu)**
Volatile Organic Compound	0.10
Carbon Monoxide	**0.31**
Nitrogen Oxides	0.068
Soot	Minimal

Please contact the undersigned in case of questions.

Best regards,

Mirage Thakar
Manager of Applications Engineering
Austin, Texas

Letter Rev. 2

Flow Meter Specification

Product Data Sheet
December 2012
00813-0100-4738, Rev JB

Rosemount 3095 MultiVariable™ Transmitter with MODBUS® Protocol

CE

The Proven Leader in MultiVariable Measurement

- Industry leading performance with ±0.05% of DP reading accuracy
- Ten year stability under actual process conditions
- Unprecedented reliability backed by a limited 12-year warranty
- Four outputs from one device including Mass Flow and advanced data logging
- Easy integration with MODBUS protocol
- Coplanar™ platform enables DP Flowmeters

ROSEMOUNT

EMERSON.
Process Management

Rosemount 3095 Product Overview

Industry leading performance with ±0.05% of DP reading accuracy

Enabled by superior sensor technology and engineered for optimal flow performance, the 3095FB delivers unprecedented reference accuracy with up to 100:1 rangeability. Superior performance results in increased measurement accuracy.

Ten year stability of 0.25%

Through aggressive testing, the 3095FB has proven its ability to maintain unprecedented performance under the most demanding conditions. Superior transmitter stability decreases calibration frequency for reduced maintenance and operation costs.

Unprecedented reliability backed by a limited 12-year warranty

Further enhance installation practices with the most reliable platform supported by a 12-year warranty.

Four outputs from one device

The advanced MultiVariable device measures three process variables simultaneously with optional calculated mass flow and advanced data logging capabilities. One device installation means reduced process penetrations, reduced inventory, and reduced installations costs.

Easily integrated with MODBUS communications

Designed for easy integration with Supervisory Control and Data Acquisition units (SCADA), Distributed Control Systems (DCS), Flow Computers or Programmable Logic Controllers (PLC) and capable of multi-dropping up to 32 transmitters on one RS-485 bus. Easy integration reduces engineering and installation costs.

Coplanar platform enables DP flowmeters

The flexible coplanar platform allows integration with the complete offering of Rosemount primary elements for any flow application. The solution arrives factory calibrated, pressure-tested, and ready to install right out of the box. Only Rosemount has a scalable coplanar transmitter design to reduce engineering and inventory costs.

Contents

Ordering information . . . . . page 3
Specifications . . . . . page 7
Product certifications . . . . . page 11
Dimensional drawings . . . . . page 13

Ordering information

Table 1. Rosemount 3095F MultiVariable Transmitter Ordering Information

			— Not available	
			3095FB	**3095FC**
Code	**Product Description**			
Standard			Standard	Standard
3095F	MultiVariable Transmitter		★	★
Code	**Output**			
Standard			Standard	Standard
B	Process Variable Measurement: Modbus RS-485		★	—
C	Process Variable Measurement: Mass Flow and Data Logging, Modbus RS-485		—	★
Code	**Differential Pressure Ranges**			
Standard			Standard	Standard
2	0–2.5 to 0–250 inH_2O (0–6,23 to 623 mbar)		★	★
3	0–10 to 0–1000 inH_2O (0–25 mbar to 0–2,5 mbar)		★	★
Code	**Static Pressure Ranges**			
Standard			Standard	Standard
3	0.5–8 to 0.5–800 psia (0,03–0,552 to 0,03–55,2 bar)		★	★
4	0.5–36.26 to 0.5–3626 psia (0,03-2,5 to 0,03–250 bar)		★	★
C	0–8 to 0–800 psig (0–0,552 to 0–55,2 bar)		★	★
D	0–36.26 to 0–3626 psig (0-2,5 to 0–250 bar)		★	★
Isolator Material		**Fill Fluid**		
Standard			Standard	Standard
A	316L SST	Silicone	★	★
B(1)	Alloy C-276	Silicone	★	★
J(2)	316L SST	Inert	★	★
K(1)(2)	Alloy C-276	Inert	★	★
Expanded				
F	Gold-Plated 316L SST	Silicone		
D(3)	Tantalum	Silicone		—
L(3)	Tantalum	Inert		—
Flange Style		**Material**		
Standard			Standard	Standard
A	Coplanar	CS	★	★
B	Coplanar	SST	★	★
C	Coplanar	Alloy C-276(1)	★	★
J	DIN Compliant Traditional Flange, SST 10 mm Adapter/Manifold Bolting	SST, 7/16 - 20 Bolting	★	★
0	None		★	★
Drain/Vent Material				
Standard			Standard	Standard
A	SST		★	★
C(1)	Alloy C-276		★	★
0	None		★	★

Table 1. Rosemount 3095F MultiVariable Transmitter Ordering Information

			— Not available	
			3095FB	**3095FC**
O-ring				
Standard			Standard	Standard
1	Glass-filled PTFE		★	★
Process Temperature Input				
Standard			Standard	Standard
0	Fixed Process temperature (No Cable)		★	★
1	RTD Input with 12 ft. (3,66 m) of Shielded Cable		★	—
2	RTD Input with 24 ft. (7,32 m) of Shielded Cable		★	—
7	RTD Input with 75 ft. (22,86 m) of Shielded Cable		★	—
3	RTD Input with 12 ft. (3,66 m) of Armored, Shielded Cable		★	—
4	RTD Input with 24 ft. (7,32 m) of Armored, Shielded Cable		★	—
8	RTD Input with 75 ft. (22,86 m) of Armored, Shielded Cable		★	—
A	RTD Input with 12 ft. (3,66 m) of ATEX/IECEx Flameproof Cable		★	—
B	RTD Input with 24 ft. (7,32 m) of ATEX/IECEx Flameproof Cable		★	—
C	RTD Input with 75 ft. (22,86 m) of ATEX/IECEx Flameproof Cable		★	—
Code	**Transmitter Housing Material**	**Conduit**		
Standard			Standard	Standard
A	Polyurethane-covered Aluminum	1/2–14 NPT	★	★
B	Polyurethane-covered Aluminum	M20 x 1.5 (CM20)	★	★
E	Polyurethane-covered Aluminum	3/4–14 NPT	—	★
J	SST	1/2–14 NPT	★	—
K	SST	M20 x 1.5 (CM20)	★	—
Code	**Terminal Block**			
Standard			Standard	Standard
A	Standard		★	—
B	With Integral Transient Protection		★	★
C	CE MARK/ Compliant with EMC - Transient Protection Included		★	—
Code	**Display**			
Standard			Standard	Standard
0	None		★	★
1	LCD Display		★	★
Code	**Bracket**			
Standard			Standard	Standard
0	None (required for option code S3 or S5)		★	★
1	Coplanar SST Flange Bracket for 2-in. Pipe or Panel Mount, SST Bolts		★	★
2	Traditional Flange Bracket for 2-in. Pipe Mounting, CS Bolts		★	★
3	Traditional Flange Bracket for Panel Mounting, CS Bolts		★	★
5	Traditional Flange Bracket for 2-in. Pipe Mounting, 300 Series, SST Bolts		★	★
6	Traditional Flange Bracket for Panel Mounting, 300 Series, SST Bolts		★	★
8	SST Traditional Flange Bracket for 2-in. Pipe Mounting, 300 Series, SST Bolts		★	★
9	SST Traditional Flange Flat Bracket for 2-in. Pipe Mounting, 300 Series, SST Bolts		★	★

Table 1. Rosemount 3095F MultiVariable Transmitter Ordering Information

		— Not available	
		3095FB	**3095FC**
Code	**Bolts**		
Standard		Standard	Standard
0	CS bolts	★	★
1	Austenitic 316 SST bolts	★	★
N	None	★	★
Code	**Approvals**		
Standard		Standard	Standard
0	None	★	★
A	FM Explosion-proof, Dust Ignition-proof	★	—
C	CSA Explosion-proof, Dust Ignition-proof, Division 2	★	—
M	CSA Explosion-proof (United States and Canada)	—	★
H	ATEX Flameproof	★	★
P	ATEX Dust	★	—
7	IECEx Flameproof	★	—
8	IECEx Dust	★	—
Code	**Engineered Measurement Solution**		
Standard		Standard	Standard
N	Direct Process Variable Measurement: *MODBUS* (Required for 3095FB)	★	—
C	Mass Flow with Process Variable Measurement & Data Logging: *MODBUS* (Required for 3095FC)	—	★

Options (Include with selected model number)

Configuration			
Standard		Standard	Standard
C1[(4)]	Custom Configuration (Requires Completed Configuration Data Sheet)	★	★
Process Adapter			
Standard		Standard	Standard
DF[(5)]	1/2-14 NPT Process Adapter,Type Determined by Selected Flange Material: Plated CS, SST, Cast C-276	★	★
Material Traceability Certification			
Standard		Standard	Standard
Q8	Material Traceability Certification per EN 10204 3.1	★	★
Calibration Certificate			
Standard		Standard	Standard
Q4	Calibration Data Sheet	★	★
Pressure Testing			
Standard		Standard	Standard
P1	Hydrostatic Testing with Certificate	★	★
Cleaning			
Standard		Standard	Standard
P2	Cleaning for Special Services	★	★

Table 1. Rosemount 3095F MultiVariable Transmitter Ordering Information

		— Not available	
		3095FB	**3095FC**
Integral Manifold			
Standard		Standard	Standard
S3[6]	Assemble to Rosemount 405 Compact Orifice	★	—
S5[6]	Assemble to 305 Integral Manifold	★	★
Primary Element			
Standard		Standard	Standard
S4[6][7]	Assemble to Rosemount 485 or Rosemount 1195	★	—
Communication Board			
Standard		Standard	Standard
A1	Additional RS-232 Communication Board	—	★
Power Options			
Standard		Standard	Standard
A2	12 Vdc System with Batteries	—	★
A3	Mast with Solar Panel Assembly and 12 Vdc Batteries	—	★
Performance Class			
Standard		Standard	Standard
U3[8]	Ultra for Flow: 0.05% DP Reading Accuracy, Up to 100:1 Rangedown, 10 Yr Stability, 12 Yr Warranty	★	—
Typical Model Number: 3095F B 2 3 A B A 1 1 A B 0 1 0 A N			

(1) Materials of Construction comply with metallurgical requirements highlighted within NACE MR0175/ISO 15156 for sour oil field production environments. Environmental limits apply to certain materials. Consult latest standard for details. Selected materials also conform to NACE MR0103 for sour refining environments.

(2) Only available with C or D Gage Sensor Modules.

(3) Not available with Absolute / Gage Pressure Ranges C or D.

(4) 3095FC only allows all English or all Metric units.

(5) Not available with S4 option.

(6) "Assemble-to" items are specified separately and require a completed model number.

(7) With a primary element installed, the maximum operating pressure will be the lesser of either the transmitter or the primary element.

(8) Ultra for Flow (Option U3) applicable for 3095FB DP ranges 2 and 3 with SST isolator material and silicone fill fluid only.

Specifications

Functional Specifications

Service

3095FB

- Gas, Liquid, or Steam
- DP, P, and T with MODBUS output

3095FC

- AGA 8 Natural Gas, AGA 3 Orifice Plates
- Consult factory for other fluid and primary element combinations
- DP, P, T, mass flow, and API compliant data log with MODBUS output

Differential Sensor

Limits

- Range 2: –250 to 250 inH_2O (-623 to 623 bar)
- Range 3: –1000 to 1000 inH_2O (-2,49 to 2,49 bar)

Absolute Sensor

Limits

- Range 3: 0.5 to 800 psia (0,03 to 55,2 bar)
- Range 4: 0.5 to 3,626 psia (0,03 to 250 bar)

Gage Sensor

Limits

- Range C: 0 to 800 psig (0 to 55,2 bar)
- Range D: 0 to 3,626 psig (0 to 250 bar)

Over Pressure Limit

0.5 psia (0,03 bar) to two times the absolute pressure sensor range up to a maximum of 3,626 psia (250 bar).

Static Pressure Limit

Operates within specifications between static line pressures of 0.5 psia (0,03 bar) and the URL of the absolute pressure sensor.

Power

3095FB

- Quiescent supply current 10 mA typical. Transmitting supply current not to exceed 100 mA.
- External power supply required
- Transmitter: operates on terminal voltage of 7.5 - 30 Vdc

3095FC

- Transmitter: operates on terminal voltage of 8 - 28 Vdc
- Input current: 5mA nominal, 9.5 mA at 100% duty cycle (battery charging not included)
- Internal battery: rechargeable, Nominal 6.2 Vdc (2.5 Amp/hr)
- Maximum power consumption: 19 watts
- Solar panel input: nominal 8 V to 200 mA
- Solar panel output: 2 watts, 9 V nominal
- External charging input: 12 Vdc max (8 - 10 Vdc nominal)

RS-485 Signal Wiring

2-wire half-duplex RS-485 *MODBUS* with 8 data bits, 1 stop bit, and no parity

Bus Terminations

Standard RS-485 bus terminations required per EIA-485.

Failure Mode Alarm

If self-diagnostics detect a gross transmitter failure, non-latched status bits are set in the transmitter alarm registers.

Humidity Limits

3095FB

- 0 – 100% relative humidity

3095FC

- 0 – 95%, non condensing

Communications

PC-Based User Interface Software

Baud Rate: 3095FB - 1200 to 9600 User selectable
3095FC - 600 to 19.2K User selectable

Host: 3095FB - RS485 (MODBUS)
3095FC - RS485 (MODBUS) or RS-232 Direct Connect

User Interface Software and Hardware Requirements:

3095FB

- IBM-compatible PC
- 10 MB of available hard drive space
- Microsoft® Windows® 98 or higher operating system
- CD-ROM drive
- 32 MB of RAM

3095FC

- IBM-compatible PC
- 1 MB of RAM
- Pentium-grade processor: 233 MHz or faster
- Microsoft Windows 98 or higher operating system
- CD-ROM drive

Temperature Limits

Process (at transmitter isolator flange for atmospheric pressures and above):

3095FB

- With standard Silicon Fill Sensor: –40 to 250 °F (–40 to 121 °C)
- Inert Fill Sensor: 0 to 185 °F (-18 to 85 °C).
- Process temperatures above 185 °F (85 °C) requires derating the ambient limits by a 1.5:1 ratio.

3095FC

- With standard Silicon Fill Sensor: –40 to 212 °F (–40 to 100 °C)
- Inert Fill Sensor: 0 to 185 °F (-18 to 85 °C).
- Process temperatures above 185 °F (85 °C) requires derating the ambient limits by a 1.5:1 ratio.

Ambient:

3095FB

- With Standard Silicon Fill Sensor: –40 to 185 °F (–40 to 85 °C)
- With LCD Display[1]: -40 to 175 °F (-40 to 80 °C)

3095FC

- –40 to 167 °F (–40 to 75 °C)
- With LCD Display: -4 to 167 °F (-20 to 75 °C)

Storage:

3095FB

- –50 to 212 °F (–46 to 100 °C)
- With LCD Display: -40 to 185 °F (-40 to 85 °C)

3095FC

- –50 to 185 °F (–46 to 85 °C)
- With LCD Display: -40 to 185 °F (-40 to 85 °C)

(1) LCD Display may not be readable and LCD updates will be slow at temperatures below -4 °F (-20 °C).

Turn-on Time

Process variables will be within specifications less than 4 seconds after power is applied to transmitter.

Damping (3095FB only)

Response to step input change can be user-selectable from 0.1 to 30 seconds for one time constant. This is in addition to sensor response time of 0.2 seconds.

Filtering (3095FC only)

Response to step input change can be filtered by user entered percentage of add value to be used.

(Last Value X Entered %) + [New Value X (100 - Entered %)] = Filtered Value

Real Time Clock (3095FC only)

- Year / month / day / hour / minute / second
- Battery backed

Performance Specifications

(Zero-based spans, reference conditions, silicone oil fill, 316 SST isolating diaphragms, and digital trim values equal to the span end points.)

Specification Conformance

The Rosemount 3095 maintains a specification conformance of measured variables to at least 3σ.

Differential Pressure

Range 2

0–2.5 to 0–250 inH_2O (0-6,23 to 623 mbar)
(100:1 rangeability is allowed)

Range 3

0–10 to 0–1000 inH_2O(0-25 mbar to 0-2,5 bar)
(100:1 rangeability is allowed)

Accuracy (including Linearity, Hysteresis, Repeatability)

Range 2-3: 3095FB Ultra for Flow (Option U3)[1]

- ±0.05% of DP reading up to 3:1 DP turndown from URL
- For DP turndowns up to 100:1 from URL

$$\text{Accuracy} = \pm \left[0.05 + 0.0145\left(\frac{\text{URL}}{\text{DP Reading}}\right)\right] \text{ \% of DP Reading}$$

Range 2-3: 3095FB and 3095FC

- ±0.075% of span for spans from 1:1 to 10:1 URL
- For spans less than 10:1 rangedown

$$\text{Accuracy} = \pm\left[0.025 + 0.005\left(\frac{\text{URL}}{\text{Span}}\right)\right] \text{\% of span}$$

Ambient Temperature Effect per 50 °F (28 °C)

Range 2-3: 3095FB Ultra for Flow (Option U3)[1]

- ±0.130% of DP reading up to 3:1 DP turndown URL
- ±[0.05 + 0.0345 (URL/DP Reading)]% of DP Reading up to 100:1 DP turndown from URL

Range 2-3: 3095FB and 3095FC

- ±(0.025% URL + 0.125% span) spans from 1:1 to 30:1
- ±(0.035% URL - 0.175% span) spans from 30:1 to 100:1

Static Pressure Effects

- Zero error = ±0.05% of URL per 1000 psi (68,95 bar)
- Span error = ±0.20% of DP Reading per 1000 psi (68,95 bar)

Stability

Range 2-3: 3095FB Ultra for Flow (Option U3)[1]

- ±0.25% of URL for 10 years for ±50 °F (28 °C) temperature changes, and up to 1000 psi (68,95 bar) line pressure

Range 2-3: 3095FB and 3095FC

- ±0.125% of URL for five years for ±50 °F (28 °C) ambient temperature changes, and up to 1000 psi (68,95 bar) line pressure.

Absolute/Gage Pressure

Absolute (100:1 rangeability allowed)

Range 3

0.5–8 to 0.5–800 psia (0,03-0,552 to 0,03-55,2 bar)

Range 4

0.5–36.26 to 0.5–3,626 psia (0,03-2,5 to 0,03-250 bar)

Gage (100:1 rangeability allowed)

Range C

0–8 to 0–800 psig (0-0,552 to 0-55,2 bar)

Range D

0–36.26 to 0–3,626 psig (0-2,5 to 0-250 bar)

Ambient Temperature Effect per 50 °F (28 °C)

- ±(0.05% URL + 0.125% of span) spans from 1:1 to 30:1
  ±(0.06% URL – 0.175% of span) spans from 30:1 to 100:1

(1) Ultra for Flow (Option U3) applicable for 3095FB DP ranges 2 and 3 with SST isolator material and silicone fill fluid only.

Stability
±0.125% of URL for five years for ±50 °F (28 °C) ambient temperature changes.

Accuracy (including Linearity, Hysteresis, Repeatability)
- ±0.075% of span for spans from 1:1 to 10:1 of URL
- For spans less than 10:1 rangedown,

$$\text{Accuracy} = \pm\left[0.03 + 0.0075\left(\frac{\text{URL}}{\text{Span}}\right)\right]\% \text{ of span}$$

Process Temperature (RTD)
Specification for process temperature is for the transmitter portion only. Sensor errors caused by the RTD are not included. The transmitter is compatible with any PT100 RTD conforming to IEC 751 Class B, which has a nominal resistance of 100 ohms at 0 °C and $\propto$ = 0.00385. Examples of compatible RTDs include the Rosemount Series 68 and 78 RTD Temperature Sensors.

Sensing Range
3095FB
- –300 to 1500 °F (–184 to 816 °C)

3095FC
- –40 to 464 °F (–40 to 240 °C)

Accuracy (including Linearity, Hysteresis, Repeatability)
- ±1.0 °F (0.56 °C) for process temperatures from –300 to 1200 °F (–184 to 649 °C)
- For process temperatures above 1200 °F (649 °C), add ±1.0 °F (0.56 °C) per 100 °F (38 °C)

Ambient Temperature Effects per 50 °F (28 °C)
3095FB
- ±0.72 °F (0.40 °C) for process temperatures from –40 to 185 °F (–40 to 85°C)
- (±1.28 °F (0.72 °C) + 0.16% of reading) for process temperatures from 185 to 1500 °F (85 to 816 °C)

3095FC
- ±0.90 °F (0.50 °C) for process temperatures from –40 to 464°F (–40 to 240°C)

Stability
±1.0 °F (0.56 °C) for one year

Physical Specifications
Electrical Connections
- ½–14 NPT, M20 x 1.5 (CM20), PG-13.5
- $^3/_4$–14 NPT (3095FC only)

RTD Process Temperature Input:
100-ohm platinum RTD per IEC-751 Class B

Process Connections
- Transmitter: ¼–18 NPT on $2^1/_8$-in. centers
- RTD: RTD dependent (see ordering information)

Radiated/Conducted Transmissions
Meets requirements of IEC 61326

Process Wetted Parts
Isolating Diaphragms
- 316L SST or Alloy C-276

Drain/Vent Valves
- 316 SST or Alloy C-276

Flanges
- Plated carbon steel, 316 SST, or Cast C-276

Wetted O-rings
- Glass-Filled PTFE

Non-Wetted Parts
Electronics Housing
- Low copper aluminum

Bolts
- Plated carbon steel per ASTM A449, Grade 5; or austenitic 316 SST

Fill Fluid
- Silicone oil
- Inert oil (available for gage pressure ranges only)

Paint
- Polyurethane

O-rings
- Buna-N

Battery (3095FC only)
- Lead-acid, rechargeable

Weight

Components	Weight in lb. (kg)	
	3095FB	3095FC
3095 Transmitter	6.0 (2.7)	11.5 (5.2)
LCD Meter	0.5 (0.2)	0.6 (0.3)
SST Mounting Bracket	1.0 (0.5)	1.0 (0.5)
12 ft (3.66 m) RTD Shielded Cable	0.5 (0.2)	–
12 ft (3.66 m) RTD Armored Cable	1.1 (0.5)	–
24 ft (7.32 m) RTD Shielded Cable	1.0 (0.4	–
24 ft (7.32 m) RTD Armored Cable	2.2 (1.0)	–
75 ft (22.86 m) RTD Shielded Cable	1.9 (0.9)	–
75 ft (22.86 m) RTD Armored Cable	7.2 (3.2)	–
12 ft (3.66 m) RTD ATEX/IECEx Cable	2.1 (0.9)	–
24 ft (7.32 m) RTD ATEX/IECEx Cable	3.0 (1.4)	–
75 ft (22.86 m) RTD ATEX/IECEx Cable	4.8 (2.2)	–
Battery / Solar panel	–	2.0 (0.9)
Battery Backup	–	1.3 (0.6)

3095FC Memory Specifications
Programmable Memory
2 MB x 8 flash EPROM

Data Memory
512 kB SRAM

Boot Memory
128 kB flash EPROM

History Database

The history database archives measured and calculated values for on-demand viewing or saving to a file. Each point in the historical database can be configured to archive the current value, average value, totalized value, or accumulated value.

Up to 35 standard history points provided, with archiving of min/max (for today and yesterday), minute (for last 60 minutes), hourly and daily values (for last 35 days). The first 8 of these are non-configurable.
Up to 15 extended history points provided with archiving of up to 5040 entries at 1, 2, 3, 4, 5, 10, 12, 15, 20, 30, or 60 minute intervals.

Memory Logging

- 240 alarms before rollover
- 240 events before rollover

3095FC Flow Specifications

Flow Calculation:

- Computed in accordance with ANSI/API 2530-92 (AGA 3, 1992), API 14.2 (AGA 8, 1992), and API 21.1. Detail, Gross I, Gross II.

Product certifications

Approved Manufacturing Locations

Rosemount Inc. — Chanhassen, Minnesota USA

European Directive Information

The EC declaration of conformity for all applicable European directives for this product can be found on the Rosemount website at www.rosemount.com. A hard copy may be obtained by contacting our local sales office.

ATEX Directive (94/9/EC)

Emerson Process Management complies with the ATEX Directive.

European Pressure Equipment Directive (PED) (97/23/EC)

3095F_2/3,4/D Flow Transmitters — QS Certificate of Assessment - EC No. PED-H-100 Module H Conformity Assessment

All other 3095_ Transmitters/Level Controller — Sound Engineering Practice

Transmitter Attachments: Process Flange - Manifold — Sound Engineering Practice

Electro Magnetic Compatibility (EMC) (2004/108/EC)

3095F Flow Transmitters - EN61326-1:2006, EN61326-2-3:2006

Ordinary Location Certification for Factory Mutual

As standard, the Rosemount 3095FB transmitter has been examined and tested to determine that the design meets basic electrical, mechanical, and fire protection requirements by FM, a nationally recognized testing laboratory (NRTL) as accredited by the Federal Occupational Safety and Health Administration (OSHA).

Hazardous Locations Certifications

North American Certifications

FM Approvals

A 3095FB
Explosion Proof for Class I, Division 1, Groups B, C, and D. Dust-Ignition Proof for Class II/III, Division 1, Groups E, F, and G, hazardous locations. Factory Sealed. Provides non-incendive RTD connections for Class I, Division 2, Groups A, B, C, and D. Install per Rosemount drawing 03095-1025. Enclosure Type 4X.

Canadian Standards Association (CSA) - Canada only

C 3095FB
Explosion-Proof for Class I, Division 1, Groups B, C, and D. Dust-Ignition Proof for Class II/III, Division 1, Groups E, F, and G, hazardous locations. CSA enclosure Type 4X. Factory Sealed. Provides a non-incendive RTD Connection for Class I, Division 2, Groups A, B, C, and D. Suitable for use in Class I, Division 2, Groups A, B, C, and D. Install in accordance with Rosemount Drawing 03095-1024.

Canadian Standards Association (CSA) - U.S. and Canada

M 3095FC
Explosion-Proof for Class I, Division 1, Groups C and D including optional solar panel: mast option: Suitable for use in Class I, Division 2, Groups A, B, C, D, and T3. CSA Enclosure Type 4.

European Certifications

H ATEX Flameproof
3095FB
Certificate Number: KEMA02ATEX2320X Ⓔx II 1/2 G
EEx d IIC T5 (-50°C ≤ T_{amb} ≤ 80°C)
T6 (-50°C ≤ T_{amb} ≤ 65°C)

V_{max} = 55V dc
CE 1180
Special Conditions for Safe Use (x):

The device contains a thin wall diaphragm. Installation, maintenance, and use shall take into account the environmental conditions to which the diaphragm will be subjected. The manufacturer's instructions for installation and maintenance shall be followed in detail to assure safety during its expected lifetime.

3095FC
Certificate Number: LCIE05ATEX6057X Ⓔx II 2 G
EEx d IIB T5
V_{max} = 28V dc
IP66
CE 1180
Special Conditions for Safe Use (x):

Operating ambient temperature: -40°C to 75°C

The users have to make sure that the thermal fluid transfer doesn't overheat the equipment to a temperature corresponding to the spontaneous combustion temperature of surrounding gas.

P ATEX Dust
3095FB
Certificate Number: KEMA02ATEX2321 Ⓔx II 1 D T90°C
Ambient Temp (-50°C ≤ T_{amb} ≤ 80°C)
V = 55 Vdc MAX
I = 23 mA MAX
IP66
CE 1180

IECEx Certifications

7 IECEx Flameproof
3095FB
Certificate Number: IECEx KEM 06.0018
Zone 0/1 Ex d IIC T6 (-20°C ≤ T_a ≤ 65°C)
Zone 0/1 Ex d IIC T5 (-20°C ≤ T_a ≤ 80°C)
V_{max} = 55 Vdc
I_{max} = 23 mAdc

8 IECEx Dust
3095FB
Certificate Number: IECEx KEM 06.0018
Ex tD A22 T90°C
IP66

Dimensional drawings

Exploded View of 3095FB Transmitter

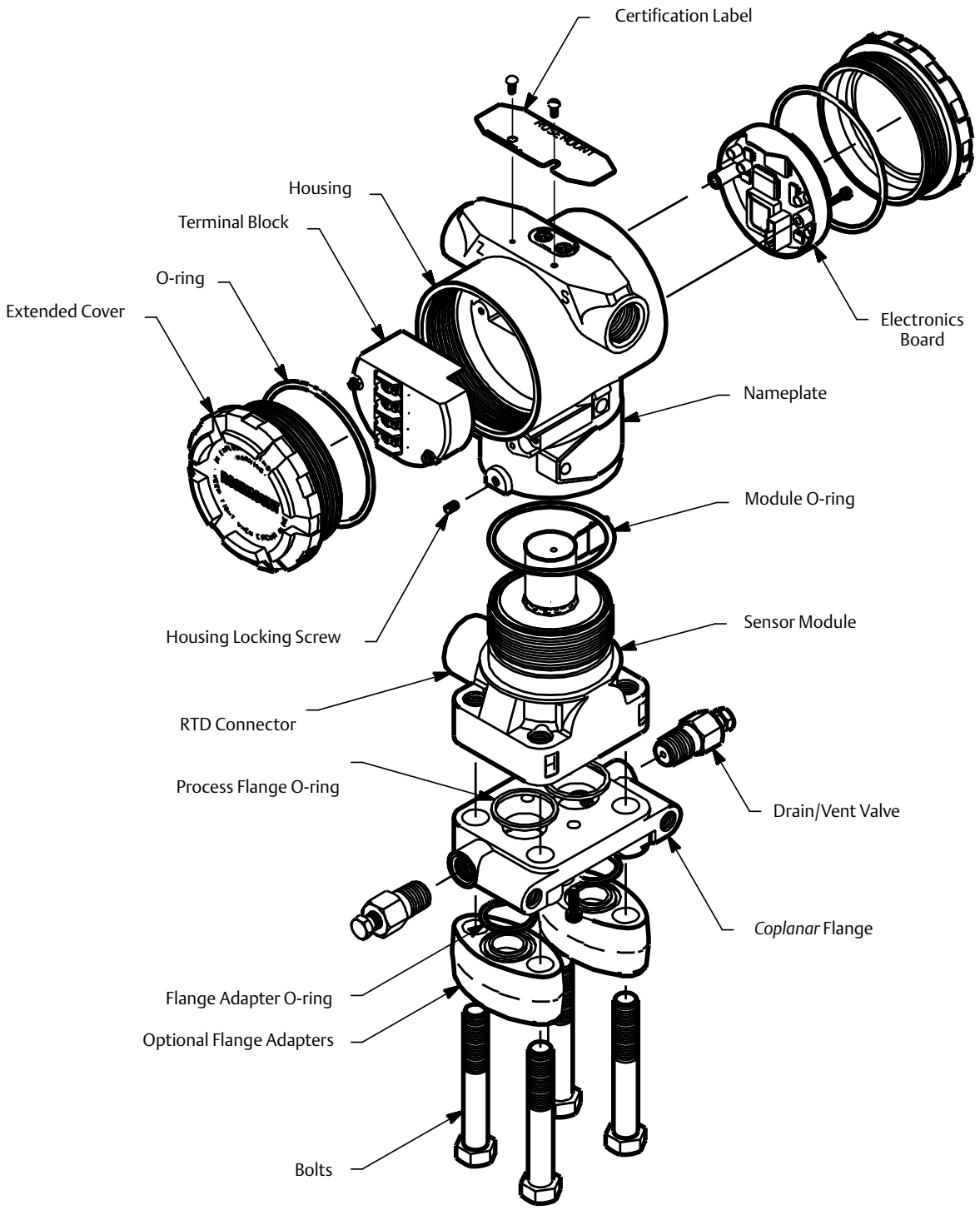

3095FB

Side View

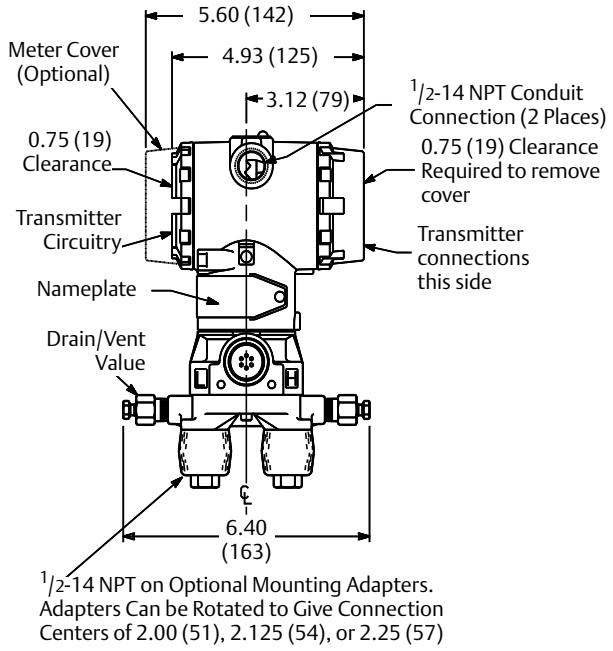

Front View

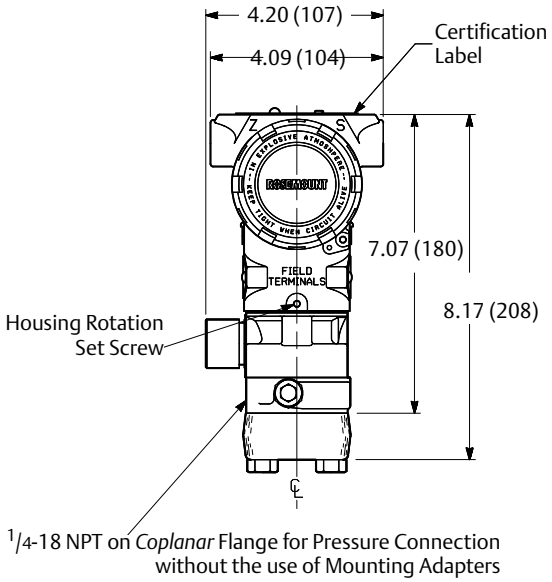

Dimensions are in inches (millimeters)

Mounting Configurations for 3095FB Transmitter

Panel Mount

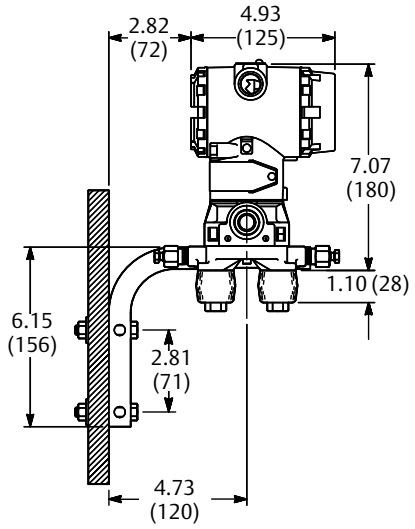

Pipe Mount

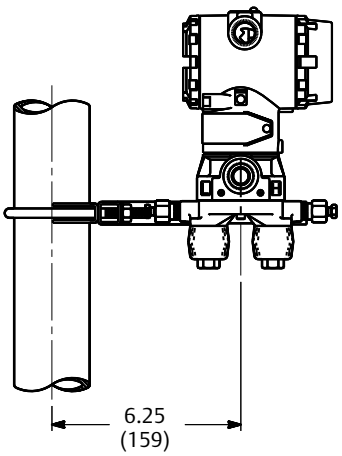

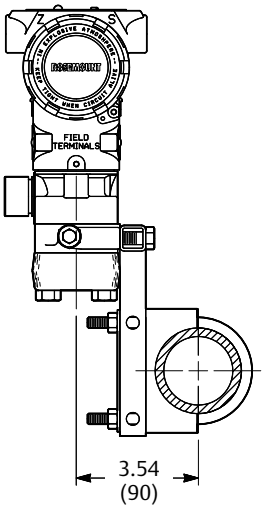

Dimensions are in inches (millimeters)

3095FC

Side View	Front View
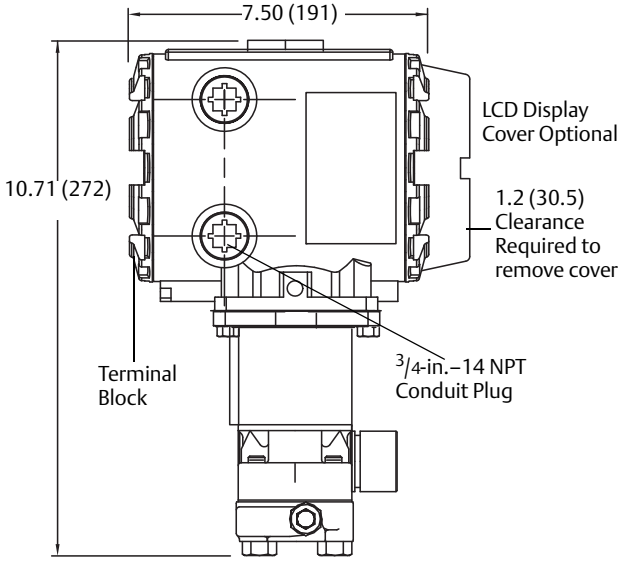	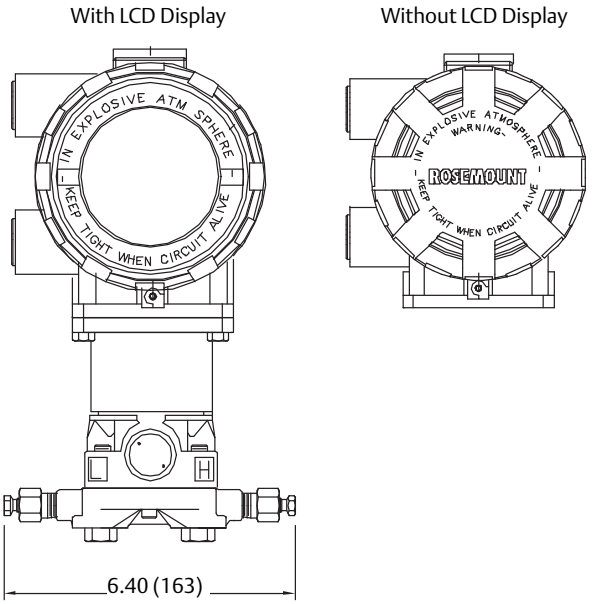

Dimensions are in inches (millimeters)

3095FC with Solar Panel Assembly

Side View	Front View
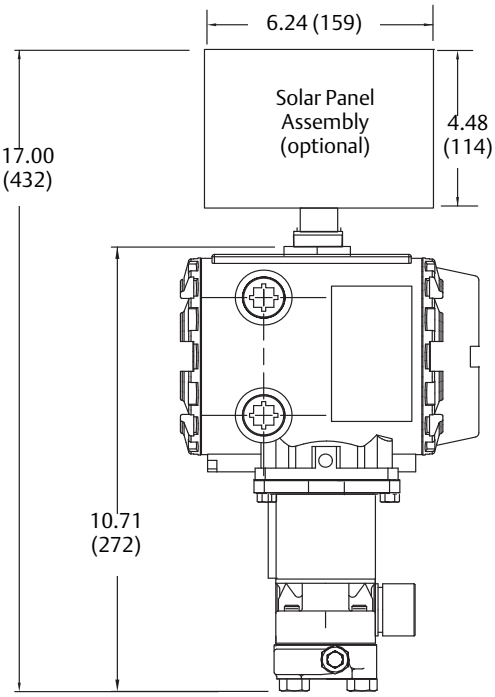	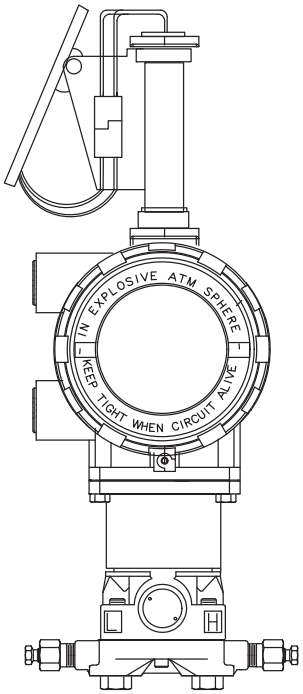

Dimensions are in inches (millimeters)

Mounting Configurations for 3095FC Transmitter		
Panel Mount	**Pipe Mount**	
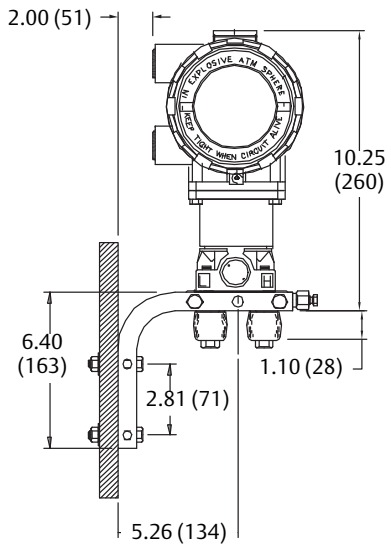	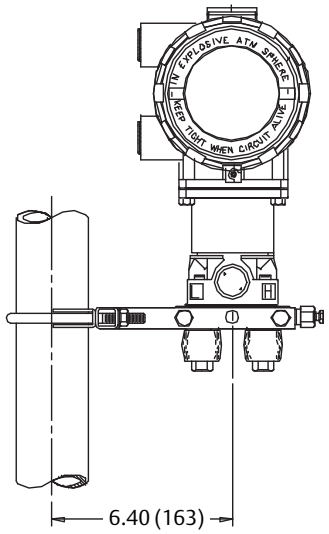	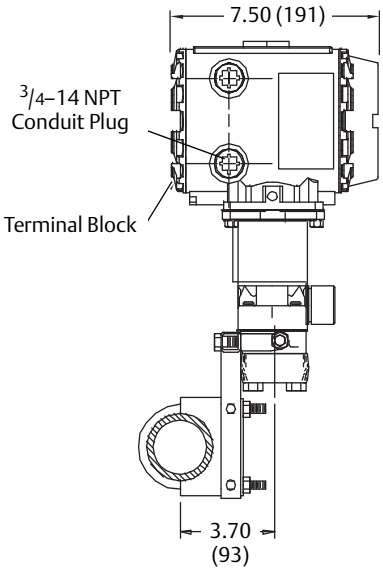
Dimensions are in inches (millimeters)		

Options

Standard Configuration

Unless otherwise specified, the transmitter is shipped as follows:

Engineering units:	
Differential	inH_2O
Absolute/gage	psi
Output:	MODBUS RTU protocol signal
Flange type:	Specified model code option
Flange material:	Specified model code option
O-ring material:	Specified model code option
Drain/vent:	Specified model code option
Flow Configuration Parameters:	Factory default
Software tag:	(Blank)

Custom Configuration (Option Code C1)[1]
If Option Code C1 is ordered, the user-specified information and standard configuration parameters are factory configured. Unspecified parameters will remain at the factory default settings.

(1) 3095FC only allows all English or all Metric units.

Tagging

Three customer tagging options are available:

- Standard SST tag is wired to the transmitter. Tag character height is 0.125 in. (3.18 mm),
  85 characters maximum.
- Tag may be permanently marked on transmitter nameplate upon request.
  Tag character height is 0.0625 in. (1.59 mm),
  65 characters maximum.
- Tag may be stored in transmitter memory. Software tag is left blank unless specified.
- Software tag is left blank unless specified.

Optional 305 Integral Manifolds

The Rosemount MultiVariable transmitters with 305R Integral Manifold are fully assembled, calibrated, and seal tested by the factory. Refer to PDS 00813-0100-4733 for additional information.

Accessories

3095 User Interface Software Packages

The User Interface software package is available with or without the converter and connecting cables. All configurations are packaged separately.

Windows 98 or higher

3095FB

- Part Number 03095-5130-0003: Windows User Interface Software–Single PC License, Converter, and Cable.
- Part Number 03095-5125-0004: Windows User Interface Software–Single PC License.
- Part Number 03095-5125-0005: Windows User Interface Software–Site License.
- Part Number 03095-5106-0002: RS-485 Converter and Cable.

3095FC

- Part Number 03095-5136-0001: Windows User Interface Software–Single PC License, and Cable.
- Part Number 03095-5135-0001: Windows User Interface Software–Single PC License.
- Part Number 03095-5135-0002: Windows User Interface Software–Site License.
- Part Number 03095-5106-0003: 10 foot (3.05 m) 9-pin Serial Cable (For direct connect method)

Emerson Process Management
Rosemount Inc.
8200 Market Boulevard
Chanhassen, MN 55317 USA
T (U.S.) 1-800-999-9307
T (International) (952) 906-8888
F (952) 906-8889
www.rosemount.com

Emerson Process Management
Blegistrasse 23
P.O. Box 1046
CH 6341 Baar
Switzerland
T +41 (0) 41 768 6111
F +41 (0) 41 768 6300
www.rosemount.com

Emerson Process Management
Blegistrasse 23
P.O. Box 1046
CH 6341 Baar
Switzerland
T +41 (0) 41 768 6111
F +41 (0) 41 768 6300
www.rosemount.com

Emerson Process Management
Asia Pacific Pte Ltd
1 Pandan Crescent
Signapore 128461
T +65 6777 8211
F +65 6777 0947
Service Support Hotline: +65 6770 8711
Email: Enquiries@AP.EmersonProcess.com
www.rosemount.com

Emerson Process Management
Blegistrasse 23
P.O. Box 1046
CH 6341 Baar
Switzerland
T +41 (0) 41 768 6111
F +41 (0) 41 768 6300
www.rosemount.com

Emerson Process Management
Blegistrasse 23
P.O. Box 1046
CH 6341 Baar
Switzerland
T +41 (0) 41 768 6111
F +41 (0) 41 768 6300
www.rosemount.com

Standard Terms and Conditions of Sale can be found at www.rosemount.com\terms_of_sale
The Emerson logo is a trade mark and service mark of Emerson Electric Co.
Rosemount and the Rosemount logotype are registered trademarks of Rosemount Inc.
PlantWeb is a registered trademark of one of the Emerson Process Management group of companies.
HART and WirelessHART are registered trademarks of the HART Communication Foundation
Modbus is a trademark of Modicon, Inc.
All other marks are the property of their respective owners.
© 2012 Rosemount Inc. All rights reserved.

ROSEMOUNT

EMERSON.
Process Management

ST100 Series Flare Gas Flow Meters

FLUID COMPONENTS INTERNATIONAL LLC

Flow Meter Solutions for Land Based and Offshore Platform Flares

Flaring systems are used to burn-off and dispose of waste, excess or off-gases, and as a safety system to protect processes and equipment. They are found throughout the world in oil and gas processing systems, refineries and petrochemical plants. Flare flow meters are a critical component used in these systems to monitor, measure and report the gas flows within these systems. Flare flow meters provide plant operations with a tool to signal abnormal process changes, early leak detection, and report on flared gases to comply with environmental agency reporting.

ST100 Series Flare Gas Flow Meters

- **Oil, gas, petrochemical plant flares and feed lines**
- **LP and HP flare applications**
- **Environmental agency and emission trading compliance with exclusive SR2x™ option**
- **Lowest total installed cost solution**
- **Flow range from 0.25 SFPS to 1000 SFPS [0,07 NMPS to 305 NMPS]**
- **Mixed hydrocarbon gases calibration**
- **Up to five (5) separate, unique calibrations**
- **Direct mass flow measuring; no need for temperature and pressure sensors**
- **Up to 1000:1 turndown**
- **Patented in-situ calibration verification option**
- **Analog outputs or digital bus communications**
- **Global agency approvals for Ex installations**
- **Exclusive dual-element systems for larger flare lines**
- **All stainless steel enclosure option for offshore installations**
- **Auxiliary input channels for interface with gas analyzers**

FCI has been a leading provider of flare gas flow meter solutions for more than two decades. FCI flow meters are installed in both land-based and offshore platform flare systems throughout the world. The new ST100 Series flow meters leverage these experiences with extensive features and functions that extend and optimize their application in flare flow measurement.

Whether your flares are single-line or a large flaring system with a complex array of tributary lines and mixed gases, there is an FCI solution. From superior low flow measurement to detect the smallest leaks and up to 1000 SFPS [305 NMPS] to accurately measure major upset conditions at very high flows, FCI ST100 Series flow meters are your best solution.

The ST100 Series flow meters combine a broad range of easy to install insertion flow elements with industry's most powerful and flexible electronics/transmitter and specialized, precision flare gas calibrations. With wide turn downs, specific calibrations for mixed gas compositions, FCI exclusive SR2x split-range/dual calibration (see page 3), and maximum output flexibility with 4-20 mA analog outputs or bus communications such as HART, FOUNDATION™ fieldbus, or Modbus, ST100 Series delivers a truly state-of-the-art gas flow meter for industrial process, plant and offshore flare applications.

ST100 Series Features

Four conduit ports provide greatest signal integrity and separation for power input, analog output lines, digital I/O, relays and/or auxiliary input signals; choice of NPT or M20 threads

AC or DC power supply

Weather-proof, ruggedized, Ex rated enclosures
- Choices for local or remote mounting
- NEMA 4X, IP67
- Aluminum or optional all stainless steel

Global agency approvals of entire instrument system for hazardous location installations:

FM, FMc, ATEX, IEC, NEPSI, CPA, Inmetro, GOST*

Multiple calibrations
- Up to five independent, separate calibrations
- Same gas, different flow range to optimize accuracy and extend turndown up to 1000:1
- Exclusive SR2x™ split range/dual calibration

Precision calibration and calibration choices
- Specific gas and application matched calibration in FCI NIST traceable facility

Extensive selection of process connections
- Retractable packing gland assemblies
- Fixed connections
- ANSI or DIN flanges
- Simple, adjustable installation with threaded NPT connector

Stainless steel or Hastelloy-C276 wetted parts

Remote up to 1000' [300 m]

Extensive analog and digital communications output choices
- Triple 4-20 mA with HART
- FOUNDATION™ fieldbus H1
- PROFIBUS PA
- Modbus RS-485
- 0-1 kHz or 0-10 kHz frequency or pulse
- Dual relays
- USB port
- Ethernet

On-board data logger

Four (4) optical touch buttons
- Proximity activation, no need to open enclosure
- Full instrument programmability
- Protected against unwanted activation

Comprehensive informational display
- Digital readout of all measured parameters; flow rate, total flow, temperature and pressure with engineering units
- Analog flow rate bar graph
- Alarm relay status indication
- Instrument fault indication
- User programmable 17 character field *(example: display gas type, tag number or application/location)*
- Display orientation rotates in 90° increments electronically
- Backlighted: auto-on activation via proximity sensor or set for always on

Multi-function: measures mass flow rate and temperature; STP Series adds pressure measurement

Permanent laser-etched depth gauge markings; ensures accurate centering of adjustable-length elements

All welded sensor elements for maximum service life and leak-proofing

Precision, wide-ranging platinum RTD sensors

Exclusive equal mass sensors provide optimum performance in processes with wide temperature swings

Choice of flow element styles to optimize application performance
- FP style *(shown)*
- S style

* *Some approvals pending at time of publication; contact FCI for most current status*

FCI Exclusive Split-range, Dual Calibration – SR2x™
(Environmental Agency and Emissions Trading Compliance)

Many oil & gas operations, refineries and chemical plants have flare applications uniquely challenged with two diverse flow conditions, very low flow under normal conditions and very high flow during an upset/blowdown condition. These industries are then further challenged to comply with environmental agencies and emissions trading regulations for their flares stipulating flow meter accuracy of ±5% of reading throughout the entire measuring range. FCI answers this challenge with our exclusive SR2x split-range/dual calibration option in the ST100 Series which provides:

- **Split ranges:** Two separate and discrete ranges, one optimized in the low flow range and one optimized in the high flow range
- **Double calibration points** strategically placed and optimized in the low flow range and high flow range to achieve ±0.75% reading, ±0.5% of full scale to a maximum of ±5% of reading
- **Dual 4-20mA analog outputs:** One dedicated to the low flow range and the other to high flow range; this ensures maximum resolution of both the low flow and high flow range at the DCS, or, if any of the bus communications are specified, a single, contiguous high accuracy digital value over the entire flow range is sent to the DCS

When your flare application is characterized by this difficult low flow/high flow situation, FCI's ST100 Series will provide a regulatory compliant, exclusive thermal dispersion flow meter solution.

FCI Flare Gas Flow Meter Users *(partial list)*

ADGAS
AERA ENERGY
ALLIED PETRO-CHEMICAL LLC
AMERADA HESS
AMOCO TRINIDATE OIL CO
ANADARKO
ANKOR ENERGY LLC
AOC TEXAS CITY
APACHE
ARKEMA
ATLAS PIPELINE
ATOFINA
ATOFINA PETRO-CHEMICALS
BAPCO
BASF CORP
BAYER MATERIAL SCIENCE
BG EXPLORATION
BOAP OLEFINS
BOSNA -S OIL
BP
BUMI CARE OFFSHORE PRODUCTION
CARMEL OLEFINS
CENEX
CEPSA
CHEVRON
CHEVRON PHILLIPS
CHEVRON TEXACO
CONOCO PHILLIPS
DAQING PETRO-CHEMICAL
DEVON CANADA
DOW
DYNEGY
E.I. DUPONT
EASTMAN CHEMICAL
EL PASO PRODUCTION CO
ELK CITY OKLAHOMA PIPELINE
EMPRESA PETRO
EQUILON ENTERPRISES
EQUISTAR CHEMICALS
ERG
ETHYL PETROLEUM ADDITIVES INC
EVALCO
EXCELVER CORP
EXTERRAN
EXXON MOBIL
EXXON MOBIL CHEMICAL
FOREST OIL
FORTISTAR METHANE GROUP
FRONTIER EL DORADO REFINING
GASCO
GODLEY GAS PLT
GULF ISLAND LLC
GULF LIQUIDS LLC
HILDALGO PLATFORM
HITCO CARBON COMPOSITES INC
HOLLY REFINING & MARKETING
HOUSTON REFINING
HUNTSMAN
INDIAN OIL CORP
INNOVENE USA LLC
INVISTA INC
IOCL
KHALDA PETROLEUM
KINDER MORGAN
KUWAIT NATIONAL PETROLEUM
KUWAIT OIL CO
LASMO
LDH ENERGY
LUBRIZOL
MARKWEST ENERGY
MARTIN MIDSTREAM
MARYSVILLE HYDROCARBONS
MERIT ENERGY
MILLENIUM PETROCHEMICALS
MM PRIMA DESHECHA ENERGY LLC
MOBIL CHEMICAL INC
MOTIVA
ENTERPRISES
MURPHY EXPLORATION
NAM
NEO TAUNTON LLC
NORCO / RESOLUTION LLC
OIL REFINERIES LTD
ONEOK
ONGA
ONGC
ORICA CHEMICALS
ORIGIN ENERGY
PAN AMERICAN ENERGY
PASADENA HYDROGEN PLANT
PECTEN CAMEROON CO
PEMEX
PENN WEST PETROLEUM LTD
PERTAMINA
PETROBRAS
PETROFAC
PETRONAS
PETROZUATA
POLIMERI
PPG INDUSTRIES
QUIMEX
REPSOL
SABIC
SABINE PLANT
SAUDI ARAMCO
SECCO
SHANGHAI PETROCHEMICAL
SHELL
SHELL CHEMICAL
SICHUAN PETROCHEMICAL
SINCLAIR REFINERY
SINOPEC YANGZI PETROCHEMICAL
SIPETROL
SOLUTIA INC
SOLVAY
SOMERSET ENERGY REFINING
SUNCOR
SYNERGAS
TALISMAN ENERGY
TARGA RESOURCES
TENNESSE GAS PIPELINE
TESORO
TEXAS EASTMAN
TOTAL
TOTAL PETRO-CHEMICALS
UNION CARBIDE
UNITED GASCO
VALERO
VENOCO
WILLIAMS FIELD SERVICES
WRB REFINING LLC
YANSHAN PETROCHEMICAL
ZHAIKMUNAI OIL

Examples of Performance in 0.25 SFPS to 400 SFPS [0.08 NMPS to 122 NMPS]

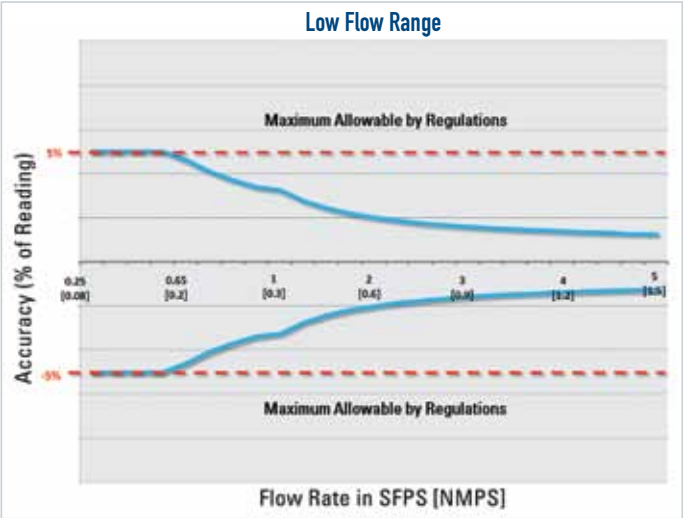

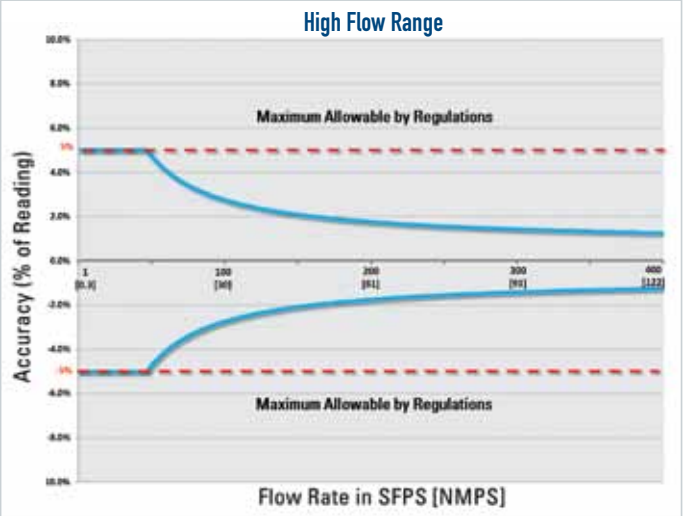

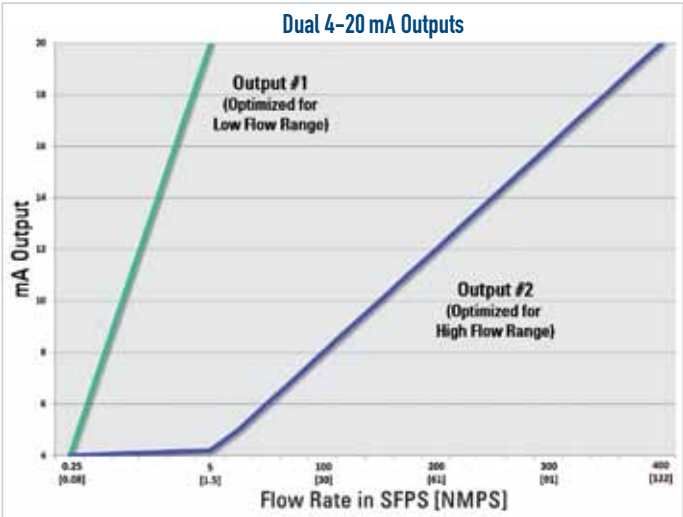

Dual-Element Systems

In pipe sizes larger than 16 inches [406 mm] a dual-element averaging system may provide better measurement performance and a more viable solution when it is impractical or impossible to provide the required straight-run or installation of a flow conditioner is difficult. ST100 Series models ST102A, ST112A, STP102A, and STP112A are dual-element averaging systems.

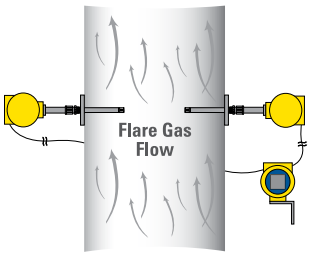

To determine if your flare meter application will benefit from using a dual-element averaging design, submit an FCI application data sheet or use AVAL, FCI's online flow meter sizing tool.

Communicate the Flow

Local readout, multiple 4-20 mA analog outputs, digital bus communications including HART, FOUNDATION™ fieldbus, Modbus and more, are all available with ST100 Series to provide the flare flow data to you and your systems. There is simply no other flare meter with the comprehensive selection of interfaces as ST100 Series. And, should you ever want to change or upgrade, ST100 is field upgradeable to any of the available outputs.

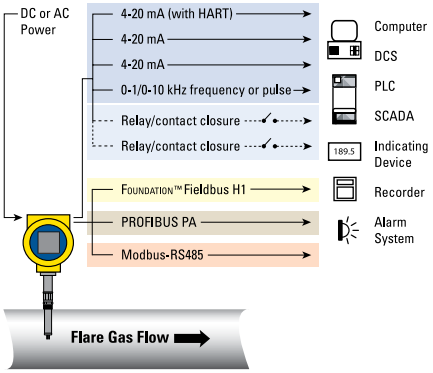

VeriCal™ In-Situ Calibration Verification

Many flare meter installations, either per plant edict or for compliance with environmental regulations, require regular validation of calibration. Traditionally this has required a cumbersome and costly project to remove the meter from service and return it to a lab, which is particularly frustrating if the meter is found to still be within calibrated specifications. FCI's exclusive VeriCal option eliminates the need for unnecessary de-installation. The VeriCal system provides a simple-to-use tool to verify the FCI flow meter is still within calibration without extracting the meter from pipe. The VeriCal system consists of a special VeriCal ready flow sensor, a portable VeriCal Kit (which can be used with any number of VeriCal-ready ST100 flow meters) and an additional benchmark calibration document to which field verification samples are compared. For more detailed information on VeriCal, please refer to FCI ST100 Series brochure.

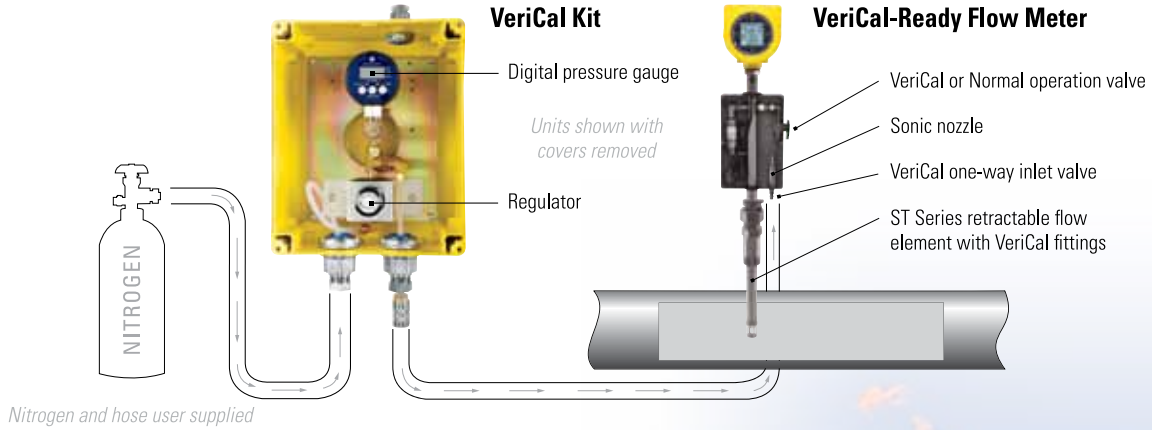

Nitrogen and hose user supplied

"FCI flow meters have been providing accurate and easy-to-obtain venting data at our offshore facilities."

– M. Skaer, Facilities Engineer
ANKOR Energy LLC

Flare gas applications present several unique challenges to plant, process and instrument engineers when selecting a flow meter solution. These can include many or even all of the following:

- **Both low and high flow conditions –** low flow sensitivity is critical to capture leaking relief valves and sensing air leaking into system, and very high flows occur during upset conditions
- **Mixed gases –** flow meter calibration specifically for hydrocarbon composition gases and matched to actual process conditions
- **Large pipe sizes –** as line sizes increase effective and suitable flow metering technologies decrease
- **Lack of available straight-run –** larger line size and limited real estate, particularly on off-shore platforms, are restrictive to providing required straight-run to achieve repeatable flow metering accuracy
- **Compliance with local environmental regulations –** meet performance and calibration procedures mandated within local regulations such as US EPA's 10 CFR 40; 40 CFR 98; EU Directives 2003/87/EC and 2007/589/EC; US MMR 30 CFR Part 250, Subpart K, Section 250 and others
- **Limited access –** Pipe access and reaccess for installation, maintenance or servicing is difficult; spool-piece flow meters may require prolonged process shut-down and extensive on-site labor costs to install
- **Agency approvals for installation in hazardous (Ex) locations –** The entire flow metering instrument should carry agency approval credentials for installation in environments with potential hazardous gases; enclosure only ratings are inadequate (and risky)
- **Offshore platforms corrosive salt water –** offshore platform may require use of stainless steel on all exposed instrument materials, including sensors, process connections and enclosures

Key Criteria For Flare Flow Meter Selection

- Meet local environmental agency requirements for accuracy and periodic calibration verification
- Wide turndown for both low flow and high flow conditions
- Certified calibration for mixed hydrocarbon flare gases
- Multiple calibrations for variations in composition
- Direct mass flow measurement
- Easy to install, minimal penetration points
- Non-clogging, non-fouling, no moving parts design for lowest maintenance
- Agency approved for installation in explosive gas classified environments
- Stainless steel wetted parts and optional stainless steel process connections and enclosure housings

Comparison of Flow Meters Applied in Flares

	FCI Thermal Dispersion	Ultrasonic	Optical
Purchase Cost	$	$ $ $	$ $
Installation Costs	$	$ $ $ $	$ $
Single Insertion Tap Installation	✔		✔
Sensor Alignment Critical		✔	
Flow Range ≥328 FPS [100 MPS]	✔ 1000 FPS [305 MPS]	✔ 394 FPS [120 MPS]	✔ 500 FPS [150 MPS]
Turn-down to 1000:1	✔	✔	✔
Direct Mass Flow Measuring	✔	NO *(Additional expense, process tap points and wire-ups for temperature and pressure sensors)*	NO *(Additional expense, process tap points and wire-ups for temperature and pressure sensors)*
Meets Environmental Agency Specifications for Accuracy	✔	✔	✔
SR2x™ Split-Range, Dual Calibration	✔	NO	NO
Temperature Service to 850 °F [454 °C]	✔	NO 536 °F [280 °C]	NO 212 °F [100 °C]
Pressure Service to 1000 psi [70 bar]	✔	✔	NO 300 psi [20 bar]

If you have previously applied thermal mass flow meters in your flare applications, look no further than ST100 for your next generation solutions. If you have never considered thermal flow meters for your flares, FCI's ST100 Series provides unsurpassed features, functions, performance and calibrations optimized for flare applications that deliver the best possible solution.

General Specifications Summary

Instrument

- **Measuring Capability**
  Flow rate, total flow and temperature (optional pressure)
- **Accuracy**
  Flow
  Standard: ±0.75% reading, ±0.5% full scale
  With SR2x: ±0.75% reading, ±0.5% full scale or ±5% of reading – whichever is better
  Temperature: ±2 °F [±1,1 °C]
- **Repeatability**
  Flow: ±0.5% reading
  Temperature: ±1 °F [±1 °C]
- **Turndown Ratio**
  Standard: Up to 1000:1
  With SR2x: Low flow range 20:1 up to 40:1; high flow range up to 1000:1
  Total effectively up to 4000:1

Flow Element

- **Material of Construction**
  All-welded 316L stainless steel; Hastelloy-C optional
- **Operating Pressure**
  Up to 1000 psig [69 bar(g)] depending on process connection type
- **Operating Temperature (Process)**
  From -40 °F to 850 °F [-40 °C to 454 °C]
- **Pipe Sizes Supported**
  2 1/2″ to 99″ [63 mm to 215 mm] *For smaller line sizes, see Model ST100L*
- **Process Connection**
  Retractable packing glands 50 psi, 500 psi, 1000 psi [3,4 bar, 34 bar, 70 bar], ANSI or DIN flange adjustable; or welded fixed, compression fittings

Flow Transmitter/Electronics

- **Enclosures**
  Polyester powder coated aluminum; optional all stainless steel; four (4) conduit ports threaded as 1/2″ NPT or M20
- **Dust/Water Protection**
  IP67, NEMA 4X
- **Power Supply**
  24 Vdc or 85 Vac to 265 Vac
- **Remoteable**
  Yes, up to 1000′ [300 m]
- **Outputs**
  Three (3) 4-20 mA with HART + one (1) frequency/pulse
  Selectable as 0-1 kHz or 0-10 kHz

  Three (3) 4-20 mA with HART + one (1) frequency/pulse
  Selectable as 0-1 kHz or 0-10 kHz + two (2) 2A relays

  With SR2x, one 4-20 mA output is dedicated to flow rate for low flow range, and one is dedicated to flow for high flow range

  FOUNDATION fieldbus H1

  PROFIBUS PA

  Modbus RS-485

  USB connected serial port and ethernet port always included
- **Inputs**
  Two (2) 4-20 mA
- **Readout/Display and Optical Touch Buttons (Optional)**
  Digital/graphical backlighted LCD; displays all process measurements continuously; includes four (4) optically activated (through glass) programming buttons
- **Calibrations**
  Up to five (5) unique calibrations stored and electronically selectable
- **Data Logger**
  On-board micro-SD (secure digital) memory card; 2 GB capacity supplied, stores approximately 21 M readings

Other Options

- **VeriCal™ In-Situ Calibration Verification System**
- **Dual-Element Systems**
- **Pressure Measurement**
- **Vortab® Flow Conditioners**
- **Transmitter Sun Shield**

For complete details and specifications please see FCI's ST100 Series brochure – visit **www.FluidComponents.com** to request a copy or download a PDF

For smaller line applications (<2 1/2″ [63 mm]) such as flare purge lines or assist gas feed lines, look to FCI in-line style flow meters – **ST100L** or **ST75-ST75V Series**.

FCI FLUID COMPONENTS INTERNATIONAL LLC

Locally Represented By:

Visit FCI online at www.FluidComponents.com | FCI is ISO 9001:2000 and AS9100 Certified

FCI World Headquarters
1755 La Costa Meadows Drive | San Marcos, California 92078 USA | **Phone:** 760-744-6950 **Toll Free (US):** 800-854-1993 **Fax:** 760-736-6250

FCI Europe
Persephonestraat 3-01 | 5047 TT Tilburg, The Netherlands | **Phone:** 31-13-5159989 **Fax:** 31-13-5799036

FCI Measurement and Control Technology (Beijing) Co., LTD | www.fluidcomponents.cn
Room 107, Xianfeng Building II, No.7 Kaituo Road, Shangdi IT Industry Base, Haidian District | Beijing 100085, P. R. China
Phone: 86-10-82782381 **Fax:** 86-10-58851152

1211 1K **Doc. No. 02MK011535 -**

© Copyright 2011 by Fluid Components International LLC. All rights reserved. Manufactured in accordance with one or more of the following patents: US patents pending. FCI is a registered trademark of Fluid Components International LLC. Information subject to change without notice.

GE
Measurement & Control

DigitalFlow™ GF868

Panametrics Flare Gas Mass Ultrasonic Flowmeter with Extended Performance Range

Applications

The DigitalFlow GF868 flowmeter is a complete ultrasonic flow metering system for:

- Flare gas
  - Track down or prevent losses from leakage with positive material identification
  - Account for total plant throughput of material
  - Reduce cost of steam usage with proportional control
  - Conserve energy by eliminating unnecessary flaring
  - Comply with government regulations for pollution control
- Vent gas

Features

- Measures velocity, volumetric and mass flow
- Standard velocity range to 100 m/s (328 ft/s) standard
- Extended velocity range to 120 m/s (394 ft/s) *
- Measures instantaneous average molecular weight
- Measures hydrocarbon gases
- Daily Zero and Span Self-Calibration Check, assuring accurate worry-free operation
- Delivers accurate flow rate, independent of gas composition
- Measures very low to very high velocity
- Field-proven installation techniques
- Built-in totalizers
- Built-in power supply for pressure and temperature transmitters
- 3940 to 1 turndown ratio
- One- or two channel/path configurations

*Velocity maximum may be higher in specific installations—consult with GE

Flare Gas Mass Flowmeter

The DigitalFlow GF868 ultrasonic flowmeter uses the patented Correlation Transit-Time™ technique, digital signal processing, and an accurate method of calculating molecular weight. Add to these features the inherent advantages of ultrasonic flow measurement—reliability with no routine maintenance, high accuracy, fast response, wide rangeability—and the DigitalFlow GF868 flowmeter is the clear choice for flare gas applications.

Correlation Transit-Time Technology is Ideal for Flare Gas Flow Measurement

The Correlation Transit-Time technique has distinct advantages over other methods of flare gas flow measurement, and it is used to solve a variety of difficult problems. Typically, gas in flare stacks, headers or laterals is a mixture of components from different sources. Flow rate in flare systems may be unsteady or even bidirectional. Pulsating pressure, varying composition and temperature, harsh environment, and wide flow range further complicate the measurement. The GF868 is designed for superior performance under these conditions.

Patented Molecular Weight Measurement Method

The DigitalFlow GF868 uses a patented method for calculating the average molecular weight of hydrocarbon mixtures. This proprietary algorithm extends the range for measuring average molecular weight, while improving accuracy and compensating for nonhydrocarbon gases better than ever before possible. Higher accuracy mass flow data and more precise knowledge of flare gas composition can improve the efficiency of plant operation, enabling correct metering of steam injection at the flare tip, rapid troubleshooting of leaks into the flare stream, early detection of process control problems, and accurate plant balance.

Best Technology for Flare Gas

Ultrasonic flow measurement, the ideal technology for flare gas applications, is independent of gas properties, and does not interfere with the flow in any way. All-metal ultrasonic transducers installed in the pipe send sound pulses upstream and downstream through the gas. From the difference in these transit times between the transducers, with and against the flow, the DigitalFlow GF868's onboard computer uses advanced signal processing and correlation detection to calculate velocity, and volumetric and mass flow rate. Temperature and pressure inputs enable the meter to calculate standard volumetric flow. For maximum accuracy, use the two-channel version and measure along two different paths at the same location. The two-channel meter can also measure the flow in two separate pipes or at two different places on the same pipe.

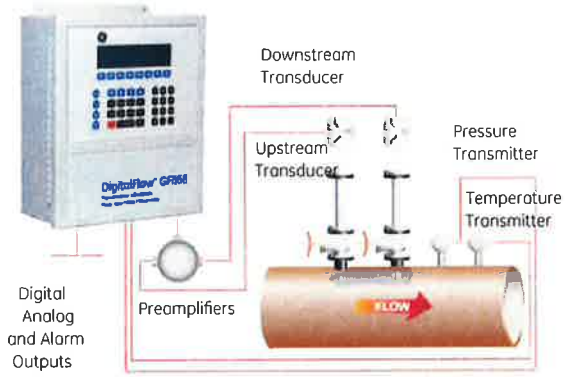

Typical meter set-up for standard volumetric or hydrocarbon mass flow

Simple Installation

The flowmeter system consists of a pair of transducers for each channel, preamplifiers, and an electronics console. The transducers can be installed as part of a flowcell, or directly into the pipe with a hot- or cold-tapping procedure. The electronics console of the DigitalFlow GF868 meter can be located up to 1,000 ft (300 m) from

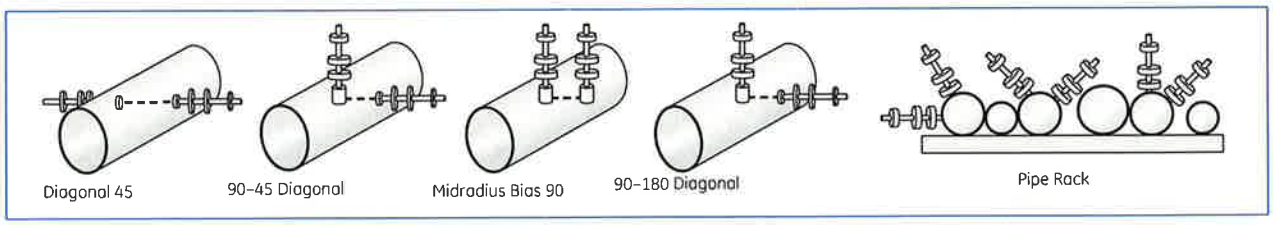

Standard transducer mounting configurations

One Meter, Wide Range of Flow Conditions

High Flow

The DigitalFlow GF868 meter achieves a new standard rangeability of 3280 to 1 and a new Extended Range rangeability of 3940 to 1. It measures velocities from 0.1 to 328 ft/s (0.03 to 100 m/s) standard in both directions, while the Extended Range version measures velocities to 394 ft/s (120 m/s) in one direction, in steady or rapidly changing flow, in pipes from 2 in to 120 in (76 mm to 3 m) in diameter. With this range of operation, one DigitalFlow GF868 flowmeter performs measurements under most of the conditions that may occur in a flare line on or offshore. The extended velocity range to 100 m/s is enabled in standard meters with no loss of accuracy.

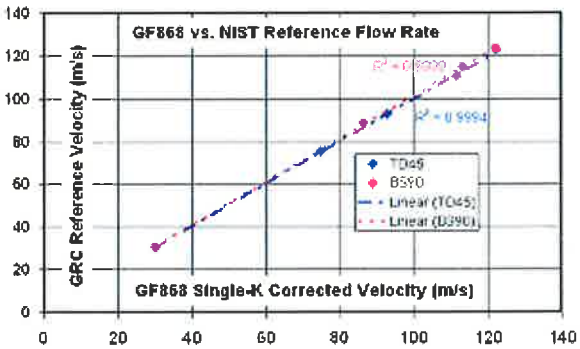

Contact GE for the report *Ultrasonic Flowmeter for Accurately Measuring Flare Gas over a Wide Velocity Range*.

Low Flow

For base load operation the volumetric flow in flares is often in the range 0.1 to 1 f/s (0.03 to 0.3 m/s) and the flare gas flowmeter improves the accuracy over that range, but still measures at high velocity during facility relief or upset conditions. Additional paths, longer paths, unconventional configurations and location of paths are used to achieve accurate low flow measurements. A combination of two types of installation with a two-channel meter allows low flow to be measured by the Diagonal 45 configuration, and the high flow by the Bias 90 configuration. The Diagonal 45 path has a longer path length, and measures the low velocity with a high accuracy while the Bias 90 measures the midrange and high flow rates.

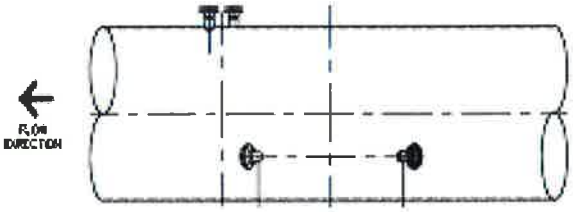

A pipe showing a set of nozzles for Bias 90 on the top and a set for a mid-radius Diagonal 45 below

Identify Leak Sources, Reduce Steam Usage and Improve Plant Material Balance

Leaks and excess steam delivery are two major causes of loss of product and energy. Reducing them immediately improves the overall efficiency in refinery and chemical plant operation. Payback for the entire DigitalFlow GF868 installation usually occurs within a matter of months. The DigitalFlow GF868 can help save millions of dollars in reduced losses.

Once the sound speed of the gas has been determined by the DigitalFlow GF868, its on-board computer uses temperature and pressure inputs in conjunction with the sound speed to calculate instantaneous average molecular weight and mass flow rate of the gas. These parameters are used to help identify sources of leaks into the flare system. Detection of even a small increase in flow rate into the flare system may indicate a leak source such as partially unseated relief valve. An accompanying change in the average molecular weight of the flare gas may be used to help locate the leak source. Quick identification and elimination of leak sources into the flare system saves significant amounts of potentially lost energy and product.

Mass flow rate may be used to perform a mass balance calculation and to control flare tip steam injection. By knowing the exact amount of gas flow and average molecular weight in the flare stack, delivery of the correct amount of steam required at the flare tip can be accurately controlled. Steam usage can be reduced while maintaining compliance with pollution control regulations.

Designed for Flare Gas Environment

The DigitalFlow GF868 flowmeter has no moving parts to clog or wear out. Its patented ultrasonic transducers are constructed of titanium or other metals that withstand the corrosive environment usually found in flare gas applications. The transducers are designed for use in hazardous locations. Wide rangeability allows measurement of flow rate from 0.1 up to 394 ft/s (0.03 to 120 m/s). In contrast to thermal flowmeters, the ultrasonic transit-time technique does not depend on the heat transfer coefficient of the flare gas and does not require regular maintenance. These and other features make the DigitalFlow GF868 unique among flare gas flowmeters.

GF868 Specifications

Electronics

Flow Measurement
Patented Correlation Transit-Time mode

Enclosures
- Standard: Epoxy-coated aluminum weatherproof Type 4X/IP66 Class I, Division 2, Groups A,B,C&D FM and CSA
- Optional: Stainless steel, fiberglass, explosion-proof, flameproof

Dimensions
- Weight 11 lb (5 kg)
- Size (h x w x d) 14.24 in x 11.4 in x 5.12 in (362 mm x 290 mm x 130 mm)

Channels
- Standard: One channel
- Optional: Two channels (for two pipes or two-path averaging)

Display
Two independent software-configurable 64 x 128 pixel backlit LCD graphic displays

Keypad
39-key tactile-feedback membrane

Power Supplies
- Standard: 100 to 130 VAC, 50/60 Hz or 200 to 240 VAC, 50/60 Hz
- Optional: 12 to 28 VDC, ±5%

Power Consumption
20W maximum

Operating Temperature
-4°F to 131°F (-20°C to 55°C)

Storage Temperature
-67°F to 167°F (-55°C to 75°C)

Standard Inputs
Two isolated 0/4 to 20 mA inputs (121Ω) with integral 24 VDC power supply
Namur NE043 compliant

For required temperature and pressure inputs

Standard Outputs
- Six 4 to 20 mA outputs, software assignable
- Two outputs with 550Ω maximum load
- Four outputs with 1000Ω maximum load.

Namur NE043 compliant

Optional Inputs/Outputs
There are four additional slots available for any combination of the following I/O boards:
- Analog output board with four isolated 0/4 to 20 mA outputs, 1 kΩ maximum load
- Analog input board:,two types
  - With two isolated 4 to 20 mA inputs and 24V loop power
  - With two isolated, three-wire, 100Ω RTD inputs; span -148°F to 662°F (-100°C to 350°C);
- Totalizer/frequency output board
  - With four outputs per board, 10-kHz maximum.
  - Software-selectable functioning in two modes
    - Totalizer mode: Pulse per defined unit of parameter (e.g., 1 pulse/ft^3 or 1 pulse/0.028 m^3)
    - Frequency mode: frequency proportional to rate of parameter (e.g., 10 Hz = 1 ft^3/h or 0.028 m^3/h)

- Alarm relay board with three hermetically sealed Form C relays; 120 VAC, 28 VDC maximum, 2A maximum; DC 56W maximum, AC 60 VA

Digital Interfaces
- Standard: RS232
- Optional: RS485 (multiuser)
- Optional: HART® protocol
- Optional: Modbus® RS485 or TCP/IP
- Optional: Ethernet TCP/IP
- Optional: OPC server
- Optional: Foundation Fieldbus
  Namur NE107 Compliant

Site Parameter Programming
Menu-driven operator interface using keypad and "soft" function keys

Data Logging
Memory capacity (linear and/or circular type) to log more than 43,000 flow data points

Display Functions
- Graphic display shows flow in numerical or graphic format
- Displays logged data and diagnostics

European Compliance
Complies with EMC Directive 2004/108/EC, 2006/95/EC LVD (Installation Category II, Pollution Degree 2) and PED 97/23/EC for DN<25

T5/T17 Wetted Flow Ultrasonic Transducers

Temperature Ranges

Normal Temperature:	-55°C to 150°C)
Low Temperature (T5 Only):	-220°C to -50°C
High Temperature:	-50°C to 250°C

Pressure Range

Standard: -2 psig to 1500 psig (87.6 to 10300 kPa)

Transducer Materials

- Standard: Titanium
- Optional: Monel® or Hastelloy® alloys

Process Connections

Flanged and compression fittings

Area Classifications

Explosion-proof Div. 1, Class I, Group C, D
Optional: Group B upon request
ATEX II 2 G Ex d IIC T4, T3 or T2 Gb
IECEx II 2 G Ex d IIC T4, T3 or T2

Insertion Mechanism

Standard and Extended Range

3 in (76 mm) flange mounted packing gland and valve at equal mounting angle both up and downstream

Preamplifier

Transducer Mounted XAMP with transformer and BNC connections; requires one preamp/transformer per channel.

Gain

- Standard: 20
- Optional: 2, 10, 40 (factory selected)

Temperature Range:

-40°C to +60°C (-40°F to +140°F)

Enclosure

Explosion-proof Div. 1, Class I, Group C, D
Optional: Group B upon request
ATEX II 2 G Ex d IIC T6
IECEx II 2 G Ex d IIC T6

Transducer Cables

- Standard: (per pair of transducers)
- One pair of coaxial cables, type RG62 A/U, preamplifier to XGF868i electronics, lengths 3 m (10 ft) to 330 m (1000 ft) maximum
- Optional: flame retardant, armored cable;

Additional Options

PanaView™ PC-Interface Software

The DigitalFlow GF868 communicates with a PC through a serial interface and Windows® operating systems. Features include site files, logs and other operations with a PC.

Installation Flowcells

Transducers and flowcells for specific applications are available. Consult GE for details

Flow Accuracy

T5 Transducer *T17 Transducer*

Transducer Type	T5 Wetted Transducer				T17 Wetted Transducer			
Number of Paths	One Path		Two Paths		One Path		Two Paths	
Flow Measurement Range								
Standard Range	-328 to 328 ft/s (-100 to 100 m/s) - bidirectional							
Extended Range	.1 to 394 ft/s (0.03 to 120 m/s) - non-bidirectional							
Applicable Pipe Sizes								
Diagonal 45	3 in to 14 in (50 to 350 mm) OD				14 in to 120 in (350 to 3000 mm) OD			
Bias 90	Note 1 & 2				Not Applicable			
Design Velocity Accuracy from 1 to 394 ft/s (0.3 to 120 m/s) - see notes below								
Transducer Type	T5 Wetted Transducer				T17 Wetted Transducer			
Number of Paths	One Path		Two Paths		One Path		Two Paths	
	1 ft/s (0.3 m/s)	>3 ft/s (1 m/s)	1 ft/s (0.3 m/s)	>3 ft/s (1 m/s)	1 ft/s (0.3 m/s)	>3 ft/s (1 m/s)	1 ft/s (0.3 m/s)	>3 ft/s (1 m/s)
Pipe Dia. </= 6 in. (150mm)	+-2.5%	+-2.0%	+-2.0%	+-1.5%	NA	NA	NA	NA
Pipe Dia. >/= 6 in (150mm)	+-2.0%	+-2.0%	+-1.5%	+-1.5%	+-2.0%	+-2.0	+-1.5%	+-1.5%
Calibrated Velocity Accuracy from 1 to 394 ft/s (0.3 to 120 m/s) — see notes below								
Transducer Type	T5 Wetted Transducer				T17 Wetted Transducer			
Number of Paths	One Path		Two Paths		One Path		Two Paths	
	1 ft/s (0.3 m/s)	>3 ft/s (1 m/s)	1 ft/s (0.3 m/s)	>3 ft/s (1 m/s)	1 ft/s (0.3 m/s)	>3 ft/s (1 m/s)	1 ft/s (0.3 m/s)	>3 ft/s (1 m/s)
Pipe Dia. </= 6 in. (150mm)	+-1.5%	+-1.0%	+-1.0%	+-0.75%	NA	NA	NA	NA
Pipe Dia. >/= 6 in (150mm)	+-1.0%	+-1.0%	+-0.75%	+-0.75%	+-1.0%	+-1.0%	+-0.75%	+-0.75%
Mass Flow Accuracy								
2 to 120 kg	+-4.0%		+-3.1%		+-2.7%		+-2.3%	
Molecular Weight Accuracy								
2 to 120 kg/kmole	+-1.8% to +-2%							
Flow Velocity Sensitivity from .1 to 1 ft/s (0.03 to .3 m/s)								
Pipe Dia. = 10 in. (250mm)	±0.12 in/s(±0.004 m/s)		±0.08 in/s(±0.003 m/s)		NA		NA	
Pipe Dia. = 14 in. (250mm)	±0.12 in/s(±0.004 m/s)		±0.08 in/s(±0.003 m/s)		±0.08 in/s(±0.003 m/s)		±0.06 in/s(±0.002 m/s)	
Pipe Dia. >/= 20 in. (500mm)	±0.12 in/s(±0.004 m/s)		±0.08 in/s(±0.003 m/s)		±0.06 in/s(±0.002 m/s)		±0.04 in/s(±0.0015 m/s)	

Note 1	Accuracy and sensitivity are dependent on pipe diameter, molecular weight and temperature. All accuracy specs assume molecular weights greater than 24 kg/kmole and temperatures less than 100 °F (38 °C)
Note 2	Accuracy is dependent on straight run. All accuracy specs assume a fully developed flow profile or a minimum straight run of 20D upstream and 10D downstream
Note 3	Stated accuracy may be achieved with total straight run as little as 10D/3D using flow profile correction - contact factory for details

GLOBAL LEADER IN EMISSIONS CONTROL SOLUTIONS

EMISSION GUARANTEE

Provided by: William Casolara

January 12, 2016

Confidential

Emergency Generator Specification

Global Leader in Emission Control Solutions

January 12, 2016

Val Jensen
Valley Power

RE: oilfield standby genset

Mr. Jensen,

I am pleased to provide this emission guarantee based on the following information. If you have any questions or concerns please feel free to contact myself or any of my associates at DCL America.

Also, this guarantee is subject to DCL's standard terms and conditions of sale attached. Copies of the limited warranty statement are available from DCL upon request (DCL doc. No. X0010-0000-68).

Best Regards,

Will Casolara
Senior Sales Engineer
DCL America Inc.

Cell: 760.898.6972
wcasolara@dcl-inc.com

EMISSION GUARANTEE

ENGINE DATA

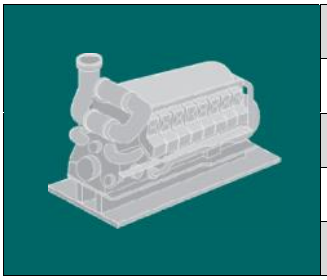

Engine Model	Guascor SFGRD 480
Power	1126 bhp @ 1800 rpm (100% load)
Fuel	PQNG
Exhaust Flow Rate	6830 lb/hr
Exhaust Temperature	1202° F

CATALYST DATA

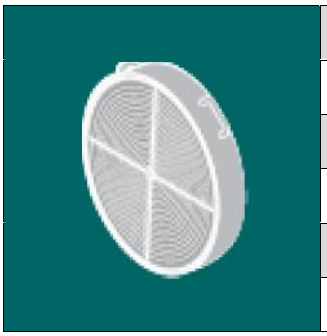

Catalyst Model	2-DC74.5-12 CC
Type	NSCR
# of Elements	2
Cell Density	300 cpsi
Approx. Dimensions	27.25” x 3.75”
Approx. Backpressure	5.2” w.c.

EMISSION REQUIREMENTS

Exhaust Component	Engine Output (g/bhp-hr)	Converter Output	Converter Output (% Reduction)
NOx	11.2	5 ppmvd @ 15% O_2	
CO	8.0	0.209 g/bhp-hr	
VOC	0.4	0.048 g/bhp-hr	>80

The catalyst model selection is based upon the reduction requirements above. Any variance in these requirements may affect the price and model required.

DCL America Inc. 27603 Commerce Oaks Drive, Oak Ridge North, TX 77385
Toll free: 1-877-965-8989 **Fax:** 281-605-5858 **Email:** info@dcl-inc.com **www.dcl-inc.com**

STANDARD TERMS AND CONDITIONS OF SALE – Revised January 2015

1. **Application**. These Standard Terms and Conditions apply to any sale of products, equipment, parts, materials and related services (the **"Products"**) by DCL America Inc. (**"DCL"**) to a DCL customer (the **"Customer"**) and acceptance of these Standard Terms and Conditions is an express condition of such a sale.
2. **Entire Agreement.** These Standard Terms and Conditions, the quotation (the **"DCL Quotation"**) and/or order confirmation (the **"DCL Order Confirmation"**) issued by DCL in respect of each supply of Products and any other document expressly incorporated by reference by DCL in a DCL Order Confirmation (collectively, the **"Agreement"**) constitute the entire agreement between DCL and the Customer regarding a sale of Products by DCL to the Customer and supersede all other discussions, proposals, negotiations, statements, representations, understandings and the like, whether written or oral. DCL rejects any differing or supplemental terms which may be printed or otherwise found in any purchase order or other document sent by the Customer, except as expressly accepted by DCL by the signature of an authorized representative. Unless otherwise specifically and expressly set forth in writing by a duly authorized representative of DCL, if there are inconsistencies in the documents constituting the Agreement, such documents shall take precedence in the following order: (i) these Standard Terms and Conditions, (ii) the DCL Order Confirmation, and (iii) the DCL Quotation or other contract document incorporated by reference by DCL in the DCL Order Confirmation. For purposes hereof, an "**Affiliate**" of DCL includes any entity directly or indirectly controlling, controlled by or under common control with DCL, where "control" of an entity means direct or indirect beneficial ownership of securities representing 20% or more of the votes attached to all outstanding securities of such entity.
3. **Terms of Payment.** Unless otherwise agreed by DCL in writing, DCL invoices for the Customer's purchase of Products are payable within thirty (30) days of the date of the invoice. Should payment of any amount owing to DCL under the Agreement not be made to DCL when due, such payment shall bear interest at the rate of one and one-half percent (1½%) per month or the maximum rate allowed by law, whichever is lower. The charging of such interest shall not be construed as obligating DCL to grant any extension of time in the terms of payment. No cash discount shall be available to the Customer. If prior to any delivery of Products, DCL has concern regarding timely payment of the purchase price because of a material adverse change in Customer's circumstances or otherwise, DCL may require payment of all or additional parts of the purchase price before shipment or delivery and/or DCL may require satisfactory security for the payment of the purchase price.
4. **Delivery Terms.** Each sale of Products shall be shipped in accordance with the IncoTerms 2000 specified in the DCL Quotation or DCL Order Confirmation. If shipping instructions are not so specified for any supply of Products, such supply shall be shipped ex works (IncoTerms 2000). Ex works deliveries of the Products are deemed complete upon release of the Products to the Customer's carrier at the applicable manufacturing facilities located in Concord, Ontario, Canada as specified by DCL in the DCL Quotation, the DCL Order Confirmation, or otherwise. If the Customer is unable or unwilling to accept physical delivery at the time specified, DCL may store or arrange for storage of Products at Customer's cost and the delivery of such Products shall be deemed complete as of the first day of storage.
5. **Taxes.** Unless otherwise expressly provided by DCL in a DCL Quotation or DCL Order Confirmation, or otherwise implicit in the IncoTerms 2000 specified for a particular supply, the price of the Products shall not include sales, use, excise, value added or any similar taxes, duties and other export/import charges, any inspection or testing fees or any other tax, fee, penalty or charge of any nature whatsoever imposed currently or in the future by any federal, state or other government authority, upon or with respect to the sale, purchase, delivery, storage, processing or use of any Product or upon payment to DCL, and all such taxes, fees and other charges shall be paid by Customer in addition to the price of the Products. In the event DCL is required to pay any such taxes, fees or other charge, Customer shall reimburse DCL therefor.
6. **Delivery Schedule.** Time for delivery of Products is approximate and starts to run on the latest of the date specified or confirmed in the DCL Order Confirmation, or the receipt by DCL of any advance payment, credit approval or any security for the balance of the purchase price, as applicable, each as may be requested by DCL. Unless otherwise specified or confirmed in a DCL Order Confirmation, DCL shall not be liable for losses of any kind incurred by the Customer for delays in or failure to deliver all or any part of the Products. Changes in the delivery schedules requested by the Customer must be in writing and received by DCL at least two (2) business days prior to the previously scheduled shipping date. DCL is under no obligation to accept any changes in delivery dates requested by the Customer.
7. **Title Retention.** Title or ownership of the Products shall not pass to the Customer, notwithstanding delivery thereof, but shall remain vested in DCL until the purchase price of the Products is paid in full. As security for the full payment of the purchase price of the Products, the Customer hereby grants to DCL, and DCL hereby reserves, a purchase money security interest and charge in the Products and in all substitutions, replacements and additions thereto and the proceeds thereof. Until such time of full payment, the Customer shall: (a) insure the Products against loss, damage or destruction for full replacement value; and (b) execute such additional documents as DCL requests for the confirmation or perfection of DCL's ownership or security interest and charge. Upon default by the Customer, and subject to applicable law, DCL may repossess and deal with the Products as it sees fit and retain all payments which have been made by the Customer on account of the purchase price as partial damages. Upon any such realization of security, the Customer shall remain liable for any deficiency in the purchase price and shall reimburse DCL for all costs and expenses, including reasonable legal fees, incurred in enforcing its rights. All rights and remedies of DCL are cumulative and in addition to those available at law or in equity.
8. **DCL Property.** All supplies, materials, tools, jigs, dyes, gauges, fixtures, molds, patterns, equipment and other items procured by DCL to perform the supply of Products under any Agreement shall be and shall remain the property of DCL under all circumstances, including, without limitation, reimbursement of DCL by the Customer for all or any portion of the cost of such items.
9. **Risk of Loss.** Unless otherwise specified or confirmed in the DCL Order Confirmation, the risk of loss or damage to the Products including any repaired or replaced items, and the responsibility for the payment of insurance premiums and freight passes to the Customer upon DCL's delivery of such Products to the Customer's carrier as provided in Section 4. No loss or damage to the Products or any portion thereof shall relieve the Customer from its obligations hereunder.
10. **Suitability**. Before using any Product, Customer shall determine the suitability of such Product for Customer's intended use. Customer shall assume all risk and liability whatsoever resulting from the use of the Products.
11. **Limited Warranties.** DCL warrants that each Product is free of defects in material and workmanship strictly in accordance with the terms and conditions of the limited warranty statement specified or confirmed in the applicable DCL Quotation or DCL Order Confirmation at the time of purchase (the **"Product Warranties"**). Additional copies of Product Warranties are available from DCL upon request.
12. **No Other Warranties**. THE LIMITED PRODUCT WARRANTIES REFERRED TO IN SECTION 11 ABOVE ARE EXCLUSIVE AND IN LIEU OF ALL OTHER EXPRESS OR IMPLIED WARRANTIES OR CONDITIONS IN RESPECT OF THE PRODUCTS, INCLUDING, WITHOUT LIMITATION, ALL IMPLIED WARRANTIES OF MERCHANTABILITY, FITNESS FOR A PARTICULAR PURPOSE, TITLE OR INFRINGEMENT OF INTELLECTUAL PROPERTY RIGHTS OR ANY OTHER WARRANTIES ARISING BY OPERATION OF LAW, COURSE OF DEALING, TRADE USAGE, REPRESENTATION, STATEMENT OR OTHERWISE. THE REMEDIES PROVIDED IN THE

APPLICABLE PRODUCT WARRANTY ARE THE CUSTOMER'S SOLE REMEDIES FOR ANY FAILURE OF DCL TO COMPLY WITH ITS WARRANTY OBLIGATIONS. Applicable law may not allow exclusions of implied warranties, so the above exclusions may not apply.

13. **Limitation of Liability**. NEITHER DCL NOR ITS AFFILIATES SHALL UNDER ANY CIRCUMSTANCE BE LIABLE TO ANYONE FOR DIRECT, INDIRECT, INCIDENTAL, SPECIAL, CONSEQUENTIAL OR EXEMPLARY DAMAGES OF ANY KIND, INCLUDING, BUT NOT LIMITED TO, ANY LOST PROFITS AND LOST SAVINGS, HOWEVER CAUSED, WHETHER FOR BREACH OR REPUDIATION OF CONTRACT, TORT, BREACH OF WARRANTY, NEGLIGENCE, OR OTHERWISE, WHETHER OR NOT DCL WAS ADVISED OF THE POSSIBILITY OF SUCH LOSSES OR DAMAGES. IN NO EVENT SHALL DCL BE LIABLE FOR THE COST OF PROCUREMENT OF SUBSTITUTE PRODUCTS. DCL'S MAXIMUM TOTAL CUMULATIVE LIABILITY FOR ANY REASON SHALL NOT EXCEED THE AGGREGATE PURCHASE PRICE FOR THE APPLICABLE PRODUCTS SUPPLIED UNDER THE AGREEMENT. THE FOREGOING LIMITATION OF LIABILITY SHALL APPLY TO THE FULLEST EXTENT PERMITTED BY LAW IN THE APPLICABLE JURISDICTION. CUSTOMER HAS ACCEPTED THE DISCLAIMER OF WARRANTIES IN SECTION 11 AND LIMITATION OF LIABILITY IN THIS SECTION 13 AS PART OF A BARGAIN WITH RESPECT TO THE PRICING OF THE PRODUCTS AND UNDERSTANDS THAT THE PRICING WOULD BE HIGHER IF DCL WERE REQUIRED TO BEAR LIABILITY IN EXCESS OF THAT STATED HEREIN. DCL neither assumes nor authorizes any person, firm or entity to assume for DCL any other additional liability or responsibility in connection with the Products, including any affirmation, representation, or warranty concerning the Products made by an agent, employee, or representative of DCL.
14. **Indemnification**. Customer shall defend, indemnify and hold harmless DCL and its Affiliates and their respective officers, directors, agents, employees, successors, assigns and other customers (collectively, the "**Indemnified Parties**") against any and all claims, demands, actions, suits, proceedings, damages, obligations, losses, liabilities and expenses (including all legal fees) and judgments of any nature whatsoever arising from or in connection with (a) the use, operation, storage, sale, processing, or other disposition of the Products sold to such Customer under the Agreement, or the action or inaction of Customer or, if applicable, its employees, customers, or agents, which may cause injuries or damage, and (b) any alleged intellectual property infringement arising out of Customer's use of the Products or incorporation of the Product(s) as components into any other product. DCL shall hold the benefit of this indemnity in trust for the Indemnified Parties other than DCL, who shall be entitled to enforce this indemnity to the same extent as if they were parties hereto.
15. **Intellectual Property**. Neither Customer, nor its affiliates (nor their respective successors, assigns, licensees or other transferees) shall enforce (or attempt or purport to enforce) against DCL or its affiliates, (sub)licensees, manufacturers, and distributors any existing or future patent that claims (or purports to claim) any or part of the Products or the use, design, manufacturing, layout and packaging thereof. This nonassertion covenant shall be a covenant that transfers with any sale, license or other disposition or grant of rights under the applicable patent rights.
16. **Re-sale of Products**. Without limiting the generality of anything set forth in the Agreement, in respect of any re-sale of the Products or sale of any product which incorporates a Product as a component, the Customer shall indemnify, defend and hold harmless DCL, its officers, directors, agents, employees, successors, assigns and other customers against any and all claims, actions, losses, liabilities and expenses (including all legal fees) or judgments arising from or in connection with a representation or warranty for the Products, including in their capacity or use as a component part of other products, made by the Customer, other than as limited by the applicable Product Warranties, or arising from an allegation of patent infringement relating to Customer's product(s) in which the Products are used as a component part.
17. **Survival.** All payment obligations, provisions for the limitation of or protection against liability of DCL and any other provision of an Agreement which by its nature are continuing shall survive the termination, cancellation or expiration of such Agreement.
18. **Permits.** The Customer shall obtain at its expense all licences, permits and approvals for the purchase, delivery, shipment, installation and use of any Products.
19. **Force Majeure.** DCL is excused from the timely performance of its obligations in the sale or other supply of Products if its performance is impeded or prevented by circumstances beyond its control (a **"Force Majeure Event"**) and DCL is taking all reasonable steps to mitigate the effect of the delay. Following the occurrence and the termination of a Force Majeure Event, DCL shall provide the Customer with written notice and reasonable particulars of the Force Majeure Event. Either party may terminate any Agreement affected by a Force Majeure Event if such circumstances continue for more than six (6) months. Upon and notwithstanding any such termination, the Customer shall pay DCL for that portion of the Products manufactured or delivered prior to the date of the abovementioned initial notice of the Force Majeure Event. Notwithstanding anything in this Section 19, the Customer shall extend any security granted for the payment of the purchase price of Products for a period equal to the delay caused by the Force Majeure Event.
20. **Governing Law.** The sale of the Products and this Agreement are governed by the laws of Delaware and the laws of United States applicable therein. Each of the parties irrevocably attorns to the exclusive jurisdiction of the courts of Delaware, provided that DCL shall not be prevented from seeking injunctions or other temporary relief or enforcing judgments of the courts of Delaware in another jurisdiction. The United Nations Convention on the International Sale of Goods is explicitly excluded from this Agreement.
21. **Confidential Information.** Customer shall not disclose proprietary or confidential business or technical information disclosed by DCL or related to any Products to any third parties and shall not use such information for its own benefit or for any purpose other than for the express purpose for which it was disclosed as set forth in writing by DCL at the time of disclosure.
22. **Assignment.** Customer may not assign all or any part of the Agreement for sale of Products without the prior consent of DCL. Any attempt at assignment shall be null and void unless made in conformity with this Section 22.
23. **Waiver, Amendment.** Any waiver, modification or amendment of the Agreement shall only be effective as against DCL if such waiver, modification or amendment is contained in a written instrument prepared or otherwise accepted in writing by DCL. A waiver or modification by DCL of any condition or obligation of Customer hereunder shall not be construed as a waiver or modification of any other condition or obligation and no waiver or modification by DCL granted on any one occasion shall be construed as applying to any other occasion.
24. **Suspension or Cancellation.** Subject to Section 19 hereof, no Agreement may be cancelled or suspended by the Customer without the express written consent of DCL, such consent to be granted in DCL's sole and unrestricted discretion and upon such terms, including the payment of all costs incurred and profits foregone, as DCL may require.
25. **Severability.** If a binding court determination is made that a provision of these Standard Terms and Conditions or any other document which forms the Agreement is unenforceable (in whole or in part), then such provision shall be void only to the extent that such determination requires, and the parties shall replace such void provision with one that is enforceable and valid and, to the greatest extent permitted by law, serves the intent and purpose of the void provision. No other provision shall be affected as a result thereof, and, accordingly, the remaining provisions shall remain in full force and effect as though such void, voidable or inoperative provision had not been contained herein.

DRESSER-RAND. Guascor Engines & Gensets	GROUP	GAS	PRODUCT INFORMATION	INDEX
	IC		OF-G-48-060	A1
	POWER RATING		DATE 01-12-16	DEP. 2

GENSET:	**SFGRD 480**	**SPEED:**	**1800**
JACKET WATER TEMPERATURE(°F):	**194**	**FUEL TYPE:**	**NATURAL GAS**
INTERCOOLER WATER TEMP(°F):	**131**		

APPLICATION:	**EMERGENCY (ESP)**	COMPRESSION RATIO:	**9,2:1**
COOLING SYSTEM:	**TWO CIRCUITS**	REGULATION:	**Electronic**
	TWO STAGE IC	IGNITION TIMING:	**16º**
EXHAUST MANIFOLD TYPE:	**WATER COOLED**	MAX. BACK PRESSURE:	**18 ''H2O (450 mmH2O)**
EMISSIONS:			
NOX g/bHPh(11)	**11,2**	AMBIENT CONDITIONS ISO 3046/1:	
CO g/bHPh(11)	**<8**	Atmospheric pressure (''Hg (kPa))=	**30 (100)**
NMHC g/bHPh(11)	**<0,4**	Ambient temperature (°F (°C))=	**77 (25)**
		Relative humidity (%)=	**30**

POWER RATING (4)			NOMINAL	PARTIAL LOADS		
LOAD		%	**100%**	80%	60%	40%
MECHANICAL POWER	**(3, 4, 5)**	BHP (KWb)	**1126 (840)**	901 (672)	676 (504)	451 (336)
BMEP		psi (bar)	**170 (11,7)**	135 (9,3)	102 (7,0)	68 (4,7)
ELECTRICAL POWER (cosϕ 1)		kWe	**809**	646	481	316
ELECTRICAL POWER (cosϕ 0,8)		kWe	**801**	640	478	314
FUEL CONSUMPTION	**(1)**	BTU/bHP-hr (KW)	**7600 (2508)**	7900 (2086)	8490 (1682)	9541 (1261)
MECHANICAL EFFICIENCY		%	**33,5**	32,2	30,0	26,6
ELECTRICAL EFFICIENCY (cosϕ 1)		%	**32,3**	31,0	28,6	25,1
HEAT IN MAIN WATER CIRCUIT	**(1)**	BTU/min (KW)	**47710 (839)**	40550 (713)	34630 (609)	27980 (492)
HEAT IN SECONDARY WATER CIRCUIT	**(1)**	BTU/min (KW)	**6199 (109)**	5858 (103)	5289 (93)	4663 (82)
HEAT IN CHARGE COOLER	**(1)**	BTU/min (KW)	**1990 (35)**	1763 (31)	1479 (26)	1137 (20)
HEAT IN OIL COOLER	**(1)**	BTU/min (KW)	**4208 (74)**	4095 (72)	3810 (67)	3526 (62)
HEAT IN EXHAUST GASES (25 ºC)	**(1)**	BTU/min (KW)	**39070 (687)**	32240 (567)	25420 (447)	18540 (326)
HEAT IN EXHAUST GASES (120ºC)	**(1)**	BTU/min (KW)	**33140 (583)**	27290 (480)	21460 (377)	15570 (274)
EXHAUST GAS TEMPERATURE	**(1)**	°F (°C)	**1202 (650)**	1193 (645)	1170 (632)	1139 (615)
HEAT TO RADIATION	**(1)**	BTU/min (KW)	**1877 (33)**	1763 (31)	1649 (29)	1422 (25)
CARBURETION SETTINGS (2)						
O2 TO EXHAUST(DRY)(ONLY A REFERENCE)		%	**0,2**	0,2	0,2	0,2
MASS FLOWS						
INTAKE AIR FLOW	**(1)**	lb/h (Kg/h)	**6430 (2920)**	5340 (2420)	4310 (1960)	3230 (1460)
EXHAUST GAS FLOW (WET)	**(1)**	lb/h (Kg/h)	**6830 (3100)**	5680 (2580)	4580 (2080)	3440 (1560)

NOTES:

1. 100% LOAD TOLERANCES:
   FUEL CONSUMPTION +5%,
   COOLING CIRCUIT AND EXHAUST GASES ± 8%, RADIATION ±25%
   EXHAUST TEMPERATURE ±36°F (20°C), MASS FLOWS ± 10%.
2. THE ENGINE PERFORMANCE DATA, TIMING ADVANCE AND CARBURETION SETTINGS ARE VALID FOR A GAS THAT FULFILS THE REQUIREMENTS DEFINED IN IC-G-D-30-001e AND IC-G-D-30-002e
3. POWER INCLUDES MECHANICAL PUMPS. POWER RATING ACCORDING TO ISO 8528-1.
4. POWERS ARE VALID FOR AMBIENT TEMP.=104 ºF (40 ºC) AND AN ALTITUDE OF =6562 ft (2000 m). SEE OTHER CONDITIONS IN PI IC-G-B-00-001
5. OVERLOAD NOT ALLOWED
6. THE SPECIFICATIONS AND MATERIALS ARE SUBJECT TO CHANGE WITHOUT NOTIFICATION
7. A ENGINE WITH INLET OR OUTPUT RESTRICTION OVER PUBLISHED LIMITS, OR WITH INADEQUATE MAINTENANCE OR INSTALLATION CAN MODIFY POWER RATING DATA.
8. EMSSIONS ACCORDING TO D1 CYCLE IS 8178-4.
9. ALTERNATOR VOLTAGE 440 V
10. **STAND-BY MEANS AN AVERAGE LOAD OF 85% IN 24 HOURS WITH AN ANNUAL OPERATION LIMITATION OF 400 HOURS**
11. **3 WAYS CATALYST NO CONSIDERED IN EXHAUST.**
12. **RUNNING CHECKS ARE REQUIRED MONTHLY, AT LESAST AT 40% LOAD, ACCORDING TO IO-G-M-00-064e**

TECHNICAL CHARACTERISTICS "V" RICH BURN GAS ENGINES

ITEM	UNITS	SFGRD 360	SFGRD 480	SFGRD 560
Nº of Cylinders		12	16	
Cycle		4 strokes per cycle		
Cylinder Bore X Stroke	mm / (in)	152 x 165 / (5.98 x 6.50)		160 x 175 / (6.30 x 6.90)
Displacement	L / (In^3)	35,93 / (2193)	47,90 / (2923)	56,30 / (3436)
Compression Ratio		9,2:1		
Firing Order		1-8-5-10-3-7-6-11-2-9-4-12	1-12-4-10-2-14-6-16-8-13-5-15-7-11-3-9	
Rotation as viewed from the Flywheel end		Counter-clockwise		
Flywheel Housing / Flywheel		SAE 00 / 18"		
Valve Set	Intake: mm /(in) Exh.: mm /(in)	0.3 / (0.012) 0.8 / (0.031)		
Engine Weight	Kg / (Lb)	4115-4200 / (9072-9259)	5360-5450 / (11816-12015)	5800 / (12787)
General Dimensions	W mm / (in)	1664 / (65.51)	1664 / (65.51)	1669 / (65.71)
	L mm / (in)	2796 / (110.08)	3033 / (119.41)	3033 / (119.41)
	H mm / (in)	2258 / (88.90)	2278 / (89.69)	2270 / (89.37)

COOLING SYSTEM				
Types		Water-Water or Water-Air		
Main Circuit capacity	L / (gal)	180 / (47.6)	200 / (52.8)	
Standard Jacket Water Temp.	ºC / (°F) min-std	75-90 / (167-194)		75-90 / (167-194)
High Jacket Water Temp.	ºC / (°F) max	96 / (205)		96 / (205)
Auxiliary Water Temp.	ºC / °F	/55 /(131)		/40 /(104)

LUBRICATION SYSTEM				
Oil type	Natural Gas	GUASCOR MOTOROIL 3040 Plus See IC-G-D-25-003		
Normal Oil Pressure	Bar / (psi)	4 – 6 / (58-87)		
Oil Temperature (min/max)	ºC / °F	80 –95 / (176-203)		
Oil capacity (max)	L / (gal)	174 / (46)	233 / (61.5)	272 / (71.9)
Approximate oil consumption	gr/kWh / (gr/hphr)	0.35 / (0.26)		0.20 / (0.15)

COMBUSTION SYSTEM			
Type of Combustion		Rich burn (Lambda ≈ 0.98)	
Regulation		SFGRD: Electronic mixture regulation	
Fuel Gases		Natural Gas *	Natural Gas **
Gas regulation valve		With Zero Pressure Regulator	

* Natural gas of methane number >75
** Natural gas of methane number >80

Miscellaneous Equipment

TODO®

A Gardner Denver Product

TODO-MATIC® DRY-BREAK® COUPLINGS

We are proud to present the TODO-MATIC® range of DRY-BREAK® couplings. More than 30 years of expertise has gone into their design and manufacture.

In sizes from 1" to 6" and a wide range of material options, TODO-MATIC® DRY-BREAK® couplings offer advanced fluid handling solutions for a diverse range of industries.

Major offshore exploration, chemical, pharmaceutical and petro chemical companies rely on TODO-MATIC® couplings to safely transfer their most aggressive or valuable products.

Designed for safe and easy use with minimum operator intervention. TODO-MATIC® couplings offer an unbeatable combination of technical, safety and performance features.

FEATURES

- Valves open and close automatically on connection and disconnection.
- Simple single action operation, no levers or switches to operate.
- Valves are guaranteed closed prior to disconnection.
- Minimal residual loss on disconnection (e.g. maximum 0.35cc for 2" DN50).
- Will connect and disconnect under pressure and flow where necessary.
- Extremely reliable, very few moving parts.
- Robust construction, no external operational components.
- Available with selectivity system to prevent cross contamination.
- Reduces spillages to virtually zero.
- Dramatically improves both operational and fugitive emission performance.
- Reduces the possibility of human error in transfer operations.
- Improves efficiency.

HOW IT WORKS

Turning the hose unit 15° clockwise locks the units together.
The valves are still closed and are not opened until a further rotation of 90° has been performed and then the product flow is guaranteed.
To close the valve and to unlock the units, reverse the procedure.

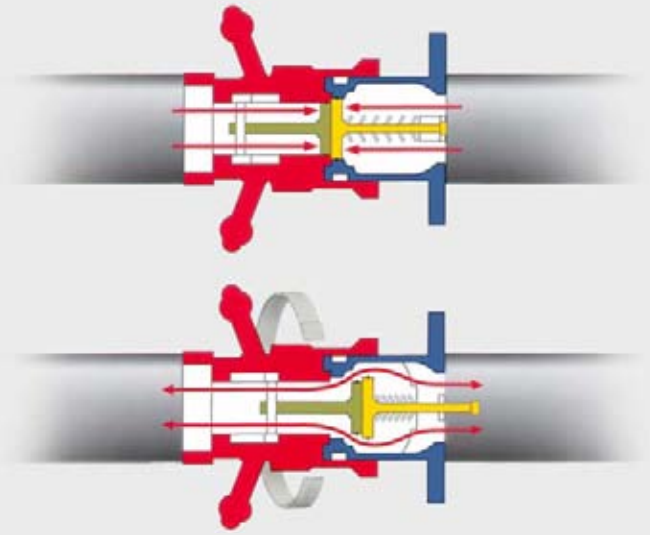

TECHNICAL DETAILS

Sizes:	1" (DN19 - DN32) to 6" (DN150).
Materials:	Aluminium, gunmetal and stainless steel 316L, other on request.
Seals:	FKM (Viton®), NBR (Nitrile), EPDM, Chemraz®, Kalrez®. Other materials on request.
Working pressure:	PN 10 - PN 25.
Test pressure:	Working pressure +50%.
Safety factor:	5:1.
End connections:	BSP- and NPT-threads. DIN-, ASA-, TW- and TTMA-flanges (available for both tank and hose units). Other threads and flanges on request.
Compatibility:	NATO STANAG 3756.

Viton® and Kalrez® is registered trademarks of DuPont Performance Elastomers.
Chemraz® is a registered trademark of Green-Tweed.

FLOW CAPACITY

TODO-MATIC® DRY-BREAK® couplings offer high flow capacity
Media: water. Temperature: 20°C.

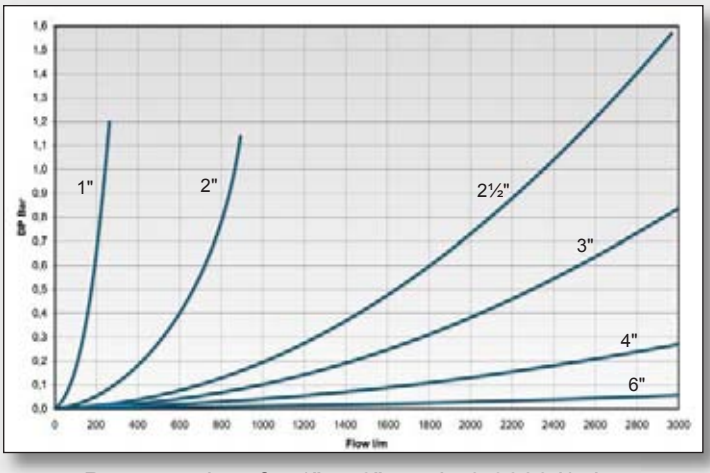

Pressure drop for 1" to 6", scale 0-3000 l/min.

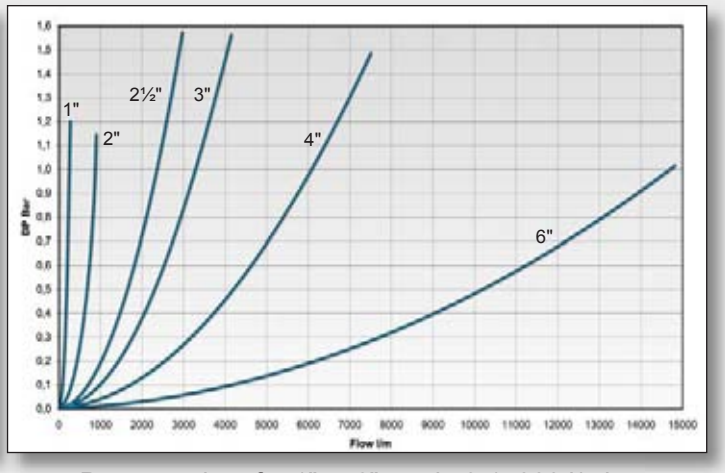

Pressure drop for 1" to 6", scale 0-15000 l/min.

CERTIFICATES / APPROVALS

TODO-MATIC® couplings carry the highest level of certification and approvals available.
VdTÜV under test approval mark TÜ.AGG.162-93 towards ADR, RID, IMDG and TA-Luft classifications.
European directives 97/23/EC (PED) and 94/9/EC (ATEX) compliant. Manufactured under EN ISO 9001:2000.

TODO-MATIC® SIZE RANGE

1" TODO-MATIC® (DN19 - DN32, Ø56 mm)

TODO-MATIC® DRY-BREAK® couplings in 1" size are designed for smaller bore applications where compact dimensions are required. One handed operation, high flow rate and minimal release on disconnection make TODO-MATIC® perfect for transferring high value or sensitive medias with confidence. The addition of selectivity to prevent product cross contamination expands the operational possibilities in manifold exchange applications.

2" TODO-MATIC® (DN40 - DN50, Ø70 mm)

Our 2" coupling size probably covers the most diverse selection of applications in the TODO-MATIC® family. Available in a range of material and connection configurations, TODO-MATIC® 2" is designed for rapid and safe transfers. Offshore chemical dosing, Pharmaceutical feedstock and aggressive chemical vapour transfer are just some of the challenging applications TODO-MATIC® couplings see on a daily basis.

2½" TODO-MATIC® (DN65 - DN80, Ø105 mm)

The 2½" TODO-MATIC® coupling is generally used in road tanker and aviation applications transferring a variety of liquids and vapours. Just like all TODO-MATIC® couplings, the 2½" is available in a full range of materials to offer compatibility with most applications. A strong integral swivel, ergonomic design and rugged construction ensure TODO-MATIC® couplings are equipped for the real world.

3" TODO-MATIC® (DN80, Ø119 mm)

A true 3" coupling, similar in size to the 2½" but with greater flow. Typically used for road and rail tank loading / discharge, in plant chemical transfers etc. Tough construction, ease of handling, no spillage and high flow made this coupling form the natural choice for N.A.T.O refuelling standardisation.

4" TODO-MATIC® (DN100, Ø164 mm)
Without exception, the most compact, light weight, high flow 4" self sealing coupling system available. Used extensively for offshore ship to rig transfers of fuels and drinking water, aviation fuel bunkering, rail tank loading / discharge, chemicals etc.
Rapid, positive connection and disconnection make TODO-MATIC® the standard for barge to ferry re-fuelling and multiple rail tank discharge.

6" TODO-MATIC® (DN150, Ø238 mm)
The same features and method of operation as the rest of the range make 6" TODO-MATIC® the ideal ship / barge to shore connection.
Much faster and safer than any flange coupling means not only environmental standards compliance but real turn around time savings. Full marine construction with rotating lifting loop as standard.
As with all TODO-MATIC® couplings, the 6" is equally suitable for flexible hose or loading arm applications.

Hose unit with flange
All sizes of the hose unit are also available with flange.

APPLICATIONS

- Road / Rail tanker loading / discharge
- ISO retrofit & new build
- IBC containers
- Offshore rig supply
- Pharmaceutical processing
- Vapour Recovery
- Ship to shore / ship / rig transfer
- Ship manifold exchange
- Bulk loading / discharge
- Paints & inks
- Marine refuelling
- Bitumen transfer
- Brewery
- Food feedstock
- Hazardous waste transfer
- Aviation bunkering
- Exchange manifolds
- Blending pits
- Rail locomotive refuelling
- Tank top / bottom loading
- etc..

GUINNESS

SAFETY PRESSURE TIGHT CAP

Designed to enhance operator safety & containment security in chemical & gas transport.
Pressure indicator, depressurization, customs / tamper seal feature, automatic locking, certified closure.
Manually lockable (with padlock). WP: PN 25. *Sizes: 2" - 4".*

DUST PLUGS AND DUST CAPS

Available in stainless steel, brass / gunmetal and aluminium. There are also versions availabe in rubber.
Dust plugs / caps should be used to prevent ingress of dirt or water. *Sizes: 1" - 6".*

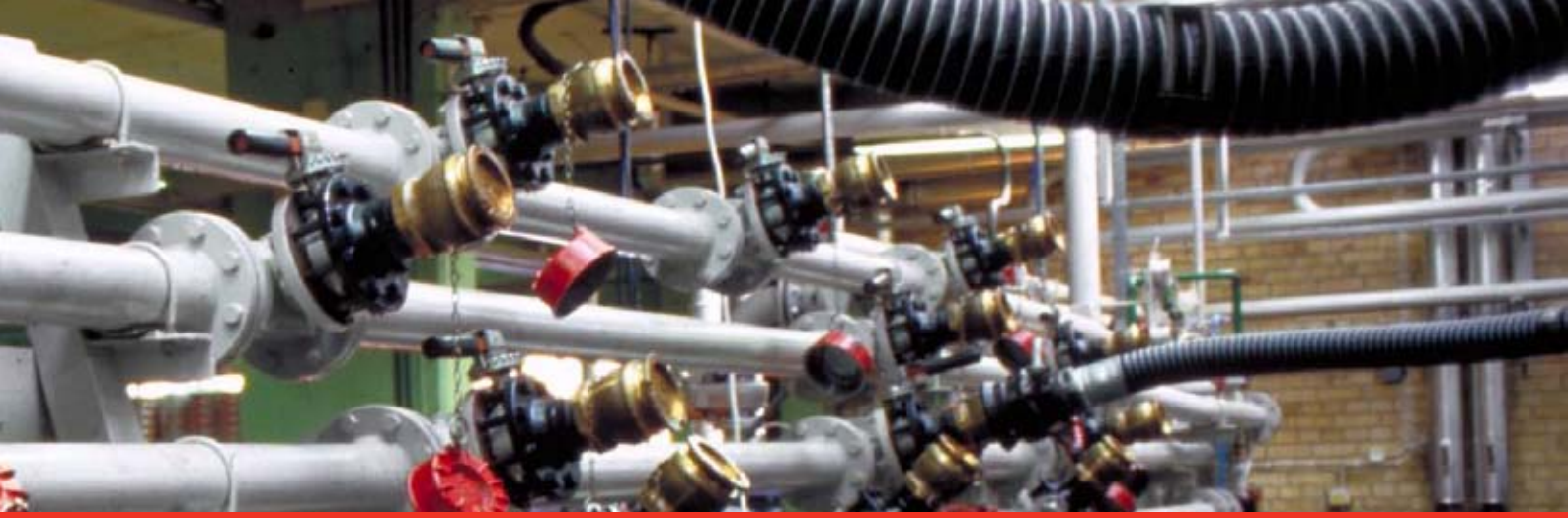

SELECTIVITY

To avoid cross contamination by connecting a hose unit to the wrong tank unit.
Each unit has a number of selective positions, designated by a coded part number according to the coupling size.

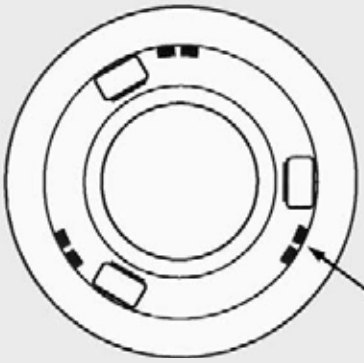

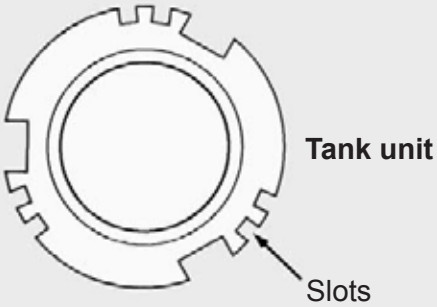

SPECIALS / ACCESSORIES

Pressure relief valve, for tank unit
Dissipates trapped fluid pressure into hose unit without spillage, to allow easy connection.

TODO 4WD
Developed specially for the use of aggressive chemicals and uses a new patented valve mechanism. Easier to connect / disconnect. Less seal wear due to the use of advanced seating and coating technologies. Less total loss of fluid on disconnection. WP: PN 25.

SPECIALS / ACCESSORIES

TODO-MATIC® for extremely corrosive media
Available in Hastelloy, other materials on request.

Tools for draining of hose and tank units

Parking device
For safe and convenient storing of hose units.

Hose unit with magnetic switch
The switch indicates if the hose unit is fully connected to a standard tank unit. Can be used to start pumps, activation of brakes on road tankers, etc.

1" foldable handle

2" foldable handle mounted on the swivel

2" round handle

2½"-3" straight handle

4" round handle

TODO® is the world's leading manufacturer of DRY-BREAK® couplings

TODO® was established as a family concern in 1971 based in Töreboda, Sweden. In 2006 TODO® was aquired by Gardner Denver International and now form part of the companies Fluid Transfer Division. With 35 years of experience in the fluid handling industry TODO® is now established as the world´s leading manufacturer of DRY-BREAK® couplings. These couplings are supplied globally into a diverse range of industrial applications for the transfer of oil, gases, chemicals etc.

TODO-MATIC® DRY-BREAK® couplings provide easy, quick, safe and environmentally friendly handling of liquids and gases. They minimise risk of operator exposure to emissions, provide better ergonomics, reduce human error and achieve commercial benefits through time saving / clean up costs.

TODO® design and manufacture to EN ISO 9001:2000 accredited quality procedures and provide a product range that conforms to all relevant international quality, performance and safety standards. TODO-MATIC® couplings carry the highest level of certification and approvals available.

PRODUCT RANGE

TODO-MATIC®

TODO-GAS®

TODO® Safety Break Away

TODO-45 aviation

PTC (Pressure Tight Cap)

Ball Valves

Fuel Nozzles

API couplings

Swivels

© Copyright TODO AB. TODO AB reserves the right to make changes at any time in prices, materials, specifications and models and to discontinue models without notice or obligations.
Art. no. M-020100-1. Version 070201

TODO AB Tel: +46 (0)506 19940 Fax: +46 (0)506 19944 Email: todose@gdtodo.com

www.todo.se

Fluid Throughput Measurement

Fluid Throughput Measurement of Storage Tanks

Aera will maintain records of fluid production, flows, injection and sales. The fluid throughput of storage tanks will be tracked and recorded. Tracking of flow through each tank will either be made directly by flow meter measurement or by delivery ticket. Throughput records will conform with applicable rules and regulations.

Project planned monitoring of tank fluid throughput is summarized below:

Equipment Tag Number	Description Long	Throughput Measurement Method	Description	Calculation Method (if applicable)
T-2040	Light Oil Storage Tank	Flow Meter	LACT flow meter at truck unloading station	Direct reading from meter
T-2050	Light Oil Storage Tank	Flow Meter	LACT flow meter at truck unloading station	Direct reading from meter
T-2170	Stock Oil Storage/ Reject Tank	Flow Meter	LACT flow meter at truck loading station	Direct reading from meter
T-2180	Stock Oil Storage/ Reject Tank	Flow Meter	LACT flow meter at truck loading station	Direct reading from meter
T-3030	Clarifier Tank	Flow Meter	Flow meter at inlet of Clarifier T-3030	Direct reading from meter
T-3130	Clarifier Tank	Flow Meter	Flow meter at inlet of Clarifier T-3130	Direct reading from meter
T-3200	Filter Feed Tank	Flow Meter	Flow meter at inlet of Clarifier T-3030	Direct reading from meter
T-3300	Filter Feed Tank	Flow Meter	Flow meter at inlet of Clarifier T-3130	Direct reading from meter
T-3400	Filtered Water Tank	Flow Meter	Flow meters on NutShell Filters F-3230 & F-3240 inlets	The sum of both meters, when the filters are on "Active" status
T-3430	Filter Backwash Tank	Flow Meter	Flow meters on NutShell Filters F-3230 & F-3240 inlets	The sum of both meters, when the filters are on "Backwash" status
T-3500	Filtered Water Tank	Flow Meter	Flow meters on NutShell Filters F-3330 & F-3340 inlets	The sum of both meters, when the filters are on "Active" status
T-3530	Filter Backwash Tank	Flow Meter	Flow meters on NutShell Filters F-3330 & F-3340 inlets	The sum of both meters, when the filters are on "Backwash" status
T-4200	Soft Water Tank	Flow Meter	Flow meters on inlets of Softeners V-4010, V- 4030, and V-4050	The sum of all flow meters, when the softeners are on "Softening" status
T-4290	Brine Tank	Flow Meter	Flow meter on Brine Make-up Pump Station (P- 4230/40)	Direct reading from meter divided by 2 (half the flow goes to T-4300)
T-4300	Brine Tank	Flow Meter	Flow meter on Brine Make-up Pump Station (P- 4230/40)	Direct reading from meter divided by 2 (half the flow goes to T-4290)
T-4400	Soft Water Tank	Flow Meter	Flow meters on inlets of Softeners V-4110, V- 4130, and V-4150	The sum of all flow meters, when the softeners are on "Softening" status
T-4490	Brine Tank	Flow Meter	Flow meter on Brine Make-up Pump Station (P- 4430/40)	Direct reading from meter divided by 2 (half the flow goes to T-4500)
T-4500	Brine Tank	Flow Meter	Flow meter on Brine Make-up Pump Station (P- 4430/40)	Direct reading from meter divided by 2 (half the flow goes to T-4490)
T-4600	Water Injection Tank	Flow Meter	Flow meter on Disposal Pump Station (P-4610/20)	Direct reading from meter
T-5100	SulFerox Inventory Storage Tank	Flow Meter	Flow meter on Inventory Return Pump P-5110	Direct reading from meter
T-5120	SulFerox Iron Chelate Make-up Tank	Flow Meter	Flow meter on SULFEROX Make up Pump P-5140	Direct reading from meter
T-5130	SulFerox Iron Chelate Make-up Tank	Flow Meter	Flow meter on SULFEROX Make up Pump P-5150	Direct reading from meter
T-5160	SulFerox Caustic Tank	Delivery Ticket	Volume provided on delivery ticket	Direct reading from ticket
T-5180	SulFerox Inhibitor Tank	Delivery Ticket	Volume provided on delivery ticket	Direct reading from ticket
T-5200	SulFerox Defoamer Tank	Delivery Ticket	Volume provided on delivery ticket	Direct reading from ticket
T-5230	SulFerox Detergent Tank	Delivery Ticket	Volume provided on delivery ticket	Direct reading from ticket
T-5260	SulFerox Calcium Nitrate Tank	Delivery Ticket	Volume provided on delivery ticket	Direct reading from ticket
T-5820	SulFerox Filtrate Tank	Flow Meter	5780/90)	Direct reading from meter
T-6260	Sulfur dioxide/ wet electrostatic precipitator 25 percent Caustic Tank	Delivery Ticket	Volume provided on delivery ticket	Direct reading from ticket

T-6290	wet electrostatic precipitator 1 percent Caustic Tank	Flow Meter	6300/10)	Direct reading from meter
T-6320	Sulfur dioxide/Waste Tank	Flow Meter	6330/40)	Direct reading from meter
T-7030	Sludge Separation Tank	Flow Meter	Flow meter at inlet of Tank	Direct reading from meter
T-7070	Skim Oil Tank	Flow Meter	Flow meters at discharge of tank	The sum of flow meters, one at Skim Oil Transfer Pump Station and the other at Produce Water Transfer Pump station
T-7140	Sludge Separation Tank	Flow Meter	Flow meter at inlet of Tank	Direct reading from meter
T-7180	Skim Oil Tank	Flow Meter	Flow meters at discharge of tank	The sum of flow meters, one at Skim Oil Transfer Pump Station and the other at Produce Water Transfer Pump station
T-9650	Fire/Utility Water Storage Tank		excluded	
T-9860	Heat Medium Storage Tank	Delivery Ticket	Volume provided on delivery ticket	Direct reading from ticket
T-9960	Heat Medium Storage Tank	Delivery Ticket	Volume provided on delivery ticket	Direct reading from ticket

Light crude oil received will be measured by automated custody transfer equipment and truck volumes will be documented with receiving tickets. Oil sales will be measured by automated custody transfer equipment and documented in a sales ticket.

SG Fuel Use Measurement

Steam Generator Fuel Measurement

Natural gas fuel used in Project steam generators will be measured by orifice meter runs using multivariable differential pressure and gauge pressure transmitters. Flow calculations will conform to American Gas Association standards and will be performed in the steam generator's programmable logic control system.

Specific components for fuel gas metering and control are listed below.

Measurement or Control Location	Measurement or Control Component
Primary Fuel Meter Run	Rosemount 3095M DP & GP Transmitters with RTD Sensor Element (or equivalent)
Primary Fuel Control Element	Maxon Smartlink Fuel Flow Control Valve with Actuator (or equivalent)
Secondary Fuel Meter Run	Rosemount 3095M/DP & GP Transmitters with RTD Sensor Element (or equivalent)
Secondary Fuel Control Element	Maxon Smartlink Fuel Flow Control Valve with Actuator (or equivalent)
Center Fuel Meter Run	Rosemount 3095M DP & GP Transmitters with RTD Sensor Element (or equivalent).
Center Fuel Control Element	Maxon Smartlink Fuel Flow Control Valve with Actuator (or equivalent)

Additional specifications for Rosemount 3095M DP & GP transmitters and flow elements are included in Attachment E.

Overall fuel gas flow to each steam generator will also be controlled to on-off status. In accordance with NFPA 85 (2011 edition), Section 5.4.2.3, each steam generator's fuel gas line to the main burner will be equipped with two safety shutoff valves in series. A flame scanner will continuously monitor the presence of flame in the burner. On detection of loss of flame, the burner management system will close both fuel shut-off valves to prevent flow of fuel. Each shut-off valve will include a proof of closure switch, and a listed automatic valve proving system to ensure fuel shutoff. This design eliminates venting space between the valves as a means of assuring fuel shut-off. Therefore, unburnt fuel gas will not be vented from the steam generators.

Sulfatreat® Monitoring and Media Replacement Procedures

SulfaTreat Performance Monitoring and Bed Replacement

The proposed solid-bed SulfaTreat® produced gas sweetening system will be monitored for sulfur compound removal efficiency.

Hydrogen-sulfide and total Sulfur will be monitored using a sampling chromatographic gas analyzer. Data for produced gas flow rate, temperature, and pressure will also be collected.

Gas sampling will occur at the following locations:

1) Inlet to the lead SulfaTreat® vessel,
2) Transition between the lead and lag SulfaTreat® vessel, and
3) Outlet of the lag SulfaTreat® vessel.

The inlet monitoring location will document the sulfur compound concentration in the produced gas. The second monitoring location will detect when the lead vessel sulfur removal media has been exhausted (i.e. sulfur breakthrough). The third monitoring location will document that the sulfur removal system is working as designed. The monitoring system will also generate notifications indicating excess sulfur in the outlet of either vessel.

Upon notification of sulfur breakthrough, the lead and lag vessels will be reversed and media replacement on the previous lead vessel will be planned, scheduled and initiated. During media replacement, one vessel will perform all required sulfur removal. On-line monitoring will continue during media replacement to assure the produced gas meets the outlet requirements.

A general procedure for replacement of solid bed sweetening media in the hydrogen sulfide removal vessels would follow these steps:

1. Receive notification of condition requiring media replacement; plan and schedule work.
2. Isolate vessel for media replacement from process flow. This will generally have been the lead vessel.
3. Complete energy control procedures to removal all potential hazards.
4. Purge produced gas to second vessel.
5. Remove spent media.
6. Load fresh media into vessel.
7. Place vessel into service.

Spent media is non-hazardous and will be sent to an appropriate facility. Transportation of new and spent media is included in the Air Quality Impact Assessment.

Gas Flaring Scenarios

Flaring Scenarios

A number of operational scenarios that could potentially result in gas flow to the flare were evaluated. There are no flare scenarios which are expected to result in more than 1.5 hours/day use of the emergency flare. Untreated gas could potentially be flared in the event that there is excess pressure in produced gas system. A summary of the potential emergency flaring scenarios is provided below:

Scenario Number	Flaring Scenario	Gas Flared	Facility Response	Maximum Flaring Durations	Expected Flow, H2S Concentration and SOx Emissions
1	Power Outage: Residual system pressure would result in the flow of treated produced gas to the emergency flare.	Sweetened produced gas may be routed to emergency flare	Automated shutdown of field production system.	5 minutes/day 0.33 hr/yr	0.736 MSCFD, 150 ppmv 0.02 lbs/day
2	Excess pressure: Blockage in flow path of produced gas system	Un-sweetened produced gas may be routed to emergency flare	Automated shutdown of field production system.	5 minutes/day 0.33 hr/yr	0.736 MSCFD, 1% TS, 1.32 lb/day; 0.003 T/yr
3	Excess pressure: Blockage in flow path in free water knockout vessel or treater	A mixture of utility provided gas and un-sweetened produced gas may be routed to emergency flare	Automated shutdown of field production system. Gas flow to flare continues until vessel pressure drops below MAWP of 125 psig	15 minutes/day 6 hrs/year	0.150 MSCFD, 1% TS, 0.27 lb/day; 0.003 T/yr
4	Shutdown of 62.5 MM BTU/hr produced gas steam generator (Modeled worst case)	Sweetened produced gas may be routed to emergency flare	Redirect gas flow to 85 MMBTU/hr SGs or automated shutdown of field production system.	90 minutes per day 180 hrs/yr	57 MSCFD, 80 ppmv 0.82 lbs/day; 0.05 T/yr
5	Excess pressure in production group station	Not expected to result in emergency flare use	Automated shutdown of field production system prior to reaching group station MAWP	N/A	
6	Excess pressure in sweetening vessels	Not expected to result in emergency flare use	Discharge pressure of upstream systems cannot exceed MAWP of Sweetening vessels	N/A	

ATTACHMENT F

Material Safety Data Sheets

- Amerlock 400
- Amershield
- Hempadur 15570
- Hempadur 17369
- Surftreat
- Interseal 670

Amerlock 400

1. IDENTIFICATION OF THE SUBSTANCE/PREPARATION AND OF THE COMPANY/UNDERTAKING

Product information

Trade name	:	AMERLOCK 2 C CURE
Technical data sheet number	:	For further information see Technical Data Sheet.
Recommended use	:	coating
Company	:	PPG Coatings SPRL/BVBA Noordersingel 23 B-2040 Borgerhout
Telephone	:	+32 3 3606470
Telefax	:	+32 3 3606435
Emergency telephone number	:	**+31 20 4075210**
E-mail address	:	**PMC.Safety@PPG.com**

2. HAZARDS IDENTIFICATION

Symbol(s) :
Corrosive
Dangerous for the environment

Hazardous components :
3-aminomethyl-3,5,5-trimethylcyclohexylamine

R-phrase(s) :
FLAMMABLE.
HARMFUL BY INHALATION AND IF SWALLOWED.
CAUSES BURNS.
MAY CAUSE SENSITIZATION BY SKIN CONTACT.
TOXIC TO AQUATIC ORGANISMS, MAY CAUSE LONG-TERM ADVERSE EFFECTS IN THE AQUATIC ENVIRONMENT.

3. COMPOSITION/INFORMATION ON INGREDIENTS

Components	EC No.	CAS-No.	DSD	Note	Classification	Concentration
benzyl alcohol	202-859-9	100-51-6	19th		Xn; R20/22	>=2.50 - <10.00%
cyclohexanone	203-631-1	108-94-1	19th		R10 Xn; R20	>=2.50 - <10.00%
isobutyl methyl ketone	203-550-1	108-10-1	25th		F; R11 Xn; R20 Xi; R36/37 R66	>=10.00 - <20.00%

iso-butanol	201-148-0	78-83-1	25th		R67 R10 Xi; R37/38, R41	>=1.00 - <2.50%
2,4,6-tris-(dimethylaminomethyl)-phenol	202-013-9	90-72-2	19th		Xn; R22 Xi; R36/38	>=2.50 - <10.00%
triethylenetetramine	203-950-6	112-24-3	29th		Xn; R21 C; R34 R43 R52, R53	>=0.10 - <1.00%
3-aminomethyl-3,5,5-trimethylcyclohexylamine	220-666-8	2855-13-2	29th		Xn; R21/22 C; R34 R43 R52, R53	>=5.00 - <10.00%
nonylphenol	246-672-0	25154-52-3	29th		Repr.Cat.3; R62 Repr.Cat.3; R63 Xn; R22 C; R34 N; R50, R53	>=2.50 - <5.00%
2-(8-Heptadecenyl)-4,5-dihydro-1H-imidazole-1-ethylamine	222-551-8	3528-63-0			C; R34 Xn; R22 N; R51/53	>=0.10 - <1.00%

Producer declares that for R-phrases not mentioned in chapters 3, the entire amount of hazardous substances is below limits. For components with an occupational threshold limit value see chapter 8.

If multiple components with identical identifiers appear, these have different hazardous properties, e.g. flashpoint.

4. FIRST AID MEASURES

General advice : When symptoms persist or in all cases of doubt seek medical advice. Never give anything by mouth to an unconscious person.

Eye contact : Irrigate copiously with clean, fresh water for at least 10 minutes, holding the eyelids apart. Remove contact lenses. Seek medical advice.

Skin contact : Take off all contaminated clothing immediately. Wash skin thoroughly with soap and water or use recognized skin cleanser. Do NOT use solvents or thinners.

Inhalation : Remove to fresh air. Keep patient warm and at rest. If breathing is irregular or stopped, administer artificial respiration. If unconscious place in recovery position and seek medical advice.

Ingestion : If accidently swallowed obtain immediate medical attention. Keep at rest. Do NOT induce vomiting.

Burns : If spills on clothing catch fire, wash with plenty of water. Remove loose clothing. Do not remove clothing that has melted to the skin.Obtain medical attention.

5. FIRE-FIGHTING MEASURES

Specific hazards during fire fighting : As the product contains combustible organic components, fire will produce dense black smoke containing hazardous products of combustion (see section 10). Exposure to decomposition products may be a hazard to health. Cool closed containers exposed to fire with water spray. Do not allow run-off from fire fighting to enter drains or water courses.

Special protective equipment for fire-fighters	:	In the event of fire, wear self-contained breathing apparatus.
Suitable extinguishing media	:	Use water spray, alcohol-resistant foam, dry chemical or carbon dioxide. Keep containers and surroundings cool with water spray.
Extinguishing media which shall not be used for safety reasons	:	Do NOT use water jet.

6. ACCIDENTAL RELEASE MEASURES

Personal precautions	:	Use personal protective equipment. Ventilate the area. Refer to protective measures listed in sections 7 and 8. Wear respiratory protection. Beware of vapours accumulating to form explosive concentrations. Vapours can accumulate in low areas. Remove all sources of ignition.
Environmental precautions	:	Try to prevent the material from entering drains or water ways. If the product contaminates rivers and lakes or drains inform respective authorities.
Methods for cleaning up	:	Clean with detergents. Avoid solvents. Contain and collect spillage with non-combustible absorbent material, (e.g. sand, earth, diatomaceous earth, vermiculite) and place in container for disposal according to local / national regulations (see section 13).
Additional advice	:	Refer to section 15 for specific national regulation.

7. HANDLING AND STORAGE

Handling

Safe handling advice	:	Avoid exceeding of the given occupational exposure limits (see section 8). Use only in area provided with appropriate exhaust ventilation. Avoid contact with skin, eyes and clothing. Smoking, eating and drinking should be prohibited in the application area. Avoid inhalation of vapour or mist. For personal protection see section 8.
Advice on protection against fire and explosion	:	Prevent the creation of flammable or explosive concentrations of vapour in air and avoid vapour concentration higher than the occupational exposure limits. When transferring from one container to another apply earthing measures and use conductive hose material. No sparking tools should be used. Operators should wear anti-static footwear and clothing and floors should be of the conducting type. Isolate from sources of heat, sparks and open flame. Take necessary action to avoid static electricity discharge (which might cause ignition of organic vapours). The product should only be used in areas from which all naked lights and other sources of ignition have been excluded. No smoking. The accumulation of contaminated rags and dry overspray, particularly in spray booth filters, may result in spontaneous combustion. Good housekeeping standards, regular safe removal of waste materials and regular maintenance of spray booth filters will minimise the risks of spontaneous combustion and other fire hazards.

Storage

Requirements for storage areas and containers	:	Observe label precautions. Prevent unauthorized access. Containers which are opened must be carefully resealed and kept upright to prevent leakage. Store between 5 and 30°C (41 - 86 F) in a dry, well ventilated place away from sources of heat, ignition and direct sunlight. Solvent vapours are heavier than air and may spread along floors. Vapours may form explosive mixtures with air. Electrical installations / working materials must comply with the technological safety standards. Keep away from sources of ignition - No smoking. Store in accordance with the particular national regulations (see section 15).
Advice on common storage	:	Keep away from oxidising agents and strongly acid or alkaline materials.

8. EXPOSURE CONTROLS/PERSONAL PROTECTION

Components on the national list and/or the European TLV list (98/24/EC):

Components	CAS-No.	Value [mg/m^3]	Value [ppm]	Basis
cyclohexanone *can be absorbed through skin*	108-94-1	40.8 81.6	10 20	EU ELV TWA EU ELV STEL
isobutyl methyl ketone	108-10-1	83 208	20 50	EU ELV TWA EU ELV STEL

Personal protective equipment

General advice

Respiratory protection : When operators, whether spraying or not, have to work inside the spray booth, ventilation is unlikly to be sufficient to control particulates and solvent vapour in all cases. In such circumstances they should wear a compressed air-fed respirator during the spraying process and until such time as the particulates and solvent vapour concentration has fallen below the exposure limits.

Hand protection : For prolonged or repeated contact use protective gloves.
Barrier creams may help to protect the exposed areas of skin, they should however not be applied once exposure has occurred.
Skin should be washed after contact.
Use chemical resistant gloves classified under Standard EN 374: Protective gloves against chemicals and micro-organisms.

Recommended gloves: Product is corrosive. Please contact your hand protection supplier for further advice.

When prolonged or frequently repeated contact may occur, a glove with a protection class of 6 (breakthrough time greater than 480 minutes according to EN 374) is recommended. When only brief contact is expected, a glove with a protection class of 2 or higher (breakthrough time greater than 30 minutes according to EN 374) is recommended.
NOTICE: The selection of a specific glove for a particular application and duration of use in a workplace should also take into account all relevant workplace factors such as, but not limited to: Other chemicals which may be handled, physicalrequirements (cut/puncture protection, dexterity, thermal protection), potential body reactions toglovematerials, as wellas the instructions/specifications provided by the glove supplier.

Eye protection : Chemical resistant goggles must be worn.

Skin and body protection : Personnel should wear protective clothing. Skin should be washed after contact. Working clothes must not consist of textiles, which show a dangerous melting behaviour in case of fire. Workers should wear antistatic footwear.

Additional advice

Environmental protection : Refer to national regulations in chapter 15 for regulations on environmental protection.

Personal protection

Protective equipment : P3A3 full-face combi mask, safety gloves, safety suit and boots

Please contact your personal protection equipment supplier for further advice

9. PHYSICAL AND CHEMICAL PROPERTIES

Form	:	viscous
Colour	:	
Odour	:	strong amine-like
Flash point	:	24.0 °C Note: Calculated
Autoignition temperature	:	
Upper explosion limit	:	9.42 %(V) 384.72 g/m3
Lower explosion limit	:	1.54 %(V) 63.29 g/m3
Density	:	1.36 g/cm3 at 20 °C
Water solubility	:	partly soluble
pH	:	
Viscosity, dynamic	:	80,000 mPa.s
Flow time	:	>= 60 s Transversal section: 6 mm Method: ISO 2431 (EN 535) 6 mm CUP

10. STABILITY AND REACTIVITY

Conditions to avoid	:	Avoid temperatures above 60°C (140 F), direct sunlight and contact with sources of heat.
Hazardous reactions	:	Keep away from oxidising agents, strongly alkaline and strongly acid materials in order to avoid exothermic reactions.
Hazardous decomposition products	:	In case of fire hazardous decomposition products may be produced such as: Carbon dioxide (CO2), carbon monoxide (CO), oxides of nitrogen (NOx), dense black smoke.

11. TOXICOLOGICAL INFORMATION

Product information	:	There is no data available for this product. The preparation has been assessed following the conventional method of the Dangerous Preparations Directive 1999/45/EC and classified for toxicological hazards accordingly. See Sections 3 and 15 for details.
Acute oral toxicity	:	May cause nausea, abdominal spasms and irritation of the mucous membranes.

Acute inhalation toxicity : Exposure to component solvent vapours concentration in excess of the stated occupational exposure limit may result in adverse health effects. Such as: mucous membrane irritation, respiratory system irritation, adverse effects on kidney, liver and central nervous system. Symptoms and signs: headache, dizziness, fatigue, muscular weakness, drowsiness and in extreme cases loss of consciousness.

Skin irritation : Repeated or prolonged contact with the preparation may cause removal of natural fat from the skin resulting in desiccation of the skin. The product may be absorbed through the skin.

Eye contact : May cause irreversible eye damage.

Further information : There is no data available for this product.

Acute Toxicity Data for Components

benzyl alcohol(100-51-6)

Acute oral toxicity : LD50: 1,230 mg/kg (rat)
Acute dermal toxicity : LD50: 2,000 mg/kg (rabbit)

cyclohexanone(108-94-1)

Acute oral toxicity : LD50: 1,890 mg/kg (rat)
Acute dermal toxicity : LD50: 950 mg/kg (rabbit)

2,4,6-tris-(dimethylaminomethyl)-phenol(90-72-2)

Acute oral toxicity : LD50: 1,200 mg/kg (rat)

triethylenetetramine(112-24-3)

Acute dermal toxicity : LD50: 805 mg/kg (rabbit)

3-aminomethyl-3,5,5-trimethylcyclohexylamine(2855-13-2)

Acute oral toxicity : LD50: 1,030 mg/kg (rat)

nonylphenol(25154-52-3)

Acute oral toxicity : LD50: 1,620 mg/kg (rat)
Acute inhalation toxicity : LC50: 2 mg/l (rat)

12. ECOLOGICAL INFORMATION

Further information : No data is available on the product itself.The preparation has been assessed following the conventional method of the Dangerous Preparations Directive 1999/45/EC and is classified for ecotoxicological properties accordingly. See sections 3 and 15 for details.The product should not be allowed to enter drains, water courses or the soil.

13. DISPOSAL CONSIDERATIONS

Product : The product should not be allowed to enter drains, water courses or the soil. Disposal together with normal waste is not allowed. Special disposal required according to local regulations.

Waste key for the unused product : The European Waste Catalogue classification of this product, when disposed of as waste is:

08 01 11 Waste paint and varnish containing organic solvents or other dangerous substances.

If this product is fully cured or mixed with other wastes, this code may no longer apply. If mixed with other wastes, the appropriate code should be assigned. For further information contact your local waste authority

14. TRANSPORT INFORMATION

Transport within user's premises: always transport in closed containers that are upright, labelled and secure. Ensure that persons transporting the product know what to do in the event of an accident or spillage.

Transport to be in accordance with ADR for road, IMDG for sea and IATA for air transport:

UN-Number	:	3469
Proper shipping name	:	PAINT RELATED MATERIAL, FLAMMABLE, CORROSIVE
Class	:	3
Sub Class	:	8
Packing group	:	III
Label	:	3 + 8
Proper shipping name (ADR)	:	PAINT RELATED MATERIAL, FLAMMABLE, CORROSIVE

Marine Pollutant (IMDG)	:	Marine Pollutant
Marine Pollutant component (IMDG)	:	nonylphenol
EmS (IMDG)	:	F-E, S-C
Limited quantity (ADR)	:	Max. per inner pack. : 5.00 L Max. per outer pack. : 30.00 KG
Limited quantity (IMDG)	:	Max. per inner pack. : 5.00 L Max. per outer pack. : 30.00 KG

15. REGULATORY INFORMATION

The product is classified and labelled in accordance with Directive 1999/45/EC.

Corrosive

Dangerous for the environment

Hazardous components which must be listed on the label:

- 3-aminomethyl-3,5,5-trimethylcyclohexylamine

R-phrase(s)	:	R10	Flammable.
		R20/22	Harmful by inhalation and if swallowed.
		R34	Causes burns.
		R43	May cause sensitization by skin contact.
		R51/53	Toxic to aquatic organisms, may cause long-term adverse effects in the aquatic environment.

S-phrase(s)	:	S23	Do not breathe spray.
		S26	In case of contact with eyes, rinse immediately with plenty of water and seek medical advice.
		S36/37/39	Wear suitable protective clothing, gloves and eye/face protection.
		S38	In case of insufficient ventilation, wear suitable respiratory equipment.
		S45	In case of accident or if you feel unwell, seek medical advice immediately (show the label where possible).
		S61	Avoid release to the environment. Refer to special instructions/ Safety data sheets.

The information contained in this safety data sheet does not constitute the user's own assessment of workplace risks, as required by other health and safety legislation. The provisions of the national health and safety at work regulations apply to the use of this product at work.

National legislation

16. OTHER INFORMATION

Explanation of R-phrases mentioned in section 3

benzyl alcohol	R20/22	Harmful by inhalation and if swallowed.
cyclohexanone	R10	Flammable.
	R20	Harmful by inhalation.
isobutyl methyl ketone	R11	Highly flammable.
	R20	Harmful by inhalation.
	R36/37	Irritating to eyes and respiratory system.
	R66	Repeated exposure may cause skin dryness or cracking.
iso-butanol	R10	Flammable.
	R37/38	Irritating to respiratory system and skin.
	R41	Risk of serious damage to eyes.
	R67	Vapours may cause drowsiness and dizziness.
2,4,6-tris-(dimethylaminomethyl)-phenol	R22	Harmful if swallowed.
	R36/38	Irritating to eyes and skin.
triethylenetetramine	R21	Harmful in contact with skin.
	R34	Causes burns.
	R43	May cause sensitization by skin contact.
	R52/53	Harmful to aquatic organisms, may cause long-term adverse effects in the aquatic environment.
3-aminomethyl-3,5,5-trimethylcyclohexylamine	R21/22	Harmful in contact with skin and if swallowed.
	R34	Causes burns.
	R43	May cause sensitization by skin contact.
	R52/53	Harmful to aquatic organisms, may cause long-term adverse effects in the aquatic environment.

nonylphenol	R22	Harmful if swallowed.
	R34	Causes burns.
	R62	Possible risk of impaired fertility.
	R63	Possible risk of harm to the unborn child.
	R50/53	Very toxic to aquatic organisms, may cause long-term adverse effects in the aquatic environment.
2-(8-Heptadecenyl)-4,5-dihydro-1H-imidazole-1-ethylamine	R22	Harmful if swallowed.
	R34	Causes burns.
	R51/53	Toxic to aquatic organisms, may cause long-term adverse effects in the aquatic environment.

This Safety Data Sheet is based on the Safety Data Sheets obtained from the producer/manufacturer or/and internet databases and valid regulations considering hazardous substances/preparations.

Training advice:
Persons taking part in a turnover of hazardous products ought to be trained in product handling, safety and hygiene.

Drivers ought to be trained and obtain a certificate in accordance with the requirements of transport regulations (ADR).

Version: 2 Revision date 29.06.2009

The information contained in this safety data sheet is based on the present state of knowledge and current European and National legislation at the date of issue. The supplier reserves the right to modify data on the safety data sheet without further notice. Any change in data will normally be followed by the issue of a new safety data sheet. The user should check the date of issue and if more than 12 months have elapsed, then the data should only be used after checking with the nearest sales office of the supplier to establish that the data is still valid. As the specific conditions of use of the product are outside the suppliers control, the supplier is not reponsible for the (negative) consequences of these specific conditions of use, which are outside of the suppliers control and which are not compliant with the handling, storage and other instructions in this safety data sheet.
After all component(s) stated on the relevant Technical Data Sheet have been mixed the safety precautions mentioned on each of the component(s) safety data sheets and labels should be used in assessing the safety precautions of the mixed product.
Technical data sheet number XX

1. IDENTIFICATION OF THE SUBSTANCE/PREPARATION AND OF THE COMPANY/UNDERTAKING

Product information

Trade name : AMERLOCK 2/400 RESIN

Recommended use : coating

Company : PPG Coatings SPRL/BVBA
Noordersingel 23
B-2040 Borgerhout

Telephone : +32 3 3606470

Telefax : +32 3 3606435

Emergency telephone number : **+31 20 4075210**

E-mail address : **PMC.Safety@PPG.com**

2. HAZARDS IDENTIFICATION

Symbol(s) :
Irritant
Dangerous for the environment

Hazardous components :
reaction product: bisphenol-A-(epichlorhydrin) epoxy resin (number average molecularweight ≤ 700)

R-phrase(s) :
FLAMMABLE.
IRRITATING TO EYES AND SKIN.
MAY CAUSE SENSITIZATION BY SKIN CONTACT.
TOXIC TO AQUATIC ORGANISMS, MAY CAUSE LONG-TERM ADVERSE EFFECTS IN THE AQUATIC ENVIRONMENT.
P-phrase(s) :
Contains epoxy constituents. See information supplied by the manufacturer.

3. COMPOSITION/INFORMATION ON INGREDIENTS

Components	EC No.	CAS-No.	DSD	Note	Classification	Concentration
Solvent naphtha (petroleum), light arom.	265-199-0	64742-95-6		Nota H, Nota P	R10 N; R51/53 Xn; R65 Xi; R37 R66 R67	>=2.50 - <10.00%

mesitylene	203-604-4	108-67-8	29th		R10 Xi; R37 N; R51, R53	>=0.10 - <1.00%
reaction product: bisphenol-A-(epichlorhydrin) epoxy resin (number average molecularweight ≤ 700)		25068-38-6	29th		Xi; R36/38 R43 N; R51, R53	>=50.00 - <75.00%
1,2,4-trimethylbenzene	202-436-9	95-63-6	24th		R10 Xn; R20 Xi; R36/37/38 N; R51, R53	>=1.00 - <2.50%
cumene	202-704-5	98-82-8	26th		R10 Xn; R65 Xi; R37 N; R51, R53	>=0.10 - <1.00%

Producer declares that for R-phrases not mentioned in chapters 3, the entire amount of hazardous substances is below limits. For components with an occupational threshold limit value see chapter 8. The benzene content of this product is less than 0.1%. Nota P and H apply.

If multiple components with identical identifiers appear, these have different hazardous properties, e.g. flashpoint.

4. FIRST AID MEASURES

General advice : When symptoms persist or in all cases of doubt seek medical advice. Never give anything by mouth to an unconscious person.

Eye contact : Irrigate copiously with clean, fresh water for at least 10 minutes, holding the eyelids apart. Remove contact lenses. Seek medical advice.

Skin contact : Take off all contaminated clothing immediately. Wash skin thoroughly with soap and water or use recognized skin cleanser. Do NOT use solvents or thinners.

Inhalation : Remove to fresh air. Keep patient warm and at rest. If breathing is irregular or stopped, administer artificial respiration. If unconscious place in recovery position and seek medical advice.

Ingestion : If accidently swallowed obtain immediate medical attention. Keep at rest. Do NOT induce vomiting.

Burns : If spills on clothing catch fire, wash with plenty of water. Remove loose clothing. Do not remove clothing that has melted to the skin.Obtain medical attention.

5. FIRE-FIGHTING MEASURES

Specific hazards during fire fighting : As the product contains combustible organic components, fire will produce dense black smoke containing hazardous products of combustion (see section 10). Exposure to decomposition products may be a hazard to health. Cool closed containers exposed to fire with water spray. Do not allow run-off from fire fighting to enter drains or water courses.

Special protective equipment for fire-fighters : In the event of fire, wear self-contained breathing apparatus.

Suitable extinguishing media : Use water spray, alcohol-resistant foam, dry chemical or carbon dioxide. Keep containers and surroundings cool with water spray.

Extinguishing media which shall not be used for safety reasons : Do NOT use water jet.

6. ACCIDENTAL RELEASE MEASURES

Personal precautions : Use personal protective equipment. Ventilate the area. Refer to protective measures listed in sections 7 and 8. Wear respiratory protection. Beware of vapours accumulating to form explosive concentrations. Vapours can accumulate in low areas. Remove all sources of ignition.

Environmental precautions : Try to prevent the material from entering drains or water ways. If the product contaminates rivers and lakes or drains inform respective authorities.

Methods for cleaning up : Clean with detergents. Avoid solvents. Contain and collect spillage with non-combustible absorbent material, (e.g. sand, earth, diatomaceous earth, vermiculite) and place in container for disposal according to local / national regulations (see section 13).

Additional advice : Refer to section 15 for specific national regulation.

7. HANDLING AND STORAGE

Handling

Safe handling advice : Avoid exceeding of the given occupational exposure limits (see section 8). Use only in area provided with appropriate exhaust ventilation. Avoid contact with skin, eyes and clothing. Smoking, eating and drinking should be prohibited in the application area. Avoid inhalation of vapour or mist. For personal protection see section 8.

Advice on protection against fire and explosion : Prevent the creation of flammable or explosive concentrations of vapour in air and avoid vapour concentration higher than the occupational exposure limits. When transferring from one container to another apply earthing measures and use conductive hose material. No sparking tools should be used. Operators should wear anti-static footwear and clothing and floors should be of the conducting type. Isolate from sources of heat, sparks and open flame. Take necessary action to avoid static electricity discharge (which might cause ignition of organic vapours). The product should only be used in areas from which all naked lights and other sources of ignition have been excluded. No smoking. The accumulation of contaminated rags and dry overspray, particularly in spray booth filters, may result in spontaneous combustion. Good housekeeping standards, regular safe removal of waste materials and regular maintenance of spray booth filters will minimise the risks of spontaneous combustion and other fire hazards.

Storage

Requirements for storage areas and containers : Observe label precautions. Prevent unauthorized access. Containers which are opened must be carefully resealed and kept upright to prevent leakage. Store between 5 and 30°C (41 - 86 F) in a dry, well ventilated place away from sources of heat, ignition and direct sunlight. Solvent vapours are heavier than air and may spread along floors. Vapours may form explosive mixtures with air. Electrical installations / working materials must comply with the technological safety standards. Keep away from sources of ignition - No smoking. Store in accordance with the particular national regulations (see section 15).

Advice on common storage : Keep away from oxidising agents and strongly acid or alkaline materials.

8. EXPOSURE CONTROLS/PERSONAL PROTECTION

Components on the national list and/or the European TLV list (98/24/EC):

Components	CAS-No.	Value [mg/m^3]	Value [ppm]	Basis

Solvent naphtha (petroleum), light arom.	64742-95-6	125		ESIG TWA
1,2,4-trimethylbenzene	95-63-6	100	20	EU ELV TWA
mesitylene	108-67-8	100	20	EU ELV TWA
cumene *can be absorbed through skin*	98-82-8	100 250	20 50	EU ELV TWA EU ELV STEL

Personal protective equipment

General advice

Respiratory protection : When operators, whether spraying or not, have to work inside the spray booth, ventilation is unlikly to be sufficient to control particulates and solvent vapour in all cases. In such circumstances they should wear a compressed air-fed respirator during the spraying process and until such time as the particulates and solvent vapour concentration has fallen below the exposure limits.

Hand protection : For prolonged or repeated contact use protective gloves.
Barrier creams may help to protect the exposed areas of skin, they should however not be applied once exposure has occurred.
Skin should be washed after contact.
Use chemical resistant gloves classified under Standard EN 374: Protective gloves against chemicals and micro-organisms.

Recommended gloves: Nitrile rubber
Minimum breakthrough time: 480 min

The recommended gloves are based on most common solvent in this product.

When prolonged or frequently repeated contact may occur, a glove with a protection class of 6 (breakthrough time greater than 480 minutes according to EN 374) is recommended. When only brief contact is expected, a glove with a protection class of 2 or higher (breakthrough time greater than 30 minutes according to EN 374) is recommended.
NOTICE: The selection of a specific glove for a particular application and duration of use in a workplace should also take into account all relevant workplace factors such as, but not limited to: Other chemicals which may be handled,physicalrequirements (cut/puncture protection, dexterity, thermal protection), potential body reactions to glovematerials, as wellas the instructions/specifications provided by the glove supplier.

Eye protection : Chemical resistant goggles must be worn.

Skin and body protection : Personnel should wear protective clothing. Skin should be washed after contact. Working clothes must not consist of textiles, which show a dangerous melting behaviour in case of fire. Workers should wear antistatic footwear.

Additional advice

Environmental protection : Refer to national regulations in chapter 15 for regulations on environmental protection.

Personal protection

Protective equipment : Eye protection, safety gloves and combi mask P1A1

Please contact your personal protection equipment supplier for further advice

9. PHYSICAL AND CHEMICAL PROPERTIES

Form	:	viscous
Colour	:	various
Odour	:	mild aromatic
Flash point	:	47.0 °C Note: Calculated
Autoignition temperature	:	Note: no data available
Upper explosion limit	:	8.16 %(V) 406.11 g/m3
Lower explosion limit	:	0.91 %(V) 45.41 g/m3
Density	:	1.49 g/cm3 at 20 °C
Water solubility	:	no data available
pH	:	no data available
Viscosity, dynamic	:	12,500 mPa.s at 23 °C
Flow time	:	>= 60 s Transversal section: 6 mm Method: ISO 2431 (EN 535) 6 mm CUP

10. STABILITY AND REACTIVITY

Conditions to avoid	:	Avoid temperatures above 60°C (140 F), direct sunlight and contact with sources of heat.
Hazardous reactions	:	Keep away from oxidising agents, strongly alkaline and strongly acid materials in order to avoid exothermic reactions.
Hazardous decomposition products	:	In case of fire hazardous decomposition products may be produced such as: Carbon dioxide (CO2), carbon monoxide (CO), oxides of nitrogen (NOx), dense black smoke.

11. TOXICOLOGICAL INFORMATION

Product information	:	There is no data available for this product. The preparation has been assessed following the conventional method of the Dangerous Preparations Directive 1999/45/EC and classified for toxicological hazards accordingly. See Sections 3 and 15 for details.

Acute oral toxicity	:	May cause nausea, abdominal spasms and irritation of the mucous membranes.
Acute inhalation toxicity	:	Exposure to component solvent vapours concentration in excess of the stated occupational exposure limit may result in adverse health effects. Such as: mucous membrane irritation, respiratory system irritation, adverse effects on kidney, liver and central nervous system. Symptoms and signs: headache, dizziness, fatigue, muscular weakness, drowsiness and in extreme cases loss of consciousness.
Skin irritation	:	Repeated or prolonged contact with the preparation may cause removal of natural fat from the skin resulting in desiccation of the skin. The product may be absorbed through the skin. Repeated skin contact may lead to irritation and to senitization, possible with cross-sensitization to other epoxies.
Eye contact	:	Irritating to eyes.
Further information	:	There is no data available for this product.

Acute Toxicity Data for Components

cumene(98-82-8)

Acute oral toxicity	:	LD50: 382 mg/kg (rat)

12. ECOLOGICAL INFORMATION

Further information	:	The preparation has been assessed following the conventional method of the Dangerous Preparations Directive 1999/45/EC and is classified for ecotoxicological properties accordingly. See sections 3 and 15 for details.

13. DISPOSAL CONSIDERATIONS

Product	:	The product should not be allowed to enter drains, water courses or the soil. Disposal together with normal waste is not allowed. Special disposal required according to local regulations.
Waste key for the unused product	:	The European Waste Catalogue classification of this product, when disposed of as waste is: 08 01 12 Waste paint and varnish other than those mentioned in 08 01 11. If this product is fully cured or mixed with other wastes, this code may no longer apply. If mixed with other wastes, the appropriate code should be assigned. For further information contact your local waste authority

14. TRANSPORT INFORMATION

Transport within user's premises: always transport in closed containers that are upright, labelled and secure. Ensure that persons transporting the product know what to do in the event of an accident or spillage.

Transport to be in accordance with ADR for road, IMDG for sea and IATA for air transport:

UN-Number	:	1263
Proper shipping name	:	PAINT
Class	:	3
Packing group	:	III
Label	:	3

Proper shipping name (ADR)	:	PAINT
Marine Pollutant (IMDG)	:	Marine Pollutant
Marine Pollutant component (IMDG)	:	epoxy resin (Mw <= 700)
EmS (IMDG)	:	F-E, S-E
Limited quantity (ADR)	:	Max. per inner pack. : 5.00 L Max. per outer pack. : 30.00 KG
Limited quantity (IMDG)	:	Max. per inner pack. : 5.00 L Max. per outer pack. : 30.00 KG

15. REGULATORY INFORMATION

The product is classified and labelled in accordance with Directive 1999/45/EC.

Irritant

Dangerous for the environment

Hazardous components which must be listed on the label:

- reaction product: bisphenol-A-(epichlorhydrin) epoxy resin (number average molecularweight ≤ 700)

R-phrase(s)	:	R10	Flammable.
		R36/38	Irritating to eyes and skin.
		R43	May cause sensitization by skin contact.
		R51/53	Toxic to aquatic organisms, may cause long-term adverse effects in the aquatic environment.
S-phrase(s)	:	S23	Do not breathe spray.
		S36/37	Wear suitable protective clothing and gloves.
		S38	In case of insufficient ventilation, wear suitable respiratory equipment.
		S61	Avoid release to the environment. Refer to special instructions/ Safety data sheets.
P-phrase(s)	:		Contains epoxy constituents. See information supplied by the manufacturer.

The information contained in this safety data sheet does not constitute the user's own assessment of workplace risks, as required by other health and safety legislation. The provisions of the national health and safety at work regulations apply to the use of this product at work.

National legislation

16. OTHER INFORMATION

This product contains a complex mixture of hydrocarbons. Detailed information can be obtained from the producer.

Explanation of R-phrases mentioned in section 3

Solvent naphtha (petroleum), light arom.	R10	Flammable.
	R51/53	Toxic to aquatic organisms, may cause long-term adverse effects in the aquatic environment.
	R65	Harmful: may cause lung damage if swallowed.
	R37	Irritating to respiratory system.
	R66	Repeated exposure may cause skin dryness or cracking.
	R67	Vapours may cause drowsiness and dizziness.
mesitylene	R10	Flammable.
	R37	Irritating to respiratory system.
	R51/53	Toxic to aquatic organisms, may cause long-term adverse effects in the aquatic environment.
reaction product: bisphenol-A-(epichlorhydrin) epoxy resin (number average molecularweight ≤ 700)	R36/38	Irritating to eyes and skin.
	R43	May cause sensitization by skin contact.
	R51/53	Toxic to aquatic organisms, may cause long-term adverse effects in the aquatic environment.
1,2,4-trimethylbenzene	R10	Flammable.
	R20	Harmful by inhalation.
	R36/37/38	Irritating to eyes, respiratory system and skin.
	R51/53	Toxic to aquatic organisms, may cause long-term adverse effects in the aquatic environment.
cumene	R10	Flammable.
	R37	Irritating to respiratory system.
	R51/53	Toxic to aquatic organisms, may cause long-term adverse effects in the aquatic environment.
	R65	Harmful: may cause lung damage if swallowed.

This Safety Data Sheet is based on the Safety Data Sheets obtained from the producer/manufacturer or/and internet databases and valid regulations considering hazardous substances/preparations.

Training advice:
Persons taking part in a turnover of hazardous products ought to be trained in product handling, safety and hygiene.

Drivers ought to be trained and obtain a certificate in accordance with the requirements of transport regulations (ADR).

Version: 1 Revision date 25.05.2009

The information contained in this safety data sheet is based on the present state of knowledge and current European and National legislation at the date of issue. The supplier reserves the right to modify data on the safety data sheet without further notice. Any change in data will normally be followed by the issue of a new safety data sheet. The user should check the date of issue and if more than 12 months have elapsed, then the data should only be used after checking with the nearest sales office of the supplier to establish that the data is still valid. As the specific conditions of use of the product are outside the suppliers control, the supplier is not reponsible for the (negative) consequences of these specific conditions of use, which are outside of the suppliers control and which are not compliant with the handling, storage and other instructions in this safety data sheet.

After all component(s) stated on the relevant Technical Data Sheet have been mixed the safety precautions mentioned on each of the component(s) safety data sheets and labels should be used in assessing the safety precautions of the mixed product.

SAFETY DATA SHEET

Version 3.7
Revision Date 03/03/2015
Print Date 07/29/2015

1. PRODUCT AND COMPANY IDENTIFICATION

1.1 Product identifiers

Product name	:	Poly(Bisphenol A-*co*-epichlorohydrin)
Product Number	:	181196
Brand	:	Aldrich
CAS-No.	:	25068-38-6

1.2 Relevant identified uses of the substance or mixture and uses advised against

Identified uses	:	Laboratory chemicals, Manufacture of substances

1.3 Details of the supplier of the safety data sheet

Company	:	Sigma-Aldrich 3050 Spruce Street SAINT LOUIS MO 63103 USA
Telephone	:	+1 800-325-5832
Fax	:	+1 800-325-5052

1.4 Emergency telephone number

Emergency Phone #	:	(314) 776-6555

2. HAZARDS IDENTIFICATION

2.1 Classification of the substance or mixture

GHS Classification in accordance with 29 CFR 1910 (OSHA HCS)
Acute toxicity, Oral (Category 4), H302
Skin corrosion (Category 1B), H314
Serious eye damage (Category 1), H318
Skin sensitisation (Category 1), H317
Carcinogenicity (Category 1B), H350
Acute aquatic toxicity (Category 2), H401
Chronic aquatic toxicity (Category 2), H411

For the full text of the H-Statements mentioned in this Section, see Section 16.

2.2 GHS Label elements, including precautionary statements

Pictogram

Signal word: Danger

Hazard statement(s)

H302	Harmful if swallowed.
H314	Causes severe skin burns and eye damage.
H317	May cause an allergic skin reaction.
H318	Causes serious eye damage.
H350	May cause cancer.
H411	Toxic to aquatic life with long lasting effects.

Precautionary statement(s)

P201	Obtain special instructions before use.

P202	Do not handle until all safety precautions have been read and understood.
P260	Do not breathe dust or mist.
P264	Wash skin thoroughly after handling.
P270	Do not eat, drink or smoke when using this product.
P272	Contaminated work clothing should not be allowed out of the workplace.
P273	Avoid release to the environment.
P280	Wear protective gloves/ protective clothing/ eye protection/ face protection.
P281	Use personal protective equipment as required.
P301 + P312 + P330	IF SWALLOWED: Call a POISON CENTER or doctor/ physician if you feel unwell. Rinse mouth.
P301 + P330 + P331	IF SWALLOWED: Rinse mouth. Do NOT induce vomiting.
P303 + P361 + P353	IF ON SKIN (or hair): Remove/ Take off immediately all contaminated clothing. Rinse skin with water/ shower.
P304 + P340 + P310	IF INHALED: Remove victim to fresh air and keep at rest in a position comfortable for breathing. Immediately call a POISON CENTER or doctor/ physician.
P305 + P351 + P338 + P310	IF IN EYES: Rinse cautiously with water for several minutes. Remove contact lenses, if present and easy to do. Continue rinsing. Immediately call a POISON CENTER or doctor/ physician.
P308 + P313	IF exposed or concerned: Get medical advice/ attention.
P333 + P313	If skin irritation or rash occurs: Get medical advice/ attention.
P363	Wash contaminated clothing before reuse.
P391	Collect spillage.
P405	Store locked up.
P501	Dispose of contents/ container to an approved waste disposal plant.

2.3 Hazards not otherwise classified (HNOC) or not covered by GHS - none

3. COMPOSITION/INFORMATION ON INGREDIENTS

3.2 Mixtures

Formula : (C15 H16 O2 . C3 H5 Cl O)x

Hazardous components

Component		Classification	Concentration
Reaction product: bisphenol-A-(epichlorhydrin) and epoxy resin (number average molecular weight <= 700)			
CAS-No. EC-No. Index-No.	25068-38-6 500-033-5 603-074-00-8	Skin Irrit. 2; Eye Irrit. 2A; Skin Sens. 1; Aquatic Acute 2; Aquatic Chronic 2; H315, H317, H319, H411	<= 100 %
Epichlorhydrin			
CAS-No. EC-No. Index-No. Registration number	106-89-8 203-439-8 603-026-00-6 01-2119457436-33-XXXX	Flam. Liq. 3; Acute Tox. 3; Skin Corr. 1B; Eye Dam. 1; Skin Sens. 1; Carc. 1B; Aquatic Acute 3; H226, H301 + H311 + H331, H314, H317, H318, H350, H402	>= 5 - < 10 %

For the full text of the H-Statements mentioned in this Section, see Section 16.

4. FIRST AID MEASURES

4.1 Description of first aid measures

General advice

Consult a physician. Show this safety data sheet to the doctor in attendance.Move out of dangerous area.

If inhaled

If breathed in, move person into fresh air. If not breathing, give artificial respiration. Consult a physician.

In case of skin contact
Take off contaminated clothing and shoes immediately. Wash off with soap and plenty of water. Consult a physician.

In case of eye contact
Rinse thoroughly with plenty of water for at least 15 minutes and consult a physician.Continue rinsing eyes during transport to hospital.

If swallowed
Do NOT induce vomiting. Never give anything by mouth to an unconscious person. Rinse mouth with water. Consult a physician.

4.2 Most important symptoms and effects, both acute and delayed
The most important known symptoms and effects are described in the labelling (see section 2.2) and/or in section 11

4.3 Indication of any immediate medical attention and special treatment needed
No data available

5. FIREFIGHTING MEASURES

5.1 Extinguishing media

Suitable extinguishing media
Use water spray, alcohol-resistant foam, dry chemical or carbon dioxide.

5.2 Special hazards arising from the substance or mixture
No data available

5.3 Advice for firefighters
Wear self-contained breathing apparatus for firefighting if necessary.

5.4 Further information
No data available

6. ACCIDENTAL RELEASE MEASURES

6.1 Personal precautions, protective equipment and emergency procedures
Use personal protective equipment. Avoid dust formation. Avoid breathing vapours, mist or gas. Ensure adequate ventilation. Evacuate personnel to safe areas. Avoid breathing dust.
For personal protection see section 8.

6.2 Environmental precautions
Prevent further leakage or spillage if safe to do so. Do not let product enter drains. Discharge into the environment must be avoided.

6.3 Methods and materials for containment and cleaning up
Pick up and arrange disposal without creating dust. Sweep up and shovel. Keep in suitable, closed containers for disposal.

6.4 Reference to other sections
For disposal see section 13.

7. HANDLING AND STORAGE

7.1 Precautions for safe handling
Avoid contact with skin and eyes. Avoid formation of dust and aerosols.Further processing of solid materials may result in the formation of combustible dusts. The potential for combustible dust formation should be taken into consideration before additional processing occurs.
Provide appropriate exhaust ventilation at places where dust is formed.
For precautions see section 2.2.

7.2 Conditions for safe storage, including any incompatibilities
Keep container tightly closed in a dry and well-ventilated place.
Storage class (TRGS 510): Non-combustible, acute toxic Cat.3 / toxic hazardous materials or hazardous materials causing chronic effects

7.3 Specific end use(s)
Apart from the uses mentioned in section 1.2 no other specific uses are stipulated

8. EXPOSURE CONTROLS/PERSONAL PROTECTION

8.1 Control parameters

Components with workplace control parameters

Component	CAS-No.	Value	Control parameters	Basis
Epichlorhydrin	106-89-8	TWA	0.500000 ppm	USA. ACGIH Threshold Limit Values (TLV)
	Remarks	Upper Respiratory Tract irritation Male reproductive Confirmed animal carcinogen with unknown relevance to humans Danger of cutaneous absorption		
		Potential Occupational Carcinogen See Appendix A		
		TWA	5.000000 ppm 19.000000 mg/m3	USA. Occupational Exposure Limits (OSHA) - Table Z-1 Limits for Air Contaminants
		Skin designation The value in mg/m3 is approximate.		

8.2 Exposure controls

Appropriate engineering controls
Handle in accordance with good industrial hygiene and safety practice. Wash hands before breaks and at the end of workday.

Personal protective equipment

Eye/face protection
Face shield and safety glasses Use equipment for eye protection tested and approved under appropriate government standards such as NIOSH (US) or EN 166(EU).

Skin protection
Handle with gloves. Gloves must be inspected prior to use. Use proper glove removal technique (without touching glove's outer surface) to avoid skin contact with this product. Dispose of contaminated gloves after use in accordance with applicable laws and good laboratory practices. Wash and dry hands.

Body Protection
Complete suit protecting against chemicals, The type of protective equipment must be selected according to the concentration and amount of the dangerous substance at the specific workplace.

Respiratory protection
Where risk assessment shows air-purifying respirators are appropriate use a full-face particle respirator type N100 (US) or type P3 (EN 143) respirator cartridges as a backup to engineering controls. If the respirator is the sole means of protection, use a full-face supplied air respirator. Use respirators and components tested and approved under appropriate government standards such as NIOSH (US) or CEN (EU).

Control of environmental exposure
Prevent further leakage or spillage if safe to do so. Do not let product enter drains. Discharge into the environment must be avoided.

9. PHYSICAL AND CHEMICAL PROPERTIES

9.1 Information on basic physical and chemical properties

a)	Appearance	Form: pellets
b)	Odour	No data available
c)	Odour Threshold	No data available
d)	pH	No data available
e)	Melting point/freezing point	No data available
f)	Initial boiling point and	No data available

	boiling range	
g)	Flash point	No data available
h)	Evaporation rate	No data available
i)	Flammability (solid, gas)	No data available
j)	Upper/lower flammability or explosive limits	No data available
k)	Vapour pressure	No data available
l)	Vapour density	No data available
m)	Relative density	1.18 g/mL at 25 °C (77 °F)
n)	Water solubility	No data available
o)	Partition coefficient: n-octanol/water	No data available
p)	Auto-ignition temperature	No data available
q)	Decomposition temperature	No data available
r)	Viscosity	No data available
s)	Explosive properties	No data available
t)	Oxidizing properties	No data available

9.2 Other safety information
No data available

10. STABILITY AND REACTIVITY

10.1 Reactivity
No data available

10.2 Chemical stability
Stable under recommended storage conditions.

10.3 Possibility of hazardous reactions
No data available

10.4 Conditions to avoid
No data available

10.5 Incompatible materials
No data available

10.6 Hazardous decomposition products
Other decomposition products - No data available
In the event of fire: see section 5

11. TOXICOLOGICAL INFORMATION

11.1 Information on toxicological effects

Acute toxicity
LD50 Oral - Rat - 13,600 mg/kg
Remarks: Behavioral:Somnolence (general depressed activity). Lungs, Thorax, or Respiration:Dyspnea. Nutritional and Gross Metabolic:Weight loss or decreased weight gain.

Inhalation: No data available

Dermal: No data available

Skin corrosion/irritation
No data available

Serious eye damage/eye irritation
No data available

Respiratory or skin sensitisation
Germ cell mutagenicity
No data available

Ames test
Result: positive

Carcinogenicity

IARC:	2A - Group 2A: Probably carcinogenic to humans (Epichlorhydrin)
NTP:	Reasonably anticipated to be a human carcinogen (Epichlorhydrin)
OSHA:	No component of this product present at levels greater than or equal to 0.1% is identified as a carcinogen or potential carcinogen by OSHA.

Reproductive toxicity
No data available

No data available

Specific target organ toxicity - single exposure
No data available

Specific target organ toxicity - repeated exposure
No data available

Aspiration hazard
No data available

Additional Information
RTECS: Not available

Stomach - Irregularities - Based on Human Evidence
Stomach - Irregularities - Based on Human Evidence (Epichlorhydrin)

12. ECOLOGICAL INFORMATION

12.1 Toxicity
No data available

12.2 Persistence and degradability

Biodegradability	Result: - According to the results of tests of biodegradability this product is not readily biodegradable. Remarks: No data available

12.3 Bioaccumulative potential
No data available

12.4 Mobility in soil
No data available

12.5 Results of PBT and vPvB assessment
PBT/vPvB assessment not available as chemical safety assessment not required/not conducted

12.6 Other adverse effects
An environmental hazard cannot be excluded in the event of unprofessional handling or disposal.
Toxic to aquatic life with long lasting effects.

No data available

13. DISPOSAL CONSIDERATIONS

13.1 Waste treatment methods

Product
Offer surplus and non-recyclable solutions to a licensed disposal company. Contact a licensed professional waste disposal service to dispose of this material. Dissolve or mix the material with a combustible solvent and burn in a chemical incinerator equipped with an afterburner and scrubber.

Contaminated packaging
Dispose of as unused product.

14. TRANSPORT INFORMATION

DOT (US)
Not dangerous goods

IMDG
UN number: 3077 Class: 9 Packing group: III EMS-No: F-A, S-F
Proper shipping name: ENVIRONMENTALLY HAZARDOUS SUBSTANCE, SOLID, N.O.S. (Reaction product: bisphenol-A-(epichlorhydrin) and epoxy resin (number average molecular weight <= 700))
Marine pollutant:yes

IATA
UN number: 3077 Class: 9 Packing group: III
Proper shipping name: Environmentally hazardous substance, solid, n.o.s. (Reaction product: bisphenol-A-(epichlorhydrin) and epoxy resin (number average molecular weight <= 700))

Further information
EHS-Mark required (ADR 2.2.9.1.10, IMDG code 2.10.3) for single packagings and combination packagings containing inner packagings with Dangerous Goods > 5L for liquids or > 5kg for solids.

15. REGULATORY INFORMATION

SARA 302 Components
The following components are subject to reporting levels established by SARA Title III, Section 302:

	CAS-No.	Revision Date
Epichlorhydrin	106-89-8	2008-11-03

SARA 313 Components
The following components are subject to reporting levels established by SARA Title III, Section 313:

	CAS-No.	Revision Date
Epichlorhydrin	106-89-8	2008-11-03

SARA 311/312 Hazards
Acute Health Hazard, Chronic Health Hazard

Massachusetts Right To Know Components

	CAS-No.	Revision Date
Epichlorhydrin	106-89-8	2008-11-03

Pennsylvania Right To Know Components

	CAS-No.	Revision Date
Reaction product: bisphenol-A-(epichlorhydrin) and epoxy resin (number average molecular weight <= 700)	25068-38-6	
Epichlorhydrin	106-89-8	2008-11-03

New Jersey Right To Know Components

	CAS-No.	Revision Date
Reaction product: bisphenol-A-(epichlorhydrin) and epoxy resin (number average molecular weight <= 700)	25068-38-6	
Epichlorhydrin	106-89-8	2008-11-03

California Prop. 65 Components

WARNING! This product contains a chemical known to the	CAS-No.	Revision Date

State of California to cause cancer. Epichlorhydrin	106-89-8	2007-09-28

WARNING: This product contains a chemical known to the State of California to cause birth defects or other reproductive harm. Epichlorhydrin	CAS-No. 106-89-8	Revision Date 2007-09-28

16. OTHER INFORMATION

Full text of H-Statements referred to under sections 2 and 3.

Acute Tox.	Acute toxicity
Aquatic Acute	Acute aquatic toxicity
Aquatic Chronic	Chronic aquatic toxicity
Carc.	Carcinogenicity
Eye Dam.	Serious eye damage
Eye Irrit.	Eye irritation
Flam. Liq.	Flammable liquids
H226	Flammable liquid and vapour.
H301 + H311 + H331	Toxic if swallowed, in contact with skin or if inhaled
H302	Harmful if swallowed.
H314	Causes severe skin burns and eye damage.
H315	Causes skin irritation.
H317	May cause an allergic skin reaction.
H318	Causes serious eye damage.
H319	Causes serious eye irritation.
H350	May cause cancer.
H401	Toxic to aquatic life.
H402	Harmful to aquatic life.
H411	Toxic to aquatic life with long lasting effects.
Skin Corr.	Skin corrosion
Skin Irrit.	Skin irritation
Skin Sens.	Skin sensitisation

HMIS Rating

Health hazard:	2
Chronic Health Hazard:	*
Flammability:	0
Physical Hazard	0

NFPA Rating

Health hazard:	3
Fire Hazard:	0
Reactivity Hazard:	0

Further information

Copyright 2015 Sigma-Aldrich Co. LLC. License granted to make unlimited paper copies for internal use only.
The above information is believed to be correct but does not purport to be all inclusive and shall be used only as a guide. The information in this document is based on the present state of our knowledge and is applicable to the product with regard to appropriate safety precautions. It does not represent any guarantee of the properties of the product. Sigma-Aldrich Corporation and its Affiliates shall not be held liable for any damage resulting from handling or from contact with the above product. See www.sigma-aldrich.com and/or the reverse side of invoice or packing slip for additional terms and conditions of sale.

Preparation Information
Sigma-Aldrich Corporation
Product Safety – Americas Region
1-800-521-8956

Version: 3.7 Revision Date: 03/03/2015 Print Date: 07/29/2015

Amershield

1. IDENTIFICATION OF THE SUBSTANCE/PREPARATION AND OF THE COMPANY/UNDERTAKING

Product information

Trade name : AMERSHIELD RESIN

Recommended use : coating

Company : PPG Coatings SPRL/BVBA
Noordersingel 23
B-2040 Borgerhout

Telephone : +32 3 3606470

Telefax : +32 3 3606435

Emergency telephone number : **+31 20 4075210**

E-mail address : **PMC.Safety@PPG.com**

2. HAZARDS IDENTIFICATION

Symbol(s) :
Irritant

Hazardous components :
reaction product, mixed diamid wax

R-phrase(s) :
FLAMMABLE.
MAY CAUSE SENSITIZATION BY SKIN CONTACT.
HARMFUL TO AQUATIC ORGANISMS, MAY CAUSE LONG-TERM ADVERSE EFFECTS IN THE AQUATIC ENVIRONMENT.
VAPOURS MAY CAUSE DROWSINESS AND DIZZINESS.

3. COMPOSITION/INFORMATION ON INGREDIENTS

Components	EC No.	CAS-No.	DSD	Note	Classification	Concentration
n-butyl acetate	204-658-1	123-86-4	25th		R10 R66 R67	>=15.00 - <20.00%
1,2,3,4-tetrahydronaphthalene	204-340-2	119-64-2	24th		R19 Xi; R36/38 N; R51, R53	>=0.10 - <1.00%
xylene	215-535-7	1330-20-7	25th	Nota C	R10 Xn; R20/21 Xi; R38	>=2.50 - <10.00%
ethylbenzene	202-849-4	100-41-4	19th		F; R11 Xn; R20	>=1.00 - <2.50%

2-methoxy-1-methylethyl acetate	203-603-9	108-65-6	19th		R10 Xi; R36	>=1.00 - <2.50%
Bis(1,2,2,6,6-pentamethyl-4-piperidyl) sebacate	255-437-1	41556-26-7			N; R50/53 R43	>=0.25 - <1.00%
Methyl 1,2,2,6,6-pentamethyl-4-piperidyl sebacate	280-060-4	82919-37-7			N; R50/53 R43	>=0.10 - <0.25%
reaction product, mixed diamid wax					R43 R53	>=1.00 - <2.50%

Producer declares that for R-phrases not mentioned in chapters 3, the entire amount of hazardous substances is below limits. For components with an occupational threshold limit value see chapter 8.

If multiple components with identical identifiers appear, these have different hazardous properties, e.g. flashpoint.

4. FIRST AID MEASURES

General advice : When symptoms persist or in all cases of doubt seek medical advice. Never give anything by mouth to an unconscious person.

Eye contact : Irrigate copiously with clean, fresh water for at least 10 minutes, holding the eyelids apart. Remove contact lenses. Seek medical advice.

Skin contact : Take off all contaminated clothing immediately. Wash skin thoroughly with soap and water or use recognized skin cleanser. Do NOT use solvents or thinners.

Inhalation : Remove to fresh air. Keep patient warm and at rest. If breathing is irregular or stopped, administer artificial respiration. If unconscious place in recovery position and seek medical advice.

Ingestion : If accidently swallowed obtain immediate medical attention. Keep at rest. Do NOT induce vomiting.

Burns : If spills on clothing catch fire, wash with plenty of water. Remove loose clothing. Do not remove clothing that has melted to the skin.Obtain medical attention.

5. FIRE-FIGHTING MEASURES

Specific hazards during fire fighting : As the product contains combustible organic components, fire will produce dense black smoke containing hazardous products of combustion (see section 10). Exposure to decomposition products may be a hazard to health. Cool closed containers exposed to fire with water spray. Do not allow run-off from fire fighting to enter drains or water courses.

Special protective equipment for fire-fighters : In the event of fire, wear self-contained breathing apparatus.

Suitable extinguishing media : Use water spray, alcohol-resistant foam, dry chemical or carbon dioxide. Keep containers and surroundings cool with water spray.

Extinguishing media which shall not be used for safety reasons : Do NOT use water jet.

6. ACCIDENTAL RELEASE MEASURES

Personal precautions : Use personal protective equipment. Ventilate the area. Refer to protective measures listed in sections 7 and 8. Wear respiratory protection. Beware of vapours accumulating to form explosive concentrations. Vapours can accumulate in low areas. Remove all sources of ignition.

Environmental precautions : Try to prevent the material from entering drains or water ways. If the product contaminates rivers and lakes or drains inform respective authorities.

Methods for cleaning up : Clean with detergents. Avoid solvents. Contain and collect spillage with non-combustible absorbent material, (e.g. sand, earth, diatomaceous earth, vermiculite) and place in container for disposal according to local / national regulations (see section 13).

Additional advice : Refer to section 15 for specific national regulation.

7. HANDLING AND STORAGE

Handling

Safe handling advice : Avoid exceeding of the given occupational exposure limits (see section 8). Use only in area provided with appropriate exhaust ventilation. Avoid contact with skin, eyes and clothing. Smoking, eating and drinking should be prohibited in the application area. Avoid inhalation of vapour or mist. For personal protection see section 8.

Advice on protection against fire and explosion : Prevent the creation of flammable or explosive concentrations of vapour in air and avoid vapour concentration higher than the occupational exposure limits. When transferring from one container to another apply earthing measures and use conductive hose material. No sparking tools should be used. Operators should wear anti-static footwear and clothing and floors should be of the conducting type. Isolate from sources of heat, sparks and open flame. Take necessary action to avoid static electricity discharge (which might cause ignition of organic vapours). The product should only be used in areas from which all naked lights and other sources of ignition have been excluded. No smoking. The accumulation of contaminated rags and dry overspray, particularly in spray booth filters, may result in spontaneous combustion. Good housekeeping standards, regular safe removal of waste materials and regular maintenance of spray booth filters will minimise the risks of spontaneous combustion and other fire hazards.

Storage

Requirements for storage areas and containers : Observe label precautions. Prevent unauthorized access. Containers which are opened must be carefully resealed and kept upright to prevent leakage. Store between 5 and 30°C (41 - 86 F) in a dry, well ventilated place away from sources of heat, ignition and direct sunlight. Solvent vapours are heavier than air and may spread along floors. Vapours may form explosive mixtures with air. Electrical installations / working materials must comply with the technological safety standards. Keep away from sources of ignition - No smoking. Store in accordance with the particular national regulations (see section 15).

Advice on common storage : Keep away from oxidising agents and strongly acid or alkaline materials.

8. EXPOSURE CONTROLS/PERSONAL PROTECTION

Components on the national list and/or the European TLV list (98/24/EC):

Components	CAS-No.	Value [mg/m^3]	Value [ppm]	Basis

xylene *can be absorbed through skin*	1330-20-7	221 442	50 100	EU ELV TWA EU ELV STEL
ethylbenzene *can be absorbed through skin*	100-41-4	442 884	100 200	EU ELV TWA EU ELV STEL
2-methoxy-1-methylethyl acetate *can be absorbed through skin*	108-65-6	275 550	50 100	EU ELV TWA EU ELV STEL

Personal protective equipment

General advice

Respiratory protection : When operators, whether spraying or not, have to work inside the spray booth, ventilation is unlikly to be sufficient to control particulates and solvent vapour in all cases. In such circumstances they should wear a compressed air-fed respirator during the spraying process and until such time as the particulates and solvent vapour concentration has fallen below the exposure limits.

Hand protection : For prolonged or repeated contact use protective gloves.
Barrier creams may help to protect the exposed areas of skin, they should however not be applied once exposure has occurred.
Skin should be washed after contact.
Use chemical resistant gloves classified under Standard EN 374: Protective gloves against chemicals and micro-organisms.

Recommended gloves: Nitrile rubber
Minimum breakthrough time: 30 min

The recommended gloves are based on most common solvent in this product.

When prolonged or frequently repeated contact may occur, a glove with a protection class of 6 (breakthrough time greater than 480 minutes according to EN 374) is recommended. When only brief contact is expected, a glove with a protection class of 2 or higher (breakthrough time greater than 30 minutes according to EN 374) is recommended.
NOTICE: The selection of a specific glove for a particular application and duration of use in a workplace should also take into account all relevant workplace factors such as, but not limited to: Other chemicals which may be handled,physicalrequirements (cut/puncture protection, dexterity, thermal protection), potential body reactions to glovematerials, as wellas the instructions/specifications provided by the glove supplier.

Eye protection : Chemical resistant goggles must be worn.

Skin and body protection : Personnel should wear protective clothing. Skin should be washed after contact. Working clothes must not consist of textiles, which show a dangerous melting behaviour in case of fire. Workers should wear antistatic footwear.

Additional advice

Environmental protection : Refer to national regulations in chapter 15 for regulations on environmental protection.

Personal protection

Protective equipment : Eye protection, safety gloves and combi mask P1A1

Please contact your personal protection equipment supplier for further advice

9. PHYSICAL AND CHEMICAL PROPERTIES

Form	:	viscous
Colour	:	various
Odour	:	aromatic strong
Flash point	:	26.0 °C
Autoignition temperature	:	
Upper explosion limit	:	7.48 %(V) 355.9 g/m3
Lower explosion limit	:	1.24 %(V) 58.71 g/m3
Density	:	1.42 g/cm3 at 20 °C
Water solubility	:	no data available
pH	:	
Viscosity, dynamic	:	12,000 mPa.s at 23 °C
Flow time	:	>= 60 s Transversal section: 6 mm Method: ISO 2431 (EN 535) 6 mm CUP

10. STABILITY AND REACTIVITY

Conditions to avoid	:	Avoid temperatures above 60°C (140 F), direct sunlight and contact with sources of heat.
Hazardous reactions	:	Keep away from oxidising agents, strongly alkaline and strongly acid materials in order to avoid exothermic reactions.
Hazardous decomposition products	:	In case of fire hazardous decomposition products may be produced such as: Carbon dioxide (CO2), carbon monoxide (CO), oxides of nitrogen (NOx), dense black smoke.

11. TOXICOLOGICAL INFORMATION

Product information	:	There is no data available for this product. The preparation has been assessed following the conventional method of the Dangerous Preparations Directive 1999/45/EC and classified for toxicological hazards accordingly. See Sections 3 and 15 for details.
Acute oral toxicity	:	May cause nausea, abdominal spasms and irritation of the mucous membranes.

Acute inhalation toxicity : Exposure to component solvent vapours concentration in excess of the stated occupational exposure limit may result in adverse health effects. Such as: mucous membrane irritation, respiratory system irritation, adverse effects on kidney, liver and central nervous system. Symptoms and signs: headache, dizziness, fatigue, muscular weakness, drowsiness and in extreme cases loss of consciousness.

Skin irritation : Repeated or prolonged contact with the preparation may cause removal of natural fat from the skin resulting in desiccation of the skin. The product may be absorbed through the skin.

Eye contact : The liquid splashed in the eyes may cause irritation and reversible damage.

Further information : There is no data available for this product.

Acute Toxicity Data for Components

12. ECOLOGICAL INFORMATION

Further information : No data is available on the product itself.The preparation has been assessed following the conventional method of the Dangerous Preparations Directive 1999/45/EC and is classified for ecotoxicological properties accordingly. See sections 3 and 15 for details.The product should not be allowed to enter drains, water courses or the soil.

13. DISPOSAL CONSIDERATIONS

Product : The product should not be allowed to enter drains, water courses or the soil. Disposal together with normal waste is not allowed. Special disposal required according to local regulations.

Waste key for the unused product : The European Waste Catalogue classification of this product, when disposed of as waste is:

08 01 11 Waste paint and varnish containing organic solvents or other dangerous substances.

If this product is fully cured or mixed with other wastes, this code may no longer apply. If mixed with other wastes, the appropriate code should be assigned. For further information contact your local waste authority

14. TRANSPORT INFORMATION

Transport within user's premises: always transport in closed containers that are upright, labelled and secure. Ensure that persons transporting the product know what to do in the event of an accident or spillage.

Transport to be in accordance with ADR for road, IMDG for sea and IATA for air transport:

UN-Number	:	1263
Proper shipping name	:	PAINT
Class	:	3
Packing group	:	III
Label	:	3
Proper shipping name (ADR)	:	PAINT

Marine Pollutant (IMDG)	:	-
EmS (IMDG)	:	F-E, S-E

Limited quantity (ADR)	:	Max. per inner pack. : 5.00 L Max. per outer pack. : 30.00 KG
Limited quantity (IMDG)	:	Max. per inner pack. : 5.00 L Max. per outer pack. : 30.00 KG

Note

ADR: If pack sizes less than 450L, under the terms of 2.2.3.1.5, this product is not subject to the provisions of ADR.

IMDG: If pack sizes up to and including 30L, under the terms of 2.3.2.5, this product is not subject to the packaging, labelling and marking requirements of the IMDG code, but both full documentation and placarding of cargo transport units is still required.

15. REGULATORY INFORMATION

The product is classified and labelled in accordance with Directive 1999/45/EC.

Irritant

Hazardous components which must be listed on the label:

- reaction product, mixed diamid wax

R-phrase(s)	:	R10	Flammable.
		R43	May cause sensitization by skin contact.
		R52/53	Harmful to aquatic organisms, may cause long-term adverse effects in the aquatic environment.
		R67	Vapours may cause drowsiness and dizziness.

S-phrase(s)	:	S23	Do not breathe spray.
		S36/37	Wear suitable protective clothing and gloves.
		S38	In case of insufficient ventilation, wear suitable respiratory equipment.
		S61	Avoid release to the environment. Refer to special instructions/ Safety data sheets.

The information contained in this safety data sheet does not constitute the user's own assessment of workplace risks, as required by other health and safety legislation. The provisions of the national health and safety at work regulations apply to the use of this product at work.

National legislation

16. OTHER INFORMATION

Explanation of R-phrases mentioned in section 3

n-butyl acetate	R10	Flammable.
	R66	Repeated exposure may cause skin dryness or cracking.
	R67	Vapours may cause drowsiness and dizziness.
1,2,3,4-tetrahydronaphthalene	R19	May form explosive peroxides.
	R36/38	Irritating to eyes and skin.
	R51/53	Toxic to aquatic organisms, may cause long-term adverse effects in the aquatic environment.
xylene	R10	Flammable.
	R20/21	Harmful by inhalation and in contact with skin.
	R38	Irritating to skin.
ethylbenzene	R11	Highly flammable.
	R20	Harmful by inhalation.
2-methoxy-1-methylethyl acetate	R10	Flammable.
	R36	Irritating to eyes.
Bis(1,2,2,6,6-pentamethyl-4-piperidyl) sebacate	R43	May cause sensitization by skin contact.
	R50/53	Very toxic to aquatic organisms, may cause long-term adverse effects in the aquatic environment.
Methyl 1,2,2,6,6-pentamethyl-4-piperidyl sebacate	R43	May cause sensitization by skin contact.
	R50/53	Very toxic to aquatic organisms, may cause long-term adverse effects in the aquatic environment.
reaction product, mixed diamid wax	R43	May cause sensitization by skin contact.
	R53	May cause long-term adverse effects in the aquatic environment.

This Safety Data Sheet is based on the Safety Data Sheets obtained from the producer/manufacturer or/and internet databases and valid regulations considering hazardous substances/preparations.

Training advice:
Persons taking part in a turnover of hazardous products ought to be trained in product handling, safety and hygiene.

Drivers ought to be trained and obtain a certificate in accordance with the requirements of transport regulations (ADR).

Version: 3 Revision date 28.06.2009

The information contained in this safety data sheet is based on the present state of knowledge and current European and National legislation at the date of issue. The supplier reserves the right to modify data on the safety data sheet without further notice. Any change in data will normally be followed by the issue of a new safety data sheet. The user should check the date of issue and if more than 12 months have elapsed, then the data should only be used after checking with the nearest sales office of the supplier to establish that the data is still valid. As the specific conditions of use of the product are outside the suppliers control, the supplier is not reponsible for the (negative) consequences of these specific conditions of use, which are outside of the suppliers control and which are not compliant with the handling, storage and other instructions in this safety data sheet.
After all component(s) stated on the relevant Technical Data Sheet have been mixed the safety precautions mentioned on each of the component(s) safety data sheets and labels should be used in assessing the safety precautions of the mixed product.

1. IDENTIFICATION OF THE SUBSTANCE/PREPARATION AND OF THE COMPANY/UNDERTAKING

Product information

Trade name	:	AMERSHIELD CURE
Recommended use	:	coating
Company	:	PPG Coatings SPRL/BVBA Noordersingel 23 B-2040 Borgerhout
Telephone	:	+32 3 3606470
Telefax	:	+32 3 3606435
Emergency telephone number	:	**+31 20 4075210**
E-mail address	:	**PMC.Safety@PPG.com**

2. HAZARDS IDENTIFICATION

Symbol(s) :
Irritant

Hazardous components :
isocyanic acid, hexamethylene ester, polymers

R-phrase(s) :
MAY CAUSE SENSITIZATION BY SKIN CONTACT.
HARMFUL TO AQUATIC ORGANISMS, MAY CAUSE LONG-TERM ADVERSE EFFECTS IN THE AQUATIC ENVIRONMENT.
P-phrase(s) :
Contains isocyanates. See information supplied by the manufacturer.

3. COMPOSITION/INFORMATION ON INGREDIENTS

Components	EC No.	CAS-No.	DSD	Note	Classification	Concentration
n-butyl acetate	204-658-1	123-86-4	25th		R10 R66 R67	>=2.50 - <10.00%
Solvent naphtha (petroleum), light arom.	265-199-0	64742-95-6		Nota H, Nota P	R10 N; R51/53 Xn; R65 Xi; R37 R66 R67	>=2.50 - <10.00%

hexamethylene diisocyanate	212-485-8	822-06-0	19th		T; R23 Xi; R36/37/38 R42/43	>=0.10 - <0.50%
isocyanic acid, hexamethylene ester, polymers		28182-81-2			R43	>=75.00 - <100.00%

Producer declares that for R-phrases not mentioned in chapters 3, the entire amount of hazardous substances is below limits. For components with an occupational threshold limit value see chapter 8. The benzene content of this product is less than 0.1%. Nota P and H apply.

If multiple components with identical identifiers appear, these have different hazardous properties, e.g. flashpoint.

4. FIRST AID MEASURES

General advice : When symptoms persist or in all cases of doubt seek medical advice. Never give anything by mouth to an unconscious person.

Eye contact : Irrigate copiously with clean, fresh water for at least 10 minutes, holding the eyelids apart. Remove contact lenses. Seek medical advice.

Skin contact : Take off all contaminated clothing immediately. Wash skin thoroughly with soap and water or use recognized skin cleanser. Do NOT use solvents or thinners.

Inhalation : Remove to fresh air. Keep patient warm and at rest. If breathing is irregular or stopped, administer artificial respiration. If unconscious place in recovery position and seek medical advice.

Ingestion : If accidently swallowed obtain immediate medical attention. Keep at rest. Do NOT induce vomiting.

Burns : If spills on clothing catch fire, wash with plenty of water. Remove loose clothing. Do not remove clothing that has melted to the skin.Obtain medical attention.

5. FIRE-FIGHTING MEASURES

Specific hazards during fire fighting : As the product contains combustible organic components, fire will produce dense black smoke containing hazardous products of combustion (see section 10). Exposure to decomposition products may be a hazard to health. Cool closed containers exposed to fire with water spray. Do not allow run-off from fire fighting to enter drains or water courses.

Special protective equipment for fire-fighters : In the event of fire, wear self-contained breathing apparatus.

Suitable extinguishing media : Use water spray, alcohol-resistant foam, dry chemical or carbon dioxide. Keep containers and surroundings cool with water spray.

Extinguishing media which shall not be used for safety reasons : Do NOT use water jet.

6. ACCIDENTAL RELEASE MEASURES

Personal precautions : Use personal protective equipment. Ventilate the area. Refer to protective measures listed in sections 7 and 8. Wear respiratory protection. Beware of vapours accumulating to form explosive concentrations. Vapours can accumulate in low areas. Remove all sources of ignition.

Environmental precautions : Try to prevent the material from entering drains or water ways. If the product contaminates rivers and lakes or drains inform respective authorities.

Methods for cleaning up : Clean with detergents. Avoid solvents. Contain and collect spillage with non-combustible absorbent material, (e.g. sand, earth, diatomaceous earth, vermiculite) and place in container for disposal according to local / national regulations (see section 13).

Additional advice : Refer to section 15 for specific national regulation.

7. HANDLING AND STORAGE

Handling

Safe handling advice : Avoid exceeding of the given occupational exposure limits (see section 8). Use only in area provided with appropriate exhaust ventilation. Avoid contact with skin, eyes and clothing. Smoking, eating and drinking should be prohibited in the application area. Avoid inhalation of vapour or mist. For personal protection see section 8. Persons with a history of skin sensitisation problems or asthma, allergies, chronic or recurrent respiratory disease should not be employed in any process in which this preparation is being used.

Advice on protection against fire and explosion : Prevent the creation of flammable or explosive concentrations of vapour in air and avoid vapour concentration higher than the occupational exposure limits. When transferring from one container to another apply earthing measures and use conductive hose material. No sparking tools should be used. Operators should wear anti-static footwear and clothing and floors should be of the conducting type. Isolate from sources of heat, sparks and open flame. Take necessary action to avoid static electricity discharge (which might cause ignition of organic vapours). The product should only be used in areas from which all naked lights and other sources of ignition have been excluded. No smoking. The accumulation of contaminated rags and dry overspray, particularly in spray booth filters, may result in spontaneous combustion. Good housekeeping standards, regular safe removal of waste materials and regular maintenance of spray booth filters will minimise the risks of spontaneous combustion and other fire hazards.

Storage

Requirements for storage areas and containers : Observe label precautions. Prevent unauthorized access. Containers which are opened must be carefully resealed and kept upright to prevent leakage. Store between 5 and 30°C (41 - 86 F) in a dry, well ventilated place away from sources of heat, ignition and direct sunlight. Solvent vapours are heavier than air and may spread along floors. Vapours may form explosive mixtures with air. Electrical installations / working materials must comply with the technological safety standards. Keep away from sources of ignition - No smoking. Store in accordance with the particular national regulations (see section 15).

Advice on common storage : Keep away from oxidising agents, strongly acid or alkaline materials, as well as of amines, alcohols and water.

8. EXPOSURE CONTROLS/PERSONAL PROTECTION

Components on the national list and/or the European TLV list (98/24/EC):

Components	CAS-No.	Value [mg/m^3]	Value [ppm]	Basis
Solvent naphtha (petroleum), light arom.	64742-95-6	125		ESIG TWA

Personal protective equipment

General advice

Respiratory protection : When operators, whether spraying or not, have to work inside the spray booth, ventilation is unlikly to be sufficient to control particulates and solvent vapour in all cases. In such circumstances they should wear a compressed air-fed respirator during the spraying process and until such time as the particulates and solvent vapour concentration has fallen below the exposure limits. Under cool dry conditions, it is possible for the isocyanate to remain unreacted in the paint film for up to 30 hours after application. If dry flatting is unavoidable air fed respiratory protective equipment should be used.

Hand protection : For prolonged or repeated contact use protective gloves.
Barrier creams may help to protect the exposed areas of skin, they should however not be applied once exposure has occurred.
Skin should be washed after contact.
Use chemical resistant gloves classified under Standard EN 374: Protective gloves against chemicals and micro-organisms.

Recommended gloves: Nitrile rubber
Minimum breakthrough time: 30 min

The recommended gloves are based on most common solvent in this product.

When prolonged or frequently repeated contact may occur, a glove with a protection class of 6 (breakthrough time greater than 480 minutes according to EN 374) is recommended. When only brief contact is expected, a glove with a protection class of 2 or higher (breakthrough time greater than 30 minutes according to EN 374) is recommended.
NOTICE: The selection of a specific glove for a particular application and duration of use in a workplace should also take into account all relevant workplace factors such as, but not limited to: Other chemicals which may be handled,physicalrequirements (cut/puncture protection, dexterity, thermal protection), potential body reactions to glovematerials, as wellas the instructions/specifications provided by the glove supplier.

Eye protection : Chemical resistant goggles must be worn.

Skin and body protection : Personnel should wear protective clothing. Skin should be washed after contact. Working clothes must not consist of textiles, which show a dangerous melting behaviour in case of fire. Workers should wear antistatic footwear.

Additional advice

Environmental protection : Refer to national regulations in chapter 15 for regulations on environmental protection.

Personal protection
Protective equipment : Eye protection, safety gloves and combi mask P1A1

Please contact your personal protection equipment supplier for further advice

9. PHYSICAL AND CHEMICAL PROPERTIES

Form : viscous
Colour : various
Odour : slight aromatic

Flash point	:	55.7 °C
Autoignition temperature	:	>370 °C
Upper explosion limit	:	7.24 %(V) 360.89 g/m3
Lower explosion limit	:	1.02 %(V) 51.09 g/m3
Density	:	1.13 g/cm3 at 20 °C
Water solubility	:	partly soluble
pH	:	
Viscosity, dynamic	:	650 mPa.s at 23 °C
Flow time	:	>= 60 s Transversal section: 6 mm Method: ISO 2431 (EN 535) 6 mm CUP

10. STABILITY AND REACTIVITY

Conditions to avoid	:	Avoid temperatures above 60°C (140 F), direct sunlight and contact with sources of heat.
Hazardous reactions	:	Keep away from oxidising agents, strongly alkaline and strongly acid materials in order to avoid exothermic reactions.Avoid moisture.Amines and alcohols cause exothermic reactions.Preparation reacts slowly with water resulting in evolution of CO2.Evolution of CO2 in closed containers causes overpressure and produces a risk of bursting.
Hazardous decomposition products	:	In case of fire hazardous decomposition products may be produced such as: Carbon dioxide (CO2), carbon monoxide (CO), oxides of nitrogen (NOx), dense black smoke.

11. TOXICOLOGICAL INFORMATION

Product information	:	There is no data available for this product. The preparation has been assessed following the conventional method of the Dangerous Preparations Directive 1999/45/EC and classified for toxicological hazards accordingly. See Sections 3 and 15 for details.
Acute oral toxicity	:	May cause nausea, abdominal spasms and irritation of the mucous membranes.
Acute inhalation toxicity	:	Exposure to component solvent vapours concentration in excess of the stated occupational exposure limit may result in adverse health effects. Such as: mucous membrane irritation, respiratory system irritation, adverse effects on kidney, liver and central nervous system. Symptoms and signs: headache, dizziness, fatigue, muscular weakness, drowsiness and in extreme cases loss of consciousness. Isocyanates may cause acute irritation and/or sensitisation of the respiratory system leading to tightness of the chest, wheeziness and an asthmatic condition.
Skin irritation	:	Repeated or prolonged contact with the preparation may cause removal of natural fat from the skin resulting in desiccation of the skin. The product may be absorbed through the skin.
Eye contact	:	The liquid splashed in the eyes may cause irritation and reversible damage.
Further information	:	There is no data available for this product.

Acute Toxicity Data for Components

hexamethylene diisocyanate(822-06-0)

Acute oral toxicity	:	LD50: 746 mg/kg (rat)
Acute inhalation toxicity	:	LC50: 0.15 mg/l (rat, 4 h)
Acute dermal toxicity	:	LD50: 599 mg/kg (rabbit,)

12. ECOLOGICAL INFORMATION

Further information : The preparation has been assessed following the conventional method of the Dangerous Preparations Directive 1999/45/EC and is classified for ecotoxicological properties accordingly. See sections 3 and 15 for details.

13. DISPOSAL CONSIDERATIONS

Product : The product should not be allowed to enter drains, water courses or the soil. Disposal together with normal waste is not allowed. Special disposal required according to local regulations.

Waste key for the unused product : The European Waste Catalogue classification of this product, when disposed of as waste is:

08 01 11 Waste paint and varnish containing organic solvents or other dangerous substances.

If this product is fully cured or mixed with other wastes, this code may no longer apply. If mixed with other wastes, the appropriate code should be assigned. For further information contact your local waste authority

14. TRANSPORT INFORMATION

Transport within user's premises: always transport in closed containers that are upright, labelled and secure. Ensure that persons transporting the product know what to do in the event of an accident or spillage.

Transport to be in accordance with ADR for road, IMDG for sea and IATA for air transport:

UN-Number	:	1263
Proper shipping name	:	PAINT RELATED MATERIAL
Class	:	3
Packing group	:	III
Label	:	3
Proper shipping name (ADR)	:	PAINT RELATED MATERIAL

Marine Pollutant (IMDG)	:	-
EmS (IMDG)	:	F-E, S-E
Limited quantity (ADR)	:	Max. per inner pack. : 5.00 L Max. per outer pack. : 30.00 KG
Limited quantity (IMDG)	:	Max. per inner pack. : 5.00 L Max. per outer pack. : 30.00 KG

15. REGULATORY INFORMATION

The product is classified and labelled in accordance with Directive 1999/45/EC.

Irritant

Hazardous components which must be listed on the label:

- isocyanic acid, hexamethylene ester, polymers

R-phrase(s)	:	R43	May cause sensitization by skin contact.
		R52/53	Harmful to aquatic organisms, may cause long-term adverse effects in the aquatic environment.
S-phrase(s)	:	S23	Do not breathe spray.
		S36/37	Wear suitable protective clothing and gloves.
		S38	In case of insufficient ventilation, wear suitable respiratory equipment.
		S61	Avoid release to the environment. Refer to special instructions/ Safety data sheets.
P-phrase(s)	:		Contains isocyanates. See information supplied by the manufacturer.

The information contained in this safety data sheet does not constitute the user's own assessment of workplace risks, as required by other health and safety legislation. The provisions of the national health and safety at work regulations apply to the use of this product at work.

National legislation

16. OTHER INFORMATION

This product contains a complex mixture of hydrocarbons. Detailed information can be obtained from the producer.

Explanation of R-phrases mentioned in section 3

n-butyl acetate	R10	Flammable.
	R66	Repeated exposure may cause skin dryness or cracking.
	R67	Vapours may cause drowsiness and dizziness.

Solvent naphtha (petroleum), light arom.	R10	Flammable.
	R51/53	Toxic to aquatic organisms, may cause long-term adverse effects in the aquatic environment.
	R65	Harmful: may cause lung damage if swallowed.
	R37	Irritating to respiratory system.
	R66	Repeated exposure may cause skin dryness or cracking.
	R67	Vapours may cause drowsiness and dizziness.
hexamethylene diisocyanate	R23	Toxic by inhalation.
	R36/37/38	Irritating to eyes, respiratory system and skin.
	R42/43	May cause sensitization by inhalation and skin contact.
isocyanic acid, hexamethylene ester, polymers	R43	May cause sensitization by skin contact.

This Safety Data Sheet is based on the Safety Data Sheets obtained from the producer/manufacturer or/and internet databases and valid regulations considering hazardous substances/preparations.

Training advice:
Persons taking part in a turnover of hazardous products ought to be trained in product handling, safety and hygiene.

Drivers ought to be trained and obtain a certificate in accordance with the requirements of transport regulations (ADR).

Version: 2 Revision date 25.03.2009

The information contained in this safety data sheet is based on the present state of knowledge and current European and National legislation at the date of issue. The supplier reserves the right to modify data on the safety data sheet without further notice. Any change in data will normally be followed by the issue of a new safety data sheet. The user should check the date of issue and if more than 12 months have elapsed, then the data should only be used after checking with the nearest sales office of the supplier to establish that the data is still valid. As the specific conditions of use of the product are outside the suppliers control, the supplier is not reponsible for the (negative) consequences of these specific conditions of use, which are outside of the suppliers control and which are not compliant with the handling, storage and other instructions in this safety data sheet.
After all component(s) stated on the relevant Technical Data Sheet have been mixed the safety precautions mentioned on each of the component(s) safety data sheets and labels should be used in assessing the safety precautions of the mixed product.

Hempadur 15570

Safety Data Sheet
HEMPADUR 15579

Conforms to Regulation (EC) No. 1907/2006 (REACH), Annex II, as amended by Regulation (EU) No. 2015/830 - Europe

SECTION 1: Identification of the substance/mixture and of the company/undertaking

1.1 Product identifier

Product name :	HEMPADUR 15579
Product identity :	1557911150
Product type :	epoxy primer (base for multi-component product)

1.2 Relevant identified uses of the substance or mixture and uses advised against

Field of application :	buildings and metal industry. ships and shipyards.
Ready-for-use mixture :	15570 = 15579 3 vol. / 95570 1 vol. 15571 = 15579 4 vol. / 95040 1 vol.
Identified uses :	Consumer applications, Industrial applications, Used by spraying.

1.3 Details of the supplier of the safety data sheet

Company details :	HEMPEL A/S Lundtoftegårdsvej 91 DK-2800 Kgs. Lyngby Denmark Tel.: + 45 45 93 38 00 hempel@hempel.com
Date of issue :	10 February 2016
Date of previous issue :	11 December 2014.

1.4 Emergency telephone number

Emergency telephone number (with hours of operation)

+45 45 93 38 00 (08.00 - 17.00)
See section 4 First aid measures.

SECTION 2: Hazards identification

2.1 Classification of the substance or mixture

Product definition : Mixture

Classification according to Regulation (EC) No. 1272/2008 [CLP/GHS]

Flam. Liq. 3, H226	FLAMMABLE LIQUIDS - Category 3
Acute Tox. 4, H332	ACUTE TOXICITY (inhalation) - Category 4
Skin Irrit. 2, H315	SKIN CORROSION/IRRITATION - Category 2
Eye Dam. 1, H318	SERIOUS EYE DAMAGE/ EYE IRRITATION - Category 1
Skin Sens. 1, H317	SKIN SENSITIZATION - Category 1

See Section 11 for more detailed information on health effects and symptoms.

2.2 Label elements

Hazard pictograms :

Signal word :	Danger
Hazard statements :	H226 - Flammable liquid and vapor. H332 - Harmful if inhaled. H318 - Causes serious eye damage. H315 - Causes skin irritation. H317 - May cause an allergic skin reaction.

Precautionary statements :

General :	If medical advice is needed, have product container or label at hand. Keep out of reach of children.
Prevention :	Avoid breathing vapors, spray or mists. Wear protective gloves/protective clothing/eye protection/face protection. Keep away from heat, hot surfaces, sparks, open flames and other ignition sources. No smoking.
Response :	IF IN EYES: Rinse cautiously with water for several minutes. Remove contact lenses, if present and easy to do. Continue rinsing. Immediately call a POISON CENTER or doctor.
Storage :	Keep cool.
Disposal :	Dispose of contents and container in accordance with all local, regional, national and international regulations.

SECTION 2: Hazards identification

Hazardous ingredients : xylene
middle molecular epoxy resin MMW 700-1200
ethylbenzene
n-butanol
1,3-bis(12-hydroxyocta-decanamide-N-methyle)benzene

Supplemental label elements : Contains epoxy constituents. May produce an allergic reaction.

Special packaging requirements

Containers to be fitted with child-resistant fastenings : Not applicable.

Tactile warning of danger : Yes, applicable.

2.3 Other hazards

Other hazards which do not result in classification : None known.

SECTION 3: Composition/information on ingredients

3.2 Mixtures

Product/ingredient name	Identifiers	%	Regulation (EC) No. 1272/2008 [CLP]		Type
xylene	REACH #: 01-2119488216-32 EC: 215-535-7 CAS: 1330-20-7 Index: 601-022-00-9	≥10 - ≤25	Flam. Liq. 3, H226 Acute Tox. 4, H312 Acute Tox. 4, H332 Skin Irrit. 2, H315	C	[1] [2]
middle molecular epoxy resin MMW 700-1200	EC: 500-033-5 CAS: *25068-38-6	≥10 - ≤25	Skin Irrit. 2, H315 Eye Irrit. 2, H319 Skin Sens. 1, H317	-	[1]
ethylbenzene	REACH #: 01-2119489370-35 EC: 202-849-4 CAS: 100-41-4 Index: 601-023-00-4	≥3 - ≤5	Flam. Liq. 2, H225 Acute Tox. 4, H332 STOT RE 2, H373 (hearing organs) Asp. Tox. 1, H304	-	[1] [2]
n-butanol	REACH #: 01-2119484630-38 EC: 200-751-6 CAS: 71-36-3 Index: 603-004-00-6	≥3 - ≤5	Flam. Liq. 3, H226 Acute Tox. 4, H302 Skin Irrit. 2, H315 Eye Dam. 1, H318 STOT SE 3, H335 STOT SE 3, H336	-	[1]
n-butyl acetate	REACH #: 01-2119485493-29 EC: 204-658-1 CAS: 123-86-4 Index: 607-025-00-1	≥1 - ≤3	Flam. Liq. 3, H226 STOT SE 3, H336 EUH066 See Section 16 for the full text of the H statements declared above.	-	[1]

There are no additional ingredients present which, within the current knowledge of the supplier and in the concentrations applicable, are classified as hazardous to health or the environment and hence require reporting in this section.

Type

[1] Substance classified with a health or environmental hazard
[2] Substance with a workplace exposure limit, see section 8.
[3] Substance meets the criteria for PBT according to Regulation (EC) No. 1907/2006, Annex XIII
[4] Substance meets the criteria for vPvB according to Regulation (EC) No. 1907/2006, Annex XIII
[5] Substance of equivalent concern

SECTION 4: First aid measures

4.1 Description of first aid measures

General : In all cases of doubt, or when symptoms persist, seek medical attention. Never give anything by mouth to an unconscious person.

If breathing is irregular, drowsiness, loss of consciousness or cramps: Call 112 and give immediate treatment (first aid).

Eye contact : Check for and remove any contact lenses. Immediately flush eyes with plenty of water for at least 15 minutes, occasionally lifting the upper and lower eyelids. Seek immediate medical attention.

Inhalation : Remove to fresh air. Keep person warm and at rest. If not breathing, if breathing is irregular or if respiratory arrest occurs, provide artificial respiration or oxygen by trained personnel. Give nothing by mouth. If unconscious, place in recovery position and get medical attention immediately.

Skin contact : Remove contaminated clothing and shoes. Wash skin thoroughly with soap and water or use recognized skin cleanser. Do NOT use solvents or thinners.

SECTION 4: First aid measures

Ingestion :	If swallowed, seek medical advice immediately and show this container or label. Keep person warm and at rest. Do not induce vomiting unless directed to do so by medical personnel. Lower the head so that vomit will not re-enter the mouth and throat.
Protection of first-aiders :	No action shall be taken involving any personal risk or without suitable training. If it is suspected that fumes are still present, the rescuer should wear an appropriate mask or self-contained breathing apparatus. It may be dangerous to the person providing aid to give mouth-to-mouth resuscitation. Wash contaminated clothing thoroughly with water before removing it, or wear gloves.

4.2 Most important symptoms and effects, both acute and delayed

Potential acute health effects

Eye contact :	Causes serious eye damage.
Inhalation :	Harmful if inhaled.
Skin contact :	Causes skin irritation. May cause an allergic skin reaction.
Ingestion :	No known significant effects or critical hazards.

Over-exposure signs/symptoms

Eye contact :	Adverse symptoms may include the following: pain watering redness
Inhalation :	No specific data.
Skin contact :	Adverse symptoms may include the following: pain or irritation redness blistering may occur
Ingestion :	Adverse symptoms may include the following: stomach pains

4.3 Indication of any immediate medical attention and special treatment needed

Notes to physician :	Treat symptomatically. Contact poison treatment specialist immediately if large quantities have been ingested or inhaled.
Specific treatments :	No specific treatment.

SECTION 5: Firefighting measures

5.1 Extinguishing media

Extinguishing media :	Recommended: alcohol resistant foam, CO_2, powders, water spray. Not to be used: waterjet.

5.2 Special hazards arising from the substance or mixture

Hazards from the substance or mixture :	Flammable liquid and vapor. In a fire or if heated, a pressure increase will occur and the container may burst, with the risk of a subsequent explosion. Runoff to sewer may create fire or explosion hazard.
Hazardous combustion products :	Decomposition products may include the following materials: carbon oxides halogenated compounds metal oxide/oxides

5.3 Advice for firefighters

Promptly isolate the scene by removing all persons from the vicinity of the incident if there is a fire. No action shall be taken involving any personal risk or without suitable training. Fire will produce dense black smoke. Exposure to decomposition products may cause a health hazard. Cool closed containers exposed to fire with water. Do not release runoff from fire to drains or watercourses. Fire-fighters should wear appropriate protective equipment and self-contained breathing apparatus (SCBA) with a full face-piece operated in positive pressure mode. Clothing for fire-fighters (including helmets, protective boots and gloves) conforming to European standard EN 469 will provide a basic level of protection for chemical incidents.

SECTION 6: Accidental release measures

6.1 Personal precautions, protective equipment and emergency procedures

Avoid all direct contact with the spilled material. Exclude sources of ignition and be aware of explosion hazard. Ventilate the area. Avoid breathing vapor or mist. Refer to protective measures listed in sections 7 and 8. No action shall be taken involving any personal risk or without suitable training. If the product contaminates lakes, rivers, or sewers, inform the appropriate authorities in accordance with local regulations.

6.2 Environmental precautions

Avoid dispersal of spilled material and runoff and contact with soil, waterways, drains and sewers. Inform the relevant authorities if the product has caused environmental pollution (sewers, waterways, soil or air).

6.3 Methods and materials for containment and cleaning up

Stop leak if without risk. Move containers from spill area. Approach release from upwind. Prevent entry into sewers, water courses, basements or confined areas. Wash spillages into an effluent treatment plant or proceed as follows. Contain and collect spillage with non-combustible, absorbent material e.g. sand, earth, vermiculite or diatomaceous earth and place in container for disposal according to local regulations (see Section 13). Use spark-proof tools and explosion-proof equipment. Contaminated absorbent material may pose the same hazard as the spilled product.

6.4 Reference to other sections

See Section 1 for emergency contact information.
See Section 8 for information on appropriate personal protective equipment.
See Section 13 for additional waste treatment information.

SECTION 7: Handling and storage

7.1 Precautions for safe handling

Vapors are heavier than air and may spread along floors. Vapors may form explosive mixtures with air. Prevent the creation of flammable or explosive concentrations of vapors in air and avoid vapor concentrations higher than the occupational exposure limits. In addition, the product should be used only in areas from which all naked lights and other sources of ignition have been excluded. Electrical equipment should be protected to the appropriate standard. To dissipate static electricity during transfer, ground drum and connect to receiving container with bonding strap. No sparking tools should be used. Contains epoxy constituents. Avoid all possible skin contact with epoxy and amine containing products, they may cause allergic reactions.
Avoid inhalation of vapour, dust and spray mist. Avoid contact with skin and eyes. Eating, drinking and smoking should be prohibited in area where this material is handled, stored and processed. Appropriate personal protective equipment: see Section 8. Always keep in containers made from the same material as the original one.

7.2 Conditions for safe storage, including any incompatibilities

Store in accordance with local regulations. Store in a cool, well-ventilated area away from incompatible materials and ignition sources. Keep out of the reach of children. Keep away from: Oxidizing agents, strong alkalis, strong acids. No smoking. Prevent unauthorized access. Containers that are opened must be carefully resealed and kept upright to prevent leakage.

7.3 Specific end use(s)

See separate Product Data Sheet for recommendations or industrial sector specific solutions.

SECTION 8: Exposure controls/personal protection

8.1 Control parameters

Product/ingredient name	Exposure limit values
xylene	**EU OEL (Europe, 12/2009). Absorbed through skin.** STEL: 442 mg/m³ 15 minutes. STEL: 100 ppm 15 minutes. TWA: 221 mg/m³ 8 hours. TWA: 50 ppm 8 hours.
ethylbenzene	**EU OEL (Europe, 12/2009). Absorbed through skin.** STEL: 884 mg/m³ 15 minutes. STEL: 200 ppm 15 minutes. TWA: 442 mg/m³ 8 hours. TWA: 100 ppm 8 hours.

Recommended monitoring procedures

SECTION 8: Exposure controls/personal protection

If this product contains ingredients with exposure limits, personal, workplace atmosphere or biological monitoring may be required to determine the effectiveness of the ventilation or other control measures and/or the necessity to use respiratory protective equipment. Reference should be made to monitoring standards, such as the following: European Standard EN 689 (Workplace atmospheres - Guidance for the assessment of exposure by inhalation to chemical agents for comparison with limit values and measurement strategy) European Standard EN 14042 (Workplace atmospheres - Guide for the application and use of procedures for the assessment of exposure to chemical and biological agents) European Standard EN 482 (Workplace atmospheres - General requirements for the performance of procedures for the measurement of chemical agents) Reference to national guidance documents for methods for the determination of hazardous substances will also be required.

Derived effect levels

No DNELs/DMELs available.

Predicted effect concentrations

No PNECs available.

8.2 Exposure controls

Appropriate engineering controls

Arrange sufficient ventilation by local exhaust ventilation and good general ventilation to keep the airborne concentrations of vapors or dust lowest possible and below their respective threshold limit value. Ensure that eyewash stations and safety showers are proximal to the work-station location.

Individual protection measures

General : Gloves must be worn for all work that may result in soiling. Apron/coveralls/protective clothing must be worn when soiling is so great that regular work clothes do not adequately protect skin against contact with the product. Safety eyewear should be used when there is a likelihood of exposure.

Hygiene measures : Wash hands, forearms, and face thoroughly after handling compounds and before eating, smoking, using lavatory, and at the end of day.

Eye/face protection : Safety eyewear complying with an approved standard should be used when a risk assessment indicates this is necessary to avoid exposure to liquid splashes, mists, gases or dusts. If contact is possible, the following protection should be worn, unless the assessment indicates a higher degree of protection: chemical splash goggles and/or face shield. If inhalation hazards exist, a full-face respirator may be required instead.

Hand protection : Wear chemical-resistant gloves (tested to EN374) in combination with 'basic' employee training. The quality of the chemical-resistant protective gloves must be chosen as a function of the specific workplace concentrations and quantity of hazardous substances.

Since the actual work situation is unknown. Supplier of gloves should be contacted in order to find the appropriate type. Below listed glove(s) should be regarded as generic advice:

Recommended: Silver Shield / 4H gloves, polyvinyl alcohol (PVA), Viton®
May be used: nitrile rubber, neoprene rubber, butyl rubber
Short term exposure: natural rubber (latex), polyvinyl chloride (PVC)

Body protection : Personal protective equipment for the body should be selected based on the task being performed and the risks involved handling this product.
Wear suitable protective clothing. Always wear protective clothing when spraying.

Respiratory protection : Use a properly fitted, air-purifying or air-fed respirator complying with an approved standard if a risk assessment indicates this is necessary. Respirator selection must be based on known or anticipated exposure levels, the hazards of the product and the safe working limits of the selected respirator. If working areas have insufficient ventilation: When the product is applied by means that will not generate an aerosol such as, brush or roller wear half or totally covering mask equipped with gas filter of type A, when grinding use particle filter of type P. Be sure to use an approved/certified respirator or equivalent.

Environmental exposure controls

Emissions from ventilation or work process equipment should be checked to ensure they comply with the requirements of environmental protection legislation. In some cases, fume scrubbers, filters or engineering modifications to the process equipment will be necessary to reduce emissions to acceptable levels.

SECTION 9: Physical and chemical properties

9.1 Information on basic physical and chemical properties

Physical state :	Liquid.
Odor :	Solvent-like
pH :	Testing not relevant or not possible due to nature of the product.
Melting point/freezing point :	Testing not relevant or not possible due to nature of the product.
Boiling point/boiling range :	Testing not relevant or not possible due to nature of the product.
Flash point :	Closed cup: 25°C (77°F)
Evaporation rate :	Testing not relevant or not possible due to nature of the product.
Flammability :	Highly flammable in the presence of the following materials or conditions: open flames, sparks and static discharge and heat. Flammable in the presence of the following materials or conditions: oxidizing materials.
Lower and upper explosive (flammable) limits :	0.8 - 11.3 vol %
Vapor pressure :	Testing not relevant or not possible due to nature of the product.
Vapor density :	Testing not relevant or not possible due to nature of the product.
Relative density :	1.389 g/cm³
Solubility(ies) :	Partially soluble in the following materials: cold water and hot water.
Partition coefficient (LogKow) :	Testing not relevant or not possible due to nature of the product.
Auto-ignition temperature :	Lowest known value: 355°C (671°F) (n-butanol).
Decomposition temperature :	Testing not relevant or not possible due to nature of the product.
Viscosity :	Aspiration hazard (H304) Not classified. Testing not relevant due to nature of the product.
Explosive properties :	Highly explosive in the presence of the following materials or conditions: heat. Explosive in the presence of the following materials or conditions: open flames, sparks and static discharge.
Oxidizing properties :	Testing not relevant or not possible due to nature of the product.

9.2 Other information

Solvent(s) % by weight :	Weighted average: 31 %
Water % by weight :	Weighted average: 0 %
VOC content :	436 g/l
VOC content, Ready-for-use mixture :	413.1 g/l
TOC Content :	Weighted average: 375 g/l
Solvent Gas :	Weighted average: 0.103 m³/l

SECTION 10: Stability and reactivity

10.1 Reactivity

No specific test data related to reactivity available for this product or its ingredients.

10.2 Chemical stability

The product is stable.

10.3 Possibility of hazardous reactions

Under normal conditions of storage and use, hazardous reactions will not occur.

10.4 Conditions to avoid

Avoid all possible sources of ignition (spark or flame). Do not pressurize, cut, weld, braze, solder, drill, grind or expose containers to heat or sources of ignition.

10.5 Incompatible materials

Highly reactive or incompatible with the following materials: oxidizing materials.
Reactive or incompatible with the following materials: reducing materials.

SECTION 10: Stability and reactivity

10.6 Hazardous decomposition products

When exposed to high temperatures (i.e. in case of fire) harmful decomposition products may be formed:

Decomposition products may include the following materials: carbon oxides halogenated compounds metal oxide/oxides

SECTION 11: Toxicological information

11.1 Information on toxicological effects

Exposure to component solvent vapor concentrations may result in adverse health effects such as mucous membrane and respiratory system irritation and adverse effects on the kidneys, liver and central nervous system. Solvents may cause some of the above effects by absorption through the skin. Symptoms and signs include headaches, dizziness, fatigue, muscular weakness, drowsiness and, in extreme cases, loss of consciousness. Repeated or prolonged contact with the preparation may cause removal of natural fat from the skin, resulting in non-allergic contact dermatitis and absorption through the skin. If splashed in the eyes, the liquid may cause irritation and reversible damage. Accidental swallowing may cause stomach pain. Chemical lung inflammation may occur if the product is taken into the lungs via vomiting.
Epoxy and amine containing products can cause skin disorders such as allergic eczema. The allergy may arise after only a short exposure period.

Acute toxicity

Product/ingredient name	Result	Species	Dose	Exposure
xylene	LC50 Inhalation Gas.	Rat	5000 ppm	4 hours
	LC50 Inhalation Vapor	Rat	6350 ppm	4 hours
	LD50 Oral	Rat	4300 mg/kg	-
middle molecular epoxy resin MMW 700-1200	LD50 Dermal	Rat	>2000 mg/kg	-
ethylbenzene	LD50 Dermal	Rabbit	>5000 mg/kg	-
	LD50 Oral	Rat	3500 mg/kg	-
n-butanol	LC50 Inhalation Vapor	Rat	24000 mg/m³	4 hours
	LD50 Dermal	Rabbit	3400 mg/kg	-
	LD50 Oral	Rat	790 mg/kg	-
n-butyl acetate	LC50 Inhalation Vapor	Rat	>21 mg/l	4 hours
	LD50 Dermal	Rabbit	>17600 mg/kg	-
	LD50 Oral	Rat	10768 mg/kg	-

Acute toxicity estimates

Route	ATE value
Oral	20428.7 mg/kg
Dermal	5207 mg/kg
Inhalation (gases)	19027.5 ppm
Inhalation (vapors)	42.7 mg/l

Irritation/Corrosion

Product/ingredient name	Result	Species	Score	Exposure
xylene	Eyes - Severe irritant	Rabbit	-	24 hours 5 milligrams
	Skin - Moderate irritant	Rabbit	-	24 hours 500 milligrams
ethylbenzene	Skin - Mild irritant	Rabbit	-	24 hours 15 milligrams
	Respiratory - Mild irritant	Rabbit	-	-
	Eyes - Mild irritant	Rabbit	-	-
n-butanol	Eyes - Severe irritant	Rabbit	-	24 hours 2 milligrams
	Skin - Moderate irritant	Rabbit	-	24 hours 20 milligrams
n-butyl acetate	Skin - Moderate irritant	Rabbit	-	24 hours 500 milligrams
	Eyes - Mild irritant	Rabbit	-	-
	Respiratory - Mild irritant	Rabbit	-	-

Sensitizer

Product/ingredient name	Route of exposure	Species	Result
middle molecular epoxy resin MMW 700-1200	skin	Guinea pig	Sensitizing

Mutagenic effects

No known significant effects or critical hazards.

Carcinogenicity

No known significant effects or critical hazards.

Reproductive toxicity

No known significant effects or critical hazards.

Teratogenic effects

SECTION 11: Toxicological information

No known significant effects or critical hazards.

Specific target organ toxicity (single exposure)

Product/ingredient name	Category	Route of exposure	Target organs
n-butanol	Category 3	Not applicable.	Respiratory tract irritation and Narcotic effects
n-butyl acetate	Category 3	Not applicable.	Narcotic effects

Specific target organ toxicity (repeated exposure)

Product/ingredient name	Category	Route of exposure	Target organs
ethylbenzene	Category 2	Not determined	hearing organs

Aspiration hazard

Product/ingredient name	Result
ethylbenzene	ASPIRATION HAZARD - Category 1

Information on the likely routes of exposure

Routes of entry anticipated: Oral, Dermal, Inhalation.

Potential chronic health effects

Sensitization : Contains middle molecular epoxy resin MMW 700-1200, 1,3-bis(12-hydroxyocta-decanamide-N-methyle)benzene. May produce an allergic reaction.

Other information : No additional known significant effects or critical hazards.

SECTION 12: Ecological information

12.1 Toxicity

Do not allow to enter drains or watercourses.

Product/ingredient name	Result	Species	Exposure
middle molecular epoxy resin MMW 700-1200	Acute EC50 >100 mg/l	Daphnia	48 hours
	Acute LC50 >100 mg/l	Fish	96 hours
ethylbenzene	Chronic NOEC <1000 µg/l Fresh water	Algae - Pseudokirchneriella subcapitata	96 hours
n-butanol	Acute EC50 1328 mg/l	Daphnia	96 hours
	Acute LC50 1.376 mg/l	Fish	96 hours
n-butyl acetate	Acute EC50 44 mg/l	Daphnia	48 hours

12.2 Persistence and degradability

Product/ingredient name	Test	Result	Dose	Inoculum
xylene	-	>60 % - Readily - 28 days	-	-
ethylbenzene	-	>70 % - Readily - 28 days	-	-
n-butanol	OECD 301D Ready Biodegradability - Closed Bottle Test	92 % - 20 days	-	-
n-butyl acetate	-	90 % - Readily - 28 days	-	-

Product/ingredient name	Aquatic half-life	Photolysis	Biodegradability
xylene	-	-	Readily
ethylbenzene	-	-	Readily
n-butanol	-	-	Readily
n-butyl acetate	-	-	Readily

12.3 Bioaccumulative potential

Product/ingredient name	$LogP_{ow}$	BCF	Potential
xylene	3.12	8.1 - 25.9	low
middle molecular epoxy resin MMW 700-1200	2.64 - 3.78	31	low
ethylbenzene	3.6	-	low
n-butanol	1	3.16	low
n-butyl acetate	2.3	-	low

12.4 Mobility in soil

SECTION 12: Ecological information

Soil/water partition coefficient (K_{OC}) :	No known data avaliable in our database.
Mobility :	No known data avaliable in our database.

12.5 Results of PBT and vPvB assessment

PBT :	Not applicable.
vPvB :	Not applicable.

12.6 Other adverse effects

No known significant effects or critical hazards.

SECTION 13: Disposal considerations

13.1 Waste treatment methods

The generation of waste should be avoided or minimized wherever possible. Residues of the product is listed as hazardous waste. Dispose of according to all state and local applicable regulations. Waste should not be disposed of untreated to the sewer unless fully compliant with the requirements of all authorities with jurisdiction. Spillage, remains, discarded clothes and similar should be discarded in a fireproof container.

European waste catalogue no. (EWC) is given below.

European waste catalogue (EWC) : 08 01 11*

Packaging

The generation of waste should be avoided or minimized wherever possible. Waste packaging should be recycled. Incineration or landfill should only be considered when recycling is not feasible.

SECTION 14: Transport information

Transport may take place according to national regulation or ADR for transport by road, RID for transport by train, IMDG for transport by sea, IATA for transport by air.

	14.1 UN no.	14.2 Proper shipping name	14.3 Transport hazard class(es)	14.4 PG*	14.5 Env*	Additional information
ADR/RID Class	UN1263	PAINT	3	III	No.	**Special provisions** 640 (E) **Tunnel code** (D/E)
IMDG Class	UN1263	PAINT	3	III	No.	**Emergency schedules (EmS)** F-E, S-E
IATA Class	UN1263	PAINT	3	III	No.	-

PG* : Packing group
Env.* : Environmental hazards

14.6 Special precautions for user

Transport within user's premises: always transport in closed containers that are upright and secure. Ensure that persons transporting the product know what to do in the event of an accident or spillage.

14.7 Transport in bulk according to Annex II of MARPOL and the IBC Code

Not applicable.

SECTION 15: Regulatory information

15.1 Safety, health and environmental regulations/legislation specific for the substance or mixture

EU Regulation (EC) No. 1907/2006 (REACH) Annex XIV - List of substances subject to authorization - Substances of very high concern

Annex XIV

None of the components are listed.

Substances of very high concern

None of the components are listed.

Annex XVII - Restrictions on the manufacture, placing on the market and use of certain dangerous substances, mixtures and articles

Not applicable.

Other EU regulations

Seveso category This product is controlled under the Seveso III Directive.

Seveso category
P5c: Flammable liquids 2 and 3 not falling under P5a or P5b C6: Flammable (R10)

15.2 Chemical Safety Assessment

This product contains substances for which Chemical Safety Assessments are still required.

SECTION 16: Other information

Abbreviations and acronyms :

ATE = Acute Toxicity Estimate
CLP = Classification, Labelling and Packaging Regulation [Regulation (EC) No. 1272/2008]
EUH statement = CLP-specific Hazard statement
RRN = REACH Registration Number
DNEL = Derived No Effect Level
PNEC = Predicted No Effect Concentration

Full text of abbreviated H statements :

H225	Highly flammable liquid and vapor.
H226	Flammable liquid and vapor.
H302	Harmful if swallowed.
H304	May be fatal if swallowed and enters airways.
H312	Harmful in contact with skin.
H315	Causes skin irritation.
H317	May cause an allergic skin reaction.
H318	Causes serious eye damage.
H319	Causes serious eye irritation.
H332	Harmful if inhaled.
H335	May cause respiratory irritation.
H336	May cause drowsiness or dizziness.
H373 (hearing organs)	May cause damage to organs through prolonged or repeated exposure. (hearing organs)

Full text of classifications [CLP/GHS] :

Acute Tox. 4, H302	ACUTE TOXICITY (oral) - Category 4
Acute Tox. 4, H312	ACUTE TOXICITY (dermal) - Category 4
Acute Tox. 4, H332	ACUTE TOXICITY (inhalation) - Category 4
Asp. Tox. 1, H304	ASPIRATION HAZARD - Category 1
EUH066	Repeated exposure may cause skin dryness or cracking.
Eye Dam. 1, H318	SERIOUS EYE DAMAGE/ EYE IRRITATION - Category 1
Eye Irrit. 2, H319	SERIOUS EYE DAMAGE/ EYE IRRITATION - Category 2
Flam. Liq. 2, H225	FLAMMABLE LIQUIDS - Category 2
Flam. Liq. 3, H226	FLAMMABLE LIQUIDS - Category 3
Skin Irrit. 2, H315	SKIN CORROSION/IRRITATION - Category 2
Skin Sens. 1, H317	SKIN SENSITIZATION - Category 1
STOT RE 2, H373 (hearing organs)	SPECIFIC TARGET ORGAN TOXICITY (REPEATED EXPOSURE) (hearing organs) - Category 2
STOT SE 3, H335	SPECIFIC TARGET ORGAN TOXICITY (SINGLE EXPOSURE) (Respiratory tract irritation) - Category 3
STOT SE 3, H336	SPECIFIC TARGET ORGAN TOXICITY (SINGLE EXPOSURE) (Narcotic effects) - Category 3

Procedure used to derive the classification according to Regulation (EC) No. 1272/2008 [CLP/GHS]

Classification	Justification
FLAMMABLE LIQUIDS - Category 3	On basis of test data
ACUTE TOXICITY (inhalation) - Category 4	Calculation method
SKIN CORROSION/IRRITATION - Category 2	Calculation method
SERIOUS EYE DAMAGE/ EYE IRRITATION - Category 1	Calculation method
SKIN SENSITIZATION - Category 1	Calculation method

SECTION 16: Other information

Notice to reader

◤ Indicates information that has changed from previously issued version.

The information contained in this safety data sheet is based on the present state of knowledge and EU and national legislation. It provides guidance on health, safety and environmental aspects for handling the product in a safe way and should not be construed as any guarantee of the technical preformance or suitability for particular applications.
It is always the duty of the user/employer to ascertain that the work is planned and carried out in accordance with the national regulations.

Safety Data Sheet
HEMPEL'S CURING AGENT 95570

Conforms to Regulation (EC) No. 1907/2006 (REACH), Annex II, as amended by Regulation (EU) No. 2015/830 - Europe

SECTION 1: Identification of the substance/mixture and of the company/undertaking

1.1 Product identifier

Product name :	HEMPEL'S CURING AGENT 95570
Product identity :	9557000000
Product type :	Curing agent

1.2 Relevant identified uses of the substance or mixture and uses advised against

Field of application :	used only as part of two- or multi component products.
Ready-for-use mixture :	(see base component)
Identified uses :	Consumer applications, Industrial applications, Professional applications, Used by spraying.

1.3 Details of the supplier of the safety data sheet

Company details :

HEMPEL A/S
Lundtoftegårdsvej 91
DK-2800 Kgs. Lyngby
Denmark
Tel.: + 45 45 93 38 00
hempel@hempel.com

Date of issue :	12 February 2016
Date of previous issue :	6 March 2015.

1.4 Emergency telephone number

Emergency telephone number (with hours of operation)

+45 45 93 38 00 (08.00 - 17.00)
See section 4 First aid measures.

SECTION 2: Hazards identification

2.1 Classification of the substance or mixture

Product definition : Mixture

Classification according to Regulation (EC) No. 1272/2008 [CLP/GHS]

Flam. Liq. 3, H226	FLAMMABLE LIQUIDS - Category 3
Skin Irrit. 2, H315	SKIN CORROSION/IRRITATION - Category 2
Eye Dam. 1, H318	SERIOUS EYE DAMAGE/ EYE IRRITATION - Category 1
Skin Sens. 1, H317	SKIN SENSITIZATION - Category 1
Aquatic Chronic 3, H412	AQUATIC HAZARD (LONG-TERM) - Category 3

See Section 11 for more detailed information on health effects and symptoms.

2.2 Label elements

Hazard pictograms :

Signal word :	Danger
Hazard statements :	H226 - Flammable liquid and vapor. H318 - Causes serious eye damage. H315 - Causes skin irritation. H317 - May cause an allergic skin reaction. H412 - Harmful to aquatic life with long lasting effects.
Precautionary statements :	
General :	If medical advice is needed, have product container or label at hand. Keep out of reach of children.
Prevention :	Avoid breathing vapors, spray or mists. Wear protective gloves/protective clothing/eye protection/face protection. Keep away from heat, hot surfaces, sparks, open flames and other ignition sources. No smoking.
Response :	IF IN EYES: Rinse cautiously with water for several minutes. Remove contact lenses, if present and easy to do. Continue rinsing. Immediately call a POISON CENTER or doctor.
Storage :	Keep cool.
Disposal :	Dispose of contents and container in accordance with all local, regional, national and international regulations.
Hazardous ingredients :	Methylstyrenated phenol n-butanol 2,4,6-tris(dimethylaminomethyl)phenol triethylenetetramine

SECTION 2: Hazards identification

Special packaging requirements

Containers to be fitted with child-resistant fastenings : Not applicable.

Tactile warning of danger : Not applicable.

2.3 Other hazards

Other hazards which do not result in classification : None known.

SECTION 3: Composition/information on ingredients

3.2 Mixtures

Product/ingredient name	Identifiers	%	Regulation (EC) No. 1272/2008 [CLP]		Type
Methylstyrenated phenol	REACH #: 01-2119555274-38 EC: 270-966-8 CAS: 68512-30-1	≥10 - ≤25	Skin Irrit. 2, H315 Skin Sens. 1, H317 Aquatic Chronic 3, H412	-	[1]
n-butanol	REACH #: 01-2119484630-38 EC: 200-751-6 CAS: 71-36-3 Index: 603-004-00-6	≥10 - ≤15	Flam. Liq. 3, H226 Acute Tox. 4, H302 Skin Irrit. 2, H315 Eye Dam. 1, H318 STOT SE 3, H335 STOT SE 3, H336	-	[1]
xylene	REACH #: 01-2119488216-32 EC: 215-535-7 CAS: 1330-20-7 Index: 601-022-00-9	≥10 - ≤20	Flam. Liq. 3, H226 Acute Tox. 4, H312 Acute Tox. 4, H332 Skin Irrit. 2, H315	C	[1] [2]
ethylbenzene	REACH #: 01-2119489370-35 EC: 202-849-4 CAS: 100-41-4 Index: 601-023-00-4	≥3 - ≤4.5	Flam. Liq. 2, H225 Acute Tox. 4, H332 STOT RE 2, H373 (hearing organs) Asp. Tox. 1, H304	-	[1] [2]
2,4,6-tris(dimethylaminomethyl) phenol	REACH #: 01-2119560597-27 EC: 202-013-9 CAS: 90-72-2	≥3 - <5	Skin Corr. 1B, H314 Eye Dam. 1, H318 Skin Sens. 1, H317 Aquatic Chronic 3, H412	-	[1]
Fatty acids, tall-oil, compds. with (Z)-N-9-octadecenyl-1, 3-propanediamine (2:1)	EC: 295-184-4 CAS: 91845-13-5	≥1 - ≤2	Acute Tox. 4, H302 Skin Irrit. 2, H315 Eye Dam. 1, H318 Aquatic Acute 1, H400 (M=1)	-	[1]
9-octadecenoic acid (z)-compd. with (z)-n-9-octadecenyl-1, 3-propanediamine	EC: 254-754-2 CAS: 40027-38-1	≥1 - ≤2	Skin Irrit. 2, H315 Eye Irrit. 2, H319 STOT RE 2, H373 (oral) Aquatic Acute 1, H400 (M=10) Aquatic Chronic 2, H411	-	[1]
solvent naphtha (petroleum), light arom.	REACH #: 01-2119455851-35 EC: 265-199-0 CAS: 64742-95-6	≤1	Flam. Liq. 3, H226 STOT SE 3, H335 STOT SE 3, H336 Asp. Tox. 1, H304 Aquatic Chronic 2, H411 See Section 16 for the full text of the H statements declared above.	P	[1] [2]

There are no additional ingredients present which, within the current knowledge of the supplier and in the concentrations applicable, are classified as hazardous to health or the environment and hence require reporting in this section.

Type

[1] Substance classified with a health or environmental hazard
[2] Substance with a workplace exposure limit, see section 8.
[3] Substance meets the criteria for PBT according to Regulation (EC) No. 1907/2006, Annex XIII
[4] Substance meets the criteria for vPvB according to Regulation (EC) No. 1907/2006, Annex XIII
[5] Substance of equivalent concern

SECTION 4: First aid measures

4.1 Description of first aid measures

General :	In all cases of doubt, or when symptoms persist, seek medical attention. Never give anything by mouth to an unconscious person. If breathing is irregular, drowsiness, loss of consciousness or cramps: Call 112 and give immediate treatment (first aid).
Eye contact :	Check for and remove any contact lenses. Immediately flush eyes with plenty of water for at least 15 minutes, occasionally lifting the upper and lower eyelids. Seek immediate medical attention.
Inhalation :	Remove to fresh air. Keep person warm and at rest. If not breathing, if breathing is irregular or if respiratory arrest occurs, provide artificial respiration or oxygen by trained personnel. Give nothing by mouth. If unconscious, place in recovery position and get medical attention immediately.
Skin contact :	Remove contaminated clothing and shoes. Wash skin thoroughly with soap and water or use recognized skin cleanser. Do NOT use solvents or thinners.
Ingestion :	If swallowed, seek medical advice immediately and show this container or label. Keep person warm and at rest. Do not induce vomiting unless directed to do so by medical personnel. Lower the head so that vomit will not re-enter the mouth and throat.
Protection of first-aiders :	No action shall be taken involving any personal risk or without suitable training. If it is suspected that fumes are still present, the rescuer should wear an appropriate mask or self-contained breathing apparatus. It may be dangerous to the person providing aid to give mouth-to-mouth resuscitation. Wash contaminated clothing thoroughly with water before removing it, or wear gloves.

4.2 Most important symptoms and effects, both acute and delayed

Potential acute health effects

Eye contact :	Causes serious eye damage.
Inhalation :	No known significant effects or critical hazards.
Skin contact :	Causes skin irritation. May cause an allergic skin reaction.
Ingestion :	No known significant effects or critical hazards.

Over-exposure signs/symptoms

Eye contact :	Adverse symptoms may include the following: pain watering redness
Inhalation :	No specific data.
Skin contact :	Adverse symptoms may include the following: pain or irritation redness blistering may occur
Ingestion :	Adverse symptoms may include the following: stomach pains

4.3 Indication of any immediate medical attention and special treatment needed

Notes to physician :	If gasses have been inhaled, from the decomposition of the product, symptoms may be delayed. Treat symptomatically. Contact poison treatment specialist immediately if large quantities have been ingested or inhaled.
Specific treatments :	No specific treatment.

SECTION 5: Firefighting measures

5.1 Extinguishing media

Extinguishing media :	Recommended: alcohol resistant foam, CO_2, powders, water spray. Not to be used: waterjet.

5.2 Special hazards arising from the substance or mixture

Hazards from the substance or mixture :	Flammable liquid and vapor. In a fire or if heated, a pressure increase will occur and the container may burst, with the risk of a subsequent explosion. Runoff to sewer may create fire or explosion hazard. This material is harmful to aquatic life with long lasting effects. Fire water contaminated with this material must be contained and prevented from being discharged to any waterway, sewer or drain.
Hazardous combustion products :	Decomposition products may include the following materials: carbon oxides nitrogen oxides

5.3 Advice for firefighters

SECTION 5: Firefighting measures

Promptly isolate the scene by removing all persons from the vicinity of the incident if there is a fire. No action shall be taken involving any personal risk or without suitable training. Fire will produce dense black smoke. Exposure to decomposition products may cause a health hazard. Cool closed containers exposed to fire with water. Do not release runoff from fire to drains or watercourses. Fire-fighters should wear appropriate protective equipment and self-contained breathing apparatus (SCBA) with a full face-piece operated in positive pressure mode. Clothing for fire-fighters (including helmets, protective boots and gloves) conforming to European standard EN 469 will provide a basic level of protection for chemical incidents.

SECTION 6: Accidental release measures

6.1 Personal precautions, protective equipment and emergency procedures

Avoid all direct contact with the spilled material. Exclude sources of ignition and be aware of explosion hazard. Ventilate the area. Avoid breathing vapor or mist. Refer to protective measures listed in sections 7 and 8. No action shall be taken involving any personal risk or without suitable training. If the product contaminates lakes, rivers, or sewers, inform the appropriate authorities in accordance with local regulations.

6.2 Environmental precautions

Avoid dispersal of spilled material and runoff and contact with soil, waterways, drains and sewers. Inform the relevant authorities if the product has caused environmental pollution (sewers, waterways, soil or air). Water polluting material.

6.3 Methods and materials for containment and cleaning up

Stop leak if without risk. Move containers from spill area. Approach release from upwind. Prevent entry into sewers, water courses, basements or confined areas. Wash spillages into an effluent treatment plant or proceed as follows. Contain and collect spillage with non-combustible, absorbent material e.g. sand, earth, vermiculite or diatomaceous earth and place in container for disposal according to local regulations (see Section 13). Use spark-proof tools and explosion-proof equipment. Contaminated absorbent material may pose the same hazard as the spilled product.

6.4 Reference to other sections

See Section 1 for emergency contact information.
See Section 8 for information on appropriate personal protective equipment.
See Section 13 for additional waste treatment information.

SECTION 7: Handling and storage

7.1 Precautions for safe handling

Vapors are heavier than air and may spread along floors. Vapors may form explosive mixtures with air. Prevent the creation of flammable or explosive concentrations of vapors in air and avoid vapor concentrations higher than the occupational exposure limits. In addition, the product should be used only in areas from which all naked lights and other sources of ignition have been excluded. Electrical equipment should be protected to the appropriate standard. To dissipate static electricity during transfer, ground drum and connect to receiving container with bonding strap. No sparking tools should be used.
Avoid inhalation of vapour, dust and spray mist. Avoid contact with skin and eyes. Eating, drinking and smoking should be prohibited in area where this material is handled, stored and processed. Appropriate personal protective equipment: see Section 8. Always keep in containers made from the same material as the original one.

7.2 Conditions for safe storage, including any incompatibilities

Store in accordance with local regulations. Store in a cool, well-ventilated area away from incompatible materials and ignition sources. Keep out of the reach of children. Keep away from: Oxidizing agents, strong alkalis, strong acids. No smoking. Prevent unauthorized access. Containers that are opened must be carefully resealed and kept upright to prevent leakage.

7.3 Specific end use(s)

See separate Product Data Sheet for recommendations or industrial sector specific solutions.

SECTION 8: Exposure controls/personal protection

8.1 Control parameters

Product/ingredient name	Exposure limit values
xylene	**EU OEL (Europe, 12/2009). Absorbed through skin.** STEL: 442 mg/m³ 15 minutes. STEL: 100 ppm 15 minutes. TWA: 221 mg/m³ 8 hours. TWA: 50 ppm 8 hours.
ethylbenzene	**EU OEL (Europe, 12/2009). Absorbed through skin.** STEL: 884 mg/m³ 15 minutes. STEL: 200 ppm 15 minutes. TWA: 442 mg/m³ 8 hours. TWA: 100 ppm 8 hours.

SECTION 8: Exposure controls/personal protection

solvent naphtha (petroleum), light arom.	**EU OEL (Europe).** TWA: 120 mg/m³ 8 hours. Form: TWA: 25 ppm 8 hours. Form:

Recommended monitoring procedures

If this product contains ingredients with exposure limits, personal, workplace atmosphere or biological monitoring may be required to determine the effectiveness of the ventilation or other control measures and/or the necessity to use respiratory protective equipment. Reference should be made to monitoring standards, such as the following: European Standard EN 689 (Workplace atmospheres - Guidance for the assessment of exposure by inhalation to chemical agents for comparison with limit values and measurement strategy) European Standard EN 14042 (Workplace atmospheres - Guide for the application and use of procedures for the assessment of exposure to chemical and biological agents) European Standard EN 482 (Workplace atmospheres - General requirements for the performance of procedures for the measurement of chemical agents) Reference to national guidance documents for methods for the determination of hazardous substances will also be required.

Derived effect levels

No DNELs/DMELs available.

Predicted effect concentrations

No PNECs available.

8.2 Exposure controls

Appropriate engineering controls

Arrange sufficient ventilation by local exhaust ventilation and good general ventilation to keep the airborne concentrations of vapors or dust lowest possible and below their respective threshold limit value. Ensure that eyewash stations and safety showers are proximal to the work-station location.

Individual protection measures

General : Gloves must be worn for all work that may result in soiling. Apron/coveralls/protective clothing must be worn when soiling is so great that regular work clothes do not adequately protect skin against contact with the product. Safety eyewear should be used when there is a likelihood of exposure.

Hygiene measures : Wash hands, forearms, and face thoroughly after handling compounds and before eating, smoking, using lavatory, and at the end of day.

Eye/face protection : Safety eyewear complying with an approved standard should be used when a risk assessment indicates this is necessary to avoid exposure to liquid splashes, mists, gases or dusts. If contact is possible, the following protection should be worn, unless the assessment indicates a higher degree of protection: chemical splash goggles and/or face shield. If inhalation hazards exist, a full-face respirator may be required instead.

Hand protection : Wear chemical-resistant gloves (tested to EN374) in combination with 'basic' employee training. The quality of the chemical-resistant protective gloves must be chosen as a function of the specific workplace concentrations and quantity of hazardous substances.

Since the actual work situation is unknown. Supplier of gloves should be contacted in order to find the appropriate type. Below listed glove(s) should be regarded as generic advice:

Recommended: Silver Shield / 4H gloves, polyvinyl alcohol (PVA), Viton®
May be used: nitrile rubber, neoprene rubber, butyl rubber
Short term exposure: natural rubber (latex), polyvinyl chloride (PVC)

Body protection : Personal protective equipment for the body should be selected based on the task being performed and the risks involved handling this product.
Wear suitable protective clothing. Always wear protective clothing when spraying.

Respiratory protection : Use a properly fitted, air-purifying or air-fed respirator complying with an approved standard if a risk assessment indicates this is necessary. Respirator selection must be based on known or anticipated exposure levels, the hazards of the product and the safe working limits of the selected respirator. If working areas have insufficient ventilation: When the product is applied by means that will not generate an aerosol such as, brush or roller wear half or totally covering mask equipped with gas filter of type A, when grinding use particle filter of type P. Be sure to use an approved/certified respirator or equivalent.

Environmental exposure controls

Emissions from ventilation or work process equipment should be checked to ensure they comply with the requirements of environmental protection legislation. In some cases, fume scrubbers, filters or engineering modifications to the process equipment will be necessary to reduce emissions to acceptable levels.

SECTION 9: Physical and chemical properties

9.1 Information on basic physical and chemical properties

Physical state :	Liquid.
Color :	Clear.
Odor :	Solvent-like
pH :	Testing not relevant or not possible due to nature of the product.
Melting point/freezing point :	Testing not relevant or not possible due to nature of the product.
Boiling point/boiling range :	Testing not relevant or not possible due to nature of the product.
Flash point :	Closed cup: 26°C (78.8°F)
Evaporation rate :	Testing not relevant or not possible due to nature of the product.
Flammability :	Highly flammable in the presence of the following materials or conditions: open flames, sparks and static discharge and heat.
Lower and upper explosive (flammable) limits :	0.8 - 11.3 vol %
Vapor pressure :	Testing not relevant or not possible due to nature of the product.
Vapor density :	Testing not relevant or not possible due to nature of the product.
Relative density :	0.949 g/cm³
Solubility(ies) :	Partially soluble in the following materials: cold water and hot water.
Partition coefficient (LogKow) :	Testing not relevant or not possible due to nature of the product.
Auto-ignition temperature :	Lowest known value: 355°C (671°F) (n-butanol).
Decomposition temperature :	Testing not relevant or not possible due to nature of the product.
Viscosity :	Aspiration hazard (H304) Not classified. Testing not relevant due to nature of the product.
Explosive properties :	Highly explosive in the presence of the following materials or conditions: heat. Explosive in the presence of the following materials or conditions: open flames, sparks and static discharge.
Oxidizing properties :	Testing not relevant or not possible due to nature of the product.

9.2 Other information

Solvent(s) % by weight :	Weighted average: 36 %
Water % by weight :	Weighted average: 0 %
VOC content :	344.2 g/l
TOC Content :	Weighted average: 270 g/l
Solvent Gas :	Weighted average: 0.093 m³/l

SECTION 10: Stability and reactivity

10.1 Reactivity

No specific test data related to reactivity available for this product or its ingredients.

10.2 Chemical stability

The product is stable.

10.3 Possibility of hazardous reactions

Under normal conditions of storage and use, hazardous reactions will not occur.

10.4 Conditions to avoid

Avoid all possible sources of ignition (spark or flame). Do not pressurize, cut, weld, braze, solder, drill, grind or expose containers to heat or sources of ignition.

10.5 Incompatible materials

Highly reactive or incompatible with the following materials: oxidizing materials.
Reactive or incompatible with the following materials: reducing materials.

10.6 Hazardous decomposition products

When exposed to high temperatures (i.e. in case of fire) harmful decomposition products may be formed:

SECTION 10: Stability and reactivity

Decomposition products may include the following materials: carbon oxides nitrogen oxides

SECTION 11: Toxicological information

11.1 Information on toxicological effects

Exposure to component solvent vapor concentrations may result in adverse health effects such as mucous membrane and respiratory system irritation and adverse effects on the kidneys, liver and central nervous system. Solvents may cause some of the above effects by absorption through the skin. Symptoms and signs include headaches, dizziness, fatigue, muscular weakness, drowsiness and, in extreme cases, loss of consciousness. Repeated or prolonged contact with the preparation may cause removal of natural fat from the skin, resulting in non-allergic contact dermatitis and absorption through the skin. If splashed in the eyes, the liquid may cause irritation and reversible damage. Accidental swallowing may cause stomach pain. Chemical lung inflammation may occur if the product is taken into the lungs via vomiting.
Direct contact with the eyes can cause irreversible damage, including blindness.

Acute toxicity

Product/ingredient name	Result	Species	Dose	Exposure
Methylstyrenated phenol	LC50 Inhalation Dusts and mists	Rat	>5 mg/l	4 hours
	LD50 Dermal	Rat	>2000 mg/kg	-
n-butanol	LC50 Inhalation Vapor	Rat	24000 mg/m³	4 hours
	LD50 Dermal	Rabbit	3400 mg/kg	-
	LD50 Oral	Rat	790 mg/kg	-
xylene	LC50 Inhalation Gas.	Rat	5000 ppm	4 hours
	LC50 Inhalation Vapor	Rat	6350 ppm	4 hours
	LD50 Oral	Rat	4300 mg/kg	-
ethylbenzene	LD50 Dermal	Rabbit	>5000 mg/kg	-
	LD50 Oral	Rat	3500 mg/kg	-
2,4,6-tris(dimethylaminomethyl) phenol	LD50 Dermal	Rat	1280 mg/kg	-
	LD50 Oral	Rat	1200 mg/kg	-
	LD50 Oral	Rat	2169 mg/kg	-
solvent naphtha (petroleum), light arom.	LC50 Inhalation Vapor	Rat	6193 mg/m³	4 hours
	LD50 Dermal	Rabbit	3160 mg/kg	-
	LD50 Oral	Rat	3492 mg/kg	-

Acute toxicity estimates

Route	ATE value
Oral	3988.3 mg/kg
Dermal	7700.3 mg/kg
Inhalation (gases)	28138.5 ppm
Inhalation (vapors)	63.14 mg/l

Irritation/Corrosion

Product/ingredient name	Result	Species	Score	Exposure
Methylstyrenated phenol	Eyes - Mild irritant	Rabbit	-	-
n-butanol	Eyes - Severe irritant	Rabbit	-	24 hours 2 milligrams
	Skin - Moderate irritant	Rabbit	-	24 hours 20 milligrams
xylene	Eyes - Severe irritant	Rabbit	-	24 hours 5 milligrams
	Skin - Moderate irritant	Rabbit	-	24 hours 500 milligrams
ethylbenzene	Skin - Mild irritant	Rabbit	-	24 hours 15 milligrams
	Respiratory - Mild irritant	Rabbit	-	-
	Eyes - Mild irritant	Rabbit	-	-
2,4,6-tris(dimethylaminomethyl) phenol	Eyes - Severe irritant	Rabbit	-	24 hours 50 Micrograms
	Skin - Severe irritant	Rabbit	-	24 hours 2 milligrams
solvent naphtha (petroleum), light arom.	Eyes - Mild irritant	Rabbit	-	24 hours 100 microliters
	Respiratory - Mild irritant	Rabbit	-	-

Mutagenic effects

No known significant effects or critical hazards.

Carcinogenicity

No known significant effects or critical hazards.

Reproductive toxicity

No known significant effects or critical hazards.

Teratogenic effects

No known significant effects or critical hazards.

SECTION 11: Toxicological information

Specific target organ toxicity (single exposure)

Product/ingredient name	Category	Route of exposure	Target organs
n-butanol	Category 3	Not applicable.	Respiratory tract irritation and Narcotic effects
solvent naphtha (petroleum), light arom.	Category 3	Not applicable.	Respiratory tract irritation and Narcotic effects

Specific target organ toxicity (repeated exposure)

Product/ingredient name	Category	Route of exposure	Target organs
ethylbenzene	Category 2	Not determined	hearing organs
9-octadecenoic acid (z)-compd. with (z)-n-9-octadecenyl-1,3-propanediamine	Category 2	Oral	Not determined

Aspiration hazard

Product/ingredient name	Result
ethylbenzene	ASPIRATION HAZARD - Category 1
solvent naphtha (petroleum), light arom.	ASPIRATION HAZARD - Category 1

Information on the likely routes of exposure

Routes of entry anticipated: Oral, Dermal, Inhalation.

Potential chronic health effects

Sensitization : Contains Methylstyrenated phenol, triethylenetetramine. May produce an allergic reaction.

Other information : No additional known significant effects or critical hazards.

SECTION 12: Ecological information

12.1 Toxicity

Do not allow to enter drains or watercourses. Harmful to aquatic life with long lasting effects.

Product/ingredient name	Result	Species	Exposure
Methylstyrenated phenol	Acute EC50 15 mg/l	Algae	72 hours
	Acute EC50 14 - 51 mg/l	Daphnia	48 hours
	Acute EC50 25.8 mg/l	Fish	96 hours
n-butanol	Acute EC50 1328 mg/l	Daphnia	96 hours
	Acute LC50 1.376 mg/l	Fish	96 hours
ethylbenzene	Chronic NOEC <1000 µg/l Fresh water	Algae - Pseudokirchneriella subcapitata	96 hours
2,4,6-tris(dimethylaminomethyl) phenol	Acute EC50 84 mg/l	Algae	72 hours
	Acute LC50 175 mg/l	Fish	96 hours
solvent naphtha (petroleum), light arom.	Acute EC50 2.6 mg/l	Algae - Pseudokirchneriella subcapitata (green algae)	96 hours
	Acute EC50 6.14 mg/l	Daphnia - Daphnia magna	48 hours
	Acute LC50 9.22 mg/l	Fish - Oncorhynchus mykiss (rainbow trout)	96 hours

12.2 Persistence and degradability

Product/ingredient name	Test	Result	Dose	Inoculum
n-butanol	OECD 301D Ready Biodegradability - Closed Bottle Test	92 % - 20 days	-	-
xylene	-	>60 % - Readily - 28 days	-	-
ethylbenzene	-	>70 % - Readily - 28 days	-	-
2,4,6-tris(dimethylaminomethyl) phenol	OECD 301D 301D Ready Biodegradability - Closed Bottle Test	4 % - Not readily - 28 days	-	-
solvent naphtha (petroleum), light arom.	-	>70 % - Readily - 28 days	-	-

Product/ingredient name	Aquatic half-life	Photolysis	Biodegradability
n-butanol	-	-	Readily
xylene	-	-	Readily
ethylbenzene	-	-	Readily
2,4,6-tris(dimethylaminomethyl) phenol	-	-	Not readily
solvent naphtha (petroleum), light arom.	-	-	Readily

SECTION 12: Ecological information

12.3 Bioaccumulative potential

Product/ingredient name	$LogP_{ow}$	BCF	Potential
Methylstyrenated phenol	3.627	-	low
n-butanol	1	3.16	low
xylene	3.12	8.1 - 25.9	low
ethylbenzene	3.6	-	low
2,4,6-tris(dimethylaminomethyl)phenol	0.219	-	low
solvent naphtha (petroleum), light arom.	-	10 - 2500	high

12.4 Mobility in soil

Soil/water partition coefficient (K_{OC}) : No known data avaliable in our database.

Mobility : No known data avaliable in our database.

12.5 Results of PBT and vPvB assessment

PBT : Not applicable.

vPvB : Not applicable.

12.6 Other adverse effects

No known significant effects or critical hazards.

SECTION 13: Disposal considerations

13.1 Waste treatment methods

The generation of waste should be avoided or minimized wherever possible. Residues of the product is listed as hazardous waste. Dispose of according to all state and local applicable regulations. Waste should not be disposed of untreated to the sewer unless fully compliant with the requirements of all authorities with jurisdiction. Spillage, remains, discarded clothes and similar should be discarded in a fireproof container.

European waste catalogue no. (EWC) is given below.

European waste catalogue (EWC) : 08 01 11*

Packaging

The generation of waste should be avoided or minimized wherever possible. Waste packaging should be recycled. Incineration or landfill should only be considered when recycling is not feasible.

SECTION 14: Transport information

Transport may take place according to national regulation or ADR for transport by road, RID for transport by train, IMDG for transport by sea, IATA for transport by air.

	14.1 UN no.	14.2 Proper shipping name	14.3 Transport hazard class(es)	14.4 PG*	14.5 Env*	Additional information
ADR/RID Class	UN1263	PAINT	3	III	No.	**Special provisions** 640 (E) **Tunnel code** (D/E)
IMDG Class	UN1263	PAINT	3	III	No.	**Emergency schedules (EmS)** F-E,S-E
IATA Class	UN1263	PAINT	3	III	No.	-

PG* : Packing group
Env.* : Environmental hazards

14.6 Special precautions for user

Transport within user's premises: always transport in closed containers that are upright and secure. Ensure that persons transporting the product know what to do in the event of an accident or spillage.

14.7 Transport in bulk according to Annex II of MARPOL and the IBC Code

SECTION 14: Transport information

Not applicable.

SECTION 15: Regulatory information

15.1 Safety, health and environmental regulations/legislation specific for the substance or mixture

EU Regulation (EC) No. 1907/2006 (REACH) Annex XIV - List of substances subject to authorization - Substances of very high concern

Annex XIV

None of the components are listed.

Substances of very high concern

None of the components are listed.

Annex XVII - Restrictions on the manufacture, placing on the market and use of certain dangerous substances, mixtures and articles

Not applicable.

Other EU regulations

Seveso category This product is controlled under the Seveso III Directive.

Seveso category
P5c: Flammable liquids 2 and 3 not falling under P5a or P5b C6: Flammable (R10)

15.2 Chemical Safety Assessment

This product contains substances for which Chemical Safety Assessments are still required.

SECTION 16: Other information

Abbreviations and acronyms :

ATE = Acute Toxicity Estimate
CLP = Classification, Labelling and Packaging Regulation [Regulation (EC) No. 1272/2008]
EUH statement = CLP-specific Hazard statement
RRN = REACH Registration Number
DNEL = Derived No Effect Level
PNEC = Predicted No Effect Concentration

Full text of abbreviated H statements :

H225	Highly flammable liquid and vapor.
H226	Flammable liquid and vapor.
H302	Harmful if swallowed.
H304	May be fatal if swallowed and enters airways.
H312	Harmful in contact with skin.
H314	Causes severe skin burns and eye damage.
H315	Causes skin irritation.
H317	May cause an allergic skin reaction.
H318	Causes serious eye damage.
H319	Causes serious eye irritation.
H332	Harmful if inhaled.
H335	May cause respiratory irritation.
H336	May cause drowsiness or dizziness.
H373 (hearing organs)	May cause damage to organs through prolonged or repeated exposure. (hearing organs)
H373 (oral)	May cause damage to organs through prolonged or repeated exposure if swallowed.
H400	Very toxic to aquatic life.
H411	Toxic to aquatic life with long lasting effects.
H412	Harmful to aquatic life with long lasting effects.

Full text of classifications [CLP/GHS] :

Acute Tox. 4, H302	ACUTE TOXICITY (oral) - Category 4
Acute Tox. 4, H312	ACUTE TOXICITY (dermal) - Category 4
Acute Tox. 4, H332	ACUTE TOXICITY (inhalation) - Category 4
Aquatic Acute 1, H400	AQUATIC HAZARD (ACUTE) - Category 1
Aquatic Chronic 2, H411	AQUATIC HAZARD (LONG-TERM) - Category 2
Aquatic Chronic 3, H412	AQUATIC HAZARD (LONG-TERM) - Category 3
Asp. Tox. 1, H304	ASPIRATION HAZARD - Category 1
Eye Dam. 1, H318	SERIOUS EYE DAMAGE/ EYE IRRITATION - Category 1
Eye Irrit. 2, H319	SERIOUS EYE DAMAGE/ EYE IRRITATION - Category 2
Flam. Liq. 2, H225	FLAMMABLE LIQUIDS - Category 2
Flam. Liq. 3, H226	FLAMMABLE LIQUIDS - Category 3
Skin Corr. 1B, H314	SKIN CORROSION/IRRITATION - Category 1B
Skin Irrit. 2, H315	SKIN CORROSION/IRRITATION - Category 2
Skin Sens. 1, H317	SKIN SENSITIZATION - Category 1
STOT RE 2, H373 (hearing organs)	SPECIFIC TARGET ORGAN TOXICITY (REPEATED EXPOSURE) (hearing organs) - Category 2

SECTION 16: Other information

STOT RE 2, H373 (oral)	SPECIFIC TARGET ORGAN TOXICITY (REPEATED EXPOSURE) (oral) - Category 2
STOT SE 3, H335	SPECIFIC TARGET ORGAN TOXICITY (SINGLE EXPOSURE) (Respiratory tract irritation) - Category 3
STOT SE 3, H336	SPECIFIC TARGET ORGAN TOXICITY (SINGLE EXPOSURE) (Narcotic effects) - Category 3

Procedure used to derive the classification according to Regulation (EC) No. 1272/2008 [CLP/GHS]

Classification	Justification
FLAMMABLE LIQUIDS - Category 3	On basis of test data
SKIN CORROSION/IRRITATION - Category 2	Calculation method
SERIOUS EYE DAMAGE/ EYE IRRITATION - Category 1	Calculation method
SKIN SENSITIZATION - Category 1	Calculation method
AQUATIC HAZARD (LONG-TERM) - Category 3	Calculation method

Notice to reader

Indicates information that has changed from previously issued version.

The information contained in this safety data sheet is based on the present state of knowledge and EU and national legislation. It provides guidance on health, safety and environmental aspects for handling the product in a safe way and should not be construed as any guarantee of the technical preformance or suitability for particular applications.
It is always the duty of the user/employer to ascertain that the work is planned and carried out in accordance with the national regulations.

MATERIAL SAFETY DATA SHEET

SECTION I

Date of Preparation: December, 2000 Rev May, 2004

PRODUCT NAME: Flex-Guard 250
PRODUCT CLASS: Epoxy Resin, Part A
PRODUCT TYPE: Bisphenol F/Epichlorohydrin Resin

D.O.T. CATEGORY: Chemical, NOIBN

MANUFACTURER: Environmental Coatings
4702 E. Virginia Street.
Mesa, Arizona 85215

TELEPHONE: 1-480-984-7608
EMERGENCY: 1-800/535-5053 INFOTRAC

SECTION II - INGREDIENTS

100% Bisphenol F/Epichlorohydrin Epoxy Resin CAS NO. 28064-14-4

SECTION III - HEALTH INFORMATION

The health effects noted below are consistent with requirements under the OSHA hazard Communication Standard (29CFR 1910.1200).

EYE CONTACT: Product may be moderately irritating to the eyes.
SKIN CONTACT: Product may be moderately irritating to the skin and may cause skin sensitization.
INHALATION: Not expected to be a relevant route of exposure. However, high vapor or aerosol mist concentrations may be irritating tot he nose, throat and upper respiratory tract.
INGESTION: Not expected to be a relevant route of exposure. However, product is predicted to have a low order of acute oral toxicity.
SIGNS AND SYMPTOMS: Irritation as noted. Skin sensitization (allergy) may be evidenced by rash, especially hives.
AGGRAVATED MEDICAL CONDITIONS: Preexisting skin, eye and respiratory disorders may be aggravated by exposure to the product.

SECTION IV – OCCUPATIONAL EXPOSURE LIMITS

No OSHA or ACGIH limits have been established for this product.

SECTION V - EMERGENCY AND FIRST AID PROCEDURES

EYE CONTACT:
Flush eyes with plenty of water for 15 minutes while holding eyelids open. Get medical attention.
SKIN CONTACT:
Remove contaminated clothing/shoes and wipe excess from skin. Flush skin with water. Follow by washing with soap and water. If irritation occurs, get medical attention. Do not reuse clothing until cleaned. Contaminated leather articles, including shoes, cannot be decontaminated and should be destroyed to prevent use.
INHALATION:
Remove victim to fresh air and provide oxygen if breathing is difficult. Give artificial respiration if not breathing. Get medical attention.
INGESTION:
Do not induce vomiting. In general, no treatment is necessary unless large quantities of product are ingested. However, get medical advice.
NOTE TO PHYSICIAN:
In general, emesis induction is unnecessary in high viscosity, low volatility products, e.g. neat epoxy resins.

SECTION VI – SUPPLEMENTAL HEALTH INFORMATION

Epichlorohydrin, an impurity in this product (<50 ppm), has been reported to product cancer in laboratory animals and to product mutagenic changes in bacteria and cultured human cells. It has been established by the International Agency for Research on Cancer (IARC) as a probable human carcinogen (IARC Grout 2A) based on the following conclusions: Human evidence – inadequate; animal evidence – sufficient. It has been classified as an anticipated human carcinogen by the National Toxicology Program (NTP).

SECTION VII – PHYSICAL DATA

BOILING POINT: N/A
SPECIFIC GRAVITY: 1.2
VAPOR PRESSURE: N/A
MELTING POINT: N/A
SOLUBILITY IN WATER: Negligible
APPEARANCE AND ODOR: Light yellow, Viscous liquid.
EVAPORATION RATE: N/A

SECTION VIII – FIRE AND EXPLOSION HAZARDS

FLASH POINT: >200° F. (Pensky Martin Closed Cup)
EXTINGUISHING MEDIA: Use water fog, alcohol foam, dry chemical or CO_2.
SPECIAL FIRE FIGHTING PROCEDURES: Material will not burn unless preheated. Do not enter confined fire space without full bunker gear (helmet with face shield, bunker coats, gloves and rubber boots), including a positive pressure NIOSH approved self-contained breathing apparatus. Cool fire exposed containers with water.
UNUSUAL FIRE AND EXPLOSION HAZARDS: None

SECTION IX - REACTIVITY DATA

STABILITY: Stable
HAZARDOUS POLYMERIZATION: Will not occur.
CONDITIONS AND MATERIALS TO AVOID: Can react vigorously with strong oxidizing agents, strong Lewis or mineral acids, and strong mineral and organic bases/especially primary and secondary aliphatic amines.

HAZARDOUS DECOMPOSITION PRODUCTS: Carbon monoxide, aldehydes, acids, and other organic substances may be formed during thermal and oxidative decomposition. Reaction with some curing agents may produce considerable heat. Run-a-way cure reactions may char and decompose the resin system, generating unidentified fumes and vapors, which may be toxic.

SECTION X - EMPLOYEE PROTECTION

RESPIRATORY PROTECTION: Not ordinarily required.
PROTECTIVE CLOTHING: Avoid contact with eyes. Wear safety glasses or goggles as appropriate. Avoid prolonged or repeated contact with skin. Wear chemical-resistant gloves and other clothing as required to minimize contact.
ADDITIONAL PROTECTIVE MEASURES: None.

SECTION XI – ENVIRONMENTAL PROCEDURES

SPILL OR LEAK PROCEDURES:
May burn although not readily ignitable. Use cautious judgement with cleaning up large spills. LARGE SPILLS - Wear respirator and protective clothing as appropriate. Shut off source of leak, if safe to do so. Dike and contain. Remove with vacuum trucks or pump to storage/salvage vessels. Soak up residue with an absorbent such as clay, sand or other suitable material; dispose of properly. Flush area with water to remove trace residue.

SMALL SPILLS - Take up with an absorbent material and dispose of properly.

MATERIAL SAFETY DATA SHEET

SECTION XII – SPECIAL PRECAUTIONS

Store in cool, dry place. Keep away from open flames and high temperatures. Containers, even those that have been emptied, may contain hazardous residues. Handle in accordance with the hazard potential of curing agents used. Avoid contact with eyes. Avoid prolonged or repeated contact with skin. Wash thoroughly after handling. Launder contaminated clothing before reusing. Contaminated leather articles, including shoes, cannot be decontaminated and should be destroyed to prevent reuse.
Warning! May cause skin and eye irritation. May cause skin sensitization. Minimize bodily contact. Wash with soap and water before eating, drinking, smoking, applying cosmetics, or using toilet facilities.
Heating this resin above 300 deg. F. in the presence of air may cause slow oxidative decomposition; above 500 deg. F., polymerization may occur. Some curing agents, e.g., aliphatic polyamines can product exothermic reactions which in large masses can cause runaway polymerization and charring of the reactants. Fumes and vapors from these thermal and chemical decompositions vary widely in composition and toxicity. Do not breathe fumes. Use a NIOSH-approved respirator as required to prevent over exposure. In accord with 29 CFR 1910.134, use either an atmosphere-supplying respirator or an air-purifying respirator for organic vapors.

SECTION XIII - TRANSPORTATION INFORMATION

Department of Transportation Classification: Not Hazardous by D.O.T. Regulations
D.O.T. Proper Shipping Name: None

SECTION XIV - OTHER REGULATORY CONTROLS

This product is listed on the EPA/TSCA inventory of chemical substances.
Protection of Stratospheric Ozone (Pursuant to Section 611 of the clean air act amendments of 1990): Per 40 CFR Part 82. This product does not contain nor was it directly manufactured with any Class I or Class II ozone-depleting substances.

SECTION XV - STATE REGULATORY INFORMATION

The following chemicals are specifically listed by individual states; other product specific health and safety data in other sections of the MSDS may also be applicable for State requirements. For details on your regulatory requirements you should contact the appropriate agency in your state.

STATE LISTED COMPONENT	CAS No.	Percent	State Code
Epichlorohydrin	106-89-8	<50 ppm	MA, PA, RI ,CA65C/R

MATERIAL SAFETY DATA SHEET

CA = California Hazardous Substance List; CA65C, CA65R = California Safe Drinking Water and Toxics Enforcement Act of 1986 or Proposition 65 List; MA = Massachusetts Subs. List, PA = Pennsylvania Haz. Subst. List, RI = Rhode Island Haz. Subst. List.
PROPOSITION 65 Footnote: CA65C – The chemical identified with this code is known to the State of California to cause birth defects or other reproductive harm. CA65C/R – The chemical identified with this code is known to the State of California to cause both cancer and birth defects or other reproductive harm.

THE INFORMATION HEREIN RELATES TO THE PRODUCT NAMED AND IS BASED UPON INFORMATION CONSIDERED TO BE ACCURATE. NO WARRANTY EXPRESSED OR IMPLIED IS INTENDED.

MATERIAL SAFETY DATA SHEET

No information on this page.

SAFETY DATA SHEET

Version 3.7
Revision Date 03/03/2015
Print Date 07/29/2015

1. PRODUCT AND COMPANY IDENTIFICATION

1.1 Product identifiers

Product name	:	Poly(Bisphenol A-*co*-epichlorohydrin)
Product Number	:	181196
Brand	:	Aldrich
CAS-No.	:	25068-38-6

1.2 Relevant identified uses of the substance or mixture and uses advised against

Identified uses	:	Laboratory chemicals, Manufacture of substances

1.3 Details of the supplier of the safety data sheet

Company	:	Sigma-Aldrich 3050 Spruce Street SAINT LOUIS MO 63103 USA
Telephone	:	+1 800-325-5832
Fax	:	+1 800-325-5052

1.4 Emergency telephone number

Emergency Phone #	:	(314) 776-6555

2. HAZARDS IDENTIFICATION

2.1 Classification of the substance or mixture

GHS Classification in accordance with 29 CFR 1910 (OSHA HCS)
Acute toxicity, Oral (Category 4), H302
Skin corrosion (Category 1B), H314
Serious eye damage (Category 1), H318
Skin sensitisation (Category 1), H317
Carcinogenicity (Category 1B), H350
Acute aquatic toxicity (Category 2), H401
Chronic aquatic toxicity (Category 2), H411

For the full text of the H-Statements mentioned in this Section, see Section 16.

2.2 GHS Label elements, including precautionary statements

Pictogram

Signal word: Danger

Hazard statement(s)

H302	Harmful if swallowed.
H314	Causes severe skin burns and eye damage.
H317	May cause an allergic skin reaction.
H318	Causes serious eye damage.
H350	May cause cancer.
H411	Toxic to aquatic life with long lasting effects.

Precautionary statement(s)

P201	Obtain special instructions before use.

P202	Do not handle until all safety precautions have been read and understood.
P260	Do not breathe dust or mist.
P264	Wash skin thoroughly after handling.
P270	Do not eat, drink or smoke when using this product.
P272	Contaminated work clothing should not be allowed out of the workplace.
P273	Avoid release to the environment.
P280	Wear protective gloves/ protective clothing/ eye protection/ face protection.
P281	Use personal protective equipment as required.
P301 + P312 + P330	IF SWALLOWED: Call a POISON CENTER or doctor/ physician if you feel unwell. Rinse mouth.
P301 + P330 + P331	IF SWALLOWED: Rinse mouth. Do NOT induce vomiting.
P303 + P361 + P353	IF ON SKIN (or hair): Remove/ Take off immediately all contaminated clothing. Rinse skin with water/ shower.
P304 + P340 + P310	IF INHALED: Remove victim to fresh air and keep at rest in a position comfortable for breathing. Immediately call a POISON CENTER or doctor/ physician.
P305 + P351 + P338 + P310	IF IN EYES: Rinse cautiously with water for several minutes. Remove contact lenses, if present and easy to do. Continue rinsing. Immediately call a POISON CENTER or doctor/ physician.
P308 + P313	IF exposed or concerned: Get medical advice/ attention.
P333 + P313	If skin irritation or rash occurs: Get medical advice/ attention.
P363	Wash contaminated clothing before reuse.
P391	Collect spillage.
P405	Store locked up.
P501	Dispose of contents/ container to an approved waste disposal plant.

2.3 Hazards not otherwise classified (HNOC) or not covered by GHS - none

3. COMPOSITION/INFORMATION ON INGREDIENTS

3.2 Mixtures

Formula : (C15 H16 O2 . C3 H5 Cl O)x

Hazardous components

Component		Classification	Concentration
Reaction product: bisphenol-A-(epichlorhydrin) and epoxy resin (number average molecular weight <= 700)			
CAS-No. EC-No. Index-No.	25068-38-6 500-033-5 603-074-00-8	Skin Irrit. 2; Eye Irrit. 2A; Skin Sens. 1; Aquatic Acute 2; Aquatic Chronic 2; H315, H317, H319, H411	<= 100 %
Epichlorhydrin			
CAS-No. EC-No. Index-No. Registration number	106-89-8 203-439-8 603-026-00-6 01-2119457436-33-XXXX	Flam. Liq. 3; Acute Tox. 3; Skin Corr. 1B; Eye Dam. 1; Skin Sens. 1; Carc. 1B; Aquatic Acute 3; H226, H301 + H311 + H331, H314, H317, H318, H350, H402	>= 5 - < 10 %

For the full text of the H-Statements mentioned in this Section, see Section 16.

4. FIRST AID MEASURES

4.1 Description of first aid measures

General advice

Consult a physician. Show this safety data sheet to the doctor in attendance.Move out of dangerous area.

If inhaled

If breathed in, move person into fresh air. If not breathing, give artificial respiration. Consult a physician.

In case of skin contact
Take off contaminated clothing and shoes immediately. Wash off with soap and plenty of water. Consult a physician.

In case of eye contact
Rinse thoroughly with plenty of water for at least 15 minutes and consult a physician.Continue rinsing eyes during transport to hospital.

If swallowed
Do NOT induce vomiting. Never give anything by mouth to an unconscious person. Rinse mouth with water. Consult a physician.

4.2 Most important symptoms and effects, both acute and delayed
The most important known symptoms and effects are described in the labelling (see section 2.2) and/or in section 11

4.3 Indication of any immediate medical attention and special treatment needed
No data available

5. FIREFIGHTING MEASURES

5.1 Extinguishing media

Suitable extinguishing media
Use water spray, alcohol-resistant foam, dry chemical or carbon dioxide.

5.2 Special hazards arising from the substance or mixture
No data available

5.3 Advice for firefighters
Wear self-contained breathing apparatus for firefighting if necessary.

5.4 Further information
No data available

6. ACCIDENTAL RELEASE MEASURES

6.1 Personal precautions, protective equipment and emergency procedures
Use personal protective equipment. Avoid dust formation. Avoid breathing vapours, mist or gas. Ensure adequate ventilation. Evacuate personnel to safe areas. Avoid breathing dust.
For personal protection see section 8.

6.2 Environmental precautions
Prevent further leakage or spillage if safe to do so. Do not let product enter drains. Discharge into the environment must be avoided.

6.3 Methods and materials for containment and cleaning up
Pick up and arrange disposal without creating dust. Sweep up and shovel. Keep in suitable, closed containers for disposal.

6.4 Reference to other sections
For disposal see section 13.

7. HANDLING AND STORAGE

7.1 Precautions for safe handling
Avoid contact with skin and eyes. Avoid formation of dust and aerosols.Further processing of solid materials may result in the formation of combustible dusts. The potential for combustible dust formation should be taken into consideration before additional processing occurs.
Provide appropriate exhaust ventilation at places where dust is formed.
For precautions see section 2.2.

7.2 Conditions for safe storage, including any incompatibilities
Keep container tightly closed in a dry and well-ventilated place.
Storage class (TRGS 510): Non-combustible, acute toxic Cat.3 / toxic hazardous materials or hazardous materials causing chronic effects

7.3 Specific end use(s)
Apart from the uses mentioned in section 1.2 no other specific uses are stipulated

8. EXPOSURE CONTROLS/PERSONAL PROTECTION

8.1 Control parameters

Components with workplace control parameters

Component	CAS-No.	Value	Control parameters	Basis
Epichlorhydrin	106-89-8	TWA	0.500000 ppm	USA. ACGIH Threshold Limit Values (TLV)
	Remarks	Upper Respiratory Tract irritation Male reproductive Confirmed animal carcinogen with unknown relevance to humans Danger of cutaneous absorption		
		Potential Occupational Carcinogen See Appendix A		
		TWA	5.000000 ppm 19.000000 mg/m3	USA. Occupational Exposure Limits (OSHA) - Table Z-1 Limits for Air Contaminants
		Skin designation The value in mg/m3 is approximate.		

8.2 Exposure controls

Appropriate engineering controls
Handle in accordance with good industrial hygiene and safety practice. Wash hands before breaks and at the end of workday.

Personal protective equipment

Eye/face protection
Face shield and safety glasses Use equipment for eye protection tested and approved under appropriate government standards such as NIOSH (US) or EN 166(EU).

Skin protection
Handle with gloves. Gloves must be inspected prior to use. Use proper glove removal technique (without touching glove's outer surface) to avoid skin contact with this product. Dispose of contaminated gloves after use in accordance with applicable laws and good laboratory practices. Wash and dry hands.

Body Protection
Complete suit protecting against chemicals, The type of protective equipment must be selected according to the concentration and amount of the dangerous substance at the specific workplace.

Respiratory protection
Where risk assessment shows air-purifying respirators are appropriate use a full-face particle respirator type N100 (US) or type P3 (EN 143) respirator cartridges as a backup to engineering controls. If the respirator is the sole means of protection, use a full-face supplied air respirator. Use respirators and components tested and approved under appropriate government standards such as NIOSH (US) or CEN (EU).

Control of environmental exposure
Prevent further leakage or spillage if safe to do so. Do not let product enter drains. Discharge into the environment must be avoided.

9. PHYSICAL AND CHEMICAL PROPERTIES

9.1 Information on basic physical and chemical properties

a)	Appearance	Form: pellets
b)	Odour	No data available
c)	Odour Threshold	No data available
d)	pH	No data available
e)	Melting point/freezing point	No data available
f)	Initial boiling point and	No data available

	boiling range	
g)	Flash point	No data available
h)	Evaporation rate	No data available
i)	Flammability (solid, gas)	No data available
j)	Upper/lower flammability or explosive limits	No data available
k)	Vapour pressure	No data available
l)	Vapour density	No data available
m)	Relative density	1.18 g/mL at 25 °C (77 °F)
n)	Water solubility	No data available
o)	Partition coefficient: n-octanol/water	No data available
p)	Auto-ignition temperature	No data available
q)	Decomposition temperature	No data available
r)	Viscosity	No data available
s)	Explosive properties	No data available
t)	Oxidizing properties	No data available

9.2 Other safety information
No data available

10. STABILITY AND REACTIVITY

10.1 Reactivity
No data available

10.2 Chemical stability
Stable under recommended storage conditions.

10.3 Possibility of hazardous reactions
No data available

10.4 Conditions to avoid
No data available

10.5 Incompatible materials
No data available

10.6 Hazardous decomposition products
Other decomposition products - No data available
In the event of fire: see section 5

11. TOXICOLOGICAL INFORMATION

11.1 Information on toxicological effects

Acute toxicity
LD50 Oral - Rat - 13,600 mg/kg
Remarks: Behavioral:Somnolence (general depressed activity). Lungs, Thorax, or Respiration:Dyspnea. Nutritional and Gross Metabolic:Weight loss or decreased weight gain.

Inhalation: No data available

Dermal: No data available

Skin corrosion/irritation
No data available

Serious eye damage/eye irritation
No data available

Respiratory or skin sensitisation
Germ cell mutagenicity
No data available

Ames test
Result: positive

Carcinogenicity

IARC:	2A - Group 2A: Probably carcinogenic to humans (Epichlorhydrin)
NTP:	Reasonably anticipated to be a human carcinogen (Epichlorhydrin)
OSHA:	No component of this product present at levels greater than or equal to 0.1% is identified as a carcinogen or potential carcinogen by OSHA.

Reproductive toxicity
No data available

No data available

Specific target organ toxicity - single exposure
No data available

Specific target organ toxicity - repeated exposure
No data available

Aspiration hazard
No data available

Additional Information
RTECS: Not available

Stomach - Irregularities - Based on Human Evidence
Stomach - Irregularities - Based on Human Evidence (Epichlorhydrin)

12. ECOLOGICAL INFORMATION

12.1 Toxicity
No data available

12.2 Persistence and degradability

Biodegradability	Result: - According to the results of tests of biodegradability this product is not readily biodegradable. Remarks: No data available

12.3 Bioaccumulative potential
No data available

12.4 Mobility in soil
No data available

12.5 Results of PBT and vPvB assessment
PBT/vPvB assessment not available as chemical safety assessment not required/not conducted

12.6 Other adverse effects
An environmental hazard cannot be excluded in the event of unprofessional handling or disposal.
Toxic to aquatic life with long lasting effects.

No data available

13. DISPOSAL CONSIDERATIONS

13.1 Waste treatment methods

Product
Offer surplus and non-recyclable solutions to a licensed disposal company. Contact a licensed professional waste disposal service to dispose of this material. Dissolve or mix the material with a combustible solvent and burn in a chemical incinerator equipped with an afterburner and scrubber.

Contaminated packaging
Dispose of as unused product.

14. TRANSPORT INFORMATION

DOT (US)
Not dangerous goods

IMDG
UN number: 3077 Class: 9 Packing group: III EMS-No: F-A, S-F
Proper shipping name: ENVIRONMENTALLY HAZARDOUS SUBSTANCE, SOLID, N.O.S. (Reaction product: bisphenol-A-(epichlorhydrin) and epoxy resin (number average molecular weight <= 700))
Marine pollutant:yes

IATA
UN number: 3077 Class: 9 Packing group: III
Proper shipping name: Environmentally hazardous substance, solid, n.o.s. (Reaction product: bisphenol-A-(epichlorhydrin) and epoxy resin (number average molecular weight <= 700))

Further information
EHS-Mark required (ADR 2.2.9.1.10, IMDG code 2.10.3) for single packagings and combination packagings containing inner packagings with Dangerous Goods > 5L for liquids or > 5kg for solids.

15. REGULATORY INFORMATION

SARA 302 Components
The following components are subject to reporting levels established by SARA Title III, Section 302:

	CAS-No.	Revision Date
Epichlorhydrin	106-89-8	2008-11-03

SARA 313 Components
The following components are subject to reporting levels established by SARA Title III, Section 313:

	CAS-No.	Revision Date
Epichlorhydrin	106-89-8	2008-11-03

SARA 311/312 Hazards
Acute Health Hazard, Chronic Health Hazard

Massachusetts Right To Know Components

	CAS-No.	Revision Date
Epichlorhydrin	106-89-8	2008-11-03

Pennsylvania Right To Know Components

	CAS-No.	Revision Date
Reaction product: bisphenol-A-(epichlorhydrin) and epoxy resin (number average molecular weight <= 700)	25068-38-6	
Epichlorhydrin	106-89-8	2008-11-03

New Jersey Right To Know Components

	CAS-No.	Revision Date
Reaction product: bisphenol-A-(epichlorhydrin) and epoxy resin (number average molecular weight <= 700)	25068-38-6	
Epichlorhydrin	106-89-8	2008-11-03

California Prop. 65 Components

WARNING! This product contains a chemical known to the	CAS-No.	Revision Date

State of California to cause cancer. Epichlorhydrin	106-89-8	2007-09-28

WARNING: This product contains a chemical known to the State of California to cause birth defects or other reproductive harm. Epichlorhydrin	CAS-No. 106-89-8	Revision Date 2007-09-28

16. OTHER INFORMATION

Full text of H-Statements referred to under sections 2 and 3.

Acute Tox.	Acute toxicity
Aquatic Acute	Acute aquatic toxicity
Aquatic Chronic	Chronic aquatic toxicity
Carc.	Carcinogenicity
Eye Dam.	Serious eye damage
Eye Irrit.	Eye irritation
Flam. Liq.	Flammable liquids
H226	Flammable liquid and vapour.
H301 + H311 + H331	Toxic if swallowed, in contact with skin or if inhaled
H302	Harmful if swallowed.
H314	Causes severe skin burns and eye damage.
H315	Causes skin irritation.
H317	May cause an allergic skin reaction.
H318	Causes serious eye damage.
H319	Causes serious eye irritation.
H350	May cause cancer.
H401	Toxic to aquatic life.
H402	Harmful to aquatic life.
H411	Toxic to aquatic life with long lasting effects.
Skin Corr.	Skin corrosion
Skin Irrit.	Skin irritation
Skin Sens.	Skin sensitisation

HMIS Rating

Health hazard:	2
Chronic Health Hazard:	*
Flammability:	0
Physical Hazard	0

NFPA Rating

Health hazard:	3
Fire Hazard:	0
Reactivity Hazard:	0

Further information

Copyright 2015 Sigma-Aldrich Co. LLC. License granted to make unlimited paper copies for internal use only.
The above information is believed to be correct but does not purport to be all inclusive and shall be used only as a guide. The information in this document is based on the present state of our knowledge and is applicable to the product with regard to appropriate safety precautions. It does not represent any guarantee of the properties of the product. Sigma-Aldrich Corporation and its Affiliates shall not be held liable for any damage resulting from handling or from contact with the above product. See www.sigma-aldrich.com and/or the reverse side of invoice or packing slip for additional terms and conditions of sale.

Preparation Information
Sigma-Aldrich Corporation
Product Safety – Americas Region
1-800-521-8956

Version: 3.7 Revision Date: 03/03/2015 Print Date: 07/29/2015

Hempadur 17369

HEMPADUR ZINC 17369

Conforms to Regulation (EC) No. 1907/2006 (REACH), Annex II, as amended by Regulation (EU) No. 453/2010 - Europe

SECTION 1: Identification of the substance/mixture and of the company/undertaking

1.1 Product identifier

Product name : HEMPADUR ZINC 17369

Product identity : 1736919830

Product type : epoxy zinc primer (base for multi-component product)

1.2 Relevant identified uses of the substance or mixture and uses advised against

Field of application : metal industry, ships and shipyards.

Ready-for-use mixture : 17360 = 17369 4 vol. / 97040 1 vol.

Identified uses : Consumer applications, Industrial applications, Used by spraying.

1.3 Details of the supplier of the safety data sheet

Company details : HEMPEL A/S
Lundtoftegårdsvej 91
DK-2800 Kgs. Lyngby
Denmark
Tel.: + 45 45 93 38 00
hempel@hempel.com

Date of issue : 8 October 2014

Date of previous issue : 26 June 2014.

1.4 Emergency telephone number

Emergency telephone number (with hours of operation)

+45 45 93 38 00 (08.00 - 17.00)
See section 4 First aid measures.

SECTION 2: Hazards identification

2.1 Classification of the substance or mixture

Product definition : Mixture

Classification according to Regulation (EC) No. 1272/2008 [CLP/GHS]

FLAMMABLE LIQUIDS - Category 3
SKIN CORROSION/IRRITATION - Category 2
SERIOUS EYE DAMAGE/ EYE IRRITATION - Category 2
SKIN SENSITIZATION - Category 1
AQUATIC HAZARD (ACUTE) - Category 1
AQUATIC HAZARD (LONG-TERM) - Category 1

Classification according to Directive 1999/45/EC [DPD]

Classification : R10
Xi; R36/38
R43
N; R50/53

See Section 16 for the full text of the R-phrases declared above.

See Section 11 for more detailed information on health effects and symptoms.

2.2 Label elements

Hazard pictograms :

Signal word : Warning

Hazard statements : H226 - Flammable liquid and vapor.
H319 - Causes serious eye irritation.
H315 - Causes skin irritation.
H317 - May cause an allergic skin reaction.
H410 - Very toxic to aquatic life with long lasting effects.

Precautionary statements :

General : If medical advice is needed, have product container or label at hand. Keep out of reach of children.

SECTION 2: Hazards identification

Prevention :	Avoid breathing vapors, spray or mists. Wear protective gloves/protective clothing/eye protection/face protection. Keep away from heat, hot surfaces, sparks, open flames and other ignition sources. No smoking.
Response :	IF IN EYES: Rinse cautiously with water for several minutes. Remove contact lenses, if present and easy to do. Continue rinsing. If skin irritation occurs: Get medical attention.
Storage :	Keep cool.
Disposal :	Dispose of contents and container in accordance with all local, regional, national and international regulations.
Hazardous ingredients :	xylene bisphenol A-(epichlorhydrin) epoxy resin MW =< 700 n-butanol bisphenol F-(epichlorhydrin) epoxy resin MW =< 700 (C12-C14) Alkylglycidylether middle molecular epoxy resin MMW 700-1200
Supplemental label elements :	Contains epoxy constituents. May produce an allergic reaction.

Special packaging requirements

Containers to be fitted with child-resistant fastenings :	Not applicable.
Tactile warning of danger :	Not applicable.

2.3 Other hazards

Other hazards which do not result in classification :	None known.

SECTION 3: Composition/information on ingredients

3.2 Mixtures

Product/ingredient name	Identifiers	%	Classification 67/548/EEC	Classification Regulation (EC) No. 1272/2008 [CLP]		Type
zinc powder - zinc dust (stabilized)	EC: 231-175-3 CAS: 7440-66-6 Index: 030-001-01-9	>=50 - <75	N; R50/53	Aquatic Acute 1, H400 Aquatic Chronic 1, H410	-	[1]
xylene	REACH #: 01-2119488216-32 EC: 215-535-7 CAS: 1330-20-7 Index: 601-022-00-9	>=1 - <5	R10 Xn; R20/21 Xi; R38	Flam. Liq. 3, H226 Acute Tox. 4, H312 Acute Tox. 4, H332 Skin Irrit. 2, H315	C	[1] [2]
bisphenol A-(epichlorhydrin) epoxy resin MW =< 700	REACH #: 01-2119456619-26 EC: 500-033-5 CAS: 25068-38-6 Index: 603-074-00-8	>=2.5 - <5	Xi; R36/38 R43 N; R51/53	Skin Irrit. 2, H315 Eye Irrit. 2, H319 Skin Sens. 1, H317 Aquatic Chronic 2, H411	-	[1]
zinc oxide	REACH #: 01-2119463881-32 EC: 215-222-5 CAS: 1314-13-2 Index: 030-013-00-7	>=2.5 - <25	N; R50/53	Aquatic Acute 1, H400 Aquatic Chronic 1, H410	-	[1]
n-butanol	REACH #: 01-2119484630-38 EC: 200-751-6 CAS: 71-36-3 Index: 603-004-00-6	>=1 - <3	R10 Xn; R22 Xi; R41, R37/38 R67	Flam. Liq. 3, H226 Acute Tox. 4, H302 Skin Irrit. 2, H315 Eye Dam. 1, H318 STOT SE 3, H335 and H336 (Respiratory tract irritation and Narcotic effects)	-	[1]
bisphenol F-(epichlorhydrin) epoxy resin MW =< 700	REACH #: 01-2119454392-40 CAS: 28064-14-4	>=1 - <2.5	Xi; R36/38 R43 N; R51/53	Skin Irrit. 2, H315 Eye Irrit. 2, H319 Skin Sens. 1, H317 Aquatic Chronic 2, H411	-	[1]
solvent naphtha (petroleum), light arom.	REACH #: 01-2119455851-35 EC: 265-199-0 CAS: *64742-95-6 Index: 649-356-00-4	>=1 - <2.5	Xn; R20, R65 Xi; R36/37/38 N; R51/53	Flam. Liq. 3, H226 Acute Tox. 4, H332 Skin Irrit. 2, H315 Eye Irrit. 2, H319 STOT SE 3, H335 (Respiratory tract irritation) Asp. Tox. 1, H304 Aquatic Chronic 2, H411	P	[1] [2]

SECTION 3: Composition/information on ingredients

			See Section 16 for the full text of the R-phrases declared above.	See Section 16 for the full text of the H statements declared above.	

There are no additional ingredients present which, within the current knowledge of the supplier and in the concentrations applicable, are classified as hazardous to health or the environment and hence require reporting in this section.

Type

[1] Substance classified with a health or environmental hazard
[2] Substance with a workplace exposure limit, see section 8.
[3] Substance meets the criteria for PBT according to Regulation (EC) No. 1907/2006, Annex XIII
[4] Substance meets the criteria for vPvB according to Regulation (EC) No. 1907/2006, Annex XIII
[5] Substance of equivalent concern

SECTION 4: First aid measures

4.1 Description of first aid measures

General : In all cases of doubt, or when symptoms persist, seek medical attention. Never give anything by mouth to an unconscious person.

If breathing is irregular, drowsiness, loss of consciousness or cramps: Call 112 and give immediate treatment (first aid).

Eye contact : Check for and remove any contact lenses. Immediately flush eyes with plenty of water for at least 15 minutes, occasionally lifting the upper and lower eyelids. Seek immediate medical attention.

Inhalation : Remove to fresh air. Keep person warm and at rest. If unconscious, place in recovery position and seek medical advice.

Skin contact : Remove contaminated clothing and shoes. Wash skin thoroughly with soap and water or use recognized skin cleanser. Do NOT use solvents or thinners.

Ingestion : If swallowed, seek medical advice immediately and show this container or label. Keep person warm and at rest. Do not induce vomiting unless directed to do so by medical personnel. Lower the head so that vomit will not re-enter the mouth and throat.

Protection of first-aiders : No action shall be taken involving any personal risk or without suitable training. It may be dangerous to the person providing aid to give mouth-to-mouth resuscitation. Wash contaminated clothing thoroughly with water before removing it, or wear gloves.

4.2 Most important symptoms and effects, both acute and delayed

Potential acute health effects

Eye contact : Causes serious eye irritation.

Inhalation : No known significant effects or critical hazards.

Skin contact : Causes skin irritation. May cause an allergic skin reaction.

Ingestion : Irritating to mouth, throat and stomach.

Over-exposure signs/symptoms

Eye contact : Adverse symptoms may include the following:
pain or irritation
watering
redness

Inhalation : No specific data.

Skin contact : Adverse symptoms may include the following:
irritation
redness

Ingestion : No specific data.

4.3 Indication of any immediate medical attention and special treatment needed

Notes to physician : Treat symptomatically. Contact poison treatment specialist immediately if large quantities have been ingested or inhaled.

Specific treatments : No specific treatment.

SECTION 5: Firefighting measures

5.1 Extinguishing media

Extinguishing media :	Recommended: Approved Class D extinguisher or smother with dry sand, dry clay or dry ground limestone. NOT TO BE USED: WATER. Risk of formation of very flammable and explosive vapours.

5.2 Special hazards arising from the substance or mixture

Hazards from the substance or mixture :	Flammable liquid and vapor. In a fire or if heated, a pressure increase will occur and the container may burst, with the risk of a subsequent explosion. Runoff to sewer may create fire or explosion hazard. This material is very toxic to aquatic life with long lasting effects. Fire water contaminated with this material must be contained and prevented from being discharged to any waterway, sewer or drain.
Hazardous combustion products :	Decomposition products may include the following materials: carbon oxides halogenated compounds metal oxide/oxides

5.3 Advice for firefighters

Promptly isolate the scene by removing all persons from the vicinity of the incident if there is a fire. No action shall be taken involving any personal risk or without suitable training. Fire will produce dense black smoke. Exposure to decomposition products may cause a health hazard. Cool closed containers exposed to fire with water. Do not release runoff from fire to drains or watercourses. Fire-fighters should wear appropriate protective equipment and self-contained breathing apparatus (SCBA) with a full face-piece operated in positive pressure mode. Clothing for fire-fighters (including helmets, protective boots and gloves) conforming to European standard EN 469 will provide a basic level of protection for chemical incidents.

SECTION 6: Accidental release measures

6.1 Personal precautions, protective equipment and emergency procedures

Do not use water. Violent reaction may occur. Exclude sources of ignition and be aware of explosion hazard. Ventilate the area. Refer to protective measures listed in sections 7 and 8. No action shall be taken involving any personal risk or without suitable training. If the product contaminates lakes, rivers, or sewers, inform the appropriate authorities in accordance with local regulations.

6.2 Environmental precautions

Avoid dispersal of spilled material and runoff and contact with soil, waterways, drains and sewers. Inform the relevant authorities if the product has caused environmental pollution (sewers, waterways, soil or air). Water polluting material. May be harmful to the environment if released in large quantities.

6.3 Methods and materials for containment and cleaning up

Stop leak if without risk. Move containers from spill area. Approach release from upwind. Prevent entry into sewers, water courses, basements or confined areas. Wash spillages into an effluent treatment plant or proceed as follows. Contain and collect spillage with non-combustible, absorbent material e.g. sand, earth, vermiculite or diatomaceous earth and place in container for disposal according to local regulations (see Section 13). Use spark-proof tools and explosion-proof equipment. Contaminated absorbent material may pose the same hazard as the spilled product.

6.4 Reference to other sections

See Section 1 for emergency contact information.
See Section 8 for information on appropriate personal protective equipment.
See Section 13 for additional waste treatment information.

SECTION 7: Handling and storage

7.1 Precautions for safe handling

Vapors are heavier than air and may spread along floors. Vapors may form explosive mixtures with air. Prevent the creation of flammable or explosive concentrations of vapors in air and avoid vapor concentrations higher than the occupational exposure limits. In addition, the product should be used only in areas from which all naked lights and other sources of ignition have been excluded. Electrical equipment should be protected to the appropriate standard. To dissipate static electricity during transfer, ground drum and connect to receiving container with bonding strap. No sparking tools should be used. Contains epoxy constituents. Avoid all possible skin contact with epoxy and amine containing products, they may cause allergic reactions. Open with care, danger of overpressure.
Avoid inhalation of vapour, dust and spray mist. Avoid contact with skin and eyes. Eating, drinking and smoking should be prohibited in area where this material is handled, stored and processed. Appropriate personal protective equipment: see Section 8. Always keep in containers made from the same material as the original one.

7.2 Conditions for safe storage, including any incompatibilities

SECTION 7: Handling and storage

Store in accordance with local regulations for flammable liquids. Store in a cool, well-ventilated area away from incompatible materials and ignition sources. Keep out of the reach of children. Keep away from: Oxidizing agents, strong alkalis, strong acids as well as of amines, alcohols and water. No smoking. Prevent unauthorized access. Containers that are opened must be carefully resealed and kept upright to prevent leakage.

7.3 Specific end use(s)

See separate Product Data Sheet for recommendations or industrial sector specific solutions.

SECTION 8: Exposure controls/personal protection

8.1 Control parameters

Product/ingredient name	Exposure limit values
xylene	**EU OEL (Europe, 12/2009). Absorbed through skin.** STEL: 442 mg/m³ 15 minutes. STEL: 100 ppm 15 minutes. TWA: 221 mg/m³ 8 hours. TWA: 50 ppm 8 hours.
solvent naphtha (petroleum), light arom.	**EU OEL (Europe).** TWA: 120 mg/m³ 8 hours. Form: TWA: 25 ppm 8 hours. Form:

Recommended monitoring procedures

If this product contains ingredients with exposure limits, personal, workplace atmosphere or biological monitoring may be required to determine the effectiveness of the ventilation or other control measures and/or the necessity to use respiratory protective equipment. Reference should be made to monitoring standards, such as the following: European Standard EN 689 (Workplace atmospheres - Guidance for the assessment of exposure by inhalation to chemical agents for comparison with limit values and measurement strategy) European Standard EN 14042 (Workplace atmospheres - Guide for the application and use of procedures for the assessment of exposure to chemical and biological agents) European Standard EN 482 (Workplace atmospheres - General requirements for the performance of procedures for the measurement of chemical agents) Reference to national guidance documents for methods for the determination of hazardous substances will also be required.

Derived effect levels

No DNELs/DMELs available.

Predicted effect concentrations

No PNECs available.

8.2 Exposure controls

Appropriate engineering controls

Arrange sufficient ventilation by local exhaust ventilation and good general ventilation to keep the airborne concentrations of vapors or dust lowest possible and below their respective threshold limit value. Ensure that eyewash stations and safety showers are proximal to the work-station location.

Individual protection measures

General : Gloves must be worn for all work that may result in soiling. Apron/coveralls/protective clothing must be worn when soiling is so great that regular work clothes do not adequately protect skin against contact with the product. Safety eyewear should be used when there is a likelihood of exposure.

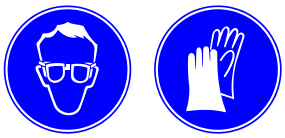

Hygiene measures : Wash hands, forearms, and face thoroughly after handling compounds and before eating, smoking, using lavatory, and at the end of day.

Eye/face protection : Safety eyewear complying with an approved standard should be used when a risk assessment indicates this is necessary to avoid exposure to liquid splashes, mists, gases or dusts. If contact is possible, the following protection should be worn, unless the assessment indicates a higher degree of protection: chemical splash goggles.

Hand protection : Wear chemical-resistant gloves (tested to EN374) in combination with 'basic' employee training. The quality of the chemical-resistant protective gloves must be chosen as a function of the specific workplace concentrations and quantity of hazardous substances.

SECTION 8: Exposure controls/personal protection

Since the actual work situation is unknown. Supplier of gloves should be contacted in order to find the appropriate type. Below listed glove(s) should be regarded as generic advice:

Recommended: Silver Shield / 4H gloves, Viton®
May be used: nitrile rubber, butyl rubber, polyvinyl alcohol (PVA)
Not recommended: neoprene rubber, natural rubber (latex), polyvinyl chloride (PVC)

Body protection : Personal protective equipment for the body should be selected based on the task being performed and the risks involved handling this product.
Wear suitable protective clothing. Always wear protective clothing when spraying.

Respiratory protection : If working areas have insufficient ventilation: When the product is applied by means that will not generate an aerosol such as, brush or roller wear half or totally covering mask equipped with gas filter of type A, when grinding use particle filter of type P. When the product is applied by spraying and for continuous or prolonged work always wear an air-fed respirator e.g. hood with supply of fresh or compressed air or a full face, powered air purifying filter. Be sure to use an approved/certified respirator or equivalent.

Environmental exposure controls

Emissions from ventilation or work process equipment should be checked to ensure they comply with the requirements of environmental protection legislation. In some cases, fume scrubbers, filters or engineering modifications to the process equipment will be necessary to reduce emissions to acceptable levels.

SECTION 9: Physical and chemical properties

9.1 Information on basic physical and chemical properties

Physical state :	Liquid.
Odor :	Amine-like.
pH :	Testing not relevant or not possible due to nature of the product.
Melting point/freezing point :	419.85°C This is based on data for the following ingredient: Zinc
Boiling point/boiling range :	Testing not relevant or not possible due to nature of the product.
Flash point :	Closed cup: 24°C (75.2°F)
Evaporation rate :	Testing not relevant or not possible due to nature of the product.
Flammability :	Highly flammable in the presence of the following materials or conditions: open flames, sparks and static discharge and heat.
Lower and upper explosive (flammable) limits :	0.8 - 11.3 vol %
Vapor pressure :	Testing not relevant or not possible due to nature of the product.
Vapor density :	Testing not relevant or not possible due to nature of the product.
Relative density :	3.214 g/cm³
Solubility(ies) :	Partially soluble in the following materials: cold water and hot water.
Partition coefficient (LogKow) :	Testing not relevant or not possible due to nature of the product.
Auto-ignition temperature :	Lowest known value: 355°C (671°F) (n-butanol).
Decomposition temperature :	Testing not relevant or not possible due to nature of the product.
Viscosity :	Testing not relevant or not possible due to nature of the product.
Explosive properties :	Explosive in the presence of the following materials or conditions: open flames, sparks and static discharge and heat. Slightly explosive in the presence of the following materials or conditions: moisture.
Oxidizing properties :	Testing not relevant or not possible due to nature of the product.

9.2 Other information

Solvent(s) % by weight :	Weighted average: 9 %
Water % by weight :	Weighted average: 0 %
VOC content :	299.9 g/l
VOC content, Ready-for-use mixture :	310.6 g/l
TOC Content :	Weighted average: 245 g/l

SECTION 9: Physical and chemical properties

Solvent Gas : Weighted average: 0.075 m³/l

SECTION 10: Stability and reactivity

10.1 Reactivity

No specific test data related to reactivity available for this product or its ingredients.

10.2 Chemical stability

The product is stable.

10.3 Possibility of hazardous reactions

Under normal conditions of storage and use, hazardous reactions will not occur.

10.4 Conditions to avoid

Avoid all possible sources of ignition (spark or flame). Do not pressurize, cut, weld, braze, solder, drill, grind or expose containers to heat or sources of ignition.

10.5 Incompatible materials

Highly reactive or incompatible with the following materials: oxidizing materials and acids.
Reactive or incompatible with the following materials: reducing materials, organic materials, alkalis and moisture.

10.6 Hazardous decomposition products

When exposed to high temperatures (i.e. in case of fire) harmful decomposition products may be formed:

Decomposition products may include the following materials: carbon oxides halogenated compounds metal oxide/oxides

SECTION 11: Toxicological information

11.1 Information on toxicological effects

Exposure to component solvent vapor concentrations may result in adverse health effects such as mucous membrane and respiratory system irritation and adverse effects on the kidneys, liver and central nervous system. Solvents may cause some of the above effects by absorption through the skin. Symptoms and signs include headaches, dizziness, fatigue, muscular weakness, drowsiness and, in extreme cases, loss of consciousness. Repeated or prolonged contact with the preparation may cause removal of natural fat from the skin, resulting in non-allergic contact dermatitis and absorption through the skin. If splashed in the eyes, the liquid may cause irritation and reversible damage. Accidental swallowing may cause stomach pain. Chemical lung inflammation may occur if the product is taken into the lungs via vomiting.
Epoxy and amine containing products can cause skin disorders such as allergic eczema. The allergy may arise after only a short exposure period.

Acute toxicity

Product/ingredient name	Result	Species	Dose	Exposure
xylene	LC50 Inhalation Gas.	Rat	5000 ppm	4 hours
	LC50 Inhalation Vapor	Rat	6350 ppm	4 hours
	LD50 Dermal	Rabbit	>2000 mg/kg	-
	LD50 Oral	Rat	4300 mg/kg	-
bisphenol A-(epichlorhydrin) epoxy resin MW =< 700	LD50 Dermal	Rabbit	>2000 mg/kg	-
	LD50 Dermal	Rat	>2000 mg/kg	-
	LD50 Oral	Rat	>2000 mg/kg	-
zinc oxide	LC50 Inhalation Vapor	Rat	>5.7 mg/l	4 hours
	LD50 Oral	Rat	>15000 mg/kg	-
n-butanol	LC50 Inhalation Vapor	Rat	24000 mg/m³	4 hours
	LD50 Dermal	Rabbit	3400 mg/kg	-
	LD50 Oral	Rat	790 mg/kg	-
bisphenol F-(epichlorhydrin) epoxy resin MW =< 700	LD50 Dermal	Rabbit	>2000 mg/kg	-
	LD50 Oral	Rat	>2000 mg/kg	-
solvent naphtha (petroleum), light arom.	LC50 Inhalation Vapor	Rat	>5 mg/l	4 hours
	LD50 Dermal	Rabbit	>2000 mg/kg	-
	LD50 Oral	Rat	8400 mg/kg	-

Acute toxicity estimates

SECTION 11: Toxicological information

Route	ATE value
Oral Dermal Inhalation (gases) Inhalation (vapors)	53490 mg/kg 43153.3 mg/kg 196151.2 ppm 1559.6 mg/l

Irritation/Corrosion

Product/ingredient name	Result	Species	Score	Exposure
zinc powder - zinc dust (stabilized)	Skin - Mild irritant	Human	-	72 hours 300 Micrograms Intermittent
xylene	Eyes - Severe irritant	Rabbit	-	24 hours 5 milligrams
	Skin - Moderate irritant	Rabbit	-	24 hours 500 milligrams
bisphenol A-(epichlorhydrin) epoxy resin MW =< 700	Eyes - Moderate irritant	Rabbit	-	24 hours 20 milligrams
	Skin - Moderate irritant	Rabbit	-	24 hours 500 microliters
zinc oxide	Eyes - Mild irritant	Rabbit	-	24 hours 500 milligrams
	Skin - Mild irritant	Rabbit	-	24 hours 500 milligrams
n-butanol	Eyes - Severe irritant	Rabbit	-	24 hours 2 milligrams
	Skin - Moderate irritant	Rabbit	-	24 hours 20 milligrams
solvent naphtha (petroleum), light arom.	Eyes - Mild irritant	Rabbit	-	24 hours 100 microliters

Specific target organ toxicity (single exposure)

Product/ingredient name	Category	Route of exposure	Target organs
n-butanol	Category 3	Not applicable.	Respiratory tract irritation and Narcotic effects
solvent naphtha (petroleum), light arom.	Category 3	Not applicable.	Respiratory tract irritation

Specific target organ toxicity (repeated exposure)

Product/ingredient name	Category	Route of exposure	Target organs
No known data avaliable in our database.			

Aspiration hazard

Product/ingredient name	Result
solvent naphtha (petroleum), light arom.	ASPIRATION HAZARD - Category 1

Information on the likely routes of exposure

Routes of entry anticipated: Oral, Dermal, Inhalation.

Potential chronic health effects

Sensitization : Contains bisphenol A-(epichlorhydrin) epoxy resin MW =< 700, bisphenol F-(epichlorhydrin) epoxy resin MW =< 700, (C12-C14) Alkylglycidylether, middle molecular epoxy resin MMW 700-1200. May produce an allergic reaction.

Other information : No additional known significant effects or critical hazards.

SECTION 12: Ecological information

12.1 Toxicity

Do not allow to enter drains or watercourses. Very toxic to aquatic life with long lasting effects.

Product/ingredient name	Result	Species	Exposure
zinc powder - zinc dust (stabilized)	Acute EC50 106 µg/l Fresh water	Algae - Pseudokirchneriella subcapitata - Exponential growth phase	72 hours
	Acute EC50 10000 µg/l Fresh water	Aquatic plants - Lemna minor	4 days
	Acute IC50 65 µg/l Marine water	Algae - Nitzschia closterium - Exponential growth phase	4 days
	Acute LC50 65 µg/l Fresh water	Crustaceans - Ceriodaphnia dubia - Neonate	48 hours
	Acute LC50 68 µg/l Fresh water	Daphnia - Daphnia magna	48 hours
	Acute LC50 2.72 µg/l Fresh water	Fish - Oncorhynchus mykiss - Egg	96 hours
	Chronic EC10 27.3 µg/l Fresh water	Algae - Pseudokirchneriella subcapitata - Exponential growth phase	72 hours
	Chronic EC10 59.2 µg/l Fresh water	Daphnia - Daphnia magna	21 days
	Chronic NOEC 9 mg/l Fresh water	Aquatic plants - Ceratophyllum demersum	3 days

SECTION 12: Ecological information

	Chronic NOEC 178 µg/l Marine water	Crustaceans - Palaemon elegans	21 days
	Chronic NOEC 2.6 µg/l Fresh water	Fish - Cyprinus carpio	4 weeks
bisphenol A-(epichlorhydrin) epoxy resin MW =< 700	Acute EC50 >11 mg/l	Algae	72 hours
	Acute EC50 1.4 to 1.7 mg/l	Daphnia - Daphnia magna	48 hours
	Acute LC50 3.1 mg/l	Fish - fathead minnow (Pimephales promelas)	96 hours
zinc oxide	LC50 1.1 ppm Fresh water	Fish - Pseudokirchneriella subcapitata - Exponential growth phase	96 hours
	Acute EC50 0.042 mg/l Fresh water	Algae - Pseudokirchneriella subcapitata - Exponential growth phase	72 hours
	Acute LC50 98 µg/l Fresh water	Daphnia - Daphnia magna - Neonate	48 hours
	Chronic NOEC 0.017 mg/l Fresh water	Algae - Pseudokirchneriella subcapitata - Exponential growth phase	72 hours
n-butanol	Acute LC50 1.376 mg/l	Fish	96 hours
bisphenol F-(epichlorhydrin) epoxy resin MW =< 700	Acute EC50 3.5 mg/l	Daphnia - Daphnia magna	48 hours
	Acute LC50 5.7 mg/l	Fish - guldskalle (Leuciscus idus)	96 hours
solvent naphtha (petroleum), light arom.	Acute EC50 19 mg/l	Algae - Pseudokirchneriella subcapitata (green algae)	96 hours
	Acute EC50 6.14 mg/l	Daphnia - Daphnia magna	48 hours
	Acute LC50 9.22 mg/l	Fish - Oncorhynchus mykiss (rainbow trout)	96 hours

12.2 Persistence and degradability

Product/ingredient name	Test	Result	Dose	Inoculum
xylene	-	>60 % - Readily - 28 days	-	-
bisphenol A-(epichlorhydrin) epoxy resin MW =< 700	OECD 302B Inherent Biodegradability: Zahn-Wellens/ EMPA Test	12 % - Not readily - 28 days	-	-
n-butanol	OECD 301D Ready Biodegradability - Closed Bottle Test	92 % - 20 days	-	-
solvent naphtha (petroleum), light arom.	-	>70 % - Readily - 28 days	-	-

Product/ingredient name	Aquatic half-life	Photolysis	Biodegradability
xylene	-	-	Readily
bisphenol A-(epichlorhydrin) epoxy resin MW =< 700	-	12%; 28 day(s)	Not readily
n-butanol	-	-	Readily
bisphenol F-(epichlorhydrin) epoxy resin MW =< 700	-	10 to 16%; 28 day(s)	-
solvent naphtha (petroleum), light arom.	-	-	Readily

12.3 Bioaccumulative potential

Product/ingredient name	$LogP_{ow}$	BCF	Potential
xylene	3.12	8.1 to 25.9	low
bisphenol A-(epichlorhydrin) epoxy resin MW =< 700	2.64 to 3.78	31	low
zinc oxide	2.2	60960	high
n-butanol	1	-	low
solvent naphtha (petroleum), light arom.	-	10 to 2500	high

12.4 Mobility in soil

Soil/water partition coefficient (K_{OC}) : No known data avaliable in our database.

Mobility : No known data avaliable in our database.

12.5 Results of PBT and vPvB assessment

PBT : Not applicable.

vPvB : Not applicable.

SECTION 12: Ecological information

12.6 Other adverse effects

No known significant effects or critical hazards.

SECTION 13: Disposal considerations

13.1 Waste treatment methods

The generation of waste should be avoided or minimized wherever possible. Residues of the product is listed as hazardous waste. Dispose of according to all state and local applicable regulations. Waste should not be disposed of untreated to the sewer unless fully compliant with the requirements of all authorities with jurisdiction. Spillage, remains, discarded clothes and similar should be discarded in a fireproof container.

European waste catalogue no. (EWC) is given below.

European waste catalogue (EWC) : 08 01 11*

Packaging

The generation of waste should be avoided or minimized wherever possible. Waste packaging should be recycled. Incineration or landfill should only be considered when recycling is not feasible.

SECTION 14: Transport information

Transport may take place according to national regulation or ADR for transport by road, RID for transport by train, IMDG for transport by sea, IATA for transport by air.

	14.1 UN no.	14.2 Proper shipping name	14.3 Transport hazard class(es)	14.4 PG*	14.5 Env*	Additional information
ADR/RID Class	UN1263	PAINT	3 -	III	Yes.	The environmentally hazardous substance mark is not required when transported in sizes of ≤5 L or ≤5 kg. **Special provisions** 640 (E) **Tunnel code** (D/E)
IMDG Class	UN1263	PAINT. (Zinc)	3 -	III	Yes.	The marine pollutant mark is not required when transported in sizes of ≤5 L or ≤5 kg. **Emergency schedules (EmS)** F-E, S-E
IATA Class	UN1263	PAINT	3 -	III	No.	The environmentally hazardous substance mark may appear if required by other transportation regulations.

PG* : Packing group
Env.* : Environmental hazards

14.6 Special precautions for user

Transport within user's premises: always transport in closed containers that are upright and secure. Ensure that persons transporting the product know what to do in the event of an accident or spillage.

14.7 Transport in bulk according to Annex II of MARPOL 73/78 and the IBC Code

Not applicable.

SECTION 15: Regulatory information

15.1 Safety, health and environmental regulations/legislation specific for the substance or mixture

EU Regulation (EC) No. 1907/2006 (REACH) Annex XIV - List of substances subject to authorization - Substances of very high concern

Annex XIV

None of the components are listed.

Substances of very high concern

None of the components are listed.

Annex XVII - Restrictions on the manufacture, placing on the market and use of certain dangerous substances, mixtures and articles

Not applicable.

Other EU regulations

Seveso category This product is controlled under the Seveso III Directive.

Seveso category
P5c: Flammable liquids 2 and 3 not falling under P5a or P5b E1: Hazardous to the aquatic environment - Acute 1 or Chronic 1 C6: Flammable (R10) C9i: Very toxic for the environment

15.2 Chemical Safety Assessment

This product contains substances for which Chemical Safety Assessments are still required.

SECTION 16: Other information

Abbreviations and acronyms :

ATE = Acute Toxicity Estimate
CLP = Classification, Labelling and Packaging Regulation [Regulation (EC) No. 1272/2008]
EUH statement = CLP-specific Hazard statement
RRN = REACH Registration Number
DNEL = Derived No Effect Level
PNEC = Predicted No Effect Concentration

Full text of abbreviated R phrases :

R10- Flammable.
R20- Harmful by inhalation.
R22- Harmful if swallowed.
R20/21- Harmful by inhalation and in contact with skin.
R65- Harmful: may cause lung damage if swallowed.
R41- Risk of serious damage to eyes.
R38- Irritating to skin.
R36/38- Irritating to eyes and skin.
R37/38- Irritating to respiratory system and skin.
R36/37/38- Irritating to eyes, respiratory system and skin.
R43- May cause sensitization by skin contact.
R67- Vapors may cause drowsiness and dizziness.
R50/53- Very toxic to aquatic organisms, may cause long-term adverse effects in the aquatic environment.
R51/53- Toxic to aquatic organisms, may cause long-term adverse effects in the aquatic environment.

Full text of classifications [DSD/DPD] :

Xn - Harmful
Xi - Irritant
N - Dangerous for the environment

Full text of abbreviated H statements :

H226	Flammable liquid and vapor.
H302 (oral)	Harmful if swallowed.
H304	May be fatal if swallowed and enters airways.
H312 (dermal)	Harmful in contact with skin.
H315	Causes skin irritation.
H317	May cause an allergic skin reaction.
H318	Causes serious eye damage.
H319	Causes serious eye irritation.
H332 (inhalation)	Harmful if inhaled.
H335 (Respiratory tract irritation)	May cause respiratory irritation. (Respiratory tract irritation)
H335 and H336 (Respiratory tract irritation and Narcotic effects)	May cause respiratory irritation. May cause drowsiness and dizziness. (Respiratory tract irritation and Narcotic effects)
H400	Very toxic to aquatic life.
H410	Very toxic to aquatic life with long lasting effects.
H411	Toxic to aquatic life with long lasting effects.

SECTION 16: Other information

Full text of classifications [CLP/GHS] :

Acute Tox. 4, H302	ACUTE TOXICITY (oral) - Category 4
Acute Tox. 4, H312	ACUTE TOXICITY (dermal) - Category 4
Acute Tox. 4, H332	ACUTE TOXICITY (inhalation) - Category 4
Aquatic Acute 1, H400	AQUATIC HAZARD (ACUTE) - Category 1
Aquatic Chronic 1, H410	AQUATIC HAZARD (LONG-TERM) - Category 1
Aquatic Chronic 2, H411	AQUATIC HAZARD (LONG-TERM) - Category 2
Asp. Tox. 1, H304	ASPIRATION HAZARD - Category 1
Eye Dam. 1, H318	SERIOUS EYE DAMAGE/ EYE IRRITATION - Category 1
Eye Irrit. 2, H319	SERIOUS EYE DAMAGE/ EYE IRRITATION - Category 2
Flam. Liq. 3, H226	FLAMMABLE LIQUIDS - Category 3
Skin Irrit. 2, H315	SKIN CORROSION/IRRITATION - Category 2
Skin Sens. 1, H317	SKIN SENSITIZATION - Category 1
STOT SE 3, H335 (Respiratory tract irritation)	SPECIFIC TARGET ORGAN TOXICITY (SINGLE EXPOSURE) (Respiratory tract irritation) - Category 3
STOT SE 3, H335 and H336 (Respiratory tract irritation and Narcotic effects)	SPECIFIC TARGET ORGAN TOXICITY (SINGLE EXPOSURE) (Respiratory tract irritation and Narcotic effects) - Category 3

Procedure used to derive the classification according to Regulation (EC) No. 1272/2008 [CLP/GHS]

Classification	Justification
FLAMMABLE LIQUIDS - Category 3	On basis of test data
SKIN CORROSION/IRRITATION - Category 2	Calculation method
SERIOUS EYE DAMAGE/ EYE IRRITATION - Category 2	Calculation method
SKIN SENSITIZATION - Category 1	Calculation method
AQUATIC HAZARD (ACUTE) - Category 1	Calculation method
AQUATIC HAZARD (LONG-TERM) - Category 1	Calculation method

Notice to reader

Indicates information that has changed from previously issued version.

The information contained in this safety data sheet is based on the present state of knowledge and EU and national legislation. It provides guidance on health, safety and environmental aspects for handling the product in a safe way and should not be construed as any guarantee of the technical preformance or suitability for particular applications.
It is always the duty of the user/employer to ascertain that the work is planned and carried out in accordance with the national regulations.

MATERIAL SAFETY DATA SHEET

SECTION I

Date of Preparation: December, 2000 Rev May, 2004

PRODUCT NAME: Flex-Guard 250
PRODUCT CLASS: Epoxy Resin, Part A
PRODUCT TYPE: Bisphenol F/Epichlorohydrin Resin

D.O.T. CATEGORY: Chemical, NOIBN

MANUFACTURER: Environmental Coatings
4702 E. Virginia Street.
Mesa, Arizona 85215

TELEPHONE: 1-480-984-7608
EMERGENCY: 1-800/535-5053 INFOTRAC

SECTION II - INGREDIENTS

100% Bisphenol F/Epichlorohydrin Epoxy Resin CAS NO. 28064-14-4

SECTION III - HEALTH INFORMATION

The health effects noted below are consistent with requirements under the OSHA hazard Communication Standard (29CFR 1910.1200).

EYE CONTACT: Product may be moderately irritating to the eyes.
SKIN CONTACT: Product may be moderately irritating to the skin and may cause skin sensitization.
INHALATION: Not expected to be a relevant route of exposure. However, high vapor or aerosol mist concentrations may be irritating tot he nose, throat and upper respiratory tract.
INGESTION: Not expected to be a relevant route of exposure. However, product is predicted to have a low order of acute oral toxicity.
SIGNS AND SYMPTOMS: Irritation as noted. Skin sensitization (allergy) may be evidenced by rash, especially hives.
AGGRAVATED MEDICAL CONDITIONS: Preexisting skin, eye and respiratory disorders may be aggravated by exposure to the product.

SECTION IV – OCCUPATIONAL EXPOSURE LIMITS

No OSHA or ACGIH limits have been established for this product.

SECTION V - EMERGENCY AND FIRST AID PROCEDURES

EYE CONTACT:
Flush eyes with plenty of water for 15 minutes while holding eyelids open. Get medical attention.
SKIN CONTACT:
Remove contaminated clothing/shoes and wipe excess from skin. Flush skin with water. Follow by washing with soap and water. If irritation occurs, get medical attention. Do not reuse clothing until cleaned. Contaminated leather articles, including shoes, cannot be decontaminated and should be destroyed to prevent use.
INHALATION:
Remove victim to fresh air and provide oxygen if breathing is difficult. Give artificial respiration if not breathing. Get medical attention.
INGESTION:
Do not induce vomiting. In general, no treatment is necessary unless large quantities of product are ingested. However, get medical advice.
NOTE TO PHYSICIAN:
In general, emesis induction is unnecessary in high viscosity, low volatility products, e.g. neat epoxy resins.

SECTION VI – SUPPLEMENTAL HEALTH INFORMATION

Epichlorohydrin, an impurity in this product (<50 ppm), has been reported to product cancer in laboratory animals and to product mutagenic changes in bacteria and cultured human cells. It has been established by the International Agency for Research on Cancer (IARC) as a probable human carcinogen (IARC Grout 2A) based on the following conclusions: Human evidence – inadequate; animal evidence – sufficient. It has been classified as an anticipated human carcinogen by the National Toxicology Program (NTP).

SECTION VII – PHYSICAL DATA

BOILING POINT: N/A
SPECIFIC GRAVITY: 1.2
VAPOR PRESSURE: N/A
MELTING POINT: N/A
SOLUBILITY IN WATER: Negligible
APPEARANCE AND ODOR: Light yellow, Viscous liquid.
EVAPORATION RATE: N/A

SECTION VIII – FIRE AND EXPLOSION HAZARDS

FLASH POINT: >200° F. (Pensky Martin Closed Cup)
EXTINGUISHING MEDIA: Use water fog, alcohol foam, dry chemical or CO_2.
SPECIAL FIRE FIGHTING PROCEDURES: Material will not burn unless preheated. Do not enter confined fire space without full bunker gear (helmet with face shield, bunker coats, gloves and rubber boots), including a positive pressure NIOSH approved self-contained breathing apparatus. Cool fire exposed containers with water.
UNUSUAL FIRE AND EXPLOSION HAZARDS: None

SECTION IX - REACTIVITY DATA

STABILITY: Stable
HAZARDOUS POLYMERIZATION: Will not occur.
CONDITIONS AND MATERIALS TO AVOID: Can react vigorously with strong oxidizing agents, strong Lewis or mineral acids, and strong mineral and organic bases/especially primary and secondary aliphatic amines.

HAZARDOUS DECOMPOSITION PRODUCTS: Carbon monoxide, aldehydes, acids, and other organic substances may be formed during thermal and oxidative decomposition. Reaction with some curing agents may produce considerable heat. Run-a-way cure reactions may char and decompose the resin system, generating unidentified fumes and vapors, which may be toxic.

SECTION X - EMPLOYEE PROTECTION

RESPIRATORY PROTECTION: Not ordinarily required.
PROTECTIVE CLOTHING: Avoid contact with eyes. Wear safety glasses or goggles as appropriate. Avoid prolonged or repeated contact with skin. Wear chemical-resistant gloves and other clothing as required to minimize contact.
ADDITIONAL PROTECTIVE MEASURES: None.

SECTION XI – ENVIRONMENTAL PROCEDURES

SPILL OR LEAK PROCEDURES:
May burn although not readily ignitable. Use cautious judgement with cleaning up large spills. LARGE SPILLS - Wear respirator and protective clothing as appropriate. Shut off source of leak, if safe to do so. Dike and contain. Remove with vacuum trucks or pump to storage/salvage vessels. Soak up residue with an absorbent such as clay, sand or other suitable material; dispose of properly. Flush area with water to remove trace residue.

SMALL SPILLS - Take up with an absorbent material and dispose of properly.

MATERIAL SAFETY DATA SHEET

SECTION XII – SPECIAL PRECAUTIONS

Store in cool, dry place. Keep away from open flames and high temperatures. Containers, even those that have been emptied, may contain hazardous residues. Handle in accordance with the hazard potential of curing agents used. Avoid contact with eyes. Avoid prolonged or repeated contact with skin. Wash thoroughly after handling. Launder contaminated clothing before reusing. Contaminated leather articles, including shoes, cannot be decontaminated and should be destroyed to prevent reuse.
Warning! May cause skin and eye irritation. May cause skin sensitization. Minimize bodily contact. Wash with soap and water before eating, drinking, smoking, applying cosmetics, or using toilet facilities.
Heating this resin above 300 deg. F. in the presence of air may cause slow oxidative decomposition; above 500 deg. F., polymerization may occur. Some curing agents, e.g., aliphatic polyamines can product exothermic reactions which in large masses can cause runaway polymerization and charring of the reactants. Fumes and vapors from these thermal and chemical decompositions vary widely in composition and toxicity. Do not breathe fumes. Use a NIOSH-approved respirator as required to prevent over exposure. In accord with 29 CFR 1910.134, use either an atmosphere-supplying respirator or an air-purifying respirator for organic vapors.

SECTION XIII - TRANSPORTATION INFORMATION

Department of Transportation Classification: Not Hazardous by D.O.T. Regulations
D.O.T. Proper Shipping Name: None

SECTION XIV - OTHER REGULATORY CONTROLS

This product is listed on the EPA/TSCA inventory of chemical substances.
Protection of Stratospheric Ozone (Pursuant to Section 611 of the clean air act amendments of 1990): Per 40 CFR Part 82. This product does not contain nor was it directly manufactured with any Class I or Class II ozone-depleting substances.

SECTION XV - STATE REGULATORY INFORMATION

The following chemicals are specifically listed by individual states; other product specific health and safety data in other sections of the MSDS may also be applicable for State requirements. For details on your regulatory requirements you should contact the appropriate agency in your state.

STATE LISTED COMPONENT	CAS No.	Percent	State Code
Epichlorohydrin	106-89-8	<50 ppm	MA, PA, RI ,CA65C/R

MATERIAL SAFETY DATA SHEET

CA = California Hazardous Substance List; CA65C, CA65R = California Safe Drinking Water and Toxics Enforcement Act of 1986 or Proposition 65 List; MA = Massachusetts Subs. List, PA = Pennsylvania Haz. Subst. List, RI = Rhode Island Haz. Subst. List.
PROPOSITION 65 Footnote: CA65C – The chemical identified with this code is known to the State of California to cause birth defects or other reproductive harm. CA65C/R – The chemical identified with this code is known to the State of California to cause both cancer and birth defects or other reproductive harm.

THE INFORMATION HEREIN RELATES TO THE PRODUCT NAMED AND IS BASED UPON INFORMATION CONSIDERED TO BE ACCURATE. NO WARRANTY EXPRESSED OR IMPLIED IS INTENDED.

MATERIAL SAFETY DATA SHEET

No information on this page.

SAFETY DATA SHEET

Version 3.7
Revision Date 03/03/2015
Print Date 07/29/2015

1. PRODUCT AND COMPANY IDENTIFICATION

1.1 Product identifiers

Product name	:	Poly(Bisphenol A-*co*-epichlorohydrin)
Product Number	:	181196
Brand	:	Aldrich
CAS-No.	:	25068-38-6

1.2 Relevant identified uses of the substance or mixture and uses advised against

Identified uses	:	Laboratory chemicals, Manufacture of substances

1.3 Details of the supplier of the safety data sheet

Company	:	Sigma-Aldrich 3050 Spruce Street SAINT LOUIS MO 63103 USA
Telephone	:	+1 800-325-5832
Fax	:	+1 800-325-5052

1.4 Emergency telephone number

Emergency Phone #	:	(314) 776-6555

2. HAZARDS IDENTIFICATION

2.1 Classification of the substance or mixture

GHS Classification in accordance with 29 CFR 1910 (OSHA HCS)
Acute toxicity, Oral (Category 4), H302
Skin corrosion (Category 1B), H314
Serious eye damage (Category 1), H318
Skin sensitisation (Category 1), H317
Carcinogenicity (Category 1B), H350
Acute aquatic toxicity (Category 2), H401
Chronic aquatic toxicity (Category 2), H411

For the full text of the H-Statements mentioned in this Section, see Section 16.

2.2 GHS Label elements, including precautionary statements

Pictogram

Signal word: Danger

Hazard statement(s)

H302	Harmful if swallowed.
H314	Causes severe skin burns and eye damage.
H317	May cause an allergic skin reaction.
H318	Causes serious eye damage.
H350	May cause cancer.
H411	Toxic to aquatic life with long lasting effects.

Precautionary statement(s)

P201	Obtain special instructions before use.

P202	Do not handle until all safety precautions have been read and understood.
P260	Do not breathe dust or mist.
P264	Wash skin thoroughly after handling.
P270	Do not eat, drink or smoke when using this product.
P272	Contaminated work clothing should not be allowed out of the workplace.
P273	Avoid release to the environment.
P280	Wear protective gloves/ protective clothing/ eye protection/ face protection.
P281	Use personal protective equipment as required.
P301 + P312 + P330	IF SWALLOWED: Call a POISON CENTER or doctor/ physician if you feel unwell. Rinse mouth.
P301 + P330 + P331	IF SWALLOWED: Rinse mouth. Do NOT induce vomiting.
P303 + P361 + P353	IF ON SKIN (or hair): Remove/ Take off immediately all contaminated clothing. Rinse skin with water/ shower.
P304 + P340 + P310	IF INHALED: Remove victim to fresh air and keep at rest in a position comfortable for breathing. Immediately call a POISON CENTER or doctor/ physician.
P305 + P351 + P338 + P310	IF IN EYES: Rinse cautiously with water for several minutes. Remove contact lenses, if present and easy to do. Continue rinsing. Immediately call a POISON CENTER or doctor/ physician.
P308 + P313	IF exposed or concerned: Get medical advice/ attention.
P333 + P313	If skin irritation or rash occurs: Get medical advice/ attention.
P363	Wash contaminated clothing before reuse.
P391	Collect spillage.
P405	Store locked up.
P501	Dispose of contents/ container to an approved waste disposal plant.

2.3 Hazards not otherwise classified (HNOC) or not covered by GHS - none

3. COMPOSITION/INFORMATION ON INGREDIENTS

3.2 Mixtures

Formula : (C15 H16 O2 . C3 H5 Cl O)x

Hazardous components

Component		Classification	Concentration
Reaction product: bisphenol-A-(epichlorhydrin) and epoxy resin (number average molecular weight <= 700)			
CAS-No. EC-No. Index-No.	25068-38-6 500-033-5 603-074-00-8	Skin Irrit. 2; Eye Irrit. 2A; Skin Sens. 1; Aquatic Acute 2; Aquatic Chronic 2; H315, H317, H319, H411	<= 100 %
Epichlorhydrin			
CAS-No. EC-No. Index-No. Registration number	106-89-8 203-439-8 603-026-00-6 01-2119457436-33-XXXX	Flam. Liq. 3; Acute Tox. 3; Skin Corr. 1B; Eye Dam. 1; Skin Sens. 1; Carc. 1B; Aquatic Acute 3; H226, H301 + H311 + H331, H314, H317, H318, H350, H402	>= 5 - < 10 %

For the full text of the H-Statements mentioned in this Section, see Section 16.

4. FIRST AID MEASURES

4.1 Description of first aid measures

General advice

Consult a physician. Show this safety data sheet to the doctor in attendance.Move out of dangerous area.

If inhaled

If breathed in, move person into fresh air. If not breathing, give artificial respiration. Consult a physician.

In case of skin contact
Take off contaminated clothing and shoes immediately. Wash off with soap and plenty of water. Consult a physician.

In case of eye contact
Rinse thoroughly with plenty of water for at least 15 minutes and consult a physician.Continue rinsing eyes during transport to hospital.

If swallowed
Do NOT induce vomiting. Never give anything by mouth to an unconscious person. Rinse mouth with water. Consult a physician.

4.2 Most important symptoms and effects, both acute and delayed
The most important known symptoms and effects are described in the labelling (see section 2.2) and/or in section 11

4.3 Indication of any immediate medical attention and special treatment needed
No data available

5. FIREFIGHTING MEASURES

5.1 Extinguishing media

Suitable extinguishing media
Use water spray, alcohol-resistant foam, dry chemical or carbon dioxide.

5.2 Special hazards arising from the substance or mixture
No data available

5.3 Advice for firefighters
Wear self-contained breathing apparatus for firefighting if necessary.

5.4 Further information
No data available

6. ACCIDENTAL RELEASE MEASURES

6.1 Personal precautions, protective equipment and emergency procedures
Use personal protective equipment. Avoid dust formation. Avoid breathing vapours, mist or gas. Ensure adequate ventilation. Evacuate personnel to safe areas. Avoid breathing dust.
For personal protection see section 8.

6.2 Environmental precautions
Prevent further leakage or spillage if safe to do so. Do not let product enter drains. Discharge into the environment must be avoided.

6.3 Methods and materials for containment and cleaning up
Pick up and arrange disposal without creating dust. Sweep up and shovel. Keep in suitable, closed containers for disposal.

6.4 Reference to other sections
For disposal see section 13.

7. HANDLING AND STORAGE

7.1 Precautions for safe handling
Avoid contact with skin and eyes. Avoid formation of dust and aerosols.Further processing of solid materials may result in the formation of combustible dusts. The potential for combustible dust formation should be taken into consideration before additional processing occurs.
Provide appropriate exhaust ventilation at places where dust is formed.
For precautions see section 2.2.

7.2 Conditions for safe storage, including any incompatibilities
Keep container tightly closed in a dry and well-ventilated place.
Storage class (TRGS 510): Non-combustible, acute toxic Cat.3 / toxic hazardous materials or hazardous materials causing chronic effects

7.3 Specific end use(s)
Apart from the uses mentioned in section 1.2 no other specific uses are stipulated

8. EXPOSURE CONTROLS/PERSONAL PROTECTION

8.1 Control parameters

Components with workplace control parameters

Component	CAS-No.	Value	Control parameters	Basis
Epichlorhydrin	106-89-8	TWA	0.500000 ppm	USA. ACGIH Threshold Limit Values (TLV)
	Remarks	Upper Respiratory Tract irritation Male reproductive Confirmed animal carcinogen with unknown relevance to humans Danger of cutaneous absorption		
		Potential Occupational Carcinogen See Appendix A		
		TWA	5.000000 ppm 19.000000 mg/m3	USA. Occupational Exposure Limits (OSHA) - Table Z-1 Limits for Air Contaminants
		Skin designation The value in mg/m3 is approximate.		

8.2 Exposure controls

Appropriate engineering controls
Handle in accordance with good industrial hygiene and safety practice. Wash hands before breaks and at the end of workday.

Personal protective equipment

Eye/face protection
Face shield and safety glasses Use equipment for eye protection tested and approved under appropriate government standards such as NIOSH (US) or EN 166(EU).

Skin protection
Handle with gloves. Gloves must be inspected prior to use. Use proper glove removal technique (without touching glove's outer surface) to avoid skin contact with this product. Dispose of contaminated gloves after use in accordance with applicable laws and good laboratory practices. Wash and dry hands.

Body Protection
Complete suit protecting against chemicals, The type of protective equipment must be selected according to the concentration and amount of the dangerous substance at the specific workplace.

Respiratory protection
Where risk assessment shows air-purifying respirators are appropriate use a full-face particle respirator type N100 (US) or type P3 (EN 143) respirator cartridges as a backup to engineering controls. If the respirator is the sole means of protection, use a full-face supplied air respirator. Use respirators and components tested and approved under appropriate government standards such as NIOSH (US) or CEN (EU).

Control of environmental exposure
Prevent further leakage or spillage if safe to do so. Do not let product enter drains. Discharge into the environment must be avoided.

9. PHYSICAL AND CHEMICAL PROPERTIES

9.1 Information on basic physical and chemical properties

a)	Appearance	Form: pellets
b)	Odour	No data available
c)	Odour Threshold	No data available
d)	pH	No data available
e)	Melting point/freezing point	No data available
f)	Initial boiling point and	No data available

	boiling range	
g)	Flash point	No data available
h)	Evaporation rate	No data available
i)	Flammability (solid, gas)	No data available
j)	Upper/lower flammability or explosive limits	No data available
k)	Vapour pressure	No data available
l)	Vapour density	No data available
m)	Relative density	1.18 g/mL at 25 °C (77 °F)
n)	Water solubility	No data available
o)	Partition coefficient: n-octanol/water	No data available
p)	Auto-ignition temperature	No data available
q)	Decomposition temperature	No data available
r)	Viscosity	No data available
s)	Explosive properties	No data available
t)	Oxidizing properties	No data available

9.2 Other safety information
No data available

10. STABILITY AND REACTIVITY

10.1 Reactivity
No data available

10.2 Chemical stability
Stable under recommended storage conditions.

10.3 Possibility of hazardous reactions
No data available

10.4 Conditions to avoid
No data available

10.5 Incompatible materials
No data available

10.6 Hazardous decomposition products
Other decomposition products - No data available
In the event of fire: see section 5

11. TOXICOLOGICAL INFORMATION

11.1 Information on toxicological effects

Acute toxicity
LD50 Oral - Rat - 13,600 mg/kg
Remarks: Behavioral:Somnolence (general depressed activity). Lungs, Thorax, or Respiration:Dyspnea. Nutritional and Gross Metabolic:Weight loss or decreased weight gain.

Inhalation: No data available

Dermal: No data available

Skin corrosion/irritation
No data available

Serious eye damage/eye irritation
No data available

Respiratory or skin sensitisation
Germ cell mutagenicity
No data available

Ames test
Result: positive

Carcinogenicity

IARC:	2A - Group 2A: Probably carcinogenic to humans (Epichlorhydrin)
NTP:	Reasonably anticipated to be a human carcinogen (Epichlorhydrin)
OSHA:	No component of this product present at levels greater than or equal to 0.1% is identified as a carcinogen or potential carcinogen by OSHA.

Reproductive toxicity
No data available

No data available

Specific target organ toxicity - single exposure
No data available

Specific target organ toxicity - repeated exposure
No data available

Aspiration hazard
No data available

Additional Information
RTECS: Not available

Stomach - Irregularities - Based on Human Evidence
Stomach - Irregularities - Based on Human Evidence (Epichlorhydrin)

12. ECOLOGICAL INFORMATION

12.1 Toxicity
No data available

12.2 Persistence and degradability

Biodegradability	Result: - According to the results of tests of biodegradability this product is not readily biodegradable. Remarks: No data available

12.3 Bioaccumulative potential
No data available

12.4 Mobility in soil
No data available

12.5 Results of PBT and vPvB assessment
PBT/vPvB assessment not available as chemical safety assessment not required/not conducted

12.6 Other adverse effects
An environmental hazard cannot be excluded in the event of unprofessional handling or disposal.
Toxic to aquatic life with long lasting effects.

No data available

13. DISPOSAL CONSIDERATIONS

13.1 Waste treatment methods

Product
Offer surplus and non-recyclable solutions to a licensed disposal company. Contact a licensed professional waste disposal service to dispose of this material. Dissolve or mix the material with a combustible solvent and burn in a chemical incinerator equipped with an afterburner and scrubber.

Contaminated packaging
Dispose of as unused product.

14. TRANSPORT INFORMATION

DOT (US)
Not dangerous goods

IMDG
UN number: 3077 Class: 9 Packing group: III EMS-No: F-A, S-F
Proper shipping name: ENVIRONMENTALLY HAZARDOUS SUBSTANCE, SOLID, N.O.S. (Reaction product: bisphenol-A-(epichlorhydrin) and epoxy resin (number average molecular weight <= 700))
Marine pollutant:yes

IATA
UN number: 3077 Class: 9 Packing group: III
Proper shipping name: Environmentally hazardous substance, solid, n.o.s. (Reaction product: bisphenol-A-(epichlorhydrin) and epoxy resin (number average molecular weight <= 700))

Further information
EHS-Mark required (ADR 2.2.9.1.10, IMDG code 2.10.3) for single packagings and combination packagings containing inner packagings with Dangerous Goods > 5L for liquids or > 5kg for solids.

15. REGULATORY INFORMATION

SARA 302 Components
The following components are subject to reporting levels established by SARA Title III, Section 302:

	CAS-No.	Revision Date
Epichlorhydrin	106-89-8	2008-11-03

SARA 313 Components
The following components are subject to reporting levels established by SARA Title III, Section 313:

	CAS-No.	Revision Date
Epichlorhydrin	106-89-8	2008-11-03

SARA 311/312 Hazards
Acute Health Hazard, Chronic Health Hazard

Massachusetts Right To Know Components

	CAS-No.	Revision Date
Epichlorhydrin	106-89-8	2008-11-03

Pennsylvania Right To Know Components

	CAS-No.	Revision Date
Reaction product: bisphenol-A-(epichlorhydrin) and epoxy resin (number average molecular weight <= 700)	25068-38-6	
Epichlorhydrin	106-89-8	2008-11-03

New Jersey Right To Know Components

	CAS-No.	Revision Date
Reaction product: bisphenol-A-(epichlorhydrin) and epoxy resin (number average molecular weight <= 700)	25068-38-6	
Epichlorhydrin	106-89-8	2008-11-03

California Prop. 65 Components

WARNING! This product contains a chemical known to the	CAS-No.	Revision Date

State of California to cause cancer. Epichlorhydrin	106-89-8	2007-09-28

WARNING: This product contains a chemical known to the State of California to cause birth defects or other reproductive harm. Epichlorhydrin	CAS-No. 106-89-8	Revision Date 2007-09-28

16. OTHER INFORMATION

Full text of H-Statements referred to under sections 2 and 3.

Acute Tox.	Acute toxicity
Aquatic Acute	Acute aquatic toxicity
Aquatic Chronic	Chronic aquatic toxicity
Carc.	Carcinogenicity
Eye Dam.	Serious eye damage
Eye Irrit.	Eye irritation
Flam. Liq.	Flammable liquids
H226	Flammable liquid and vapour.
H301 + H311 + H331	Toxic if swallowed, in contact with skin or if inhaled
H302	Harmful if swallowed.
H314	Causes severe skin burns and eye damage.
H315	Causes skin irritation.
H317	May cause an allergic skin reaction.
H318	Causes serious eye damage.
H319	Causes serious eye irritation.
H350	May cause cancer.
H401	Toxic to aquatic life.
H402	Harmful to aquatic life.
H411	Toxic to aquatic life with long lasting effects.
Skin Corr.	Skin corrosion
Skin Irrit.	Skin irritation
Skin Sens.	Skin sensitisation

HMIS Rating

Health hazard:	2
Chronic Health Hazard:	*
Flammability:	0
Physical Hazard	0

NFPA Rating

Health hazard:	3
Fire Hazard:	0
Reactivity Hazard:	0

Further information

Copyright 2015 Sigma-Aldrich Co. LLC. License granted to make unlimited paper copies for internal use only.
The above information is believed to be correct but does not purport to be all inclusive and shall be used only as a guide. The information in this document is based on the present state of our knowledge and is applicable to the product with regard to appropriate safety precautions. It does not represent any guarantee of the properties of the product. Sigma-Aldrich Corporation and its Affiliates shall not be held liable for any damage resulting from handling or from contact with the above product. See www.sigma-aldrich.com and/or the reverse side of invoice or packing slip for additional terms and conditions of sale.

Preparation Information
Sigma-Aldrich Corporation
Product Safety – Americas Region
1-800-521-8956

Version: 3.7 Revision Date: 03/03/2015 Print Date: 07/29/2015

Surftreat

MATERIAL SAFETY DATA SHEET

SURFTREAT 9214 Old code:TC 8522

Substance key: 000000271397
Version : 1 - 2 / USA

Revision Date: 05/15/2007
Date of printing :05/20/2007

Section 01 - Product Information

Identification of the company:

Clariant Corporation
4000 Monroe Road
Charlotte, NC, 28205
Telephone No.: +1 704-331-7000

Information of the substance/preparation:
Functional Chemicals
Product Safety 1-704-331-7710

Emergency tel. number: +1 800-424-9300(CHEMTREC)

Trade name: **SURFTREAT 9214 Old code:TC 8522**

Chemical family: mixture
Primary product use: Additive

Section 02 - Composition information on hazardous ingredients

Hazardous ingredients:

Component	CAS-no. (Trade secret no.)	Concentration
Poly(oxy-1,2-ethanediyl), alpha-(4-nonylphenyl)-omega-hydroxy-, branched	127087-87-0	<= 10 %
2-Propanol	67-63-0	<= 10 %
Quaternary ammonium compounds, bis(hydroxyethyl)methyltallow alkyl, chlorides	67784-77-4	<= 5 %
Quaternary ammonium compounds, C12-18-alkyltrimethyl, chlorides	68391-03-7	<= 5 %
Methanol	67-56-1	<= 5 %

Section 03 - Hazards identification

Expected Route of entry:

Inhalation: Particulates of this material are probably corrosive to respiratory passages, and may cause ulcerations of nose, throat, and larynx.

Skin contact: Corrosive to the skin.
The acute dermal toxicity of this product is greater than 1000 mg/kg. This product is not toxic by skin absorption.

Eye contact: Corrosive to the eye.

Ingestion: This material will probably cause chemical burns of

the mouth , pharynx, esophagus, and stomach in humans following ingestion.
The acute oral toxicity of this material is between 500 and 5000 mg/kg. Relative to other materials, this material is classified as slightly toxic by ingestion.

Skin absorption: yes

Health effects of exposure:

Ethoxylated Nonylphenol: If material is deposited as a liquid directly into the lungs, this substance can cause lung injury. At large, maternally toxic,dosage levels, developmental effects (skeletal variations) were observed in rat fetuses. Significance to humans of these effects is unclear.

Isopropanol (67-63-0)
Isopropanol: Eye (Human) - 20 ppm. Oral LDLo (Human) - 8600 mg/kg. TCL0 (Human) - 400 ppm. Inhalation irritant. Indefinite carcinogenic determination (IARC). Toxicity is low via dermal and moderate via oral and intraperitoneal routes. An eye irritant. Acts as a local irritant and in high concentrations as a narcotic. It can cause corneal burns and often eye damage. Ingestion or inhalation of large quantities of the vapor may cause flushing, headache, dizziness, mental depression, nausea, vomiting, narcosis, anesthesia and coma. 100 ml can be fatal. The following is a summary of TSCA Section 4 Test Rule results: large doses given to pregnant rats and rabbits (> 800 mg/kg/day and 480 mg/kg/day respectively) produced evidence of toxicity in the mothers but little evidence of fetal or embryo toxicity (except for slight decreases in fetal weights in rats). No evidence of teratogenicity was noted in either species.

Methanol (67-56-1)
Methanol: Poisoning is usually caused by ingestion. Poisoning by inhalation of vapors is uncommon but can occur at extreme levels of exposure. Intoxication by skin absorption is unlikely unless prolonged contact occurs with injured skin. Acute systemic toxicity is manifested in acidosis and injury to the optic nerve. Onset of symptoms may be delayed as long as 30 hours. A latent period of 12-18 hours is common. Mild intoxication may be associated with non-specific headache, fatigue, nausea and blurring of vision, usually reversible. Moderate intoxication may produce severe headache, dizziness, nausea, vomiting, abdominal or lumbar pain and depression of the central nervous system. Blurring or loss of vision may be temporary to permanent and generally follows latent periods of two to six days. In severe intoxication, these findings are accentuated and there may be shock, coma and hyperemia of the optic disc with blurring of the disc margins. Acidosis is a prominent observation. Death has been reported in about 25% of patients with severe poisoning (carbon dioxide combining power less than 20 meg/l). Visual disturbances, the most damaging aspect of most cases of intoxication, may develop promptly with little warning. The loss of acuity may be accompanied by the perception of spots or a grey mist. Changes in color perception, scotomatia, photophobia or tenderness of the eyes. Prognosis for improvement of vision is poor if changes persist for 6 days. Chronic poisoning from inhalation has been described as showing visual impairment with blurring, loss of acuity, contraction of fields and sometimes total blindness. This condition is believed to be exceedingly rare and not well documented. Liquid and vapors may be irritating to the skin and mucous membranes. May have a defatting action upon the skin and dryness and vulnerability to infection may result.

Known effects on other illnesses: None known.
Listed carcinogen: IARC: NO NTP: NO OSHA: NO

HMIS:

Health: 3* Flammability: 2 Reactivity: 0 Personal protection: D

Section 04 - First aid measures

After inhalation:
Get victim to fresh air. Give artificial respiration or oxygen if breathing has stopped. Get prompt medical attention. Do not give fluids if victim is unconscious.

After contact with skin:
In case of contact, immediately wash with soap and water for at least 15 minutes. Remove contaminated clothing and shoes while washing. Isolate contaminated clothing for cleaning or disposal. Do not reuse unless thoroughly cleaned. Dispose of contaminated leatherwear. Get immediate medical attention.

After contact with eyes:
Flush thoroughly with water for 15 minutes. Get immediate medical help.

After ingestion:
Seek medical attention immediately.
Do not induce vomiting.

Advice to doctor / Treatment:
Corrosive. May cause stricture. If lavage is performed, suggest endotracheal and/or esophagoscopic control. If burn is present, treat as any thermal burn, after decontamination. No specific antidote. Supportive care. Treatment based on judgement of the physician in response to reactions of the patient.

Section 05 - Fire fighting measures

Flashpoint: 105 °F
Method: PENSKY-MARTENS (closed cup)

Lower explosion limit: 2 %(V)
Data relate to solvent

Upper explosion limit: 12 %(V)
Data relate to solvent

Self ignition: > 797 °F
Information applies to the solvent.

Ignition temperature:

Hazardous combustion products:
In the event of fire the following can be released:
Carbon monoxide (CO)
Carbon dioxide (CO_2)

Extinguishing media: Carbon dioxide, water spray, dry chemical, alcohol resistant foam.
cool containers by spraying with water

Special fire fighting procedure:

Wear positive pressure self-contained breathing apparatus and full protective gear. Do not direct a solid stream of water or foam into hot burning pools; this may spread fire, cause frothing, and increase fire intensity. Containers can build up pressure if exposed to heat and/or fire. Vapors may form an explosive mixture with air. Vapors may travel to source of ignition and flash back. Vapors are heavier than air and will spread along ground and collect in low or confined areas. Use water spray to keep containers cool.

Unusual fire and explosion hazards: Emits toxic and corrosive fumes under fire conditions. Containers exposed to intense heat from fires should be cooled with water to prevent vapor pressure buildup which could result in container rupture. Container areas exposed to direct flame contact should be cooled with large quantities of water as needed to prevent weakening of container structure.

Section 06 - Accidental release measures

Steps to be taken in case of spill or leak:

Remove all spark producing devices or ignition sources. Wear proper personnel protective equipment. Using non-sparking tools collect as a liquid for recycling/disposal or absorb onto a suitable absorbant and secure in a suitable container. Collect any contaminated soils or cleaning waste in a suitable container for proper disposal.
Absorbent materials such as dry sand, absorbent booms, and vermiculite may be used to keep material from entering drains, sewers, or streams.

Section 07 - Handling and storage

Advice on safe handling:

Keep away from heat, sparks and open flames. - Avoid breathing vapors or contact with skin, eyes, and clothing.- Use only with adequate ventilation and proper protective eyewear, face shield, gloves and clothing. Wash thoroughly after handling. Keep container closed.
Prevent a possible fire hazard by bonding and grounding or inert gas purge.
Store in a cool, dry, well-ventilated, fire-resistant location. Avoid storage on wood floors.

Further info on storage conditions:

Store in a cool, dry location away from heat, sparks and open flames.
Store in original container. Keep tightly sealed.

Section 08 - Exposure controls / personal protection

Occupational exposure limits:

Component	CAS number:	Regulatory list	Type of value	Values / Remarks
ISOPROPANOL	67-63-0	US ACGIH Threshold Limit Values Data	Time Weighted Average (TWA):	200 ppm
ISOPROPANOL	67-63-0	US ACGIH Threshold Limit Values Data	Short Term Exposure Limit (STEL):	400 ppm
METHANOL	67-56-1	US ACGIH Threshold Limit	Time Weighted Average (TWA):	200 ppm

		Values Data		
METHANOL	67-56-1	US ACGIH Threshold Limit Values Data	Short Term Exposure Limit (STEL):	250 ppm
METHANOL	67-56-1	US ACGIH Threshold Limit Values Data	Skin designation:	Can be absorbed through the skin.

Respiratory protection: If airborne concentrations pose a health hazard, become irritating, or exceed recommended limits, use a NIOSH approved respirator in accordance with OSHA respiratory protection requirements under 29CFR1910.134.

Hand protection: Chemical resistant gloves (butyl rubber, nitrile rubber, polyvinyl alcohol). However, please note that PVA degrades in water.

Eye protection: Chemical splash goggles and full face shield.

Other protective equipment: Clothing suitable to prevent skin contact.

Advice on system design: Local ventilation recommended - mechanical ventilation may be used.

IDLH:

Component	CAS-no. (Trade secret no.)	Value
ISOPROPYL ALCOHOL	67-63-0	2,000 ppm
METHYL ALCOHOL	67-56-1	6,000 ppm

Section 09 - Physical and chemical properties

Form: Liquid

Color: amber

pH: 6.5

Solubility in water: soluble

Density: 1 g/cm3

Boiling point : 180 °F
Information applies to the solvent.

Partitioning coef. octanol/water: 1 - 3

Section 10 - Stability and reactivity

Chemical stability: Stable.

Hazardous Polymerization: Will not occur.

Conditions to avoid: Keep away from heat, sparks, open flames, and other sources of ignition.

Section 11 - Toxicological information

Product information:

Acute oral toxicity: LD50 > 1,300 mg/kg (rat)
The product has not been tested. The information is derived from the properties of the individual components.

Acute dermal toxicity: LD50 > 2,000 mg/kg (rabbit)
The product has not been tested. The information is derived from the properties of the individual components.

Skin irritation: corrosive
The product has not been tested. The information is derived from the properties of the individual components.

Eye irritation: corrosive
The product has not been tested. The information is derived from the properties of the individual components.

Section 12 - Ecological information

Product information:

Fish toxicity: LC50 1 - 10 mg/l (96 h, Fish general (Pisces))
The product has not been tested. The information is derived from the properties of the individual components.

Section 13 - Disposal considerations

Waste disposal information:
Recommended disposal is by incineration in approved facilities.

Section 14 - Transport information

DOT Regulation:

Proper shipping name:	Corrosive liquids, flammable, n.o.s.
Hazard class:	8
Packing group:	II
UN/NA-number:	UN 2920
Primary hazard class:	8
Subsidiary hazard class:	3
Technical Name:	QUATERNARY AMMONIUM COMPOUND
Emergency Response Guide:	132
Reportable Quantity:	149,522.000 kg Methanol 0.000 kg

IATA

Proper shipping name:	Corrosive liquid, flammable, n.o.s.
Class:	8
Packing group:	II
UN/ID number:	UN 2920

Primary risk:	8
Subsidiary risk:	3
Remarks:	Shipment permitted
Hazard inducer(s):	QUATERNARY AMMONIUM COMPOUND Methanol

IMDG

Proper shipping name:	Corrosive liquid, flammable, n.o.s.
Class:	8
Packing group:	II
UN no.:	UN 2920
Primary risk:	8
Subsidiary risk:	3
Hazard inducer(s):	QUATERNARY AMMONIUM COMPOUND Methanol
EmS:	F-E S-C

Section 15 - Regulatory information

TSCA Status:

All components of this product are listed on the TSCA Inventory.

SARA (section 311/312):

Reactive hazard:	no
Pressure hazard:	no
Fire hazard:	yes
Immediate/acute:	yes
Delayed/chronic:	yes

SARA 313 information:

This product contains the chemical or chemicals listed below which are subject to the supplier notification requirements of Section 313 of the Superfund Amendments and Reauthorization Act of 1986 ("SARA") and the requirements of 40 CFR Part 372:

Component	CAS-no. (Trade secret no.)	Concentration
2-Propanol	67-63-0	<= 10 %
Methanol	67-56-1	<= 5 %

Clean Water Act:

This product is not a Clean Water Act priority pollutant.

Volatile organic compounds VOC:

Remarks: Not Available

CERCLA information:

Component	CAS-no. (Trade secret no.)	Percentage	RQ
RCRA HAZARDOUS WASTE NO. D001UNLISTED HAZARDOUS WASTES CHARACTERISTIC OF IGNITABILITY	67-63-0	<= 10 %	100 LBS
METHANOLMETHYL ALCOHOL	67-56-1	<= 5 %	5,000 LBS

Section 16 - Other information

Other precautions:

Observe all necessary precautions for handling combustible liquids.

Label information:

DANGER!

May cause burns to skin and eyes. This substance may be toxic to fish or aquatic organisms. COMBUSTIBLE LIQUID AND VAPOR

Avoid breathing fumes, vapors, mists, or spray. Avoid contact with skin, eyes and clothing. Do not swallow. Use with adequate ventilation and/or approved respiratory protection. Wear proper protective equipment. Wash thoroughly after handling. Keep container closed when not in use.

Skin contact: wash thoroughly with soap and water. Remove contaminated clothing and shoes. Seek medical attention. Wash clothing before reuse. Eye contact: flush with water for at least 15 minutes while holding eyelids open. Seek immediate medical attention. Ingestion: do not induce vomiting. Seek immediate medical assistance. Inhalation: remove to fresh air. If not breathing, give artificial respiration. If breathing is difficult, give oxygen. Seek medical attention if respiratory irritation continues.

NFPA:

Health: 3 Flammability: 2 Reactivity: 1

This information is supplied under the OSHA Hazard Communication Standard, 29 CFR 1910.1200, and is offered in good faith based on data available to us that we believe to be true and accurate. The recommended industrial hygiene and safe handling procedures are believed to be generally applicable to the material. However, each user should review these recommendations in the specific context of the intended use and determine whether they are appropriate for that use. No warranty, express or implied, is made regarding the accuracy of this data, the hazards connected with the use of the material, or the results to be obtained from the use thereof. We assume no responsibility for damage or injury from the use of the product described herein. Data provided here are typical and not intended for use as product specifications. (R) and TM indicate trademarks of Clariant AG, its business partners or suppliers.

Interseal 670

Safety Data Sheet
INTERSEAL 670HS PART B

	Sales Order: {SalesOrd}
Bulk Sales Reference No.:	EGA247
SDS Revision Date:	11/13/2015
SDS Revision Number:	A1-4

International.

1. Identification of the preparation and company

1.1. Product identifier

Product Identity	INTERSEAL 670HS PART B
Bulk Sales Reference No.	EGA247

1.2. Relevant identified uses of the substance or mixture and uses advised against

Intended Use	See Technical Data Sheet.
Application Method	See Technical Data Sheet.

1.3. Details of the supplier of the safety data sheet

Company Name	International Paint LLC 6001 Antoine Drive Houston Texas 77091

Emergency	
CHEMTREC (USA)	(800) 424-9300
International Paint	(713) 682-1711
Poison Control Center	(800) 854-6813
Customer Service	
International Paint	(800) 589-1267
Fax No.	(800) 631-7481

2. Hazard identification of the product

2.1. Classification of the substance or mixture

Flam. Liq. 3;H226	Flammable liquid and vapor.
Acute Tox. 5;H313	May be harmful in contact with skin.
Skin Corr. 1;H314	Causes severe skin burns and eye damage.
Eye Dam. 1;H318	Causes serious eye damage.
Skin Sens. 1;H317	May cause an allergic skin reaction.
Aquatic Acute 2;H401	Toxic to aquatic life.
Aquatic Chronic 3;H412	Harmful to aquatic life with long lasting effects.

2.2. Label elements

Using the Toxicity Data listed in section 11 & 12 the product is labelled as follows.

Danger.

H226 Flammable liquid and vapor.
H313 May be harmful in contact with skin.
H314 Causes severe skin burns and eye damage.
H317 May cause an allergic skin reaction.

H318 Causes serious eye damage.
H401 Toxic to aquatic life.
H412 Harmful to aquatic life with long lasting effects.

P210 Keep away from heat / sparks / open flames / hot surfaces - No smoking.
P260 Do not breathe mist / vapors / spray.
P272 Contaminated work clothing should not be allowed out of the workplace.
P273 Avoid release to the environment.
P280 Wear protective gloves / eye protection / face protection.
P301+330+331 IF SWALLOWED: Rinse mouth. Do NOT induce vomiting.
P302+352 IF ON SKIN: Wash with soap and water.
P303+361+353 IF ON SKIN (or hair): Remove/Take off immediately all contaminated clothing. Rinse skin with water/shower.
P304+312 IF INHALED: Call a POISON CENTER or doctor/physician if you feel unwell.
P305+351+338 IF IN EYES: Rinse continuously with water for several minutes. Remove contact lenses if present and easy to do - continue rinsing.
P310 Immediately call a POISON CENTER or doctor / physician.
P312 Call a POISON CENTER or doctor / physician if you feel unwell.
P333+313 If skin irritation or a rash occurs: Get medical advice/attention.
P340 Remove victim to fresh air and keep at rest in a position comfortable for breathing.
P363 Wash contaminated clothing before reuse.
P370 In case of fire: Use water spray, fog, or regular foam..
P403+233 Store in a well ventilated place. Keep container tightly closed.
P405 Store locked up.
P501 Dispose of contents / container in accordance with local / national regulations.

HMIS Rating Health: 3* Flammability: 2 Reactivity: 0

3. Composition/information on ingredients

This product contains the following substances that present a hazard within the meaning of the relevant State and Federal Hazardous Substances regulations.

Ingredient/Chemical Designations	Weight %	GHS Classification	Notes
Benzyl alcohol CAS Number: 0000100-51-6	10 - 25	Acute Tox. 4;H332 Acute Tox. 4;H302	[1]
AMINOPROPYLMORPHOLINE CAS Number: 0000123-00-2	10 - 25	Acute Tox. 4;H312 Skin Corr. 1;H314	[1]
Xylenes (o-, m-, p- isomers) CAS Number: 0001330-20-7	10 - 25	Flam. Liq. 3;H226 Acute Tox. 4;H332 Acute Tox. 4;H312 Skin Irrit. 2;H315 Eye Irrit. 2;H319 STOT SE 3;H335 Asp. Tox. 1;H304	[1][2]
Tetraethylenepentamine CAS Number: 0000112-57-2	1.0 - 10	Acute Tox. 4;H312 Acute Tox. 4;H302 Skin Corr. 1B;H314 Skin Sens. 1;H317 Aquatic Chronic 2;H411	[1]

[1] Substance classified with a health or environmental hazard.
[2] Substance with a workplace exposure limit.
[3] PBT-substance or vPvB-substance.

*The full texts of the phrases are shown in Section 16.

4. First aid measures

4.1. Description of first aid measures

General Remove contaminated clothing and shoes. Get medical attention immediately. Wash clothing before reuse. Thoroughly clean or destroy contaminated shoes.

Inhalation	If inhaled, remove to fresh air. If not breathing, give artificial respiration. If breathing is difficult, give oxygen. Get medical attention immediately.
Eyes	In case of contact, immediately flush eyes with plenty of water for at least 15 minutes. Get medical attention immediately.
Skin	In case of contact, immediately flush skin with soap and plenty of water. Get medical attention immediately.
Ingestion	If swallowed, immediately contact Poison Control Center at 1-800-854-6813. DO NOT induce vomiting unless instructed to do so by medical personnel. Never give anything by mouth to an unconscious person.

4.2. Most important symptoms and effects, both acute and delayed

Overview	NOTICE: Reports have associated repeated and prolonged occupational overexposure to solvents with permanent brain and nervous system damage. Intentional misuse by deliberately concentrating and inhaling the contents may be harmful or fatal. Avoid contact with eyes, skin and clothing.
Inhalation	Harmful if inhaled. Causes nose and throat irritation. Vapors may affect the brain or nervous system causing dizziness, headache or nausea.
Eyes	Causes severe eye irritation. Avoid contact with eyes.
Skin	Causes skin irritation. May cause allergic skin reaction. May be harmful if absorbed through the skin.
Ingestion	Harmful if swallowed. May cause abdominal pain, nausea, vomiting, diarrhea, or drowsiness.

Chronic effects

5. Fire-fighting measures

5.1. Extinguishing media

CAUTION: This product has a very low flashpoint. Use of water spray when fighting fire may be inefficient. SMALL FIRES: Use dry chemical, CO_2, water spray or alcohol-resistant foam. LARGE FIRES: Use water spray, fog, or alcohol-resistant foam. Do not use straight streams. Move containers from fire area if you can do so without risk. Runoff from fire control may cause pollution. Dike fire control water for later disposal. Do not scatter the material.

5.2. Special hazards arising from the substance or mixture

May produce hazardous fumes when heated to decomposition as in welding. Fumes may produce Carbon Dioxide and Carbon Monoxide.

5.3. Advice for fire-fighters

Cool closed containers exposed to fire by spraying them with water. Do not allow run off water and contaminants from fire fighting to enter drains or water courses.

ERG Guide No.

6. Accidental release measures

6.1. Personal precautions, protective equipment and emergency procedures

ELIMINATE ALL IGNITION SOURCES (no smoking, flares, sparks or flames in immediate area). Use only non-sparking equipment to handle spilled material and absorbent. Do not touch or walk through spilled material. Stop leak if you can do so without risk. Prevent entry into waterways, sewers, basements or confined areas. A vapor suppressing foam may be used to reduce vapors. Absorb or cover with dry earth, sand, or other non-combustible material and transfer to containers. Use non-sparking tools to collect absorbed material.

6.2. Environmental precautions

Do not allow spills to enter drains or watercourses.

6.3. Methods and material for containment and cleaning up

CALL CHEMTREC at (800)-424-9300 for emergency response. Isolate spill or leak area immediately for at least 25 to 50 meters (80 to 160 feet) in all directions. Keep unauthorized personnel away. Stay upwind. Keep out of low areas. Ventilate closed spaces before entering. LARGE SPILLS: Consider initial downwind evacuation for at least 300 meters (1000 feet).

7. Handling and storage

7.1. Precautions for safe handling

Handling

Vapors may cause flash fire or ignite explosively.

In Storage
Keep away from heat, sparks and flame.

7.2. Conditions for safe storage, including any incompatibilities
Store between 40-100F (4-38C).
Do not get in eyes, on skin or clothing.
Strong oxidizing agents.
Do not smoke. Extinguish all flames and pilot lights, and turn off stoves, heaters, electric motors and other sources of ignition during use and until all vapors are gone.

7.3. Specific end use(s)
Close container after each use.
Wash thoroughly after handling.
Prevent build-up of vapors by opening all windows and doors to achieve cross-ventilation.

8. Exposure controls and personal protection

8.1. Control parameters

Exposure

CAS No.	Ingredient	Source	Value
0000100-51-6	Benzyl alcohol	OSHA	
		ACGIH	
		NIOSH	
		Supplier	
		OHSA, CAN	
		Mexico	
		Brazil	
0000112-57-2	Tetraethylenepentamine	OSHA	
		ACGIH	
		NIOSH	
		Supplier	
		OHSA, CAN	
		Mexico	
		Brazil	
0000123-00-2	AMINOPROPYLMORPHOLINE	OSHA	
		ACGIH	
		NIOSH	
		Supplier	
		OHSA, CAN	
		Mexico	
		Brazil	
0001330-20-7	Xylenes (o-, m-, p- isomers)	OSHA	100 ppm TWA; 435 mg/m3 TWA150 ppm STEL; 655 mg/m3 STEL
		ACGIH	100 ppm TWA150 ppm STEL
		NIOSH	
		Supplier	
		OHSA, CAN	100 ppm TWA150 ppm STEL
		Mexico	100 ppm TWA LMPE-PPT; 435 mg/m3 TWA LMPE-PPT150 ppm STEL [LMPE-CT]; 655 mg/m3 STEL [LMPE-CT]
		Brazil	78 ppm TWA LT; 340 mg/m3 TWA LT

Health Data

CAS No.	Ingredient	Source	Value

0000100-51-6	Benzyl alcohol	NIOSH	
0000112-57-2	Tetraethylenepentamine	NIOSH	
0000123-00-2	AMINOPROPYLMORPHOLINE	NIOSH	
0001330-20-7	Xylenes (o-, m-, p- isomers)	NIOSH	Central nervous system depressant; respiratory and eye irritation

Carcinogen Data

CAS No.	Ingredient	Source	Value
0000100-51-6	Benzyl alcohol	OSHA	Select Carcinogen: No
		NTP	Known: No; Suspected: No
		IARC	Group 1: No; Group 2a: No; Group 2b: No; Group 3: No; Group 4: No;
0000112-57-2	Tetraethylenepentamine	OSHA	Select Carcinogen: No
		NTP	Known: No; Suspected: No
		IARC	Group 1: No; Group 2a: No; Group 2b: No; Group 3: No; Group 4: No;
0000123-00-2	AMINOPROPYLMORPHOLINE	OSHA	Select Carcinogen: No
		NTP	Known: No; Suspected: No
		IARC	Group 1: No; Group 2a: No; Group 2b: No; Group 3: No; Group 4: No;
0001330-20-7	Xylenes (o-, m-, p- isomers)	OSHA	Select Carcinogen: No
		NTP	Known: No; Suspected: No
		IARC	Group 1: No; Group 2a: No; Group 2b: No; Group 3: Yes; Group 4: No;

8.2. Exposure controls

Respiratory	Select equipment to provide protection from the ingredients listed in Section 3 of this document. Ensure fresh air entry during application and drying. If you experience eye watering, headache or dizziness or if air monitoring demonstrates dust, vapor, or mist levels are above applicable limits, wear an appropriate, properly fitted respirator (NIOSH approved) during and after application. Follow respirator manufacturer's directions for respirator use. FOR USERS OF 3M RESPIRATORY PROTECTION ONLY: For information and assistance on 3M occupational health and safety products, call OH&ESD Technical Service toll free in U.S.A. 1-800-243-4630, in Canada call 1-800-267-4414. Please do not contact these numbers regarding other manufacturer's respiratory protection products. 3M does not endorse the accuracy of the information contained in this Material Safety Data Sheet.
Eyes	Avoid contact with eyes. Protective equipment should be selected to provide protection from exposure to the chemicals listed in Section 3 of this document. Depending on the site-specific conditions of use, safety glasses, chemical goggles, and/or head and face protection may be required to prevent contact. The equipment must be thoroughly cleaned, or discarded after each use.
Skin	Protective equipment should be selected to provide protection from exposure to the chemicals listed in Section 3 of this document. Depending on the site-specific conditions of use, protective gloves, apron, boots, head and face protection may be required to prevent contact. The equipment must be thoroughly cleaned, or discarded after each use.
Engineering Controls	Depending on the site-specific conditions of use, provide adequate ventilation.
Other Work Practices	Emergency eye wash fountains and safety showers should be available in the immediate vicinity of any potential exposure. Use good personal hygiene practices. Wash hands before eating, drinking, using toilet facilities, etc. Promptly remove soiled clothing and wash clothing thoroughly before reuse. Shower after work using plenty of soap and water.

9. Physical and chemical properties

Appearance	Coloured Liquid
Odour threshold	Not Measured
pH	No Established Limit
Melting point / freezing point	Not Measured
Initial boiling point and boiling range	137 (°C) 279 (°F)
Flash Point	56 (°C) 133 (°F)

Evaporation rate (Ether = 1)	Not Measured
Flammability (solid, gas)	Not Applicable
Upper/lower flammability or explosive limits	Lower Explosive Limit: 1
	Upper Explosive Limit: No Established Limit
vapor pressure (Pa)	Not Measured
Vapor Density	Heavier than air
Specific Gravity	0.98
Solubility in Water	Not Measured
Partition coefficient n-octanol/water (Log Kow)	Not Measured
Auto-ignition temperature	Not Measured
Decomposition temperature	Not Measured
Viscosity (cSt)	No Established Limit Not Measured
VOC %	Refer to the Technical Data Sheet or label where information is available.

10. Stability and reactivity

10.1. Reactivity

No data available

10.2. Chemical stability

This product is stable and hazardous polymerization will not occur. Not sensitive to mechanical impact. Excessive heat and fumes generation can occur if improperly handled.

10.3. Possibility of hazardous reactions

No data available

10.4. Conditions to avoid

No data available

10.5. Incompatible materials

Strong oxidizing agents.

10.6. Hazardous decomposition products

May produce hazardous fumes when heated to decomposition as in welding. Fumes may produce Carbon Dioxide and Carbon Monoxide.

11. Toxicological information

Acute toxicity

NOTICE: Reports have associated repeated and prolonged occupational overexposure to solvents with permanent brain and nervous system damage. Intentional misuse by deliberately concentrating and inhaling the contents may be harmful or fatal.

Ingredient	Oral LD50, mg/kg	Skin LD50, mg/kg	Inhalation Vapor LD50, mg/L/4hr	Inhalation Dust/Mist LD50, mg/L/4hr
Benzyl alcohol - (100-51-6)	1,230.00, Rat - Category: 4	2,000.00, Rabbit - Category: 4	No data available	4.178, Rat - Category: 4
AMINOPROPYLMORPHOLINE - (123-00-2)	3,560.00, Rat - Category: 5	1,214.00, Rabbit - Category: 4	No data available	No data available
Xylenes (o-, m-, p- isomers) - (1330-20-7)	4,299.00, Rat - Category: 5	1,548.00, Rabbit - Category: 4	20.00, Rat - Category: 4	No data available
Tetraethylenepentamine - (112-57-2)	2,140.00, Rat - Category: 5	No data available	No data available	No data available

Item	Category	Hazard
Acute Toxicity (mouth)	Not Classified	Not Applicable
Acute Toxicity (skin)	5	May be harmful in contact with skin.

Acute Toxicity (inhalation)	Not Classified	Not Applicable
Skin corrosion/irritation	1	Causes severe skin burns and eye damage.
Eye damage/irritation	1	Causes serious eye damage.
Sensitization (respiratory)	Not Classified	Not Applicable
Sensitization (skin)	1	May cause an allergic skin reaction.
Germ toxicity	Not Classified	Not Applicable
Carcinogenicity	Not Classified	Not Applicable
Reproductive Toxicity	Not Classified	Not Applicable
Specific target organ systemic toxicity (single exposure)	Not Classified	Not Applicable
Specific target organ systemic Toxicity (repeated exposure)	Not Classified	Not Applicable
Aspiration hazard	Not Classified	Not Applicable

12. Ecological information

12.1. Toxicity

No additional information provided for this product. See Section 3 for chemical specific data.

Aquatic Ecotoxicity

Ingredient	96 hr LC50 fish, mg/l	48 hr EC50 crustacea, mg/l	ErC50 algae, mg/l
Benzyl alcohol - (100-51-6)	10.00, Lepomis macrochirus	55.00, Daphnia magna	700.00 (72 hr), Algae
AMINOPROPYLMORPHOLINE - (123-00-2)	Not Available	Not Available	Not Available
Xylenes (o-, m-, p- isomers) - (1330-20-7)	3.30, Oncorhynchus mykiss	8.50, Palaemonetes pugio	100.00 (72 hr), Chlorococcales
Tetraethylenepentamine - (112-57-2)	420.00, Poecilia reticulata	24.00, Daphnia magna	2.00 (72 hr), Pseudokirchneriella subcapitata

12.2. Persistence and degradability

No data available

12.3. Bioaccumulative potential

Not Measured

12.4. Mobility in soil

No data available

12.5. Results of PBT and vPvB assessment

This product contains no PBT/vPvB chemicals.

12.6. Other adverse effects

No data available

13. Disposal considerations

13.1. Waste treatment methods

Do not allow spills to enter drains or watercourses.

Dispose of in accordance with local, state and federal regulations. (Also reference RCRA information in Section 15 if listed).

14. Transport information

14.1. UN number UN3470

14.2. UN proper shipping name PAINT RELATED MATERIAL, CORROSIVE, FLAMMABLE

14.3. Transport hazard class(es)

DOT (Domestic Surface Transportation)		IMO / IMDG (Ocean Transportation)	
DOT Proper Shipping Name	PAINT RELATED MATERIAL, CORROSIVE, FLAMMABLE	IMDG Proper Shipping Name	PAINT RELATED MATERIAL, CORROSIVE, FLAMMABLE
DOT Hazard Class	8 (3)	IMDG Hazard Class Sub Class	8 (3) Not applicable
UN / NA Number	UN3470		
DOT Packing Group	II	IMDG Packing Group	II
CERCLA/DOT RQ	122 gal. / 1000 lbs.	System Reference Code	1121

14.4. Packing group II

14.5. Environmental hazards

IMDG Marine Pollutant: No

14.6. Special precautions for user

Not Applicable

14.7. Transport in bulk according to Annex II of MARPOL73/78 and the IBC Code

Not Applicable

15. Regulatory information

Regulatory Overview The regulatory data in Section 15 is not intended to be all-inclusive, only selected regulations are represented. All ingredients of this product are listed on the TSCA (Toxic Substance Control Act) Inventory or are not required to be listed on the TSCA Inventory.

WHMIS Classification B3 D2B E

DOT Marine Pollutants (10%):
(No Product Ingredients Listed)

DOT Severe Marine Pollutants (1%):
(No Product Ingredients Listed)

EPCRA 311/312 Chemicals and RQs (>.1%) :

Xylenes (o-, m-, p- isomers) (100 lb final RQ; 45.4 kg final RQ)

EPCRA 302 Extremely Hazardous (>.1%) :
(No Product Ingredients Listed)

EPCRA 313 Toxic Chemicals (>.1%) :

Xylenes (o-, m-, p- isomers)

Mass RTK Substances (>1%) :

AMINOPROPYLMORPHOLINE

Benzyl alcohol

Tetraethylenepentamine

Xylenes (o-, m-, p- isomers)

Penn RTK Substances (>1%) :

AMINOPROPYLMORPHOLINE

Benzyl alcohol

Tetraethylenepentamine

Xylenes (o-, m-, p- isomers)

Penn Special Hazardous Substances (>.01%) :
(No Product Ingredients Listed)

RCRA Status:
(No Product Ingredients Listed)

N.J. RTK Substances (>1%) :

AMINOPROPYLMORPHOLINE

Tetraethylenepentamine

Xylenes (o-, m-, p- isomers)

N.J. Special Hazardous Substances (>.01%) :

AMINOPROPYLMORPHOLINE

Tetraethylenepentamine

Xylenes (o-, m-, p- isomers)

N.J. Env. Hazardous Substances (>.1%) :

Xylenes (o-, m-, p- isomers)

Proposition 65 - Carcinogens (>0%):
(No Product Ingredients Listed)

Proposition 65 - Female Repro Toxins (>0%):
(No Product Ingredients Listed)

Proposition 65 - Male Repro Toxins (>0%):
(No Product Ingredients Listed)

Proposition 65 - Developmental Toxins (>0%):
(No Product Ingredients Listed)

16. Other information

The information and recommendations contained herein are based upon data believed to be correct. However, no guarantee or warranty of any kind, expressed or implied, is made with respect to the information contained herein. We accept no responsibility and disclaim all liability for any harmful effects which may be caused by exposure to our products. Customers/users of this product must comply with all applicable health and safety laws, regulations, and orders.

The full text of the phrases appearing in section 3 is:

H226 Flammable liquid and vapor.

H302 Harmful if swallowed.

H312 Harmful in contact with skin.

H314 Causes severe skin burns and eye damage.

H315 Causes skin irritation.

H317 May cause an allergic skin reaction.

H319 Causes serious eye irritation.

H332 Harmful if inhaled.

H336 May cause drowsiness or dizziness.

H372 Causes damage to organs through prolonged or repeated exposure.

H411 Toxic to aquatic life with long lasting effects.

The following sections have changed since the previous revision.

End of Document

Material Safety Data Sheet
INTERSEAL 670HS BUFF PART A

	Sales Order: {SalesOrd}
Bulk Sales Reference No.:	EGA093
MSDS Revision Date:	09/28/2013
MSDS Revision Number:	B9-2

International.

1. Identification of the preparation and company

1.1. Product identifier

Product Identity	INTERSEAL 670HS BUFF PART A
Bulk Sales Reference No.	EGA093

1.2. Relevant identified uses of the substance or mixture and uses advised against

Intended Use	See Technical Data Sheet.
Application Method	See Technical Data Sheet.

1.3. Details of the supplier of the safety data sheet

Company Name	International Paint LLC 6001 Antoine Drive Houston Texas 77091

Emergency	
CHEMTREC (USA)	(800) 424-9300
International Paint	(713) 682-1711
Poison Control Center	(800) 854-6813
Customer Service	
International Paint	(800) 589-1267
Fax No.	(800) 631-7481

2. Hazard identification of the product

2.1. Classification of the substance or mixture

Flam. Liq. 3;H226	Flammable liquid and vapor.
Acute Tox. 5;H313	May be harmful in contact with skin.
Skin Irrit. 2;H315	Causes skin irritation.
Eye Irrit. 2;H319	Causes serious eye irritation.
Skin Sens. 1;H317	May cause an allergic skin reaction.
Aquatic Acute 2;H401	Toxic to aquatic life.
Aquatic Chronic 3;H412	Harmful to aquatic life with long lasting effects.

2.2. Label elements

Using the Toxicity Data listed in section 11 & 12 the product is labelled as follows.

Warning.

H226 Flammable liquid and vapor.
H313 May be harmful in contact with skin.
H315 Causes skin irritation.
H317 May cause an allergic skin reaction.

H319 Causes serious eye irritation.
H401 Toxic to aquatic life.
H412 Harmful to aquatic life with long lasting effects.

P210 Keep away from heat / sparks / open flames / hot surfaces - No smoking.
P261 Avoid breathing dust / fume / gas / mist / vapors / spray.
P272 Contaminated work clothing should not be allowed out of the workplace.
P273 Avoid release to the environment.
P280 Wear protective gloves / eye protection / face protection.
P302+352 IF ON SKIN: Wash with soap and water.
P303+361+353 IF ON SKIN (or hair): Remove/Take off immediately all contaminated clothing. Rinse skin with water/shower.
P305+351+338 IF IN EYES: Rinse continuously with water for several minutes. Remove contact lenses if present and easy to do - continue rinsing.
P312 Call a POISON CENTER or doctor / physician if you feel unwell.
P333+313 If skin irritation or a rash occurs: Get medical advice/attention.
P337 If eye irritation persists:.
P362 Take off contaminated clothing and wash before reuse.
P363 Wash contaminated clothing before reuse.
P370 In case of fire: Use water spray, fog, or regular foam..
P403+233 Store in a well ventilated place. Keep container tightly closed.
P501 Dispose of contents / container in accordance with local / national regulations.

HMIS Rating Health: 2* Flammability: 3 Reactivity: 0

3. Composition/information on ingredients

This product contains the following substances that present a hazard within the meaning of the relevant State and Federal Hazardous Substances regulations.

Ingredient/Chemical Designations	Weight %	GHS Classification	Notes
Talc CAS Number: 0014807-96-6	25 - 50	----	[1][2]
Bisphenol A - Epichlorohydrin CAS Number: 0025068-38-6	10 - 25	Eye Irrit. 2;H319 Skin Irrit. 2;H315 Skin Sens. 1;H317 Aquatic Chronic 2;H411	[1]
Xylenes (o-, m-, p- isomers) CAS Number: 0001330-20-7	1.0 - 10	Flam. Liq. 3;H226 Acute Tox. 4;H332 Acute Tox. 4;H312 Skin Irrit. 2;H315	[1][2]
Titanium dioxide CAS Number: 0013463-67-7	1.0 - 10	----	[1][2]
Polymer of epoxy resin and bisphenol A CAS Number: 0025036-25-3	1.0 - 10	Eye Irrit. 2;H319 Skin Irrit. 2;H315, Skin Sens. 1;H317	[1]
Propylene glycol monomethyl ether CAS Number: 0000107-98-2	1.0 - 10	Flam. Liq. 3;H226 STOT SE 3;H336	[1][2]
Benzene, ethyl- CAS Number: 0000100-41-4	1.0 - 10	Flam. Liq. 2;H225 Acute Tox. 4;H332	[1][2]
Quartz CAS Number: 0014808-60-7	1.0 - 10	Acute Tox. 4;H332 STOT RE 2;H373	[1][2]

[1] Substance classified with a health or environmental hazard.
[2] Substance with a workplace exposure limit.
[3] PBT-substance or vPvB-substance.

*The full texts of the phrases are shown in Section 16.

4. First aid measures

4.1. Description of first aid measures

General	Remove contaminated clothing and shoes. Get medical attention immediately. Wash clothing before reuse. Thoroughly clean or destroy contaminated shoes.
Inhalation	If inhaled, remove to fresh air. If not breathing, give artificial respiration. If breathing is difficult, give oxygen. Get medical attention immediately.
Eyes	In case of contact, immediately flush eyes with plenty of water for at least 15 minutes. Get medical attention immediately.
Skin	In case of contact, immediately flush skin with soap and plenty of water. Get medical attention immediately.
Ingestion	If swallowed, immediately contact Poison Control Center at 1-800-854-6813. DO NOT induce vomiting unless instructed to do so by medical personnel. Never give anything by mouth to an unconscious person.

4.2. Most important symptoms and effects, both acute and delayed

Overview	NOTICE: Reports have associated repeated and prolonged occupational overexposure to solvents with permanent brain and nervous system damage. Intentional misuse by deliberately concentrating and inhaling the contents may be harmful or fatal. Avoid contact with eyes, skin and clothing. This product may contain trace amounts of Benzene. The IARC monographs (vol.29) state that there is sufficient evidence for the carcinogenicity in humans and limited evidence for the carcinogenicity in animals. Benzene is also listed in the NTP Annual Report on Carcinogens and in the OSHA Subpart Z table (Specifically Regulated Substances).
Inhalation	Harmful if inhaled. Causes nose and throat irritation. Vapors may affect the brain or nervous system causing dizziness, headache or nausea.
Eyes	Causes severe eye irritation. Avoid contact with eyes.
Skin	Causes skin irritation. May cause allergic skin reaction. May be harmful if absorbed through the skin.
Ingestion	Harmful if swallowed. May cause abdominal pain, nausea, vomiting, diarrhea, or drowsiness.
Chronic effects	Possible cancer hazard. Contains an ingredient which may cause cancer based on animal data (See Section 2 and Section 15 for each ingredient). Risk of cancer depends on duration and level of exposure.

5. Fire-fighting measures

5.1. Extinguishing media

CAUTION: This product has a very low flashpoint. Use of water spray when fighting fire may be inefficient. CAUTION: For mixtures containing alcohol or polar solvent, alcohol-resistant foam may be more effective. SMALL FIRES: Use dry chemical, CO_2, water spray or regular foam. LARGE FIRES: Use water spray, fog, or regular foam. Do not use straight streams. Move containers from fire area if you can do so without risk.

5.2. Special hazards arising from the substance or mixture

HIGHLY FLAMMABLE MATERIALS: Will be easily ignited by heat, sparks or flames. Vapors may form explosive mixtures with air. Vapors may travel to source of ignition and flash back. Most vapors are heavier than air. They will spread along ground and collect in low or confined areas (sewers, basements, tanks) creating a vapor explosion hazard. Runoff to sewers may create fire or explosion hazard. Containers may explode when heated. Many liquids are lighter than water.

5.3. Advice for fire-fighters

Cool closed containers exposed to fire by spraying them with water. Do not allow run off water and contaminants from fire fighting to enter drains or water courses.

ERG Guide No. 128

6. Accidental release measures

6.1. Personal precautions, protective equipment and emergency procedures

ELIMINATE ALL IGNITION SOURCES (no smoking, flares, sparks or flames in immediate area). Use only non-sparking equipment to handle spilled material and absorbent. Do not touch or walk through spilled material. Stop leak if you can do so without risk. Prevent entry into waterways, sewers, basements or confined areas. A vapor suppressing foam may be used to reduce vapors. Absorb or cover with dry earth, sand, or other non-combustible material and transfer to containers. Use non-sparking tools to collect absorbed material.

6.2. Environmental precautions

Do not allow spills to enter drains or watercourses.

6.3. Methods and material for containment and cleaning up

CALL CHEMTREC at (800)-424-9300 for emergency response. Isolate spill or leak area immediately for at

least 50 meters (150 feet) in all directions. Keep unauthorized personnel away. Stay upwind. Keep out of low areas. Ventilate closed spaces before entering. LARGE SPILLS: Consider initial downwind evacuation for at least 300 meters (1000 feet).

7. Handling and storage

7.1. Precautions for safe handling

Handling

Vapors may cause flash fire or ignite explosively.

In Storage

Keep away from heat, sparks and flame.

7.2. Conditions for safe storage, including any incompatibilities

Store between 40-100F (4-38C).

Avoid contact with eyes, skin and clothing.

Strong oxidizing agents.

Do not smoke. Extinguish all flames and pilot lights, and turn off stoves, heaters, electric motors and other sources of ignition during use and until all vapors are gone.

7.3. Specific end use(s)

Close container after each use.

Wash thoroughly after handling.

Prevent build-up of vapors by opening all windows and doors to achieve cross-ventilation.

8. Exposure controls and personal protection

8.1. Control parameters

Exposure

CAS No.	Ingredient	Source	Value
0000100-41-4	Benzene, ethyl-	OSHA	100 ppm TWA; 435 mg/m3 TWA125 ppm STEL; 545 mg/m3 STEL
		ACGIH	20 ppm TWA
		NIOSH	100 ppm TWA; 435 mg/m3 TWA125 ppm STEL; 545 mg/m3 STEL800 ppm IDLH (10% LEL)
		Supplier	No Established Limit
		OHSA, CAN	20 ppm TWA
		Mexico	100 ppm TWA LMPE-PPT; 435 mg/m3 TWA LMPE-PPT125 ppm STEL [LMPE-CT]; 545 mg/m3 STEL [LMPE-CT]
		Brazil	78 ppm TWA LT; 340 mg/m3 TWA LT
0000107-98-2	Propylene glycol monomethyl ether	OSHA	150 ppm STEL; 540 mg/m3 STEL
		ACGIH	50 ppm TWA100 ppm STEL
		NIOSH	100 ppm TWA; 360 mg/m3 TWA150 ppm STEL; 540 mg/m3 STEL
		Supplier	No Established Limit
		OHSA, CAN	100 ppm TWA150 ppm STEL
		Mexico	No Established Limit
		Brazil	No Established Limit
0001330-20-7	Xylenes (o-, m-, p- isomers)	OSHA	100 ppm TWA; 435 mg/m3 TWA150 ppm STEL; 655 mg/m3 STEL
		ACGIH	100 ppm TWA150 ppm STEL
		NIOSH	No Established Limit
		Supplier	No Established Limit
		OHSA, CAN	100 ppm TWA150 ppm STEL
		Mexico	100 ppm TWA LMPE-PPT; 435 mg/m3 TWA

			LMPE-PPT150 ppm STEL [LMPE-CT]; 655 mg/m3 STEL [LMPE-CT]
		Brazil	78 ppm TWA LT; 340 mg/m3 TWA LT
0013463-67-7	Titanium dioxide	OSHA	15 mg/m3 TWA (total dust)
		ACGIH	10 mg/m3 TWA
		NIOSH	5000 mg/m3 IDLH
		Supplier	No Established Limit
		OHSA, CAN	10 mg/m3 TWA
		Mexico	10 mg/m3 TWA LMPE-PPT (as Ti)20 mg/m3 STEL [LMPE-CT] (as Ti)
		Brazil	No Established Limit
0014807-96-6	Talc	OSHA	No Established Limit
		ACGIH	2 mg/m3 TWA (particulate matter containing no asbestos and
		NIOSH	2 mg/m3 TWA (containing no Asbestos and
		Supplier	No Established Limit
		OHSA, CAN	2 mg/m3 TWA (containing no Asbestos and
		Mexico	2 mg/m3 TWA LMPE-PPT (respirable fraction)
		Brazil	No Established Limit
0014808-60-7	Quartz	OSHA	No Established Limit
		ACGIH	0.025 mg/m3 TWA (respirable fraction)
		NIOSH	0.05 mg/m3 TWA (respirable dust)50 mg/m3 IDLH (respirable dust)
		Supplier	No Established Limit
		OHSA, CAN	0.10 mg/m3 TWA (designated substances regulation, respirable, listed under Silica, crystalline)0.10 mg/m3 TWA (respirable fraction, listed under Silica, crystalline)
		Mexico	0.1 mg/m3 TWA LMPE-PPT (respirable fraction)
		Brazil	No Established Limit
0025036-25-3	Polymer of epoxy resin and bisphenol A	OSHA	No Established Limit
		ACGIH	No Established Limit
		NIOSH	No Established Limit
		Supplier	No Established Limit
		OHSA, CAN	No Established Limit
		Mexico	No Established Limit
		Brazil	No Established Limit
0025068-38-6	Bisphenol A - Epichlorohydrin	OSHA	No Established Limit
		ACGIH	No Established Limit
		NIOSH	No Established Limit
		Supplier	No Established Limit
		OHSA, CAN	No Established Limit
		Mexico	No Established Limit
		Brazil	No Established Limit

Health Data

CAS No.	Ingredient	Source	Value
0000100-41-4	Benzene, ethyl-	NIOSH	Eye skin
0000107-98-2	Propylene glycol monomethyl ether	NIOSH	Eye nose
0001330-20-7	Xylenes (o-, m-, p- isomers)	NIOSH	Central nervous system depressant; respiratory and eye irritation
0013463-67-7	Titanium dioxide	NIOSH	Lung tumors in animals
0014807-96-6	Talc	NIOSH	(containing asbestos); Fibrotic pneumoconiosis; (containing no asbestos); Nonmalignant respiratory effects

0014808-60-7	Quartz	NIOSH	Chronic lung disease (silicosis)
0025036-25-3	Polymer of epoxy resin and bisphenol A	NIOSH	No Established Limit
0025068-38-6	Bisphenol A - Epichlorohydrin	NIOSH	No Established Limit

Carcinogen Data

CAS No.	Ingredient	Source	Value
0000100-41-4	Benzene, ethyl-	OSHA	Select Carcinogen: Yes
		NTP	Known: No; Suspected: No
		IARC	Group 1: No; Group 2a: No; Group 2b: Yes; Group 3: No; Group 4: No;
0000107-98-2	Propylene glycol monomethyl ether	OSHA	Select Carcinogen: No
		NTP	Known: No; Suspected: No
		IARC	Group 1: No; Group 2a: No; Group 2b: No; Group 3: No; Group 4: No;
0001330-20-7	Xylenes (o-, m-, p-isomers)	OSHA	Select Carcinogen: No
		NTP	Known: No; Suspected: No
		IARC	Group 1: No; Group 2a: No; Group 2b: No; Group 3: Yes; Group 4: No;
0013463-67-7	Titanium dioxide	OSHA	Select Carcinogen: Yes
		NTP	Known: No; Suspected: No
		IARC	Group 1: No; Group 2a: No; Group 2b: Yes; Group 3: No; Group 4: No;
0014807-96-6	Talc	OSHA	Select Carcinogen: No
		NTP	Known: No; Suspected: No
		IARC	Group 1: No; Group 2a: No; Group 2b: No; Group 3: Yes; Group 4: No;
0014808-60-7	Quartz	OSHA	Select Carcinogen: Yes
		NTP	Known: Yes; Suspected: No
		IARC	Group 1: Yes; Group 2a: No; Group 2b: No; Group 3: No; Group 4: No;
0025036-25-3	Polymer of epoxy resin and bisphenol A	OSHA	Select Carcinogen: No
		NTP	Known: No; Suspected: No
		IARC	Group 1: No; Group 2a: No; Group 2b: No; Group 3: No; Group 4: No;
0025068-38-6	Bisphenol A - Epichlorohydrin	OSHA	Select Carcinogen: No
		NTP	Known: No; Suspected: No
		IARC	Group 1: No; Group 2a: No; Group 2b: No; Group 3: No; Group 4: No;

8.2. Exposure controls

Respiratory: Select equipment to provide protection from the ingredients listed in Section 3 of this document. Ensure fresh air entry during application and drying. If you experience eye watering, headache or dizziness or if air monitoring demonstrates dust, vapor, or mist levels are above applicable limits, wear an appropriate, properly fitted respirator (NIOSH approved) during and after application. Follow respirator manufacturer's directions for respirator use. FOR USERS OF 3M RESPIRATORY PROTECTION ONLY: For information and assistance on 3M occupational health and safety products, call OH&ESD Technical Service toll free in U.S.A. 1-800-243-4630, in Canada call 1-800-267-4414. Please do not contact these numbers regarding other manufacturer's respiratory protection products. 3M does not endorse the accuracy of the information contained in this Material Safety Data Sheet.

Eyes: Avoid contact with eyes. Protective equipment should be selected to provide protection from exposure to the chemicals listed in Section 3 of this document. Depending on the site-specific conditions of use, safety glasses, chemical goggles, and/or head and face protection may be required to prevent contact. The equipment must be thoroughly cleaned, or discarded after each use.

Skin: Protective equipment should be selected to provide protection from exposure to the chemicals listed in Section 3 of this document. Depending on the site-specific conditions of use, protective gloves, apron, boots, head and face protection may be required to prevent contact. The equipment must be thoroughly cleaned, or discarded after each use.

Engineering Controls: Depending on the site-specific conditions of use, provide adequate ventilation.

Other Work Practices	Emergency eye wash fountains and safety showers should be available in the immediate vicinity of any potential exposure. Use good personal hygiene practices. Wash hands before eating, drinking, using toilet facilities, etc. Promptly remove soiled clothing and wash clothing thoroughly before reuse. Shower after work using plenty of soap and water.

9. Physical and chemical properties

Appearance	Coloured Liquid
Odour threshold	Not Measured
pH	No Established Limit
Melting point / freezing point	Not Measured
Initial boiling point and boiling range	117 (C) 243 (F)
Flash Point	36 (C) 97 (F)
Evaporation rate (Ether = 1)	Not Measured
Flammability (solid, gas)	Not Applicable
Upper/lower flammability or explosive limits	Lower Explosive Limit: 1
	Upper Explosive Limit: No Established Limit
vapor pressure (Pa)	Not Measured
Vapor Density	Heavier than air
Specific Gravity	1.69
Partition coefficient n-octanol/water (Log Kow)	Not Measured
Auto-ignition temperature	Not Measured
Decomposition temperature	Not Measured
Viscosity (cSt)	No Established Limit
VOC %	Refer to the Technical Data Sheet or label where information is available.

9.2. Other information

No further information

10. Stability and reactivity

10.1. Reactivity

No data available

10.2. Chemical stability

This product is stable and hazardous polymerization will not occur. Not sensitive to mechanical impact. Excessive heat and fumes generation can occur if improperly handled.

10.3. Possibility of hazardous reactions

No data available

10.4. Conditions to avoid

No data available

10.5. Incompatible materials

Strong oxidizing agents.

10.6. Hazardous decomposition products

HIGHLY FLAMMABLE MATERIALS: Will be easily ignited by heat, sparks or flames. Vapors may form explosive mixtures with air. Vapors may travel to source of ignition and flash back. Most vapors are heavier than air. They will spread along ground and collect in low or confined areas (sewers, basements, tanks) creating a vapor explosion hazard. Runoff to sewers may create fire or explosion hazard. Containers may explode when heated. Many liquids are lighter than water.

11. Toxicological information

Acute toxicity

NOTICE: Reports have associated repeated and prolonged occupational overexposure to solvents with permanent brain and nervous system damage. Intentional misuse by deliberately concentrating and inhaling the contents may be harmful or fatal.

Ingredient	Oral LD50, mg/kg	Skin LD50, mg/kg	Inhalation Vapor LD50, mg/L/4hr	Inhalation Dust/Mist LD50, mg/L/4hr
Talc - (14807-96-6)	No data available	No data available	No data available	No data available
Bisphenol A - Epichlorohydrin - (25068-38-6)	2,000.00, Rat - Category: 4	2,000.00, Rabbit - Category: 4	No data available	No data available
Xylenes (o-, m-, p- isomers) - (1330-20-7)	4,299.00, Rat - Category: 5	1,548.00, Rabbit - Category: 4	20.00, Rat - Category: 4	No data available
Titanium dioxide - (13463-67-7)	10,000.00, Rat - Category: NA	10,000.00, Rabbit - Category: NA	No data available	6.82, Rat - Category: NA
Polymer of epoxy resin and bisphenol A - (25036-25-3)	No data available	No data available	No data available	No data available
Propylene glycol monomethyl ether - (107-98-2)	5,000.00, Rat - Category: 5	13,000.00, Rabbit - Category: NA	No data available	No data available
Benzene, ethyl- - (100-41-4)	3,500.00, Rat - Category: 5	15,433.00, Rabbit - Category: NA	17.20, Rat - Category: 4	No data available
Quartz - (14808-60-7)	No data available	No data available	No data available	No data available

Item	Category	Hazard
Acute Toxicity (mouth)	Not Classified	Not Applicable
Acute Toxicity (skin)	5	May be harmful in contact with skin.
Acute Toxicity (inhalation)	Not Classified	Not Applicable
Skin corrosion/irritation	2	Causes skin irritation.
Eye damage/irritation	2	Causes serious eye irritation.
Sensitization (respiratory)	Not Classified	Not Applicable
Sensitization (skin)	1	May cause an allergic skin reaction.
Germ toxicity	Not Classified	Not Applicable
Carcinogenicity	Not Classified	Not Applicable
Reproductive Toxicity	Not Classified	Not Applicable
Specific target organ systemic toxicity (single exposure)	Not Classified	Not Applicable
Specific target organ systemic Toxicity (repeated exposure)	Not Classified	Not Applicable
Aspiration hazard	Not Classified	Not Applicable

12. Ecological information

12.1. Toxicity

No additional information provided for this product. See Section 3 for chemical specific data.

Aquatic Ecotoxicity

Ingredient	96 hr LC50 fish, mg/l	48 hr EC50 crustacea, mg/l	ErC50 algae, mg/l
Talc - (14807-96-6)	Not Available	Not Available	Not Available
Bisphenol A - Epichlorohydrin - (25068-38-6)	3.10, Pimephales promelas	1.40, Daphnia magna	Not Available
Xylenes (o-, m-, p- isomers) - (1330-20-7)	3.30, Oncorhynchus mykiss	8.50, Palaemonetes pugio	100.00 (72 hr), Chlorococcales
Titanium dioxide - (13463-67-7)	1,000.00, Fundulus heteroclitus	5.50, Daphnia magna	5.83 (72 hr), Pseudokirchneriella subcapitata

Polymer of epoxy resin and bisphenol A - (25036-25-3)	Not Available	Not Available	Not Available
Propylene glycol monomethyl ether - (107-98-2)	1,000.00, Oncorhynchus mykiss	500.00, Daphnia magna	1,000.00 (96 hr), Selenastrum capricornutum
Benzene, ethyl- - (100-41-4)	4.20, Oncorhynchus mykiss	2.93, Daphnia magna	3.60 (96 hr), Pseudokirchneriella subcapitata
Quartz - (14808-60-7)	Not Available	Not Available	Not Available

12.2. Persistence and degradability

No data available

12.3. Bioaccumulative potential

Not Measured

12.4. Mobility in soil

No data available

12.5. Results of PBT and vPvB assessment

This product contains no PBT/vPvB chemicals.

12.6. Other adverse effects

No data available

13. Disposal considerations

13.1. Waste treatment methods

Do not allow spills to enter drains or watercourses.

Dispose of in accordance with local, state and federal regulations. (Also reference RCRA information in Section 15 if listed).

14. Transport information

14.1. UN number UN 1263

14.2. UN proper shipping name PAINT

14.3. Transport hazard class(es)

DOT (Domestic Surface Transportation)

DOT Proper Shipping Name	PAINT
DOT Hazard Class	3
UN / NA Number	UN 1263
DOT Packing Group	III
CERCLA/DOT RQ	81 gal. / 1143 lbs.

IMO / IMDG (Ocean Transportation)

IMDG Proper Shipping Name	PAINT
IMDG Hazard Class	3
Sub Class	3
IMDG Packing Group	III
System Reference Code	1

14.4. Packing group III

14.5. Environmental hazards

IMDG Marine Pollutant: No

14.6. Special precautions for user

Not Applicable

14.7. Transport in bulk according to Annex II of MARPOL73/78 and the IBC Code

Not Applicable

15. Regulatory information

Regulatory Overview The regulatory data in Section 15 is not intended to be all-inclusive, only selected regulations are represented. All ingredients of this product are listed on the TSCA

(Toxic Substance Control Act) Inventory or are not required to be listed on the TSCA Inventory.

WHMIS Classification B2 D2B

DOT Marine Pollutants (10%):
(No Product Ingredients Listed)

DOT Severe Marine Pollutants (1%):
(No Product Ingredients Listed)

EPCRA 311/312 Chemicals and RQs (>.1%) :

Cyclohexanone (5000 lb final RQ; 2270 kg final RQ)

Benzene, ethyl- (1000 lb final RQ; 454 kg final RQ)

Xylenes (o-, m-, p- isomers) (100 lb final RQ; 45.4 kg final RQ)

EPCRA 302 Extremely Hazardous (>.1%) :
(No Product Ingredients Listed)

EPCRA 313 Toxic Chemicals (>.1%) :

Benzene, ethyl-

Xylenes (o-, m-, p- isomers)

Mass RTK Substances (>1%) :

Benzene, ethyl-

Propylene glycol monomethyl ether

Quartz

Talc

Titanium dioxide

Xylenes (o-, m-, p- isomers)

Penn RTK Substances (>1%) :

Benzene, ethyl-

Propylene glycol monomethyl ether

Quartz

Talc

Titanium dioxide

Xylenes (o-, m-, p- isomers)

Penn Special Hazardous Substances (>.01%) :
(No Product Ingredients Listed)

RCRA Status:
(No Product Ingredients Listed)

N.J. RTK Substances (>1%) :

Benzene, ethyl-

Propylene glycol monomethyl ether

Quartz

Talc

Titanium dioxide

Xylenes (o-, m-, p- isomers)

N.J. Special Hazardous Substances (>.01%) :

Benzene, ethyl-

Propylene glycol monomethyl ether

Quartz

Talc

Xylenes (o-, m-, p- isomers)

N.J. Env. Hazardous Substances (>.1%) :

Benzene, ethyl-

Xylenes (o-, m-, p- isomers)

Proposition 65 - Carcinogens (>0%):

Benzene

Cobalt

Benzene, ethyl-

Naphthalene

Nickel

Quartz

Titanium dioxide

Proposition 65 - Female Repro Toxins (>0%):
(No Product Ingredients Listed)

Proposition 65 - Male Repro Toxins (>0%):
Benzene

Proposition 65 - Developmental Toxins (>0%):
Benzene

16. Other information

The information and recommendations contained herein are based upon data believed to be correct. However, no guarantee or warranty of any kind, expressed or implied, is made with respect to the information contained herein. We accept no responsibility and disclaim all liability for any harmful effects which may be caused by exposure to our products. Customers/users of this product must comply with all applicable health and safety laws, regulations, and orders.

The full text of the phrases appearing in section 3 is:

H225 Highly flammable liquid and vapor.
H226 Flammable liquid and vapor.
H312 Harmful in contact with skin.
H315 Causes skin irritation.
H317 May cause an allergic skin reaction.
H319 Causes serious eye irritation.
H332 Harmful if inhaled.
H336 May cause drowsiness or dizziness.
H372 Causes damage to organs through prolonged or repeated exposure.
H373 May cause damage to organs through prolonged or repeated exposure.
H411 Toxic to aquatic life with long lasting effects.

The following sections have changed since the previous revision.

End of Document

SAFETY DATA SHEET

Version 3.7
Revision Date 03/03/2015
Print Date 07/29/2015

1. PRODUCT AND COMPANY IDENTIFICATION

1.1 Product identifiers

Product name	:	Poly(Bisphenol A-*co*-epichlorohydrin)
Product Number	:	181196
Brand	:	Aldrich
CAS-No.	:	25068-38-6

1.2 Relevant identified uses of the substance or mixture and uses advised against

Identified uses	:	Laboratory chemicals, Manufacture of substances

1.3 Details of the supplier of the safety data sheet

Company	:	Sigma-Aldrich 3050 Spruce Street SAINT LOUIS MO 63103 USA
Telephone	:	+1 800-325-5832
Fax	:	+1 800-325-5052

1.4 Emergency telephone number

Emergency Phone #	:	(314) 776-6555

2. HAZARDS IDENTIFICATION

2.1 Classification of the substance or mixture

GHS Classification in accordance with 29 CFR 1910 (OSHA HCS)
Acute toxicity, Oral (Category 4), H302
Skin corrosion (Category 1B), H314
Serious eye damage (Category 1), H318
Skin sensitisation (Category 1), H317
Carcinogenicity (Category 1B), H350
Acute aquatic toxicity (Category 2), H401
Chronic aquatic toxicity (Category 2), H411

For the full text of the H-Statements mentioned in this Section, see Section 16.

2.2 GHS Label elements, including precautionary statements

Pictogram

Signal word: Danger

Hazard statement(s)

H302	Harmful if swallowed.
H314	Causes severe skin burns and eye damage.
H317	May cause an allergic skin reaction.
H318	Causes serious eye damage.
H350	May cause cancer.
H411	Toxic to aquatic life with long lasting effects.

Precautionary statement(s)

P201	Obtain special instructions before use.

P202	Do not handle until all safety precautions have been read and understood.
P260	Do not breathe dust or mist.
P264	Wash skin thoroughly after handling.
P270	Do not eat, drink or smoke when using this product.
P272	Contaminated work clothing should not be allowed out of the workplace.
P273	Avoid release to the environment.
P280	Wear protective gloves/ protective clothing/ eye protection/ face protection.
P281	Use personal protective equipment as required.
P301 + P312 + P330	IF SWALLOWED: Call a POISON CENTER or doctor/ physician if you feel unwell. Rinse mouth.
P301 + P330 + P331	IF SWALLOWED: Rinse mouth. Do NOT induce vomiting.
P303 + P361 + P353	IF ON SKIN (or hair): Remove/ Take off immediately all contaminated clothing. Rinse skin with water/ shower.
P304 + P340 + P310	IF INHALED: Remove victim to fresh air and keep at rest in a position comfortable for breathing. Immediately call a POISON CENTER or doctor/ physician.
P305 + P351 + P338 + P310	IF IN EYES: Rinse cautiously with water for several minutes. Remove contact lenses, if present and easy to do. Continue rinsing. Immediately call a POISON CENTER or doctor/ physician.
P308 + P313	IF exposed or concerned: Get medical advice/ attention.
P333 + P313	If skin irritation or rash occurs: Get medical advice/ attention.
P363	Wash contaminated clothing before reuse.
P391	Collect spillage.
P405	Store locked up.
P501	Dispose of contents/ container to an approved waste disposal plant.

2.3 Hazards not otherwise classified (HNOC) or not covered by GHS - none

3. COMPOSITION/INFORMATION ON INGREDIENTS

3.2 Mixtures

Formula : (C15 H16 O2 . C3 H5 Cl O)x

Hazardous components

Component		Classification	Concentration
Reaction product: bisphenol-A-(epichlorhydrin) and epoxy resin (number average molecular weight <= 700)			
CAS-No. EC-No. Index-No.	25068-38-6 500-033-5 603-074-00-8	Skin Irrit. 2; Eye Irrit. 2A; Skin Sens. 1; Aquatic Acute 2; Aquatic Chronic 2; H315, H317, H319, H411	<= 100 %
Epichlorhydrin			
CAS-No. EC-No. Index-No. Registration number	106-89-8 203-439-8 603-026-00-6 01-2119457436-33-XXXX	Flam. Liq. 3; Acute Tox. 3; Skin Corr. 1B; Eye Dam. 1; Skin Sens. 1; Carc. 1B; Aquatic Acute 3; H226, H301 + H311 + H331, H314, H317, H318, H350, H402	>= 5 - < 10 %

For the full text of the H-Statements mentioned in this Section, see Section 16.

4. FIRST AID MEASURES

4.1 Description of first aid measures

General advice

Consult a physician. Show this safety data sheet to the doctor in attendance.Move out of dangerous area.

If inhaled

If breathed in, move person into fresh air. If not breathing, give artificial respiration. Consult a physician.

In case of skin contact
Take off contaminated clothing and shoes immediately. Wash off with soap and plenty of water. Consult a physician.

In case of eye contact
Rinse thoroughly with plenty of water for at least 15 minutes and consult a physician.Continue rinsing eyes during transport to hospital.

If swallowed
Do NOT induce vomiting. Never give anything by mouth to an unconscious person. Rinse mouth with water. Consult a physician.

4.2 Most important symptoms and effects, both acute and delayed
The most important known symptoms and effects are described in the labelling (see section 2.2) and/or in section 11

4.3 Indication of any immediate medical attention and special treatment needed
No data available

5. FIREFIGHTING MEASURES

5.1 Extinguishing media

Suitable extinguishing media
Use water spray, alcohol-resistant foam, dry chemical or carbon dioxide.

5.2 Special hazards arising from the substance or mixture
No data available

5.3 Advice for firefighters
Wear self-contained breathing apparatus for firefighting if necessary.

5.4 Further information
No data available

6. ACCIDENTAL RELEASE MEASURES

6.1 Personal precautions, protective equipment and emergency procedures
Use personal protective equipment. Avoid dust formation. Avoid breathing vapours, mist or gas. Ensure adequate ventilation. Evacuate personnel to safe areas. Avoid breathing dust.
For personal protection see section 8.

6.2 Environmental precautions
Prevent further leakage or spillage if safe to do so. Do not let product enter drains. Discharge into the environment must be avoided.

6.3 Methods and materials for containment and cleaning up
Pick up and arrange disposal without creating dust. Sweep up and shovel. Keep in suitable, closed containers for disposal.

6.4 Reference to other sections
For disposal see section 13.

7. HANDLING AND STORAGE

7.1 Precautions for safe handling
Avoid contact with skin and eyes. Avoid formation of dust and aerosols.Further processing of solid materials may result in the formation of combustible dusts. The potential for combustible dust formation should be taken into consideration before additional processing occurs.
Provide appropriate exhaust ventilation at places where dust is formed.
For precautions see section 2.2.

7.2 Conditions for safe storage, including any incompatibilities
Keep container tightly closed in a dry and well-ventilated place.
Storage class (TRGS 510): Non-combustible, acute toxic Cat.3 / toxic hazardous materials or hazardous materials causing chronic effects

7.3 Specific end use(s)
Apart from the uses mentioned in section 1.2 no other specific uses are stipulated

8. EXPOSURE CONTROLS/PERSONAL PROTECTION

8.1 Control parameters

Components with workplace control parameters

Component	CAS-No.	Value	Control parameters	Basis
Epichlorhydrin	106-89-8	TWA	0.500000 ppm	USA. ACGIH Threshold Limit Values (TLV)
	Remarks	Upper Respiratory Tract irritation Male reproductive Confirmed animal carcinogen with unknown relevance to humans Danger of cutaneous absorption		
		Potential Occupational Carcinogen See Appendix A		
		TWA	5.000000 ppm 19.000000 mg/m3	USA. Occupational Exposure Limits (OSHA) - Table Z-1 Limits for Air Contaminants
		Skin designation The value in mg/m3 is approximate.		

8.2 Exposure controls

Appropriate engineering controls
Handle in accordance with good industrial hygiene and safety practice. Wash hands before breaks and at the end of workday.

Personal protective equipment

Eye/face protection
Face shield and safety glasses Use equipment for eye protection tested and approved under appropriate government standards such as NIOSH (US) or EN 166(EU).

Skin protection
Handle with gloves. Gloves must be inspected prior to use. Use proper glove removal technique (without touching glove's outer surface) to avoid skin contact with this product. Dispose of contaminated gloves after use in accordance with applicable laws and good laboratory practices. Wash and dry hands.

Body Protection
Complete suit protecting against chemicals, The type of protective equipment must be selected according to the concentration and amount of the dangerous substance at the specific workplace.

Respiratory protection
Where risk assessment shows air-purifying respirators are appropriate use a full-face particle respirator type N100 (US) or type P3 (EN 143) respirator cartridges as a backup to engineering controls. If the respirator is the sole means of protection, use a full-face supplied air respirator. Use respirators and components tested and approved under appropriate government standards such as NIOSH (US) or CEN (EU).

Control of environmental exposure
Prevent further leakage or spillage if safe to do so. Do not let product enter drains. Discharge into the environment must be avoided.

9. PHYSICAL AND CHEMICAL PROPERTIES

9.1 Information on basic physical and chemical properties

a)	Appearance	Form: pellets
b)	Odour	No data available
c)	Odour Threshold	No data available
d)	pH	No data available
e)	Melting point/freezing point	No data available
f)	Initial boiling point and	No data available

	boiling range	
g)	Flash point	No data available
h)	Evaporation rate	No data available
i)	Flammability (solid, gas)	No data available
j)	Upper/lower flammability or explosive limits	No data available
k)	Vapour pressure	No data available
l)	Vapour density	No data available
m)	Relative density	1.18 g/mL at 25 °C (77 °F)
n)	Water solubility	No data available
o)	Partition coefficient: n-octanol/water	No data available
p)	Auto-ignition temperature	No data available
q)	Decomposition temperature	No data available
r)	Viscosity	No data available
s)	Explosive properties	No data available
t)	Oxidizing properties	No data available

9.2 Other safety information
No data available

10. STABILITY AND REACTIVITY

10.1 Reactivity
No data available

10.2 Chemical stability
Stable under recommended storage conditions.

10.3 Possibility of hazardous reactions
No data available

10.4 Conditions to avoid
No data available

10.5 Incompatible materials
No data available

10.6 Hazardous decomposition products
Other decomposition products - No data available
In the event of fire: see section 5

11. TOXICOLOGICAL INFORMATION

11.1 Information on toxicological effects

Acute toxicity
LD50 Oral - Rat - 13,600 mg/kg
Remarks: Behavioral:Somnolence (general depressed activity). Lungs, Thorax, or Respiration:Dyspnea. Nutritional and Gross Metabolic:Weight loss or decreased weight gain.

Inhalation: No data available

Dermal: No data available

Skin corrosion/irritation
No data available

Serious eye damage/eye irritation
No data available

Respiratory or skin sensitisation
Germ cell mutagenicity
No data available

Ames test
Result: positive

Carcinogenicity

IARC:	2A - Group 2A: Probably carcinogenic to humans (Epichlorhydrin)
NTP:	Reasonably anticipated to be a human carcinogen (Epichlorhydrin)
OSHA:	No component of this product present at levels greater than or equal to 0.1% is identified as a carcinogen or potential carcinogen by OSHA.

Reproductive toxicity
No data available

No data available

Specific target organ toxicity - single exposure
No data available

Specific target organ toxicity - repeated exposure
No data available

Aspiration hazard
No data available

Additional Information
RTECS: Not available

Stomach - Irregularities - Based on Human Evidence
Stomach - Irregularities - Based on Human Evidence (Epichlorhydrin)

12. ECOLOGICAL INFORMATION

12.1 Toxicity
No data available

12.2 Persistence and degradability

Biodegradability	Result: - According to the results of tests of biodegradability this product is not readily biodegradable. Remarks: No data available

12.3 Bioaccumulative potential
No data available

12.4 Mobility in soil
No data available

12.5 Results of PBT and vPvB assessment
PBT/vPvB assessment not available as chemical safety assessment not required/not conducted

12.6 Other adverse effects
An environmental hazard cannot be excluded in the event of unprofessional handling or disposal.
Toxic to aquatic life with long lasting effects.

No data available

13. DISPOSAL CONSIDERATIONS

13.1 Waste treatment methods

Product
Offer surplus and non-recyclable solutions to a licensed disposal company. Contact a licensed professional waste disposal service to dispose of this material. Dissolve or mix the material with a combustible solvent and burn in a chemical incinerator equipped with an afterburner and scrubber.

Contaminated packaging
Dispose of as unused product.

14. TRANSPORT INFORMATION

DOT (US)
Not dangerous goods

IMDG
UN number: 3077 Class: 9 Packing group: III EMS-No: F-A, S-F
Proper shipping name: ENVIRONMENTALLY HAZARDOUS SUBSTANCE, SOLID, N.O.S. (Reaction product: bisphenol-A-(epichlorhydrin) and epoxy resin (number average molecular weight <= 700))
Marine pollutant:yes

IATA
UN number: 3077 Class: 9 Packing group: III
Proper shipping name: Environmentally hazardous substance, solid, n.o.s. (Reaction product: bisphenol-A-(epichlorhydrin) and epoxy resin (number average molecular weight <= 700))

Further information
EHS-Mark required (ADR 2.2.9.1.10, IMDG code 2.10.3) for single packagings and combination packagings containing inner packagings with Dangerous Goods > 5L for liquids or > 5kg for solids.

15. REGULATORY INFORMATION

SARA 302 Components
The following components are subject to reporting levels established by SARA Title III, Section 302:

	CAS-No.	Revision Date
Epichlorhydrin	106-89-8	2008-11-03

SARA 313 Components
The following components are subject to reporting levels established by SARA Title III, Section 313:

	CAS-No.	Revision Date
Epichlorhydrin	106-89-8	2008-11-03

SARA 311/312 Hazards
Acute Health Hazard, Chronic Health Hazard

Massachusetts Right To Know Components

	CAS-No.	Revision Date
Epichlorhydrin	106-89-8	2008-11-03

Pennsylvania Right To Know Components

	CAS-No.	Revision Date
Reaction product: bisphenol-A-(epichlorhydrin) and epoxy resin (number average molecular weight <= 700)	25068-38-6	
Epichlorhydrin	106-89-8	2008-11-03

New Jersey Right To Know Components

	CAS-No.	Revision Date
Reaction product: bisphenol-A-(epichlorhydrin) and epoxy resin (number average molecular weight <= 700)	25068-38-6	
Epichlorhydrin	106-89-8	2008-11-03

California Prop. 65 Components

WARNING! This product contains a chemical known to the	CAS-No.	Revision Date

State of California to cause cancer. Epichlorhydrin	106-89-8	2007-09-28

WARNING: This product contains a chemical known to the State of California to cause birth defects or other reproductive harm. Epichlorhydrin	CAS-No. 106-89-8	Revision Date 2007-09-28

16. OTHER INFORMATION

Full text of H-Statements referred to under sections 2 and 3.

Acute Tox.	Acute toxicity
Aquatic Acute	Acute aquatic toxicity
Aquatic Chronic	Chronic aquatic toxicity
Carc.	Carcinogenicity
Eye Dam.	Serious eye damage
Eye Irrit.	Eye irritation
Flam. Liq.	Flammable liquids
H226	Flammable liquid and vapour.
H301 + H311 + H331	Toxic if swallowed, in contact with skin or if inhaled
H302	Harmful if swallowed.
H314	Causes severe skin burns and eye damage.
H315	Causes skin irritation.
H317	May cause an allergic skin reaction.
H318	Causes serious eye damage.
H319	Causes serious eye irritation.
H350	May cause cancer.
H401	Toxic to aquatic life.
H402	Harmful to aquatic life.
H411	Toxic to aquatic life with long lasting effects.
Skin Corr.	Skin corrosion
Skin Irrit.	Skin irritation
Skin Sens.	Skin sensitisation

HMIS Rating

Health hazard:	2
Chronic Health Hazard:	*
Flammability:	0
Physical Hazard	0

NFPA Rating

Health hazard:	3
Fire Hazard:	0
Reactivity Hazard:	0

Further information

Copyright 2015 Sigma-Aldrich Co. LLC. License granted to make unlimited paper copies for internal use only.
The above information is believed to be correct but does not purport to be all inclusive and shall be used only as a guide. The information in this document is based on the present state of our knowledge and is applicable to the product with regard to appropriate safety precautions. It does not represent any guarantee of the properties of the product. Sigma-Aldrich Corporation and its Affiliates shall not be held liable for any damage resulting from handling or from contact with the above product. See www.sigma-aldrich.com and/or the reverse side of invoice or packing slip for additional terms and conditions of sale.

Preparation Information
Sigma-Aldrich Corporation
Product Safety – Americas Region
1-800-521-8956

Version: 3.7 Revision Date: 03/03/2015 Print Date: 07/29/2015